# MISSOURI HIGHWAYS AND TRANSPORTATION COMMISSION
# PLANS FOR PROPOSED
# STATE HIGHWAY

## JACKSON COUNTY

### DESIGN DESIGNATION

A.A.D.T. - 2013 = 69700
A.A.D.T. - 2033 = 94000
T = 7.5%
V = 45 M.P.H.

FUNCTIONAL CLASSIFICATION - INTERSTATE

NO RIGHT-OF-WAY
TO BE ACQUIRED

PROJECT LIMITS
GRADING, PAVING, BRIDGE REDECK, LIGHTING, AND SIGNING

(NTS)

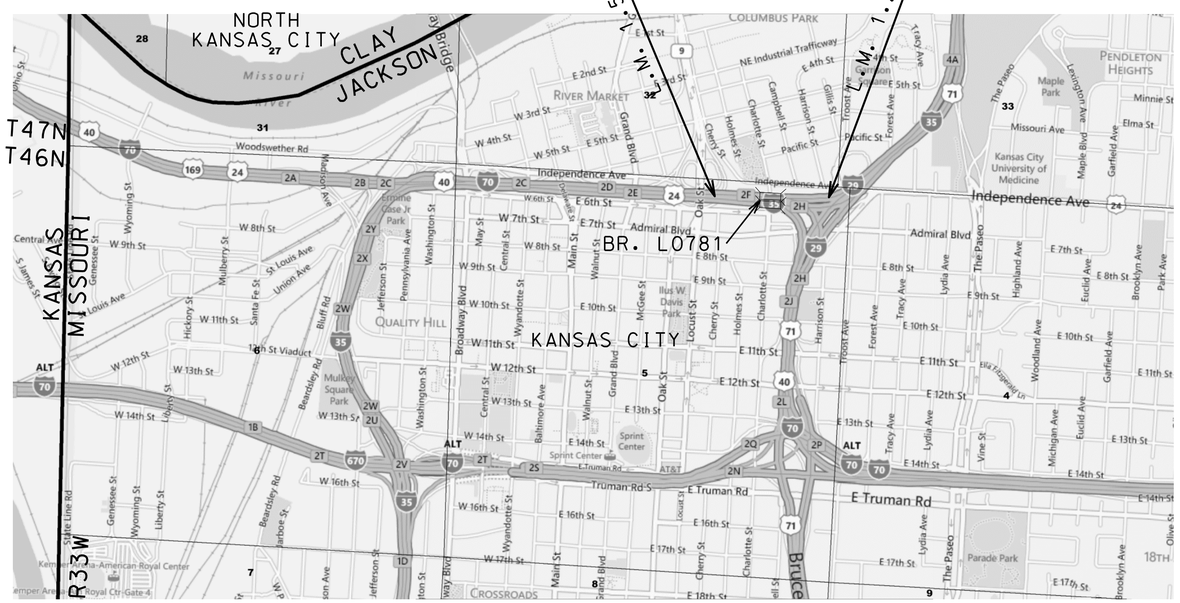


### CONVENTIONAL SYMBOLS
(USED IN PLANS)

| | EXISTING | NEW |
|---|---|---|
| BUILDINGS AND STRUCTURES | | |
| GUARD RAIL | | |
| CONCRETE RIGHT-OF-WAY MARKER | | |
| STEEL RIGHT-OF-WAY MARKER | | |
| LOCATION SURVEY MARKER | | |
| UTILITIES | | |
| FIBER OPTICS | —FO— | —FO— |
| OVERHEAD TELEPHONE | —○— | —●— |
| UNDERGROUND TELEPHONE | —T— | —T— |
| OVERHEAD POWER | —□— | —■— |
| UNDERGROUND POWER | —P— | —P— |
| GAS | —G— | —G— |
| WATER | —W— | —W— |
| MANHOLE | SAN | |
| FIRE HYDRANT | HYD | |
| WATER VALVE | WV | |
| WATER METER | WM | |
| DROP INLET | DI | |
| DITCH BLOCK | | |
| GROUND MOUNTED SIGN | SIGN | |
| LIGHT POLE | | |
| H-FRAME POWER POLE | | |
| TELEPHONE PEDESTAL | PED | |
| FENCE | | |
| CHAIN LINK | —V— | |
| WOVEN WIRE | —X— | |
| GATE POST | | |
| BENCHMARK | BM | |

NOTE: DASHED OR OPEN SYMBOLS INDICATE EXISTING FEATURES

### INDEX OF SHEETS


| DESCRIPTION | SHEET NUMBER |
|---|---|
| TITLE SHEET | 1 |
| TYPICAL SECTIONS (TS) (3 SHEETS) | 2 |
| QUANTITIES (QU) (3 SHEETS) | 3 |
| PLAN-PROFILE (PP) | 4 |
| RIGHT OF WAY (RW) | N/A |
| REFERENCE POINTS (RP) | 5 |
| COORDINATE POINTS (CP) | 6 |
| SPECIAL SHEETS (SS) | 7-25 |
| TRAFFIC CONTROL SHEETS (TC) | 26-73 |
| EROSION CONTROL SHEETS (EC) | 74 |
| LIGHTING (LT) | SEE 4 |
| SIGNALS (SG) | N/A |
| SIGNING (SN) | 75-83 |
| PAVEMENT MARKING (PM) | 84 |
| CULVERT SECTIONS (CS) | N/A |
| BRIDGE DRAWINGS (B) | |
| L07816 | 1-18 |
| L07817 | 1-17 |
| A#### | N/A |
| A#### | N/A |
| CROSS SECTIONS (XS) | N/A |


### LENGTH OF PROJECT

| | |
|---|---|
| BEGINNING OF PROJECT | L.M. 1.246 (I-35SB) |
| END OF PROJECT | L.M. 1.542 (I-35SB) |
| APPARENT LENGTH | 1562.88 FEET |
| EQUATIONS AND EXCEPTIONS: | N/A |
| TOTAL CORRECTIONS | 0.00 FEET |
| NET LENGTH OF PROJECT | 1562.88 FEET |
| STATE LENGTH | 0.296 MILES |

"THIS MEDIA SHOULD NOT BE CONSIDERED A CERTIFIED DOCUMENT."

| | |
|---|---|
| DATE PREPARED | 1/18/2013 |
| ROUTE | 35 |
| STATE | MO |
| DISTRICT | KC |
| SHEET NO. | 1 |
| COUNTY | JACKSON |
| JOB NO. | J4I2371 |
| CONTRACT ID. | |
| PROJECT NO. | |
| BRIDGE NO. | L07816, L07817 |

DESCRIPTION
DATE

MISSOURI HIGHWAYS AND TRANSPORTATION COMMISSION
105 WEST CAPITOL
JEFFERSON CITY, MO 65102
1-888-ASK-MODOT (1-888-275-6636)

IF A SEAL IS PRESENT ON THIS SHEET IT HAS BEEN ELECTRONICALLY SEALED AND DATED.

REV.

ESTIMATE FACTORS:
FOR ESTIMATE PURPOSES ONLY

SP125BSM - 2.301 TONS/CUYD
SP125C - 1.990 TONS/CUYD
SP250C - 2.007 TONS/CUYD
TACK COAT - 0.1 GAL/SQYD

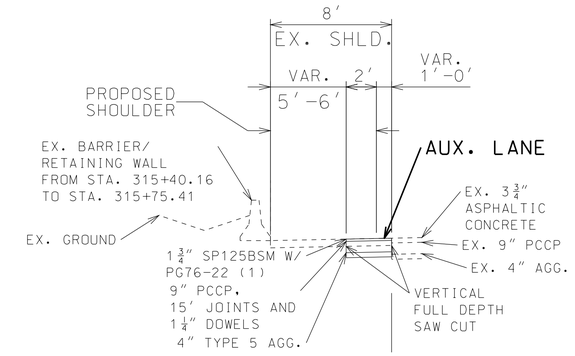


STA. 315+35.41 TO 315+75.41

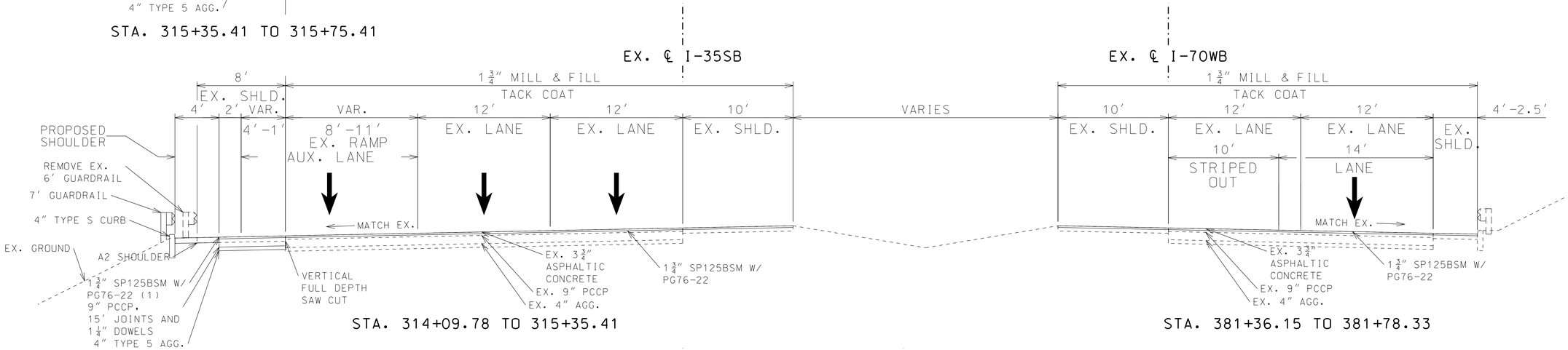


STA. 314+09.78 TO 315+35.41

STA. 381+36.15 TO 381+78.33

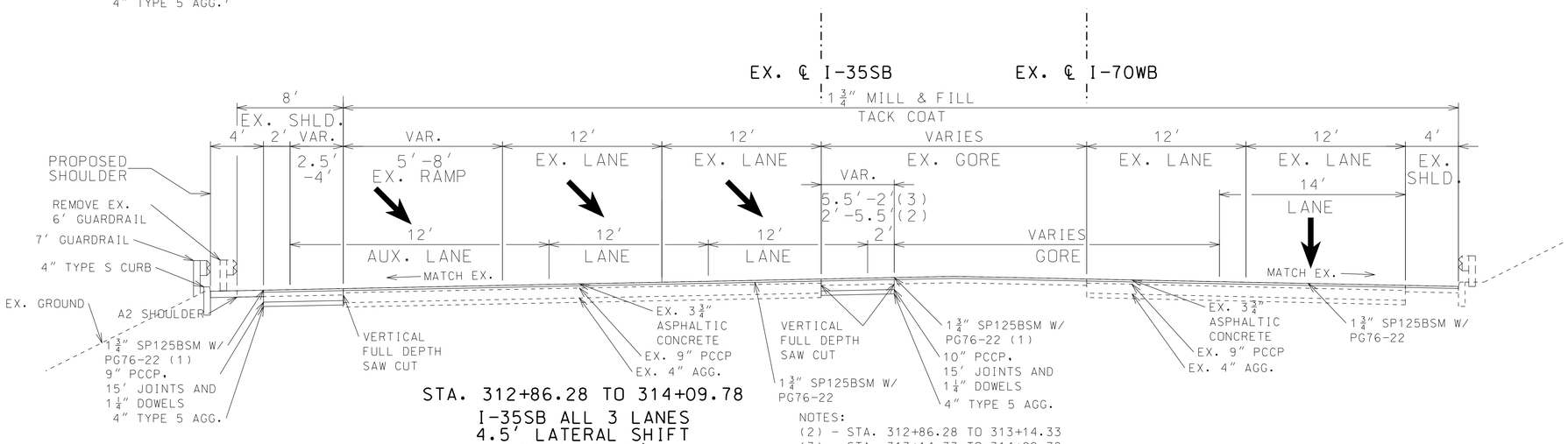


STA. 312+86.28 TO 314+09.78

I-35SB ALL 3 LANES
4.5' LATERAL SHIFT
OVER 123.5'
(330' LANE SHIFT TOTAL)

NOTES:
(2) - STA. 312+86.28 TO 313+14.33
(3) - STA. 313+14.33 TO 314+09.78

NOTES:
(1) - BONDED ASPHALTIC CONCRETE SEE JSP'S FOR DETAILS
NO S.E. CORRECTION.

TYPICAL SECTION
SHEET 1 OF 3

"THIS MEDIA SHOULD NOT BE CONSIDERED A CERTIFIED DOCUMENT."

| | |
|---|---|
| DATE PREPARED | 12/13/2012 |
| ROUTE | 35/70 |
| STATE | MO |
| DISTRICT | KC |
| SHEET NO. | 2 |
| COUNTY | JACKSON |
| JOB NO. | J4I2371 |
| CONTRACT ID. | |
| PROJECT NO. | |
| BRIDGE NO. | L07816, L07817 |

DESCRIPTION

DATE

MISSOURI HIGHWAYS AND TRANSPORTATION COMMISSION
105 WEST CAPITOL
JEFFERSON CITY, MO 65102
1-888-ASK-MODOT (1-888-275-6636)

IF A SEAL IS PRESENT ON THIS SHEET IT HAS BEEN ELECTRONICALLY SEALED AND DATED.

ESTIMATE FACTORS:
FOR ESTIMATE PURPOSES ONLY

SP125BSM - 2.301 TONS/CUYD
SP125C - 1.990 TONS/CUYD
SP250C - 2.007 TONS/CUYD
TACK COAT - 0.1 GAL/SQYD

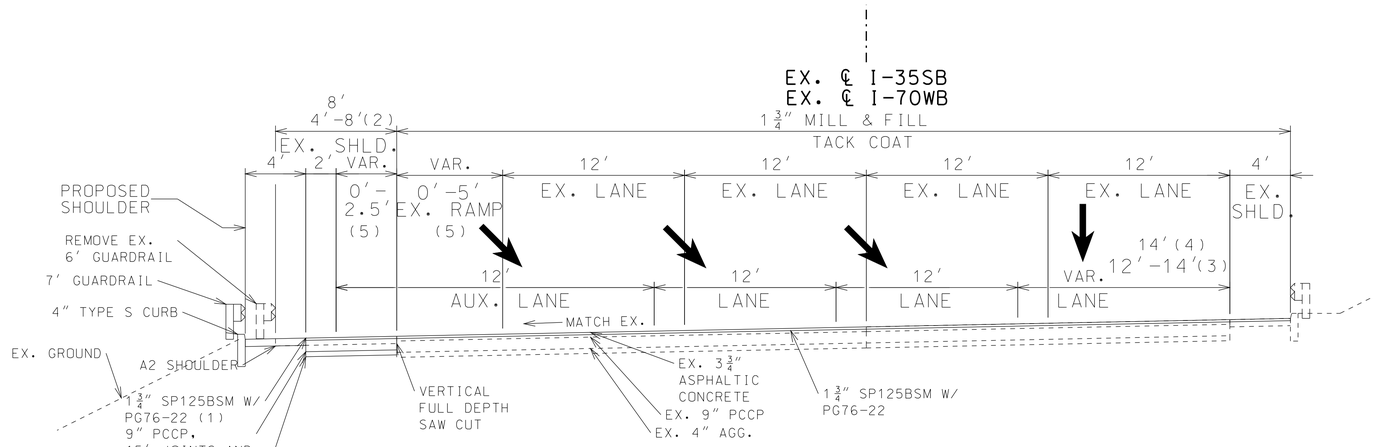


STA. 310+63.36 TO 312+86.28
I-35SB ALL 3 LANES
7.5' LATERAL SHIFT
OVER 206.5'
(330' LANE SHIFT TOTAL)

NOTES:
(2) - STA. 310+78.85 TO 312+28.99
(3) - STA. 310+78.85 TO 311+34.12
(4) - STA. 311+34.12 TO 312+86.28
(5) - STA. 310+78.85 TO 312+86.28

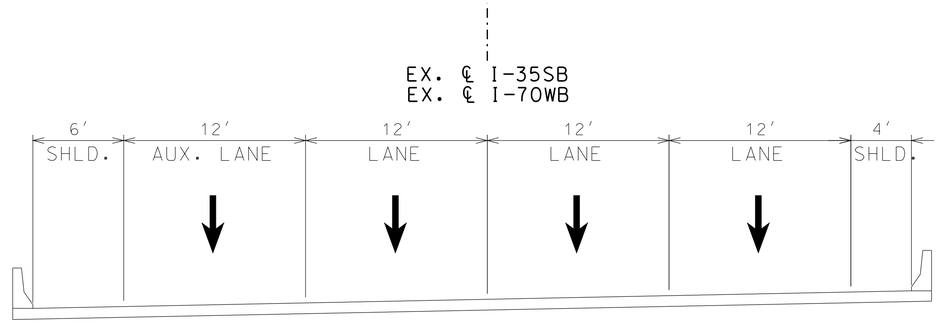


STA. 309+47.18 TO 310+63.36
BRIDGE. L07816
REDECK & 2' WIDENING
SEE BRIDGE PLANS FOR DETAILS

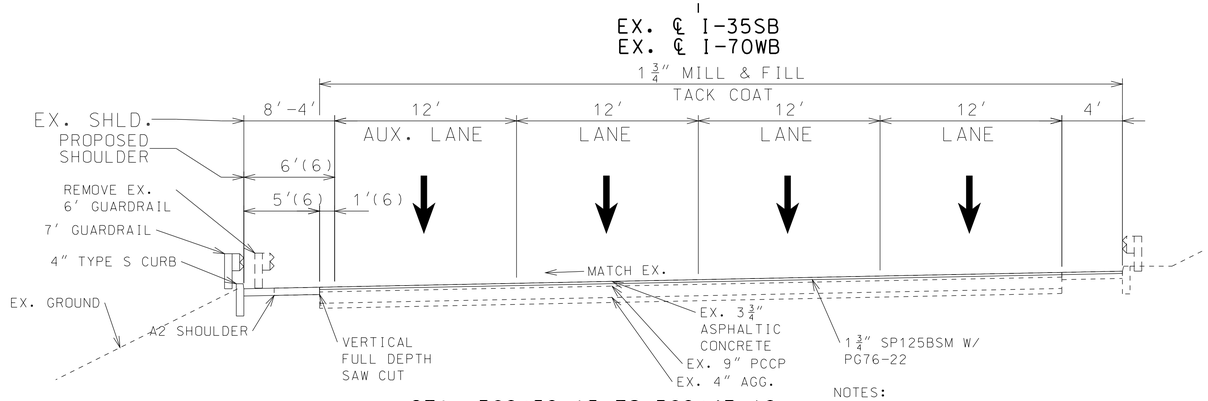


STA. 308+52.15 TO 309+47.18

NOTES:
(6) - STA. 308+86.18 TO 309+31.85

NOTES:
(1) - BONDED ASPHALTIC CONCRETE SEE JSP'S FOR DETAILS
NO S.E. CORRECTION.

TYPICAL SECTION
SHEET 2 OF 3

"THIS MEDIA SHOULD NOT BE CONSIDERED A CERTIFIED DOCUMENT."

| | |
|---|---|
| DATE PREPARED | 12/13/2012 |
| ROUTE | 35/70 |
| STATE | MO |
| DISTRICT | KC |
| SHEET NO. | 2 |
| COUNTY | JACKSON |
| JOB NO. | J4I2371 |
| CONTRACT ID. | |
| PROJECT NO. | |
| BRIDGE NO. | L07816, L07817 |

DESCRIPTION

DATE

MISSOURI HIGHWAYS AND TRANSPORTATION COMMISSION
105 WEST CAPITOL
JEFFERSON CITY, MO 65102
1-888-ASK-MODOT (1-888-275-6636)

IF A SEAL IS PRESENT ON THIS SHEET IT HAS BEEN ELECTRONICALLY SEALED AND DATED.

ESTIMATE FACTORS:
FOR ESTIMATE PURPOSES ONLY

SP125BSM - 2.301 TONS/CUYD
SP125C - 1.990 TONS/CUYD
SP250C - 2.007 TONS/CUYD
TACK COAT - 0.1 GAL/SQYD

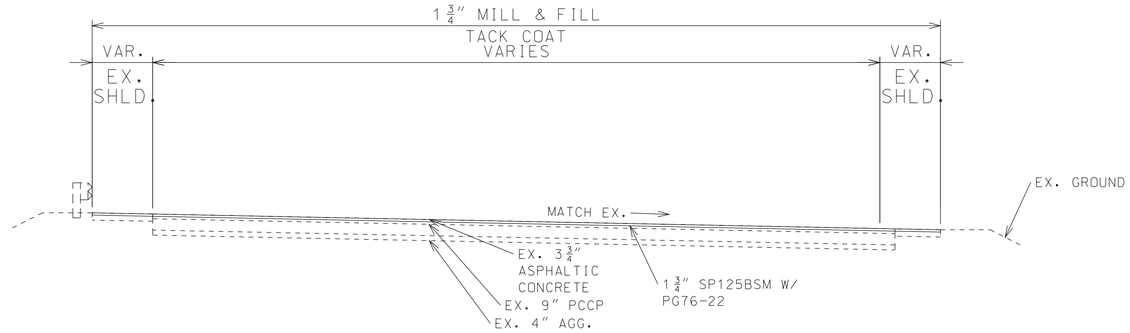


NB I-35/EB I-70
L.M. 3.820 TO 3.838

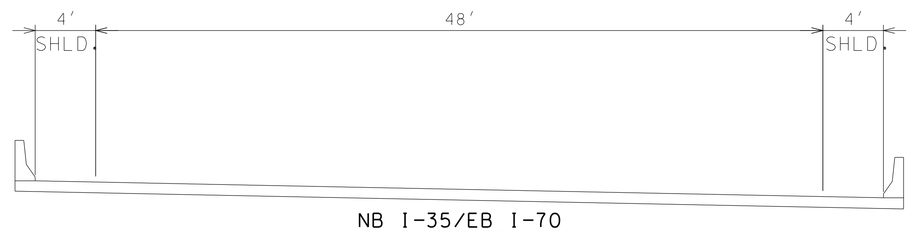


NB I-35/EB I-70
L.M. 3.797 TO 3.820
BRIDGE. L078167
REDECK
SEE BRIDGE PLANS FOR DETAILS

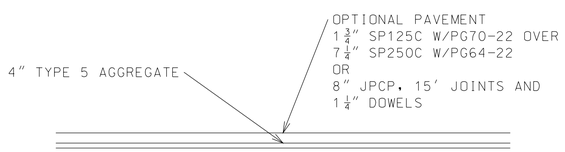


OPTIONAL PAVEMENT (TEMPORARY)
(LEFT IN PLACE)
(SEE TRAFFIC CONTROL PLANS
FOR DETAILS)

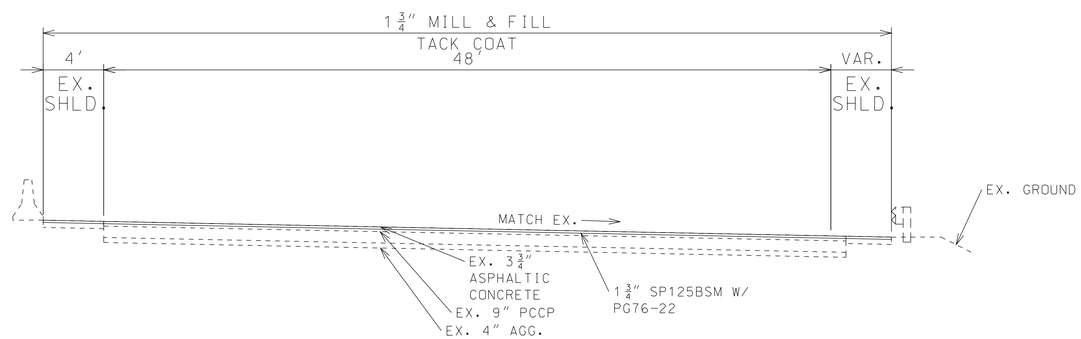


NB I-35/EB I-70
L.M. 3.779 TO 3.797

NOTES:
NO S.E. CORRECTION.

TYPICAL SECTION
SHEET 3 OF 3

"THIS MEDIA SHOULD NOT BE CONSIDERED A CERTIFIED DOCUMENT."

| | |
|---|---|
| DATE PREPARED | 12/13/2012 |
| ROUTE | 35/70 |
| STATE | MO |
| DISTRICT | KC |
| SHEET NO. | 2 |
| COUNTY | JACKSON |
| JOB NO. | J4I2371 |
| CONTRACT ID. | |
| PROJECT NO. | |
| BRIDGE NO. | L07816, L07817 |

| DATE | DESCRIPTION |
|---|---|
| | |

MISSOURI HIGHWAYS AND TRANSPORTATION COMMISSION
105 WEST CAPITOL
JEFFERSON CITY, MO 65102
1-888-ASK-MODOT (1-888-275-6636)

IF A SEAL IS PRESENT ON THIS SHEET IT HAS BEEN ELECTRONICALLY SEALED AND DATED.

# MISSOURI HIGHWAYS AND TRANSPORTATION COMMISSION

## SUMMARY OF QUANTITIES

### REMOVAL OF IMPROVEMENTS

| ITEM | FROM | TO | LOCATION | UNIT | QUANTITY | REMARKS |
|---|---|---|---|---|---|---|
| CURB TYPE S | STA. 308+86.18 LT. | STA. 309+31.85 LT. | 35SB/70WB | LF | 46 | |
| SHOULDER | STA. 308+86.18 LT. | STA. 309+31.85 LT. | 35SB/70WB | SQYD | 20 | |
| GUARDRAIL | STA. 308+76.31 LT. | STA. 309+31.85 LT. | 35SB/70WB | LF | 56 | |
| PAVEMENT | STA. 309+47.18 | STA. 309+52.18 | 35SB/70WB | SQYD | 31 | |
| GUARDRAIL | STA. 309+43.62 RT. | STA. 309+61.20 RT. | 35SB/70WB | LF | 18 | |
| GUARDRAIL | STA. 310+49.07 RT. | STA. 310+66.56 RT. | 35SB/70WB | LF | 18 | |
| PAVEMENT | STA. 310+58.36 | STA. 310+63.36 | 35SB/70WB | SQYD | 31 | |
| CURB TYPE S | STA. 310+78.83 LT. | STA. 315+35.41 LT. | 35SB/70WB | LF | 457 | |
| SHOULDER | STA. 310+78.85 LT. | STA. 315+75.41 LT. | 35SB/70WB | SQYD | 384 | |
| GUARDRAIL | STA. 310+78.85 LT. | STA. 315+40.16 LT. | 35SB/70WB | LF | 462 | |
| PAVEMENT | STA. 312+86.28 RT. | STA. 314+09.78 RT. | 35SB/70WB | SQYD | 51 | |
| EX. SIGN | STA. 307+37 LT. | | 35SB/70WB | EACH | 1 | |
| EX. SIGN | STA. 313+40 LT. | | 35SB/70WB | EACH | 1 | |
| GUARDRAIL | SW CORNER OF BRIDGE L07817 | | 35NB/70EB | LF | 19 | |
| PAVEMENT | WEST SIDE OF BRIDGE L07817 | | 35NB/70EB | SQYD | 31 | |
| GUARDRAIL | NE CORNER OF BRIDGE L07817 | | 35NB/70EB | LF | 18 | |
| PAVEMENT | EAST SIDE OF BRIDGE L07817 | | 35NB/70EB | SQYD | 31 | |
| GORE/SHOULDER | AREA A | | 35NB/70EB | SQYD | 315 | STAGE 1 TC |
| CURB & GUTTER | AREA A | | 35NB/70EB | SQYD | 160 | STAGE 1 TC |
| GUARDRAIL | AREA B | | 35NB/70EB | LF | 96 | STAGE 1 TC |
| SHOULDER | AREA B | | 35NB/70EB | SQYD | 48 | STAGE 1 TC |
| CURB TYPE S | AREA B | | 35NB/70EB | LF | 80 | STAGE 1 TC |
| APPROACH SLAB | EAST SIDE OF BRIDGE L07816 | | 35SB/70WB | SQYD | 125 | |
| APPROACH SLAB | WEST SIDE OF BRIDGE L07816 | | 35SB/70WB | SQYD | 125 | |
| APPROACH SLAB | EAST SIDE OF BRIDGE L07817 | | 35NB/70EB | SQYD | 135 | |
| APPROACH SLAB | WEST SIDE OF BRIDGE L07817 | | 35NB/70EB | SQYD | 136 | |
| 1 LUMP SUM | | | | | | |

### FULL DEPTH VERTICAL SAW-CUTS

| FROM | TO | LOCATION | LENGTH |
|---|---|---|---|
| STA. 308+86. 18 OFF. 30.7 LT. | STA. 308+86.18 OFF 25.0 LT. | 35SB/70WB | 5.7 |
| STA. 308+86.18 OFF 25.0 LT. | STA. 309+31.85 OFF. 25.0 LT. | 35SB/70WB | 45.6 |
| STA. 309+31.85 OFF. 25.0 LT. | STA. 309+31.85 OFF. 28.6 LT. | 35SB/70WB | 3.5 |
| STA. 309+47.14 OFF. 28.0 LT. | STA. 309+47.21 OFF. 27.8 RT. | 35SB/70WB | 55.8 |
| STA. 310+63.34 OFF. 27.9 LT. | STA. 310+63.38 OFF. 27.9 RT. | 35SB/70WB | 55.8 |
| STA. 310+79.00 OFF. 28.4 LT. | STA. 310+79.00 OFF. 24.0 LT. | 35SB/70WB | 4.4 |
| STA. 310+79.00 OFF 24.0 LT. | STA. 315+75.41 OFF. 36.0 LT. | 35SB/70WB | 496.7 |
| STA. 315+75.41 OFF. 36.0 LT. | STA. 315+75.41 OFF 38.0 LT. | 35SB/70WB | 2.0 |
| STA. 315+75.41 OFF 38.0 LT. | STA. 315+35.41 OFF. 38.0 LT. | 35SB/70WB | 40.0 |
| STA. 315+35.41 OFF. 38.0 LT. | STA. 315+35.41 OFF. 43.4 LT. | 35SB/70WB | 5.5 |
| STA. 312+86.28 OFF 0.0 RT. | STA. 314+09.78 OFF 0.0 RT. | 35SB/70WB | 123.5 |
| STA. 314+09.78 OFF 0.0 RT. | STA. 314+09.78 OFF. 2.0 RT. | 35SB/70WB | 2.0 |
| STA. 314+09.78 OFF. 2.0 RT. | STA. 313+14.33 OFF. 5.5 RT. | 35SB/70WB | 95.5 |
| STA. 313+14.33 OFF. 5.5 RT. | STA. 312+86.10 OFF. 2.0 RT. | 35SB/70WB | 28.5 |
| STA. 312+86.10 OFF. 2.0 RT. | STA. 312+86.28 OFF 0.0 RT. | 35SB/70WB | 2.0 |
| N. 1070542.71, E. 2768033.97 | N. 1070487.32, E. 2768028.00 | 35NB/70EB | 55.7 |
| N. 1070530.20, E. 2768152.98 | N. 1070474.49, E. 2768147.36 | 35NB/70EB | 56.0 |
| N. 1070472.91, E. 2768156.39 | N. 1070477.41, E. 2768157.12 | 35NB/70EB | 4.6 |
| N. 1070477.41, E. 2768157.12 | N. 1070472.42, E. 2768183.94 | 35NB/70EB | 27.3 |
| N. 1070472.42, E. 2768183.94 | N. 1070466.26, E. 2768209.90 | 35NB/70EB | 26.7 |
| N. 1070466.26, E. 2768209.90 | N. 1070458.37, E. 2768235.26 | 35NB/70EB | 26.6 |
| N. 1070458.37, E. 2768235.26 | N. 1070449.81, E. 2768232.60 | 35NB/70EB | 9.0 |
| N. 1070469.59, E. 2768316.28 | N. 1070469.71, E. 2768310.62 | 35NB/70EB | 5.7 |
| N. 1070469.71, E. 2768310.62 | N. 1070455.46, E. 2768303.34 | 35NB/70EB | 16.0 |
| N. 1070455.46, E. 2768303.34 | N. 1070469.34, E. 2768274.55 | 35NB/70EB | 32.0 |
| N. 1070469.34, E. 2768274.55 | N. 1070479.92, E. 2768246.80 | 35NB/70EB | 29.7 |
| N. 1070479.92, E. 2768246.80 | N. 1070489.42, E. 2768241.89 | 35NB/70EB | 32.0 |
| N. 1070489.42, E. 2768241.89 | N. 1070496.47, E. 2768185.87 | 35NB/70EB | 31.2 |
| N. 1070496.47, E. 2768185.87 | N. 1070498.44, E. 2768186.24 | 35NB/70EB | 2.0 |
| N. 1070498.44, E. 2768186.24 | N. 1070493.03, E. 2768236.09 | 35NB/70EB | 50.1 |
| N. 1070493.03, E. 2768236.09 | N. 1070486.89, E. 2768285.81 | 35NB/70EB | 50.1 |
| N. 1070486.89, E. 2768285.81 | N. 1070480.55, E. 2768335.49 | 35NB/70EB | 50.1 |
| N. 1070480.55, E. 2768335.49 | N. 1070474.18, E. 2768385.16 | 35NB/70EB | 50.1 |
| N. 1070474.18, E. 2768385.16 | N. 1070468.57, E. 2768434.97 | 35NB/70EB | 50.1 |
| N. 1070468.57, E. 2768434.97 | N. 1070463.74, E. 2768476.93 | 35NB/70EB | 42.2 |
| N. 1070463.74, E. 2768476.93 | N. 1070458.77, E. 2768476.35 | 35NB/70EB | 5.0 |
| FOR INFORMATION ONLY (NO DIRECT PAY) | | TOTAL | 1618.7 |

### CONTRACTOR FURNISHED SURVEYING AND STAKING

1 LUMP SUM

### MOBILIZATION

1 LUMP SUM

### EARTHWORK

| FROM | TO | LOCATION | SUBGRADING & SHOULDERING CLASS 1 100 L.F. | SUBGRADE COMPACTION (6 IN. DEPTH) 100 L.F. |
|---|---|---|---|---|
| STA 308+86.18 | STA 309+31.85 | 35SB/70WB LT. | 0.46 | 0.46 |
| STA 310+78.85 | STA 315+75.41 | 35SB/70WB LT. | 4.97 | 4.97 |
| STA 312+86.28 | STA 314+09.78 | 35SB/70WB RT. | 1.24 | 1.24 |
| AREA A | | 35NB | 2.93 | 2.93 |
| AREA B | | 70EB | 0.81 | 0.81 |
| | | TOTAL | 10 | 10 |

### 4" CURB TYPE S

| FROM | TO | LOCATION | 4" CONC. CURB TYPE S LF |
|---|---|---|---|
| STA 308+86.18 | STA 309+31.85 | 35SB/70WB LT. | 45.7 |
| STA 310+78.85 | STA 315+75.41 | 35SB/70WB LT. | 496.6 |
| AREA A | | 35NB | 160 |
| AREA B | | 70EB | 80 |
| | | TOTAL | 782 |

### TEMPORARY EROSION CONTROL

| FROM | TO | LOCATION | TYPE II DITCH CHECK EACH | SILT FENCE LF | SEDIMENT REMOVAL CUYD | SEEDING COOL SEASON MIXTURES ACRE |
|---|---|---|---|---|---|---|
| | | 35SB/70WB | 2 | 500 | 7 | 0.2 |
| | | CHARLOTTE ST. | 1 | | 1 | |
| | | TOTALS | 3 | 500 | 8 | 0.2 |

### STORM SEWER

| LOCATION | ADJUST MANHOLE EACH | REMARKS |
|---|---|---|
| N. 1070481.17, E. 2768279.82* | 1 | 35NB/70EB GORE |

*APPROXIMATE LOCATION
TO BE LOCATED AFTER REMOVAL OF GORE/SHOULDER PAVEMENT

SUMMARY SHEET
SHEET 1 OF 3

"THIS MEDIA SHOULD NOT BE CONSIDERED A CERTIFIED DOCUMENT."

DATE PREPARED 1/11/2013
ROUTE 35/70 | STATE MO
DISTRICT KC | SHEET NO. 3
COUNTY JACKSON
JOB NO. J4I2371
CONTRACT ID.
PROJECT NO.
BRIDGE NO.

DESCRIPTION | DATE

IF A SEAL IS PRESENT ON THIS SHEET IT HAS BEEN ELECTRONICALLY SEALED AND DATED.

MISSOURI HIGHWAYS AND TRANSPORTATION COMMISSION
105 WEST CAPITOL
JEFFERSON CITY, MO 65102
1-888-ASK-MODOT (1-888-275-6636)

REV.

# MISSOURI HIGHWAYS AND TRANSPORTATION COMMISSION

## SUMMARY OF QUANTITIES

### PAVEMENT

| FROM | TO | LOCATION | PAVEMENT WIDTH FT | SHOULDER WIDTH FT | ASPH. CONC. SP125BSM W/PG76-22 TONS | 9" PCCP NON-REINFORCED 15 FT. JOINTS SQYD | 10" PCCP NON-REINFORCED 15 FT. JOINTS SQYD | OPTIONAL PAVEMENT (TEMPORARY) SQYD | TACK COAT GAL. | OPTIONAL A2 SHOULDER SQYD | TYPE 5 AGGREGATE SQYD | COLDMILLING BIT. PAVE. FOR REMOVAL OF SURFACING (3 IN. OR LESS) SQYD | MODIFIED COLDMILLING DEPTH TRANS. SQYD |
|---|---|---|---|---|---|---|---|---|---|---|---|---|---|
| STA 308+86.18 | STA 309+31.85 | 35SB/70WB LT. | 0 | 5 | | | | | | 25.4 | 25.4 | | |
| STA 310+78.85 | STA 314+09.78 | 35SB/70WB LT. | 2-6 | 4 | 49.4 | 147.1 | | | 14.7 | 147.1 | 294.2 | | |
| STA 314+09.78 | STA 315+75.41 | 35SB/70WB LT. | 6-2 | 0 | 24.7 | 73.6 | | | 7.4 | 0.0 | 73.6 | | |
| STA 314+09.78 | STA 315+35.41 | 35SB/70WB LT. | 0 | 4 | | | | | | 55.8 | 55.8 | | |
| STA 312+86.28 | STA 313+14.33 | 35SB/70WB RT. | 2-5 | 0 | 3.7 | | 10.9 | | 1.1 | 0 | 10.9 | | |
| STA 313+14.33 | STA 314+09.78 | 35SB/70WB RT. | 5-2 | 0 | 12.5 | | 37.1 | | 3.7 | 0 | 37.1 | | |
| STA 308+52.15 | STA 309+47.18 | 35SB/70WB | VAR. | VAR. | 196.8 | | | | 58.7 | | | | 586.6 |
| STA 310+63.36 | STA 315+75.41 | 35SB/70WB | VAR. | VAR. | 1045.3 | | | | 311.5 | | | 2551.5 | 563.6 |
| L.M. 3.779 | L.M. 3.797 | 35NB/70EB | VAR. | VAR. | 197.8 | | | | 59.0 | | | | 589.5 |
| L.M. 3.820 | L.M. 3.838 | 35NB/70EB | VAR. | VAR. | 219.3 | | | | 65.3 | | | | 653.4 |
| AREA A | | 35NB | VAR. | VAR. | | | | 339.6 | | | 339.6 | | |
| AREA B | | 70EB | VAR. | VAR. | | | | 53.3 | | | 53.3 | | |
| | | | | TOTALS | 1749.5 | 220.7 | 48.0 | 392.9 | 520 | 228.3 | 890 | 2552 | 2393 |

### PAVEMENT MARKING

| FROM | TO | LOCATION | 4" WHITE REMOVABLE PREFORMED MARKING TAPE LF | 4" YELLOW REMOVABLE PREFORMED MARKING TAPE LF | 8" WHITE REMOVABLE PREFORMED MARKING TAPE LF | 6" WHITE ACRYLIC WATERBORNE PAVEMENT MARKING PAINT LF | 6" YELLOW ACRYLIC WATERBORNE PAVEMENT MARKING PAINT LF | 12" WHITE ACRYLIC WATERBORNE PAVEMENT MARKING PAINT LF | 24" WHITE ACRYLIC WATERBORNE PAVEMENT MARKING PAINT LF | 6" WHITE WET REFLECTIVE EPOXY PAVEMENT MARKING PAINT LF | GROOVING FOR PAVEMENT MARKING LF | PAVEMENT MARKING REMOVAL LF | REMARKS |
|---|---|---|---|---|---|---|---|---|---|---|---|---|---|
| | | 35SB/70WB | 2322 | 1605 | 1286 | | | | | | | 1980 | STAGE 1 TC |
| | | 35NB/70EB | 1741 | 1824 | 419 | | | | | | | 1834 | STAGE 1 TC |
| | | SB 9 OFF RAMP | | | 173 | | | | | | | | STAGE 1 TC |
| | | 35SB/70WB | 2112 | 562 | 630 | | | | | | | 5180 | STAGE 2 TC |
| | | 35NB/70EB | 1539 | 365 | | | | | | | | 4669 | STAGE 2 TC |
| | | 35SB/70WB | | | | 3074 | 2051 | 2058 | 310 | 653 | 653 | 5497 | PERMENANT |
| | | 35NB/70EB | | | | 1395 | 1815 | 939 | 263 | 680 | 680 | 1904 | PERMENANT |
| | | SB 9 OFF RAMP | | | | | | | | | | 173 | PERMENANT |
| | | TOTALS | 7714 | 4356 | 2508 | 4469 | 3866 | 2997 | 573 | 1333 | 1333 | 21237 | |

### GUARDRAIL

| FROM | TO | LOCATION | 28" GUARDRAIL TYPE A TYPE A 7 FT. POST, 3 FT.-1.5 IN. SPACING LF | 28" TRANSITION SECTION, 7.5 FT. POSTS EACH | 28" BRIDGE ANCHOR SECTION 7 FT. POSTS EACH | 28" TRANSITION SECTION, 6.5 FT. POSTS EACH | 28" BRIDGE ANCHOR SECTION, 6.5 FT. POSTS (SAFETY BARRIER CURB) EACH | GUARDRAIL TYPE A LF | GUARDRAIL TYPE A 7 FT. POST, 3 FT.-1.5 IN. SPACING LF | GUARDRAIL TYPE E 7 FT. POST EACH | TRANSITION SECTION 6.5 FT. POSTS EACH | TRANSITION SECTION 7.5 FT. POSTS EACH | BRIDGE ANCHOR SECTION 7 FT. POSTS EACH | BRIDGE ANCHOR SECTION 6.5 FT. POSTS (SAFETY BARRIER CURB) (ROADWAY AND REHAB. WORK ONLY) EACH | BRIDGE ANCHOR SECTION 7.5 FT. POSTS (SAFETY BARRIER CURB) (ROADWAY AND REHAB. WORK ONLY) EACH | TYPE A CRASHWORTHY END TERMINAL EACH |
|---|---|---|---|---|---|---|---|---|---|---|---|---|---|---|---|---|
| STA 308+76.31 | STA 309+31.85 | 35SB/70WB LT. | 37.5 | 1 | 1 | | | | | | | | | | | |
| STA 309+43.62 | STA 309+61.20 | 35SB/70WB RT. | | | | 1 | 1 | | | | | | | | | |
| STA 310+78.85 | STA 313+30.85 | 35SB/70WB LT. | | | | | | | 234.0 | | | 1 | 1 | | | |
| STA 313+30.85 | STA 313+68.35 | 35SB/70WB LT. | | | | | | | | 25.0 | | 2 | | | | |
| STA 313+68.35 | STA 315+40.16 | 35SB/70WB LT. | | | | | | | 154.0 | | | 1 | | | 1 | |
| STA 310+49.07 | STA 310+66.56 | 35SB/70WB RT. | | | | 1 | 1 | | | | | | | | | |
| SW CORNER BR. L07817 | | 35NB/70EB RT. | | | | 1 | 1 | | | | | | | | | |
| NW CORNER BR. L07817 | | 35NB/70EB LT. | | | | 1 | 1 | | | | | | | | | |
| AREA A | | 35NB RT. | | | | | | 12.5 | | | 1 | | | 1 | | 1 |
| | | TOTALS | 38 | 1 | 1 | 4 | 4 | 13 | 388 | 25 | 1 | 4 | 1 | 1 | 1 | 1 |

### LIGHTING

| FROM | TO | LOCATION | CENTER TO CENTER DISTANCE LF | 1 IN. CABLE-CONDUIT 2C AND 1 BARE NUETRAL, 8 AWG LF | 1 IN. CABLE CONDUIT 2C AND 1 BARE NUETRAL, 6 AWG LF | 1 IN. CABLE-CONDUIT 2C AND 1 BARE NUETRAL, 2 AWG LF | TRENCHING TYPE 1 LF | CABLE 1C 8 AWG LF | WIRE BARE NUETRAL 8 AWG LF | CABLE 1C 2 AWG LF | WIRE BARE NUETRAL 2 AWG LF | PREFORMED PULL BOX CLASS 1 EACH | REMARKS |
|---|---|---|---|---|---|---|---|---|---|---|---|---|---|
| EX. L.P. 1 | EX. L.P 2 | 35SB/70WB LT. | 231 | 253 | | | 231 | | | | | | |
| EX. L.P. 2 | EX. L.P. 3 | 35SB/70WB LT. | 292 | 175 | | | 146 | 321 | 166 | | | | |
| EX. L.P. 3 | EX. P.B. 2 | 35SB/70WB LT. | 45 | 58 | | | 45 | | | | | | |
| EX. L.P. 4 | EX. P.B. 3 | 35SB/70WB LT. | 146 | 164 | | | 146 | | | | | | |
| EX. P.B. 3 | EX. P.B. 2 | 35SB/70WB LT. | 129 | 147 | 147 | | 129 | | | | | | |
| P.B. 1 | EX. L.P. 5 | 35SB/70WB LT. | 147 | | | 73 | 59 | | | 197 | 104 | 1 | |
| | | | SUB-TOTALS | 797 | 147 | 73 | 756 | 321 | 166 | 197 | 104 | 1 | |
| | | | PAY-TOTALS | 800 | 150 | 70 | 756 | 320 | 170 | 200 | 100 | 1 | |

SUMMARY SHEET
SHEET 2 OF 3

"THIS MEDIA SHOULD NOT BE CONSIDERED A CERTIFIED DOCUMENT."

| DATE PREPARED | |
|---|---|
| 1/11/2013 | |
| ROUTE 35/70 | STATE MO |
| DISTRICT KC | SHEET NO. 3 |
| COUNTY JACKSON | |
| JOB NO. J4I2371 | |
| CONTRACT ID. | |
| PROJECT NO. | |
| BRIDGE NO. | |

DESCRIPTION

DATE

MISSOURI HIGHWAYS AND TRANSPORTATION COMMISSION

105 WEST CAPITOL
JEFFERSON CITY, MO 65102
1-888-ASK-MODOT (1-888-275-6636)

IF A SEAL IS PRESENT ON THIS SHEET IT HAS BEEN ELECTRONICALLY SEALED AND DATED.

REV.

EFFECTIVE: 08-01-2012

| SIGN | SIZE (IN.) | AREA (SQ. FT.) | QTY | TOTAL AREA | QTY RELOC | TOTAL RELOC AREA | DESCRIPTION |
|---|---|---|---|---|---|---|---|
| **WARNING SIGNS** | | | | | | | |
| W01-1L | 48X48 | 16.00 | | | | | TURN (SYMBOL LEFT ARROW) |
| W01-1R | 48X48 | 16.00 | | | | | TURN (SYMBOL RIGHT ARROW) |
| W01-2L | 48X48 | 16.00 | | | | | CURVE (SYMBOL LEFT ARROW) |
| W01-2R | 48X48 | 16.00 | | | | | CURVE (SYMBOL RIGHT ARROW) |
| W01-3L | 48X48 | 16.00 | | | | | REVERSE TURN (SYMBOL LEFT ARROW) |
| W01-3R | 48X48 | 16.00 | | | | | REVERSE TURN (SYMBOL RIGHT ARROW) |
| W01-4L | 48X48 | 16.00 | 3 | 48.00 | | | REVERSE CURVE (SYMBOL LEFT ARROW) |
| W01-4R | 48X48 | 16.00 | 3 | 48.00 | | | REVERSE CURVE (SYMBOL RIGHT ARROW) |
| W01-4bL | 48X48 | 16.00 | 3 | 48.00 | | | DOUBLE ARROW REVERSE CURVE (SYMBOL LEFT ARROWS) |
| W01-4bR | 48X48 | 16.00 | 4 | 64.00 | | | DOUBLE ARROW REVERSE CURVE (SYMBOL RIGHT ARROWS) |
| W01-4cL | 48X48 | 16.00 | | | | | TRIPLE ARROW REVERSE CURVE (SYMBOL LEFT ARROWS) |
| W01-4cR | 48X48 | 16.00 | | | | | TRIPLE ARROW REVERSE CURVE (SYMBOL RIGHT ARROWS) |
| W01-6 | 60X30 | 12.50 | | | | | HORIZONTAL ARROW (SYMBOL) |
| W01-6a | 72X36 | 18.00 | | | | | HORIZONTAL ARROW (SYMBOL ON PERMANENT BARRICADE) |
| W01-7 | 60X30 | 12.50 | | | | | DOUBLE HEAD HORIZONTAL ARROW (SYMBOL) |
| W01-7a | 72X36 | 18.00 | | | | | DOUBLE HEAD HORIZONTAL ARROW (SYMBOL ON PERMANENT BARRICADE) |
| W01-8 | 18X24 | 3.00 | | | | | CHEVRON (SYMBOL) |
| W01-8a | 30X36 | 7.50 | | | | | CHEVRON (SYMBOL FOR DIVIDED HIGHWAYS) |
| W03-1 | 48X48 | 16.00 | | | | | STOP AHEAD (SYMBOL) |
| W03-2 | 48X48 | 16.00 | 2 | 32.00 | | | YIELD AHEAD (SYMBOL) |
| W03-3 | 48X48 | 16.00 | | | | | SIGNAL AHEAD (SYMBOL) |
| W03-4 | 48X48 | 16.00 | 2 | 32.00 | | | BE PREPARED TO STOP |
| W03-5 | 48X48 | 16.00 | 4 | 64.00 | | | SPEED LIMIT AHEAD |
| W04-1L | 48X48 | 16.00 | | | | | MERGE (SYMBOL FROM LEFT) |
| W04-1R | 48X48 | 16.00 | | | | | MERGE (SYMBOL FROM RIGHT) |
| W05-1 | 48X48 | 16.00 | 2 | 32.00 | | | ROAD/BRIDGE/RAMP NARROWS |
| W05-3 | 48X48 | 16.00 | | | | | ONE LANE BRIDGE |
| W05-5 | 48X48 | 16.00 | 4 | 64.00 | | | NARROW LANES |
| W06-1 | 48X48 | 16.00 | | | | | DIVIDED HIGHWAY (SYMBOL) |
| W06-2 | 48X48 | 16.00 | | | | | DIVIDED HIGHWAY END (SYMBOL) |
| W06-3 | 48X48 | 16.00 | | | | | TWO WAY TRAFFIC (SYMBOL) |
| W07-3a | 30X24 | 5.00 | | | | | NEXT XX MILES (PLAQUE) |
| W08-1 | 48X48 | 16.00 | | | | | BUMP |
| W08-2 | 48X48 | 16.00 | | | | | DIP |
| W08-3 | 48X48 | 16.00 | | | | | PAVEMENT ENDS |
| W08-4 | 48X48 | 16.00 | | | | | SOFT SHOULDER |
| W08-5 | 48X48 | 16.00 | | | | | SLIPPERY WHEN WET (SYMBOL) |
| W08-6 | 48X48 | 16.00 | | | | | TRUCK CROSSING WITH FLAGS |
| W08-6c | 48X48 | 16.00 | | | | | TRUCK ENTRANCE |
| W08-7 | 36X36 | 9.00 | | | | | LOOSE GRAVEL |
| W08-9 | 48X48 | 16.00 | | | | | LOW SHOULDER |
| W08-11 | 48X48 | 16.00 | | | | | UNEVEN LANES |
| W08-12 | 48X48 | 16.00 | | | | | NO CENTER LINE |
| W10-1 | 42 RND. | 9.62 | | | | | RAILROAD CROSSING |
| W012-1 | 24X24 | 4.00 | | | | | DOUBLE DOWN ARROW (SYMBOL) |
| W012-2 | 48X48 | 16.00 | | | | | LOW CLEARANCE (SYMBOL) |
| W012-2x | 24X18 | 3.00 | | | | | LOW CLEARANCE (PLAQUE) |
| W012-2a | 84X24 | 14.00 | | | | | OVERHEAD LOW CLEARANCE (FEET AND INCHES) |
| W08-15 | 48X48 | 16.00 | | | | | GROOVED PAVEMENT |
| W08-15p | 30X24 | 5.00 | | | | | MOTORCYCLE (PLAQUE) |
| W08-17 | 48X48 | 16.00 | | | | | SHOULDER DROP-OFF (SYMBOL) |
| W08-17p | 30X24 | 5.00 | | | | | SHOULDER DROP-OFF (PLAQUE) |
| SPECIAL | 120X60 | 50.00 | | | | | LOW CLEARANCE XX FT XX IN XX MILES AHEAD |
| SPECIAL | 120X60 | 50.00 | | | | | WIDTH RESTRICTION XX FT XX IN XX MILES AHEAD |
| W013-1 | 30X30 | 6.25 | 1 | 6.25 | | | ADVISORY SPEED (PLAQUE) |
| W016-2 | 30X24 | 5.00 | | | | | XXX FEET (PLAQUE) |
| W016-3 | 30X24 | 5.00 | | | | | X MILE (PLAQUE) |
| W020-1 | 48X48 | 16.00 | 34 | 544 | | | ROAD/BRIDGE/RAMP WORK AHEAD |
| W020-2 | 48X48 | 16.00 | 7 | 112 | | | DETOUR AHEAD |
| W020-3 | 48X48 | 16.00 | 1 | 16.00 | | | ROAD CLOSED AHEAD |
| W020-3a | 48X48 | 16.00 | 1 | 16.00 | | | ROAD CLOSED 300 FT |
| W020-4 | 48X48 | 16.00 | | | | | ONE LANE ROAD AHEAD |
| W020-5 | 48X48 | 16.00 | 8 | 128 | | | RIGHT/CENTER/LEFT LANE CLOSED AHEAD |
| W020-5a | 48X48 | 16.00 | 2 | 32.00 | | | 2 RIGHT/CENTER/LEFT LANES CLOSED AHEAD |
| W004-3 | 48X48 | 16.00 | 2 | 32.00 | | | LANE ADDED |
| W020-6a | 48X48 | 16.00 | 10 | 96.00 | | | RIGHT/CENTER/LEFT LANE CLOSED |
| W020-7a | 48X48 | 16.00 | | | | | FLAGGER (SYMBOL) WITH FLAGS |
| W021-2 | 36X36 | 9.00 | | | | | FRESH OIL |
| W021-5b | 48X48 | 16.00 | 2 | 32.00 | | | SHOULDER WORK AHEAD |
| W022-1 | 48X48 | 16.00 | | | | | BLASTING ZONE AHEAD |
| W022-2 | 42X36 | 10.50 | | | | | TURN OFF 2-WAY RADIO AND PHONE |
| W022-3 | 42X36 | 10.50 | | | | | END BLASTING ZONE |
| W022-6e | 21X15 | 2.19 | | | | | WET PAINT (ARROW PIVOTS) |
| **GUIDE SIGNS** | | | | | | | |
| SPECIAL | 36X36 | 9.00 | | | | | FRESH OIL/LOOSE GRAVEL |
| E05-1 | 36X48 | 12.00 | 1 | 12.00 | | | GORE EXIT |
| E05-2 | 48X36 | 12.00 | | | | | EXIT OPEN |
| E05-2a | 48X36 | 12.00 | | | | | EXIT CLOSED |
| G020-1 | 60X24 | 10.00 | | | | | ROAD WORK NEXT XX MILES |
| G020-2 | 48X24 | 8.00 | 6 | 48.00 | | | END ROAD WORK |
| G020-5aP | 36X24 | 6.00 | 6 | 36.00 | | | WORK ZONE (PLAQUE) |
| M04-8 | 30X15 | 3.13 | 2 | 6.26 | | | DETOUR |
| | | | | | | | |
| M04-8a | 24X18 | 3.00 | 2 | 6.00 | | | END DETOUR |
| M04-9L | 48X36 | 12.00 | | | | | DETOUR (LEFT ARROW) |
| M04-9R | 48X36 | 12.00 | | | | | DETOUR (RIGHT ARROW) |
| M04-10L | 48X18 | 6.00 | | | | | DETOUR (ARROW LEFT) |
| M04-10R | 48X18 | 6.00 | | | | | DETOUR (ARROW RIGHT) |
| SPECIAL | VAR. | VAR. | 5 | 85.59 | | | STAGE 1 TC |
| SPECIAL | VAR. | VAR. | 18 | 367.50 | | | DETOUR A TC |
| SPECIAL | VAR. | VAR. | 3 | 31.50 | | | STAGE 2 TC |
| SPECIAL | VAR. | VAR. | 36 | 641.50 | | | DETOUR B TC |
| **REGULATORY SIGNS** | | | | | | | |
| R1-1 | 48X48 | 13.25 | | | | | STOP |
| R1-2 | 48 TRI. | 6.93 | 2 | 13.86 | | | YIELD |
| R1-2a | 36X36 | 9.00 | | | | | TO ONCOMING TRAFFIC (PLAQUE) |
| R1-3 | 20X9 | 1.25 | | | | | X-WAY (PLAQUE) |
| R2-1 | 36X48 | 12.00 | 12 | 144 | | | SPEED LIMIT XX |
| R3-1 | 48X48 | 16.00 | | | | | NO RIGHT TURN (SYMBOL) |
| R3-2 | 48X48 | 16.00 | | | | | NO LEFT TURN (SYMBOL) |
| R3-3 | 36X36 | 9.00 | | | | | NO TURNS |
| R3-4 | 48X48 | 16.00 | | | | | NO U-TURN (SYMBOL) |
| R3-7L | 30X30 | 6.25 | 4 | 25.00 | | | LEFT LANE MUST TURN LEFT |
| R3-7R | 30X30 | 6.25 | 4 | 25.00 | | | RIGHT LANE MUST TURN RIGHT |
| R4-1 | 36X48 | 12.00 | | | | | DO NOT PASS |
| R4-2 | 36X48 | 12.00 | | | | | PASS WITH CARE |
| R4-7aL | 36X48 | 12.00 | | | | | KEEP LEFT (HORIZONTAL ARROW) |
| R4-7a | 36X48 | 12.00 | | | | | KEEP RIGHT (HORIZONTAL ARROW) |
| R5-1 | 30X30 | 6.25 | | | | | DO NOT ENTER |
| R5-1a | 36X24 | 6.00 | | | | | WRONG WAY |
| R6-1L | 48X18 | 6.00 | | | | | ONE WAY ARROW (LEFT) |
| R6-1R | 48X18 | 6.00 | | | | | ONE WAY ARROW (RIGHT) |
| R6-2L | 24X30 | 5.00 | | | | | ONE WAY (LEFT) |
| R6-2R | 24X30 | 5.00 | | | | | ONE WAY (RIGHT) |
| R10-6 | 24X36 | 6.00 | | | | | STOP HERE ON RED (45° ARROW) |
| R11-2 | 48X30 | 10.00 | 2 | 20.00 | | | ROAD/RAMP CLOSED |
| R11-3a | 60X30 | 12.50 | | | | | ROAD CLOSED XX MILES AHEAD LOCAL TRAFFIC ONLY |
| R11-4 | 60X30 | 12.50 | | | | | ROAD CLOSED TO THRU TRAFFIC |
| S4-4 | 36X15 | 3.75 | | | | | WHEN FLASHING |
| CONST-3A | 60X48 | 20.00 | | | | | FINE SIGN |
| CONST-3X | 56X12 | 4.67 | | | | | SPEEDING/PASSING (PLATE) |
| R4-9 | 24X30 | 5.00 | 3 | 15.00 | | | STAY IN LANE |
| **MISCELLANEOUS SIGNS** | | | | | | | |
| SPECIAL | 36X48 | 12.00 | | | | | POINT OF PRESENCE |
| SPECIAL | 96X48 | 32.00 | | | | | POINT OF PRESENCE |
| CONST-7-48 | 48X24 | 8.00 | | | | | RATE OUR WORK ZONE |
| CONST-7-72 | 72X36 | 18.00 | 3 | 54.00 | | | RATE OUR WORK ZONE |
| 616-10.05 CONSTRUCTION SIGNS TOTAL | | | | 2977 | | | |
| 616-10.10 RELOCATED SIGNS TOTAL | | | | | | | |

| ITEM NUMBER | TOTAL QTY | DESCRIPTION |
|---|---|---|
| 6122008 | | IMPACT ATTENUATOR (8 SAND BARRELS) |
| 6122009 | 2 | IMPACT ATTENUATOR (9 SAND BARRELS) |
| 6122010 | | IMPACT ATTENUATOR (10 SAND BARRELS) |
| 6122012 | | IMPACT ATTENUATOR (12 SAND BARRELS) |
| 6122014 | | IMPACT ATTENUATOR (14 SAND BARRELS) |
| 6122017 | | IMPACT ATTENUATOR (17 SAND BARRELS) |
| 6122019 | | IMPACT ATTENUATOR (19 SAND BARRELS) |
| 6122020 | 18 | REPLACEMENT SAND BARREL |
| 6122030 | 2 | IMPACT ATTENUATOR ARRAY (RELOCATION) |
| 6123000A | | TRUCK OR TRAILER MOUNTED ATTENUATOR (TMA) |
| 6161007 | | SPEED LIMIT AND STROBE LIGHT ASSEMBLY |
| 6161008 | | ADVANCED WARNING RAIL SYSTEM |
| 6161009 | 61 | FLAG ASSEMBLY |
| 6161020 | | CHANNELIZER (DRUM-LIKE) |
| 6161022 | | CHANNELIZER (CONES) |
| 6161024 | | CHANNELIZER (TRIM LINE) WITH LIGHT |
| 6161025 | 280 | CHANNELIZER (TRIM LINE) |
| 6161026 | | CHANNELIZER (VERTICAL PANEL) |
| 6161027 | | CHANNELIZER (VERTICAL PANEL) WITH LIGHT |
| 6161028 | | CHANNELIZER |
| 6161030 | 9 | TYPE III MOVEABLE BARRICADE |
| 6161031 | | TYPE III MOVEABLE BARRICADE WITH LIGHT |
| 6161033 | 16 | DIRECTION INDICATOR BARRICADE |
| 6161034 | | DIRECTION INDICATOR BARRICADE, WITH LIGHT |
| 6161040 | 4 | FLASHING ARROW PANEL |
| 6161047 | | TYPE III OBJECT MARKER |
| 6161051 | | WARNING LIGHT, TYPE A |
| 6161052 | | WARNING LIGHT, TYPE B |
| 6161053 | | WARNING LIGHT, TYPE C |
| 6161055 | 16 | SEQUENTIAL FLASHING WARNING LIGHT |
| 6161070 | | TUBULAR MARKER |
| 6161095 | | RADAR SPEED ADVISORY SYSTEM |
| 6161096 | | CHANGEABLE MESSAGE SIGN, COMMISSION FURNISHED/RETAINED |
| 6161098 | 6 | CHANGEABLE MESSAGE SIGN, CONTRACTOR FURNISHED/RETAINED |
| 6161100 | | CHANGEABLE MESSAGE SIGN, CONTRACTOR FURNISHED/COMMISSION RETAINED |
| 6173700A | 218 | TEMPORARY TRAFFIC BARRIER W/ANCHORING SYSTEM CONTRACTOR FURNISHED/RETAINED |
| 6173600D | 832 | TEMPORARY TRAFFIC BARRIER CONTRACTOR FURNISHED/RETAINED |
| 6175011A | 218 | RELOCATING TEMPORARY TRAFFIC BARRIER W/ANCHORING SYSTEM |
| 6175010A | 320 | RELOCATING TEMPORARY TRAFFIC BARRIER |
| | | |
| | | |
| 9019400 | | TEMPORARY LIGHTING |
| 9029400 | | TEMPORARY TRAFFIC SIGNALS |
| 9029401 | | TEMPORARY TRAFFIC SIGNALS AND LIGHTING |

QUANTITY SHEET
3 OF 3

"THIS MEDIA SHOULD NOT BE CONSIDERED A CERTIFIED DOCUMENT."

DATE PREPARED 1/11/2013

| ROUTE | STATE |
|---|---|
| 35/70 | MO |
| DISTRICT KC | SHEET NO. 3 |

COUNTY JACKSON

JOB NO. J4I2371

CONTRACT ID.

PROJECT NO.

BRIDGE NO.

| DATE | DESCRIPTION |
|---|---|

MISSOURI HIGHWAYS AND TRANSPORTATION COMMISSION

105 WEST CAPITOL
JEFFERSON CITY, MO 65102
1-888-ASK-MODOT (1-888-275-6636)

IF A SEAL IS PRESENT ON THIS SHEET IT HAS BEEN ELECTRONICALLY SEALED AND DATED.

## LIGHTING LEGEND

| | | | |
|---|---|---|---|
| | CONTROLLER, LIGHTING | | 150 W LUMINAIRE |
| | CONTROLLER, LIGHTING (EXISTING) | | 250 W LUMINAIRE |
| | WOOD POST | | 400 W LUMINAIRE |
| | POWER SOURCE | P.S. | POWER SUPPLY |
| JCT | JUNCTION BOX | | PULL BOX (EXISTING) |
| | PULL BOX CONCRETE TYPE 1 | | PULL BOX CONCRETE TYPE 2 |
| | PULL BOX PREFORMED TYPE 1 | | PULL BOX PREFORMED TYPE 2 |
| | CONDUIT, RIGID (TRENCH) | | CONDUIT, RIGID (PUSHED) |
| | CONDUIT, RIGID (MEDIAN) | | CONDUIT, RIGID (BRIDGE) |
| | CONDUIT, RIGID (EXISTING) | | CABLE-CONDUIT (EXISTING) |
| | EXISTING LIGHT POLE | | CABLE-CONDUIT |

BUILD 28" TYPE A
GUARDRAIL 7' POSTS W/
(1) BRIDGE ANCHOR SECTION
(1) TRANSITION SECTION
℄ SB I-35/WB I-70
STA. 308+76.31 TO
STA. 309+31.85 LT.

BUILD 28"
(1) BRIDGE ANCHOR SECTION
(1) TRANSITION SECTION
℄ SB I-35/WB I-70
STA. 309+43.62 TO
STA. 309+61.20 RT.

BUILD 4" CONC.
CURB TYPE S
℄ SB I-35/WB I-70
STA. 308+86.18 TO
STA. 309+31.85 LT.

BUILD TYPE A
GUARDRAIL, 7 FT. POST W/
(1) BRIDGE ANCHOR SECTION
(1) TRANSITION SECTION
℄ SB I-35/WB I-70
STA. 310+78.85 TO
STA. 313+30.85 LT.

BUILD TYPE E
GUARDRAIL, 7 FT. POST W/
(2) TRANSITION SECTION
℄ SB I-35/WB I-70
STA. 313+30.85 TO
STA. 313+68.35 LT.

BUILD 4" CONC.
CURB TYPE S
℄ SB I-35/WB I-70
STA. 310+78.83 TO
STA. 315+35.41 LT.

BUILD 28"
(1) BRIDGE ANCHOR SECTION
(1) TRANSITION SECTION
℄ SB I-35/WB I-70
STA. 310+49.07 TO
STA. 310+66.56 RT.

BUILD TYPE A
GUARDRAIL, 7 FT. POST W/
(1) BRIDGE ANCHOR SECTION
(1) TRANSITION SECTION
℄ SB I-35/WB I-70
STA. 313+68.35 TO
STA. 315+40.16 LT.

BUILD 28"
(1) BRIDGE ANCHOR SECTION
(1) TRANSITION SECTION
NB I-36/EB I-70
SW CORNER BR. L07817

BUILD 28"
(1) BRIDGE ANCHOR SECTION
(1) TRANSITION SECTION
NB I-35/EB I-70
NE CORNER BR. L07817

NOTES:
(1) - SPLICE IN EXISTING LIGHTING BASE
(2) - SPLICE IN PROPOSED PULL BOX 1
(3) - SPLICE IN EXISTING PULL BOX
S.C.- FULL DEPTH VERTICAL SAWCUT

SUPERPAVE MODIDFIED DEPTH TRANSTION OR MILL & FILL SEE SHEET 1 OF SPECIAL SHEETS FOR DETAILS

REHABILITATE BR. L07816
U.I.P. & REDECK EXISTING
63' SIMPLE COMPOSITE
WIDE FLANGE BEAM SPAN
SKEW - 0° 05' 10" LA
WIDEN BR. & APPROACHES
ON NORTH SIDE 2'

REHABILITATE BR. L07817
U.I.P. & REDECK EXISTING
63' SIMPLE COMPOSITE
WIDE FLANGE BEAM SPAN
SKEW - 3° 38' 00" LA

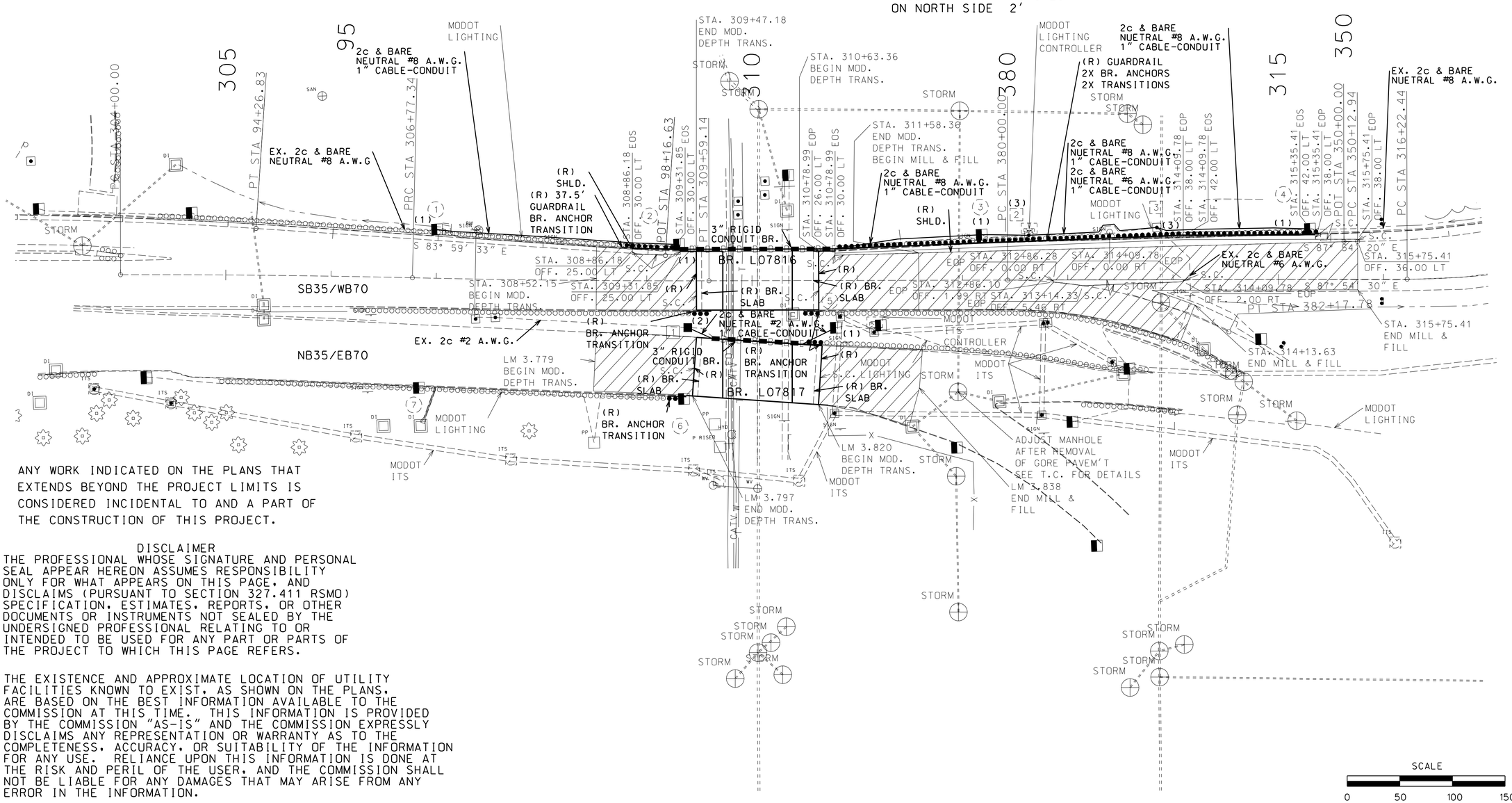


ANY WORK INDICATED ON THE PLANS THAT EXTENDS BEYOND THE PROJECT LIMITS IS CONSIDERED INCIDENTAL TO AND A PART OF THE CONSTRUCTION OF THIS PROJECT.

DISCLAIMER

THE PROFESSIONAL WHOSE SIGNATURE AND PERSONAL SEAL APPEAR HEREON ASSUMES RESPONSIBILITY ONLY FOR WHAT APPEARS ON THIS PAGE, AND DISCLAIMS (PURSUANT TO SECTION 327.411 RSMO) SPECIFICATION, ESTIMATES, REPORTS, OR OTHER DOCUMENTS OR INSTRUMENTS NOT SEALED BY THE UNDERSIGNED PROFESSIONAL RELATING TO OR INTENDED TO BE USED FOR ANY PART OR PARTS OF THE PROJECT TO WHICH THIS PAGE REFERS.

THE EXISTENCE AND APPROXIMATE LOCATION OF UTILITY FACILITIES KNOWN TO EXIST, AS SHOWN ON THE PLANS, ARE BASED ON THE BEST INFORMATION AVAILABLE TO THE COMMISSION AT THIS TIME. THIS INFORMATION IS PROVIDED BY THE COMMISSION "AS-IS" AND THE COMMISSION EXPRESSLY DISCLAIMS ANY REPRESENTATION OR WARRANTY AS TO THE COMPLETENESS, ACCURACY, OR SUITABILITY OF THE INFORMATION FOR ANY USE. RELIANCE UPON THIS INFORMATION IS DONE AT THE RISK AND PERIL OF THE USER, AND THE COMMISSION SHALL NOT BE LIABLE FOR ANY DAMAGES THAT MAY ARISE FROM ANY ERROR IN THE INFORMATION.

"THIS MEDIA SHOULD NOT BE CONSIDERED A CERTIFIED DOCUMENT."

| DATE PREPARED | |
|---|---|
| 12/13/2012 | |
| ROUTE 35/70 | STATE MO |
| DISTRICT KC | SHEET NO. 4 |
| COUNTY JACKSON | |
| JOB NO. J4I2371 | |
| CONTRACT ID. | |
| PROJECT NO. | |
| BRIDGE NO. L07816, L07817 | |

| DATE | DESCRIPTION |
|---|---|

MISSOURI HIGHWAYS AND TRANSPORTATION COMMISSION
105 WEST CAPITOL
JEFFERSON CITY, MO 65102
1-888-ASK-MODOT (1-888-275-6636)

IF A SEAL IS PRESENT ON THIS SHEET IT HAS BEEN ELECTRONICALLY SEALED AND DATED.

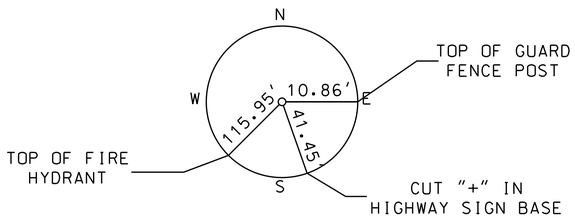


CP - 102

N. 1070887.403
E. 2769280.191
EL.=849.056'

o = SET ½" BAR & CAP W. OF RAMP TO SB I-35 FROM INDEPENDENCE AVE.

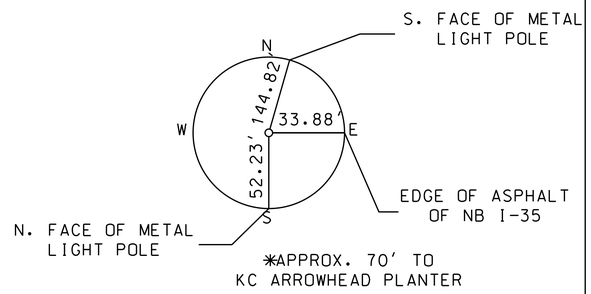


CP - 103

N. 1071672.334
E. 2770305.878
EL. = 839.889'

o = SET ½" BAR & CAP BETWEEN NB & SB I-35 IN GRASS AREA, S. OF PASEO BRIDGE

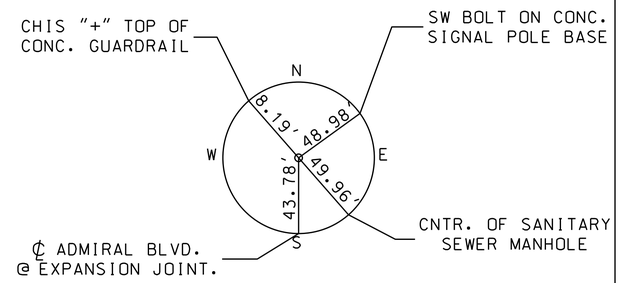


CP - 2

N. 1070206.528
E. 2769010.742
EL. = 927.672'

o = FOUND "+" CUT ON SIDEWALK ON N. SIDE OF ADMIRAL BLVD. BRIDGE

MISSOURI COORDINATE SYSTEM (WEST) OF 1983
RECIPROCAL AVERAGE GRID FACTOR 1.0000972

REFERENCE POINTS
SHEET 1 OF 1

"THIS MEDIA SHOULD NOT BE CONSIDERED A CERTIFIED DOCUMENT."

| DATE PREPARED | |
|---|---|
| 12/13/2012 | |
| ROUTE | STATE |
| 35/70 | MO |
| DISTRICT | SHEET NO. |
| KC | 5 |
| COUNTY | |
| JACKSON | |
| JOB NO. | |
| J4I2371 | |
| CONTRACT ID. | |
| PROJECT NO. | |
| BRIDGE NO. | |

| DESCRIPTION | DATE |
|---|---|
| | |

MISSOURI HIGHWAYS AND TRANSPORTATION COMMISSION

105 WEST CAPITOL
JEFFERSON CITY, MO 65102
1-888-ASK-MODOT (1-888-275-6636)

IF A SEAL IS PRESENT ON THIS SHEET IT HAS BEEN ELECTRONICALLY SEALED AND DATED.

REV.

## BASELINE GEOMETRY

| CURVE NUMBER | STATION | NORTH COORDINATE | EAST COORDINATE | TAN. BEARING | Δ | L (FT.) | T (FT.) | R (FT.) | D | THETA | LS | TS | XS | YS | LC | S.E. % |
|---|---|---|---|---|---|---|---|---|---|---|---|---|---|---|---|---|
| | ℄ I-35/I-70 WB | | | | | | | | | | | | | | | |
| | PC 304+00.00 | 1,070,623.45 | 2,767,489.50 | S 87° 53′ 07″ E | | | | | | | | | | | | |
| C1 | PI 305+38.68 | 1,070,618.33 | 2,767,628.08 | | 1° 25′ 07″ RT | 277.34 | 138.68 | 11,202.48 | 0° 30′ 41″ | | | | | | | 0.02✳ |
| | PT 306+77.34 | 1,070,609.78 | 2,767,766.49 | S 86° 28′ 01″ E | | | | | | | | | | | | |
| | PC 306+77.34 | 1,070,609.78 | 2,767,766.49 | S 86° 28′ 01″ E | | | | | | | | | | | | |
| C2 | PI 308+18.25 | 1,070,601.10 | 2,767,907.13 | | 1° 26′ 30″ RT | 281.8 | 140.91 | 11,199.80 | 0° 30′ 42″ | | | | | | | 0.02✳ |
| | PT 309+59.14 | 1,070,595.96 | 2,768,047.95 | S 87° 54′ 30″ E | | | | | | | | | | | | |
| | PC 316+22.44 | 1,070,571.75 | 2,768,710.81 | S 87° 54′ 30″ E | | 663.30 | | | | | | | | | | |
| C3 | PI 319+16.67 | 1,070,561.01 | 2,769,004.84 | | 42° 19′ 39″ LT | 561.45 | 294.23 | 760.00 | 7° 32′ 20″ | | | | | | | 0.078✳ |
| | PT 321+83.89 | 1,070,571.75 | 2,769,229.45 | N 49° 45′ 51″ E | | | | | | | | | | | | |
| | ℄ RTE 24 ON RAMP | | | | | | | | | | | | | | | |
| | POB 350+00.00 | 1,070,609.91 | 2,768,652.19 | S 87° 54′ 20″ E | | 12.94 | | | | | | | | | | |
| | PC 350+12.94 | 1,070,609.44 | 2,768,665.12 | S 87° 54′ 20″ E | | | | | | | | | | | | |
| C4 | PI 353+20.41 | 1,070,598.22 | 2,768,972.38 | | 42° 31′ 52″ LT | 586.43 | 307.46 | 790.00 | 7° 15′ 52″ | | | | | | | 0.076✳ |
| | PT 355+99.37 | 1,070,797.65 | 2,769,206.39 | N 49° 33′ 37″ E | | | | | | | | | | | | |
| | ℄ RTE 9 OFF RAMP | | | | | | | | | | | | | | | |
| | POB 90+00.00 | 1,070,688.43 | 2,767,193.91 | S 87° 29′ 48″ E | | 182.18 | | | | | | | | | | |
| | PC 91+82.18 | 1,070,680.47 | 2,767,375.92 | S 87° 29′ 48″ E | | | | | | | | | | | | |
| C5 | PI 93+04.54 | 1,070,675.13 | 2,767,498.16 | | 3° 30′ 17″ RT | 244.65 | 122.36 | 3,999.64 | 1° 25′ 57″ | | | | | | | 0.027✳ |
| | PT 94+26.83 | 1,070,662.32 | 2,767,619.85 | S 83° 59′ 32″ E | | | | | | | | | | | | |
| | POT 98+16.63 | 1,070,621.52 | 2,768,007.52 | S 83° 59′ 32″ E | | 389.81 | | | | | | | | | | |
| | ℄ I-70WB | | | | | | | | | | | | | | | |
| | PC 380+00.00 | 1,070,585.60 | 2,768,331.50 | S 87° 54′ 30″ E | | | | | | | | | | | | |
| C6 | PI 381+10.88 | 1,070,581.55 | 2,768,442.30 | | 26° 32′ 53″ RT | 217.78 | 110.88 | 470.00 | 12° 11′ 26″ | | | | | | | 0.078✳ |
| | PT 382+[illegible].78 | 1,070,528.41 | 2,768,539.61 | S 61° 21′ 37″ E | | | | | | | | | | | | |

✳EXISTING CROSS SLOPE

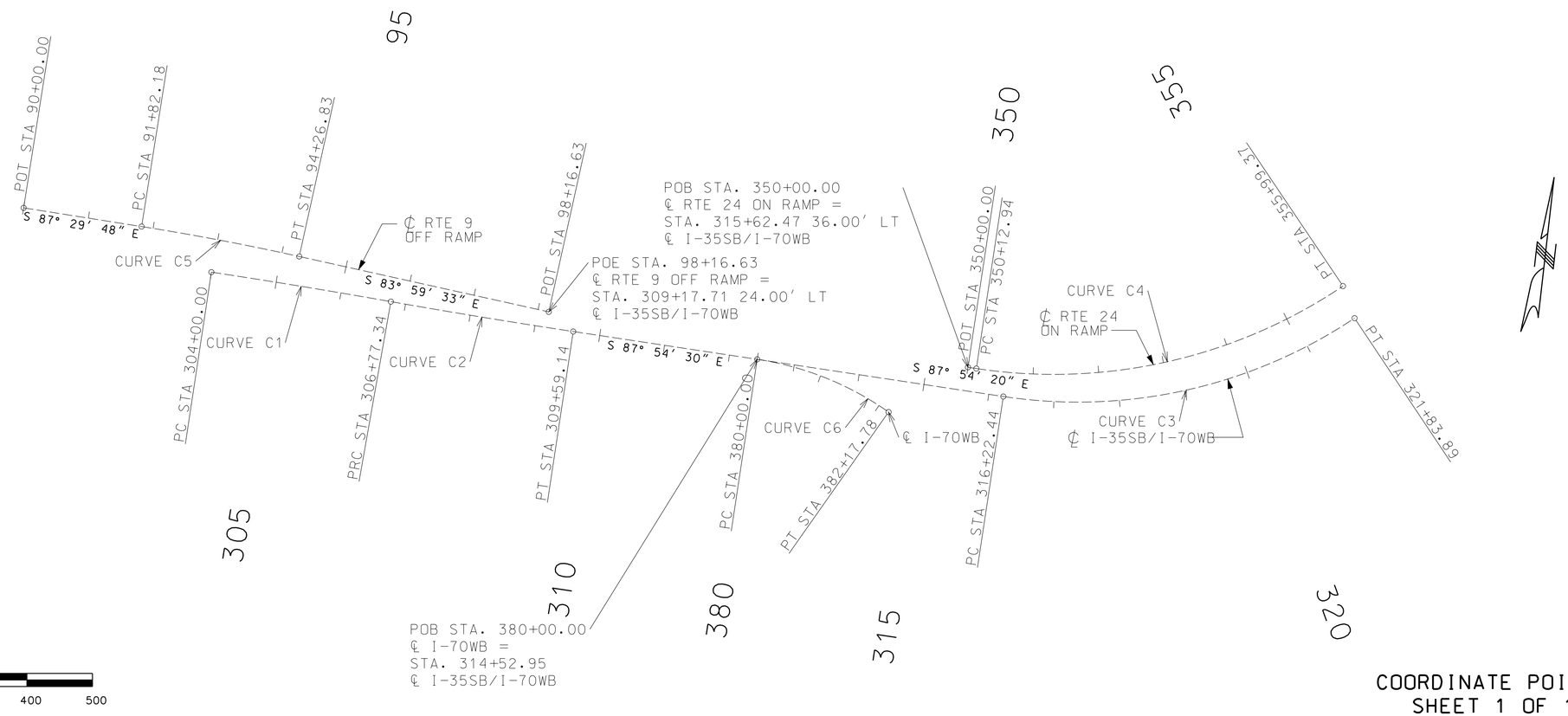


COORDINATE POINTS
SHEET 1 OF 1

"THIS MEDIA SHOULD NOT BE CONSIDERED A CERTIFIED DOCUMENT."

DATE PREPARED: 12/13/2012

ROUTE: 35/70 | STATE: MO

DISTRICT: KC | SHEET NO.: 6

COUNTY: JACKSON

JOB NO.: J4I2371

CONTRACT ID.

PROJECT NO.

BRIDGE NO.

| DATE | DESCRIPTION |
|---|---|
| | |

IF A SEAL IS PRESENT ON THIS SHEET IT HAS BEEN ELECTRONICALLY SEALED AND DATED.


MISSOURI HIGHWAYS AND TRANSPORTATION COMMISSION
105 WEST CAPITOL
JEFFERSON CITY, MO 65102
1-888-ASK-MODOT (1-888-275-6636)

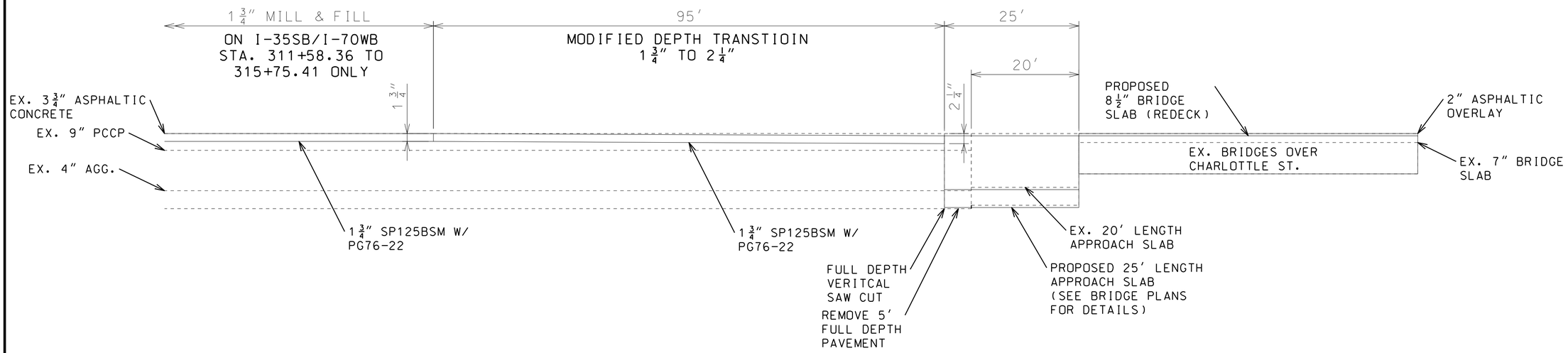


PAVEMENT DEPTH TRANSITION
(AT BRIDGE ENDS)

SPECIAL SHEET
1 OF 19

"THIS MEDIA SHOULD NOT BE CONSIDERED A CERTIFIED DOCUMENT."

| | |
|---|---|
| DATE PREPARED | 12/13/2012 |
| ROUTE | 35/70 |
| STATE | MO |
| DISTRICT | KC |
| SHEET NO. | 7 |
| COUNTY | JACKSON |
| JOB NO. | J4I2371 |
| CONTRACT ID. | |
| PROJECT NO. | |
| BRIDGE NO. | |

DESCRIPTION

DATE

MISSOURI HIGHWAYS AND TRANSPORTATION COMMISSION

105 WEST CAPITOL
JEFFERSON CITY, MO 65102
1-888-ASK-MODOT (1-888-275-6636)

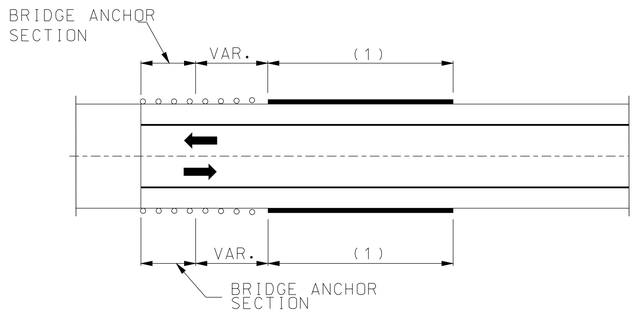


TWO-WAY PAVEMENT - USE GUARDRAIL AT ALL FOUR CORNERS.

AT BRIDGE ENDS

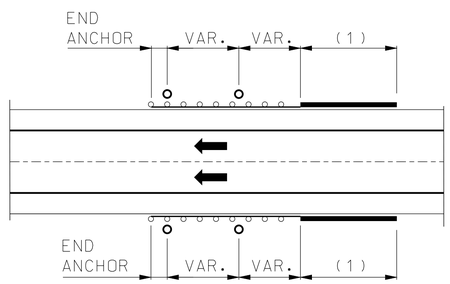


SHOULDER INSTALLATION WITH DIVIDED PAVEMENT

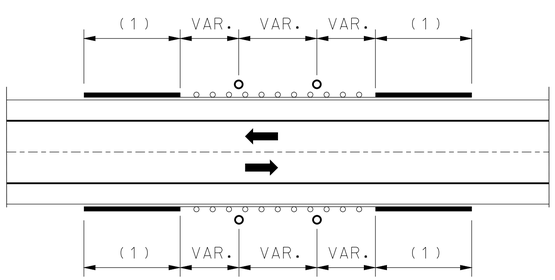


SHOULDER INSTALLATION WITH TWO-WAY PAVEMENT

AT OBSTACLES

FOR MULTIPLE OBSTACLES - SPECIFY VAR. IN 12'-6" INCREMENTS.

## GUARDRAIL LOCATIONS

LEGEND

GUARDRAIL

OBSTACLE

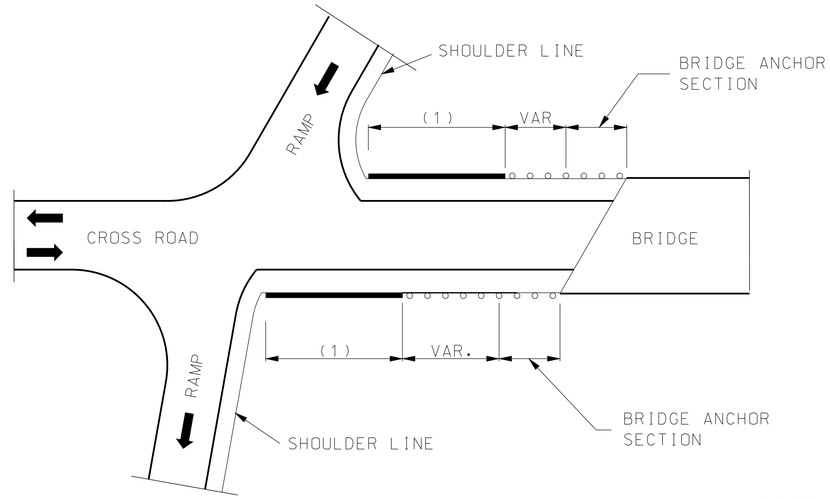


BRIDGE ENDS

## GUARDRAIL LOCATION AT INTERCHANGE

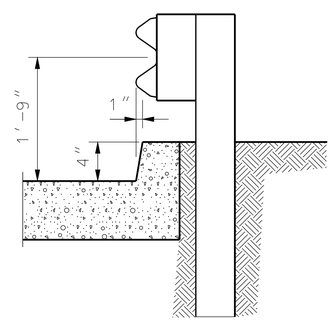


GUARDRAIL AT CURBS (3)

(1) APPROVED TYPE A CRASHWORTHY END TERMINAL.
(2) SHOULDER WIDENING SHALL CONSIST OF EMBANKMENT MATERIAL COMPACTED IN ACCORDANCE WITH SECTION 203.4 OF THE STANDARD SPECIFICATIONS.
(3) WHEN GUARDRAIL IS CONSTRUCTED OVER CURBS, THE CURBS SHALL BE CONSTRUCTED AS SHOWN.

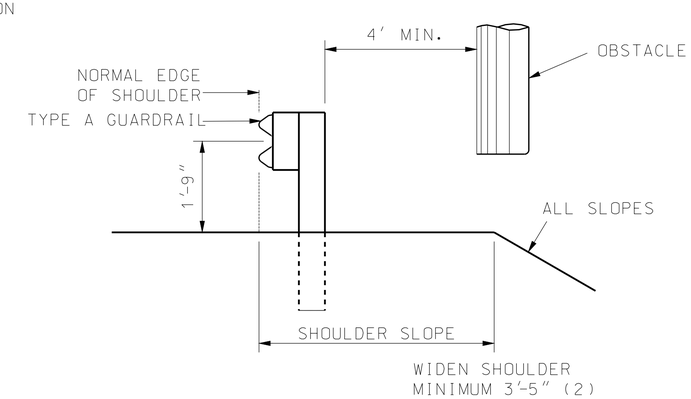


LOCATION OTHER THAN ℄ MEDIAN

LATERAL PLACEMENT OF GUARDRAIL FOR SHOULDER INSTALLATION

28" GUARDRAIL
SPECIAL SHEET
2 OF 19

"THIS MEDIA SHOULD NOT BE CONSIDERED A CERTIFIED DOCUMENT."

| | |
|---|---|
| DATE PREPARED | 12/13/2012 |
| ROUTE | 35/70 |
| STATE | MO |
| DISTRICT | KC |
| SHEET NO. | 8 |
| COUNTY | JACKSON |
| JOB NO. | J4I2371 |
| CONTRACT ID. | |
| PROJECT NO. | |
| BRIDGE NO. | L07816, L07817 |

DESCRIPTION

DATE

MISSOURI HIGHWAYS AND TRANSPORTATION COMMISSION

105 WEST CAPITOL
JEFFERSON CITY, MO 65102
1-888-ASK-MODOT (1-888-275-6636)

IF A SEAL IS PRESENT ON THIS SHEET IT HAS BEEN ELECTRONICALLY SEALED AND DATED.

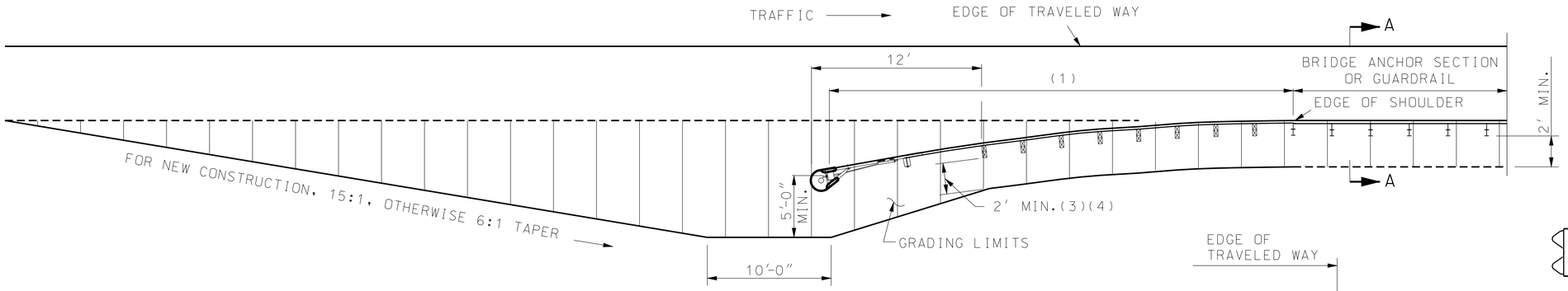


## GRADING LIMITS FOR TYPE A FLARED CRASHWORTHY END TERMINAL

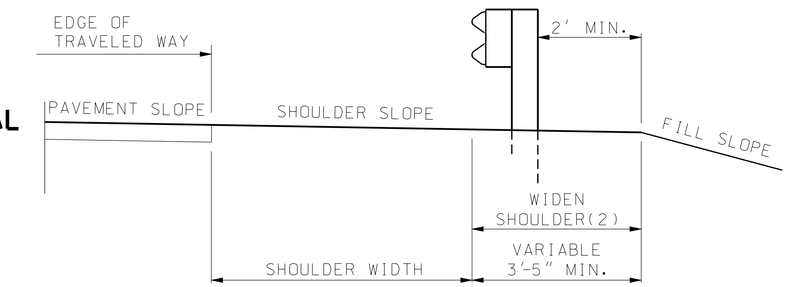


## SECTION A-A

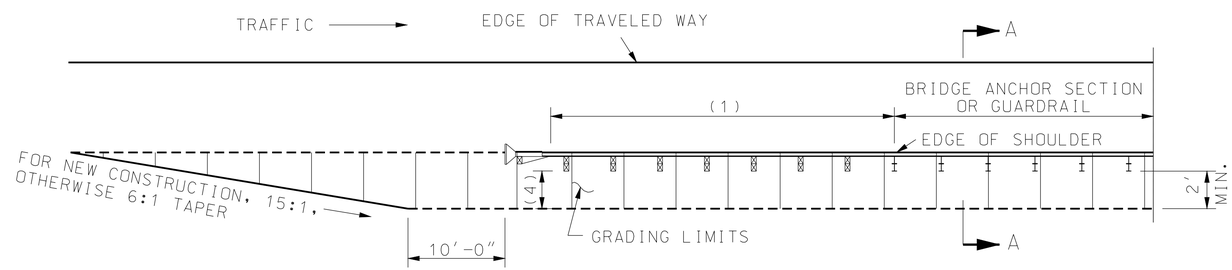


## GRADING LIMITS FOR TYPE A NON-FLARED CRASHWORTHY END TERMINAL

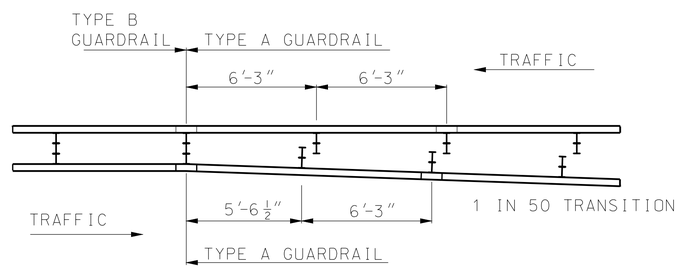


## DETAIL FOR TRANSITIONING BETWEEN TYPE A AND TYPE B GUARDRAIL

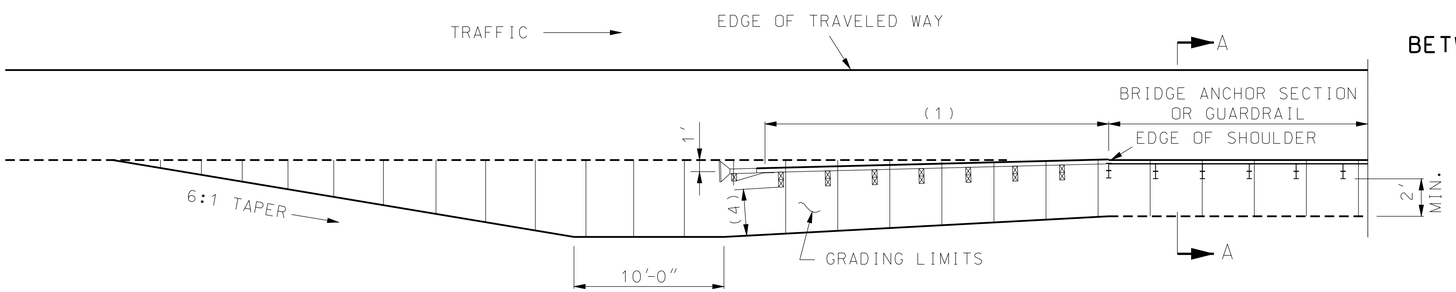


## GRADING LIMITS FOR TYPE A NON-FLARED OFFSET CRASHWORTHY END TERMINAL

GENERAL NOTES:

THE CONTRACTOR SHALL PROVIDE THE ENGINEER WITH APPROVED SHOP DRAWINGS OF THE APPROVED CRASH-WORTHY END TERMINAL.

END ANCHORS SHALL BE INSTALLED ON ENDS OF GUARDRAIL RUNS WHERE CRASHWORTHY END TERMINAL IS NOT REQUIRED.

(1) APPROVED TYPE A CRASHWORTHY END TERMINAL.
(2) SHOULDER WIDENING SHALL CONSIST OF EMBANKMENT MATERIAL COMPACTED IN ACCORDANCE WITH SECTION 203.4 OF THE STANDARD SPECIFICATIONS.
(3) THE SLOPE SHOULD BREAK BEHIND THIRD POST.
(4) AS PER MANUFACTURER'S SPECIFICATIONS, 2' MINIMUM. NO DIRECT PAY.

28" GUARDRAIL
SPECIAL SHEET
3 OF 19

"THIS MEDIA SHOULD NOT BE CONSIDERED A CERTIFIED DOCUMENT."

| | |
|---|---|
| DATE PREPARED | 12/13/2012 |
| ROUTE | 35/70 |
| STATE | MO |
| DISTRICT | KC |
| SHEET NO. | 9 |
| COUNTY | JACKSON |
| JOB NO. | J4I2371 |
| CONTRACT ID. | |
| PROJECT NO. | |
| BRIDGE NO. | L07816, L07817 |

DESCRIPTION

DATE

MISSOURI HIGHWAYS AND TRANSPORTATION COMMISSION
105 WEST CAPITOL
JEFFERSON CITY, MO 65102
1-888-ASK-MODOT (1-888-275-6636)

IF A SEAL IS PRESENT ON THIS SHEET IT HAS BEEN ELECTRONICALLY SEALED AND DATED.

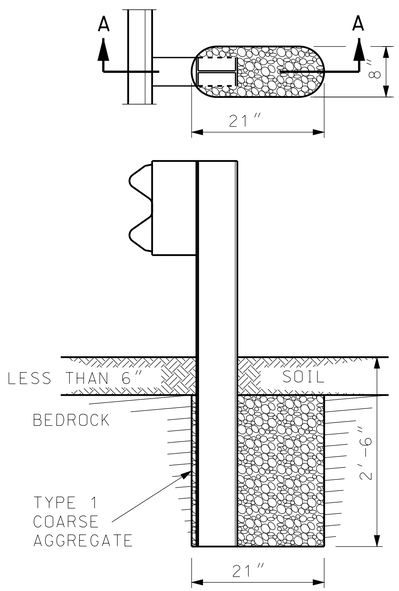


SECTION A-A
ROCK ENCOUNTERED
UP TO 6″ BENEATH SURFACE

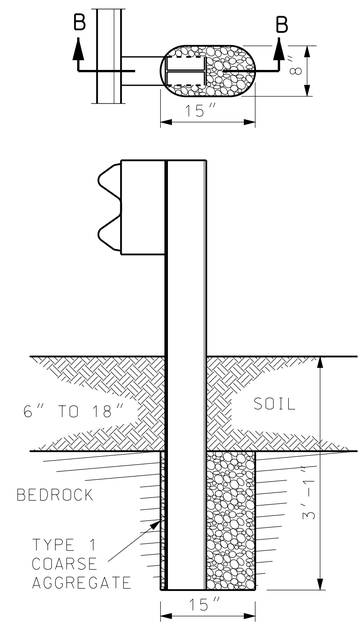


SECTION B-B
ROCK ENCOUNTERED
6″ TO 18″ BENEATH SURFACE

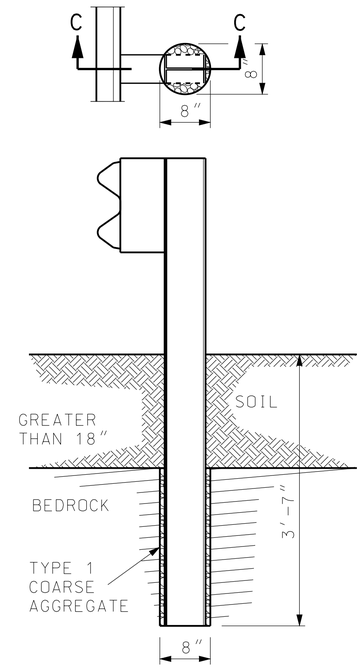


SECTION C-C
ROCK ENCOUNTERED MORE
THAN 18″ BENEATH SURFACE

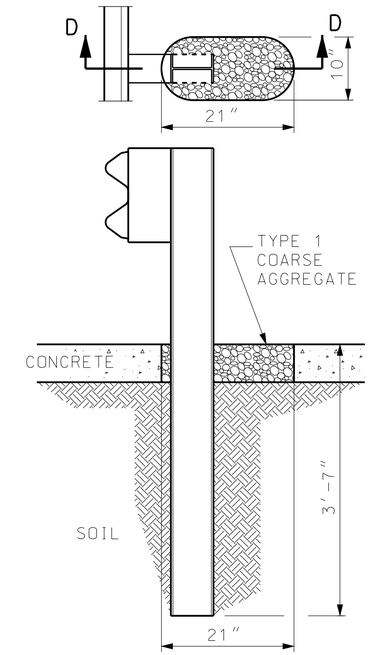


SECTION D-D

## SETTING POST THROUGH CONCRETE

## SETTING POST IN SOLID ROCK

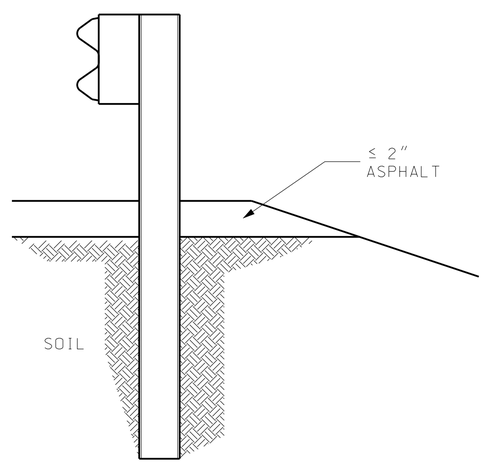


## SETTING POST THROUGH ASPHALT

GENERAL NOTES:

HOLES IN SOLID ROCK SHALL PROVIDE A DIAMETER OF NOT LESS THAN 4 INCHES GREATER THAN THE MAXIMUM TRANSVERSE DIMENSION OF THE POST SECTION.

POST MAY BE SHORTER WHERE PLACED IN 2 FEET OF SOLID ROCK. STEEL POSTS MAY BE FLAME OR SAW CUT. REPAIR OF CUT SHALL BE IN ACCORDANCE WITH SECTION 712 OF THE STANDARD SPECIFICATIONS.

28″ GUARDRAIL
SETTING POST IN SOLID
ROCK AND THROUGH
CONCRETE OR ASPHALT
SPECIAL SHEET
4 OF 19

"THIS MEDIA SHOULD NOT BE CONSIDERED A CERTIFIED DOCUMENT."

| | |
|---|---|
| DATE PREPARED | 12/13/2012 |
| ROUTE | 35/70 |
| STATE | MO |
| DISTRICT | KC |
| SHEET NO. | 10 |
| COUNTY | JACKSON |
| JOB NO. | J4I2371 |
| CONTRACT ID. | |
| PROJECT NO. | |
| BRIDGE NO. | L07816, L07817 |

| DATE | DESCRIPTION |
|---|---|
| | |

MISSOURI HIGHWAYS AND TRANSPORTATION COMMISSION
105 WEST CAPITOL
JEFFERSON CITY, MO 65102
1-888-ASK-MODOT (1-888-275-6636)

IF A SEAL IS PRESENT ON THIS SHEET IT HAS BEEN ELECTRONICALLY SEALED AND DATED.

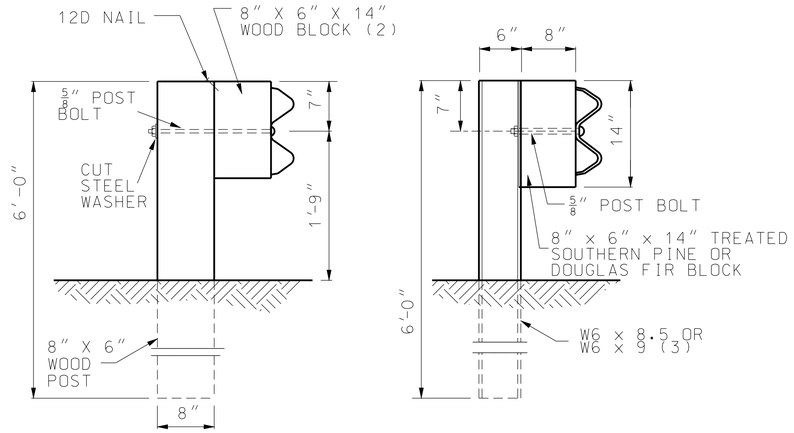


WOOD POST AND
WOOD OR PLASTIC BLOCK

STEEL POST AND
WOOD OR PLASTIC BLOCK

## TYPE A AND D GUARDRAIL

(1) END TREATMENT AS SPECIFIED ON PLANS.
(2) AN ALTERNATE DESIGN, AN 8" X 4" X 14" WOOD BLOCK, MAY BE USED
(3) THE CONTRACTOR MAY FURNISH EQUIVALENT SECTIONS FABRICATED FROM MATERIAL MEETING AND IN ACCORDANCE WITH SECTION 1040.

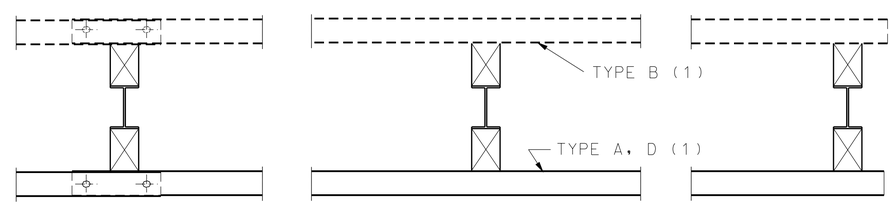


PLAN

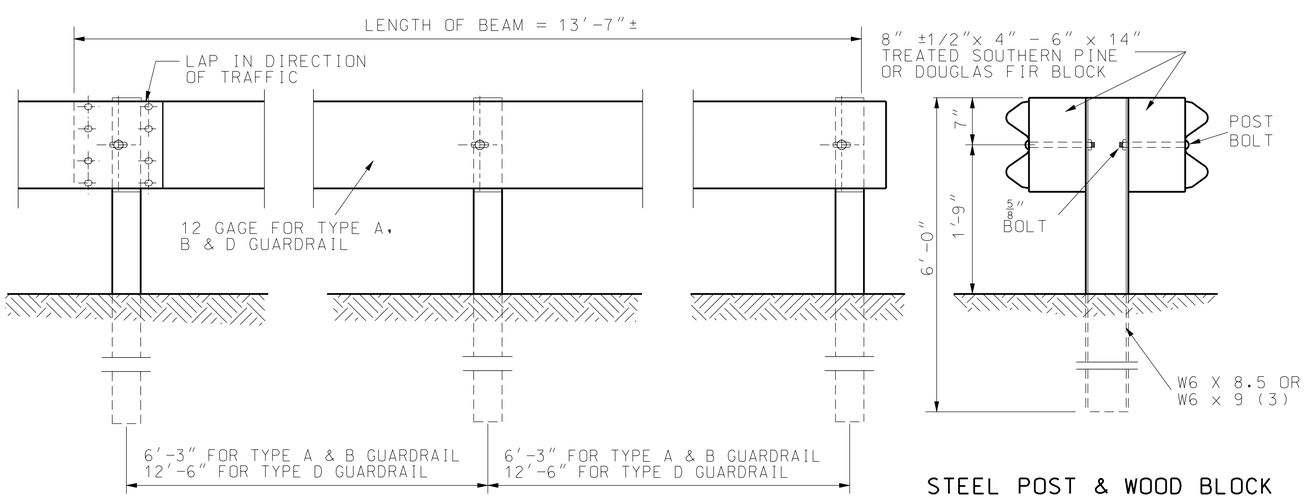


ELEVATION

STEEL POST & WOOD BLOCK

NOTE:
FOR TYPE E GUARDRAIL AND TRANSITION DETAILS SEE SHEET 8 OF 17.

## TYPE B GUARDRAIL

GENERAL NOTES:

WASHERS SHALL BE OMITTED ON ALL CONNECTIONS ON TYPE A, B AND D GUARDRAIL.

ALL DIMENSIONS ARE SUBJECT TO MANUFACTURING TOLERANCES EXCEPT WHERE ALLOWABLE TOLERANCES ARE SHOWN.

28" GUARDRAIL
TYPES A, B AND D
SPECIAL SHEET
5 OF 19

"THIS MEDIA SHOULD NOT BE CONSIDERED A CERTIFIED DOCUMENT."

| | |
|---|---|
| DATE PREPARED | 12/13/2012 |
| ROUTE | 35/70 |
| STATE | MO |
| DISTRICT | KC |
| SHEET NO. | XX |
| COUNTY | JACKSON |
| JOB NO. | J4I2371 |
| CONTRACT ID. | |
| PROJECT NO. | |
| BRIDGE NO. | L07816, L07817 |

| DATE | DESCRIPTION |
|---|---|
| | |

MISSOURI HIGHWAYS AND TRANSPORTATION COMMISSION
105 WEST CAPITOL
JEFFERSON CITY, MO 65102
1-888-ASK-MODOT (1-888-275-6636)

IF A SEAL IS PRESENT ON THIS SHEET IT HAS BEEN ELECTRONICALLY SEALED AND DATED.

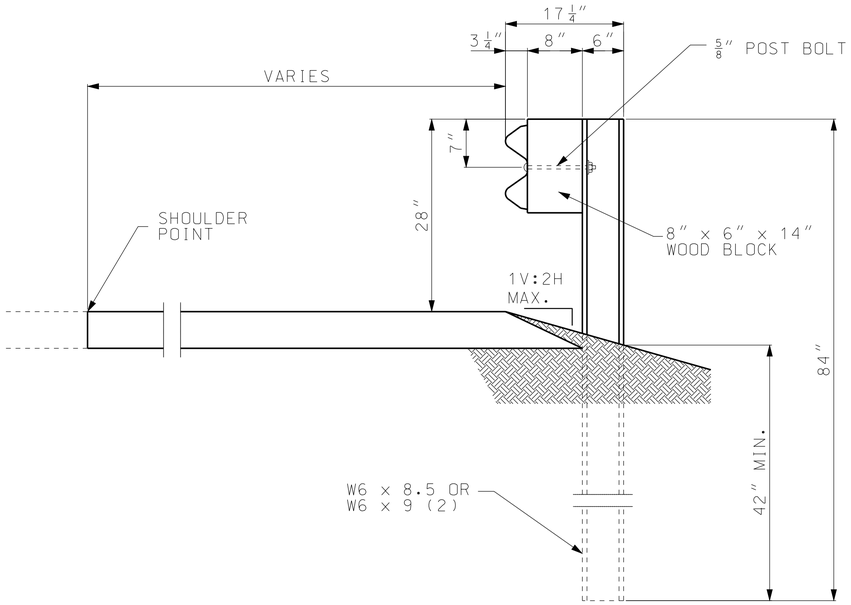


## STEEL POST AND WOOD BLOCK TYPICAL SECTION

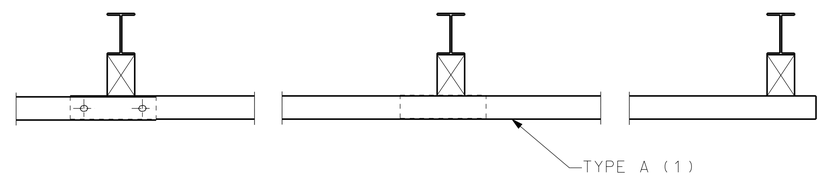


## PLAN

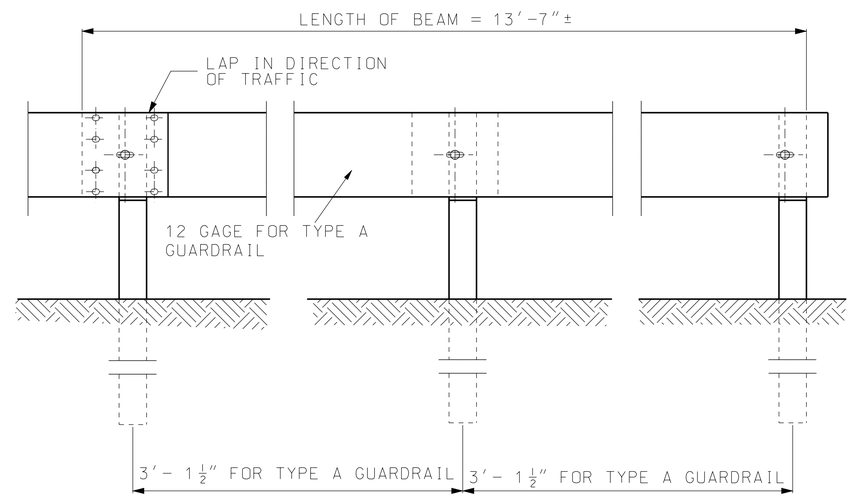


## ELEVATION

GENERAL NOTES:

WASHERS SHALL BE OMITTED ON ALL CONNECTIONS ON TYPE A GUARDRAIL.

POST MAY BE WOOD OR STEEL WITH ONLY ONE MATERIAL ALLOWED WITHIN A SINGLE PROJECT, EXCEPT FOR END TREATMENTS.

ALL DIMENSIONS ARE SUBJECT TO MANUFACTURING TOLERANCES EXCEPT WHERE ALLOWABLE TOLERANCES ARE SHOWN.

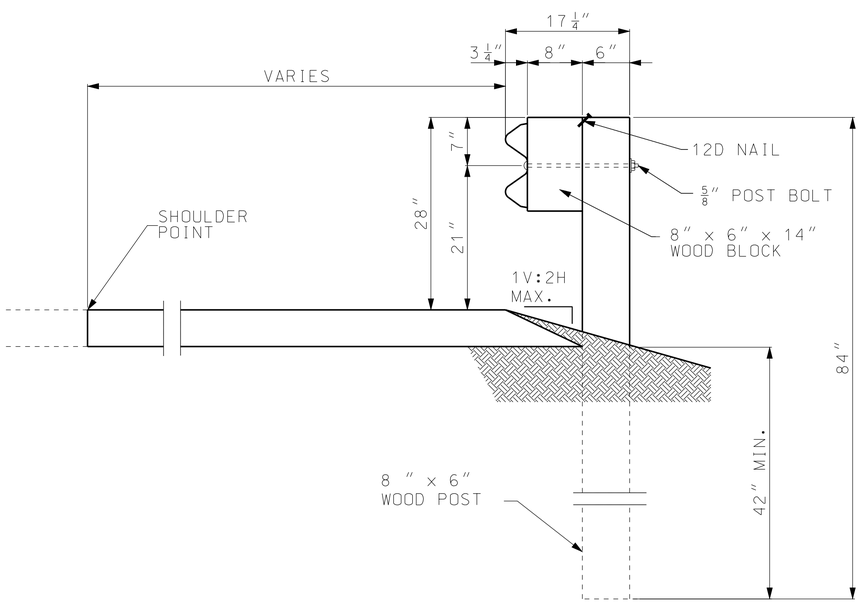


## WOOD POST AND BLOCK TYPICAL SECTION

NOTE:

(1) END TREATMENT AS SPECIFIED ON PLANS

(2) POST EMBEDDED A MINIMUM OF 42" IN SOIL.

28" GUARDRAIL
7 FT. POST
SPECIAL SHEET
6 OF 19

"THIS MEDIA SHOULD NOT BE CONSIDERED A CERTIFIED DOCUMENT."

| | |
|---|---|
| DATE PREPARED | 12/13/2012 |
| ROUTE | 35/70 |
| STATE | MO |
| DISTRICT | KC |
| SHEET NO. | 12 |
| COUNTY | JACKSON |
| JOB NO. | J4I2371 |
| CONTRACT ID. | |
| PROJECT NO. | |
| BRIDGE NO. | L07816, L07817 |

| DESCRIPTION | DATE |
|---|---|
| | |

MISSOURI HIGHWAYS AND TRANSPORTATION COMMISSION

105 WEST CAPITOL
JEFFERSON CITY, MO 65102
1-888-ASK-MODOT (1-888-275-6636)

IF A SEAL IS PRESENT ON THIS SHEET IT HAS BEEN ELECTRONICALLY SEALED AND DATED.

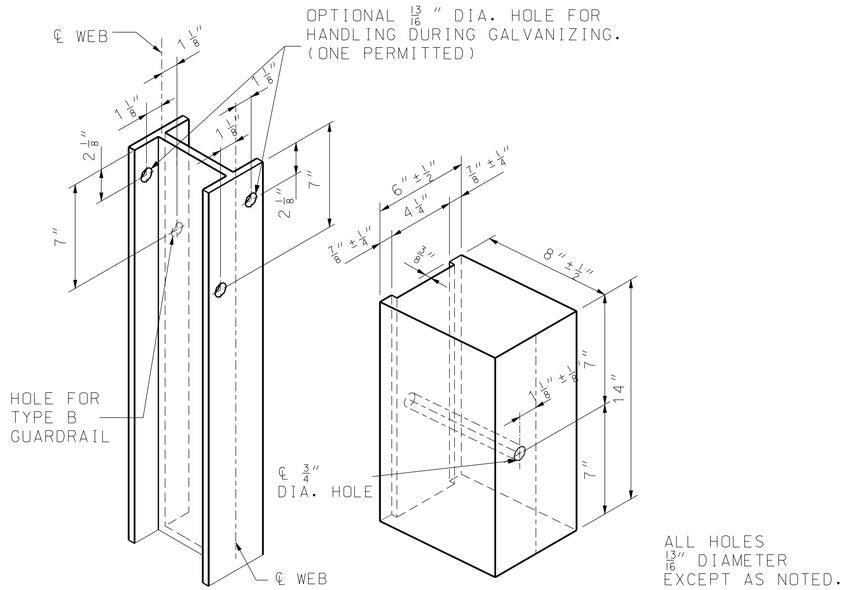


## HOLE PUNCHING DETAIL
FOR STEEL POST AND WOOD OR PLASTIC BLOCKS (1)

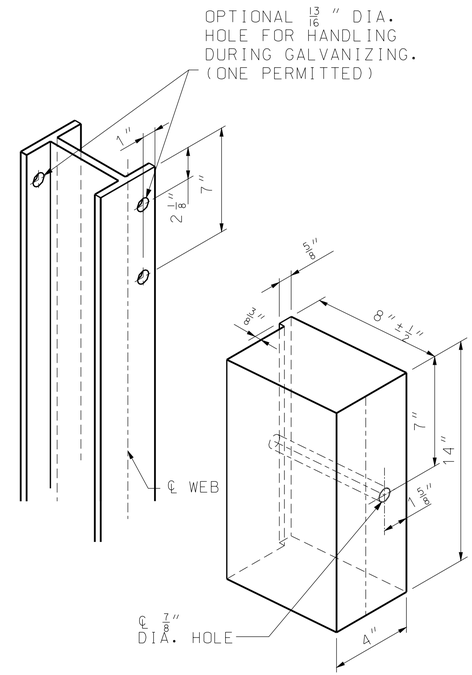


## ALTERNATE DESIGN FOR WOOD BLOCK

(1) THE OVERALL NOMINAL DIMENSIONS SHOWN SHALL BE MET, ALTHOUGH THE SHAPE OF THE PLASTIC BLOCKS MAY VARY FROM THE SHAPE SHOWN, EXCEPT THE 7/8" ±1/4" FLANGE AND THE OVERALL WIDTH DIMENSIONS MAY BE WAIVED IF APPROVED BY PROJECT OPERATIONS.

28" GUARDRAIL
SPECIAL SHEET
7 OF 19

"THIS MEDIA SHOULD NOT BE CONSIDERED A CERTIFIED DOCUMENT."

| | |
|---|---|
| DATE PREPARED | 12/13/2012 |
| ROUTE | 35/70 |
| STATE | MO |
| DISTRICT | KC |
| SHEET NO. | 13 |
| COUNTY | JACKSON |
| JOB NO. | J4I2371 |
| CONTRACT ID. | |
| PROJECT NO. | |
| BRIDGE NO. | L07816, L07817 |

| DATE | DESCRIPTION |
|---|---|
| | |

MISSOURI HIGHWAYS AND TRANSPORTATION COMMISSION
105 WEST CAPITOL
JEFFERSON CITY, MO 65102
1-888-ASK-MODOT (1-888-275-6636)

IF A SEAL IS PRESENT ON THIS SHEET IT HAS BEEN ELECTRONICALLY SEALED AND DATED.

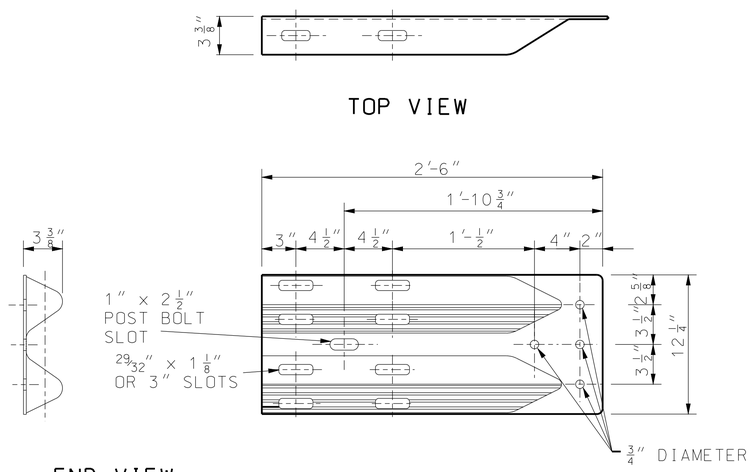


## TERMINAL CONNECTOR

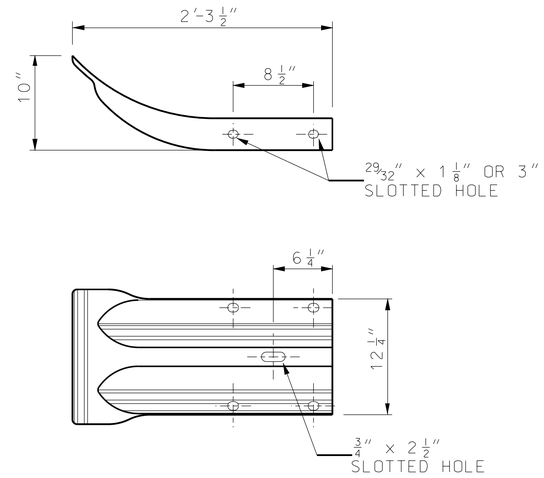


## END SECTION
12 GAGE

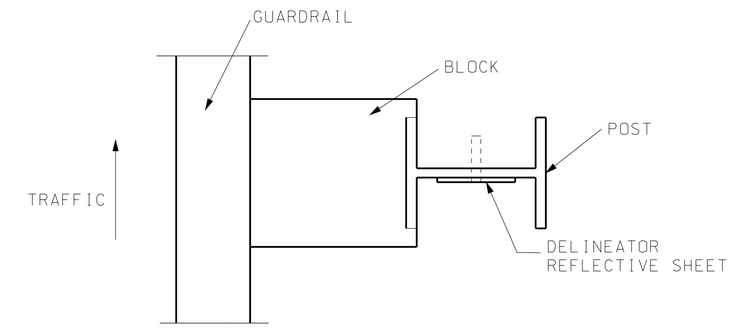


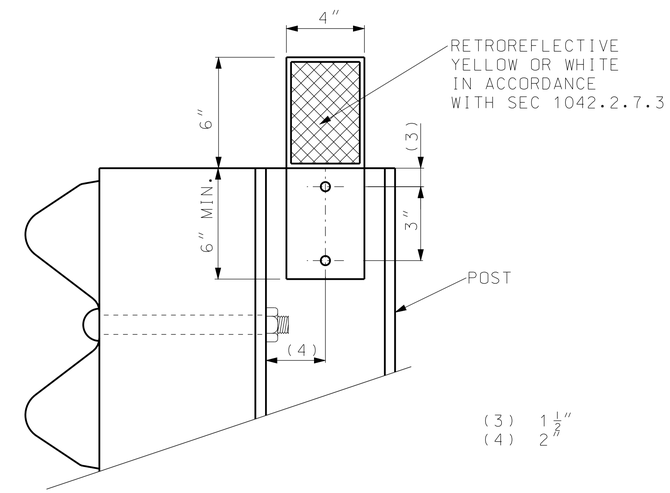


DELINEATORS SHALL BE AFFIXED WITH 1 1/2" LONG X 1/4" DIAMETER BOLTS FOR STEEL POSTS OR 2" (MIN.) LONG X 1/4" DIAMETER SCREWS FOR WOOD POSTS. THE DIAMETER OF THE BOLT'S OR SCREW'S HEAD SHALL BE TWICE THE DIAMETER OF THE HOLE, WITH A MINIMUM OF 1/2". WASHERS SHALL BE USED WITH THE BOLTS AND SHALL HAVE 1/2" DIAMETER HOLES.

## DELINEATORS ON NEW GUARDRAIL

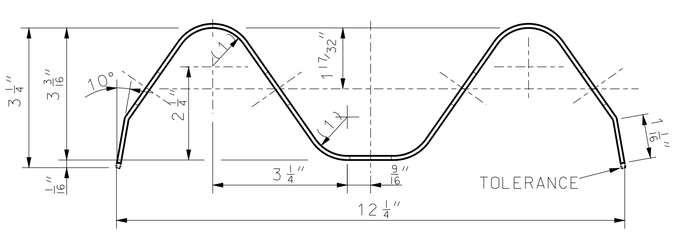


## SECTION THROUGH BEAM

(1) 15/16" RADIUS

(2) 2" (TOLERANCE +1 1/4", -1/4")

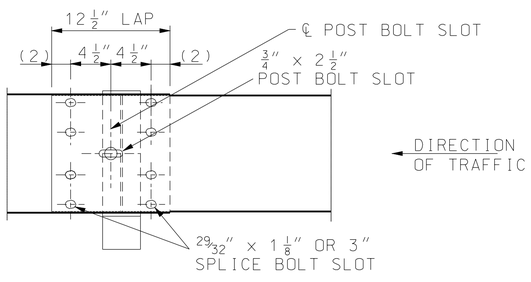


## BEAM SPLICE AT POST
## TYPE A, B AND D GUARDRAIL

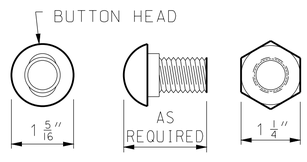


OVAL SHOULDER SHALL BE OF ADEQUATE HEIGHT, LENGTH & SHAPE TO PREVENT TURNING DURING INSTALLATION OR REMOVAL OF BOLT.

## 5/8" POST OR SPLICE BOLT

NOTE: PORTIONS OF BEAM WITH UNUSED BOLT SLOTS TO BE LAPPED BEHIND.

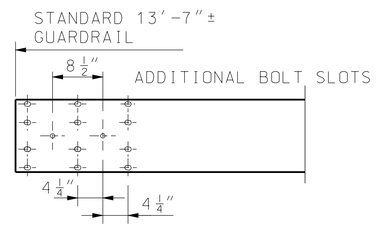


BEAM DETAILS SHOWING LOCATION OF ADDITIONAL BOLT SLOTS NECESSARY TO OBTAIN GUARDRAIL OFFSET.

28" GUARDRAIL
SPECIAL SHEET
8 OF 19

"THIS MEDIA SHOULD NOT BE CONSIDERED A CERTIFIED DOCUMENT."

| | |
|---|---|
| DATE PREPARED | 12/13/2012 |
| ROUTE | 35/70 |
| STATE | MO |
| DISTRICT | KC |
| SHEET NO. | 14 |
| COUNTY | JACKSON |
| JOB NO. | J4I2371 |
| CONTRACT ID. | |
| PROJECT NO. | |
| BRIDGE NO. | L07816, L07817 |

DESCRIPTION

DATE

MISSOURI HIGHWAYS AND TRANSPORTATION COMMISSION

105 WEST CAPITOL
JEFFERSON CITY, MO 65102
1-888-ASK-MODOT (1-888-275-6636)

IF A SEAL IS PRESENT ON THIS SHEET IT HAS BEEN ELECTRONICALLY SEALED AND DATED.

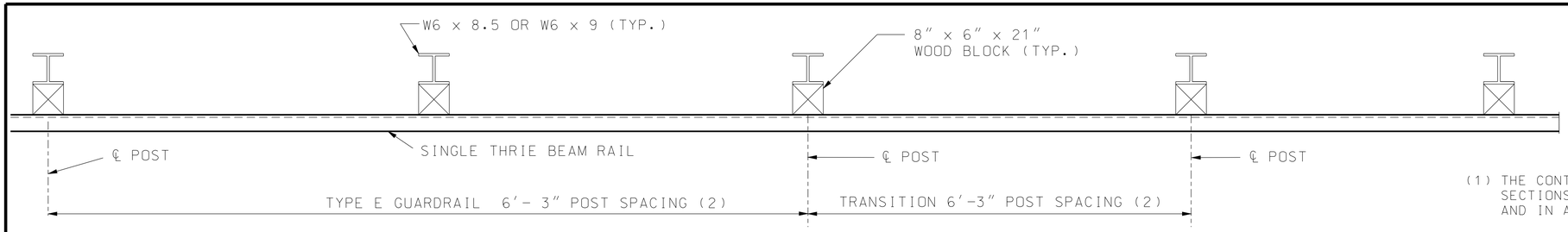


## PLAN

(1) THE CONTRACTOR MAY FURNISH EQUIVALENT SECTIONS FABRICATED FROM MATERIAL MEETING AND IN ACCORDANCE WITH SECTION 1040.

(2) IF THE TRANSITION IS CONNECTED TO A BRIDGE ANCHOR SECTION, POST SPACING FOR TYPE E GUARDRAIL AND THE TRANSITION SECTION SHALL BE 3′-1 1/4″ . FOR ALL OTHER CASES, POST SPACING SHALL BE 6′-3″.

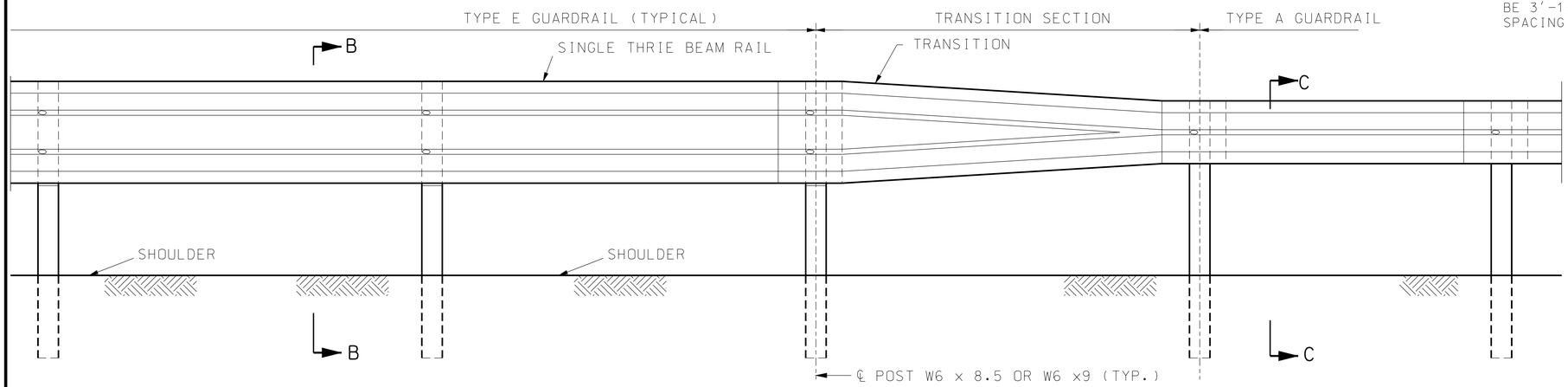


## PART SECTION SHOWING TYPE E TO TYPE A GUARDRAIL TRANSITION

GENERAL NOTES:

-TYPE E GUARDRAIL SHALL USE 6′-3″ POST SPACING UNLESS 3′-1 1/2″ POST IS SPECIFIED.
-THE THRIE BEAM RAIL FOR THE TYPE E GUARDRAIL AND THE TRANSITION SECTION SHALL BE MADE OF STEEL AND SHALL BE 12 GUAGE.
-FOR PROTECTIVE COATING AND MATERAL REQUIREMENTS, SEE SECTION 1040 OF THE STANDARD SPECIFICATIONS.
-SEE SHEET 3 OF 13 FOR REQUIREMENTS FOR SETTING POSTS AT OBSTRUCTIONS.
-ALL DIMENSIONS ARE SUBJECT TO MANUFACTURING TOLERANCES EXCEPT WHERE ALLOWABLE TOLERANCES ARE SHOWN.
-FOR DETAILS NOT SHOWN, SEE OTHER SHEETS OF THIS DRAWING.

THE OVERALL NOMINAL DIMENSIONS SHOWN SHALL BE MET, ALTHOUGH THE SHAPE OF THE PLASTIC BLOCKS MAY VARY FROM THE SHAPE SHOWN, EXCEPT THE 7/8″ ±1/4″ FLANGE AND THE OVERALL WIDTH DIMENSIONS MAY BE WAIVED IF APPROVED BY PROJECT OPERATIONS.

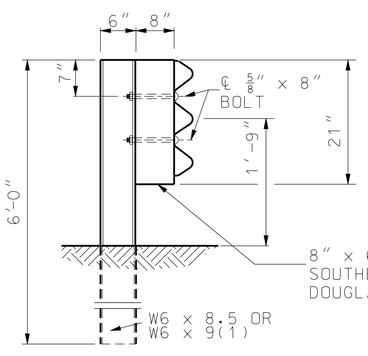


NOTE: BLOCKS SHALL BE THE SAME TYPE THROUGHOUT THE PROJECT LIMITS.

ALL HOLES 13/16″ DIAMETER EXCEPT AS NOTED

SECTION B-B
FOR WOOD BLOCKS

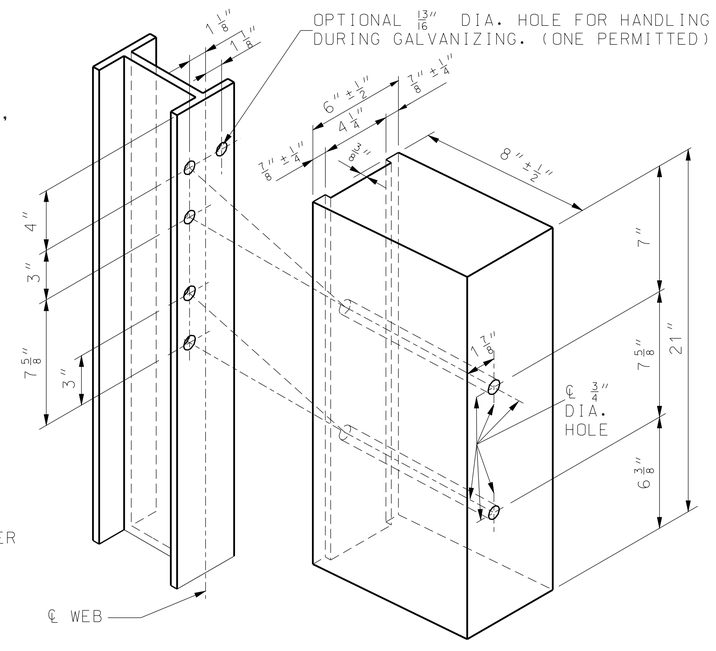


## HOLE PUNCHING DETAIL
FOR STEEL POST & WOOD OR PLASTIC BLOCKS

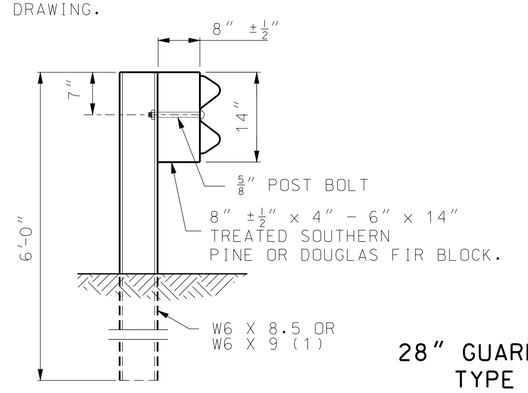


SECTION C-C
FOR WOOD BLOCKS

28″ GUARDRAIL
TYPE E
SPECIAL SHEET
9 OF 19

"THIS MEDIA SHOULD NOT BE CONSIDERED A CERTIFIED DOCUMENT."

| | |
|---|---|
| DATE PREPARED | 12/13/2012 |
| ROUTE | 35/70 |
| STATE | MO |
| DISTRICT | KC |
| SHEET NO. | 15 |
| COUNTY | JACKSON |
| JOB NO. | J4I2371 |
| CONTRACT ID. | |
| PROJECT NO. | |
| BRIDGE NO. | L07816, L07817 |

DESCRIPTION

DATE

MISSOURI HIGHWAYS AND TRANSPORTATION COMMISSION
105 WEST CAPITOL
JEFFERSON CITY, MO 65102
1-888-ASK-MODOT (1-888-275-6636)

IF A SEAL IS PRESENT ON THIS SHEET IT HAS BEEN ELECTRONICALLY SEALED AND DATED.

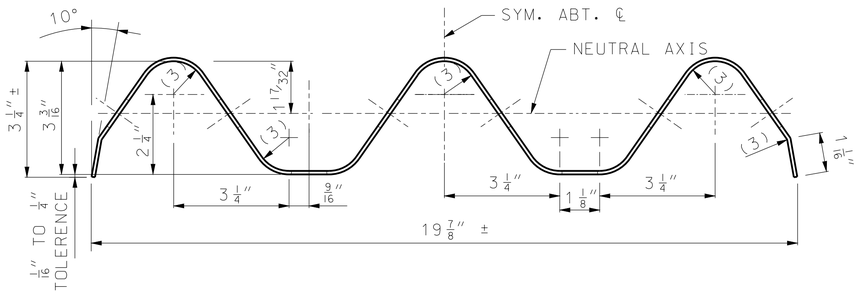


## SECTION THRU THRIE BEAM RAIL

(1) 2" (TOLERANCE +1 1/4", −1/4")
(2) SHOULDER WIDENING SHALL CONSIST OF EMBANKMENT MATERIAL COMPACTED IN ACCORDANCE WITH SETION 203.4 OF STANDARD SPECIFICATION.
(3) 15/16" RADIUS

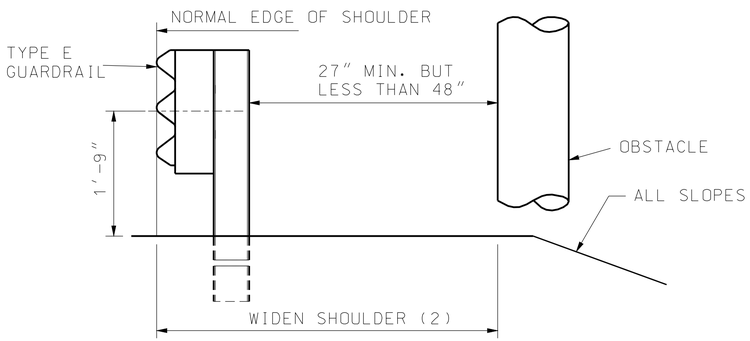


## LATERAL PLACEMENT OF TYPE E GUARDRAIL

SHOULDER ENCOACHMENT WILL BE PERMITTED TO OBTAIN MINIMUM CLEARANCE AT EXISTING OBSTACLES. A 50:1 TAPER SHALL BE USED FROM THE NORMAL SHOULDER LINE LOCATION TO THE ENCROACHMENT LOCATION AND, IF GUARDRAIL IS CONTINOUS, BACK TO THE LOCATION.

USE 25 FEET OF TYPE E GUARDRAIL PRECEDING THE OBSTACLE, AND THROUGH THE LIMITS OF THE OBSTACLE WHEN THE ABOVE CONDITION EXISTS.

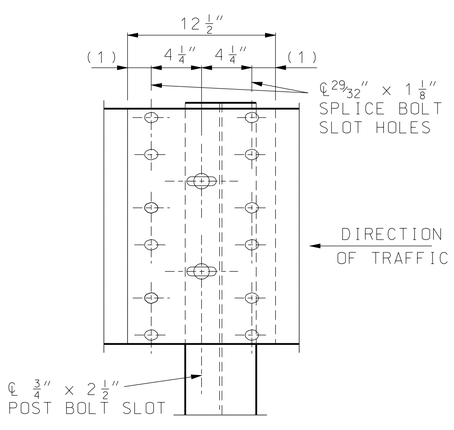


## THRIE BEAM RAIL SPLICE AT POST

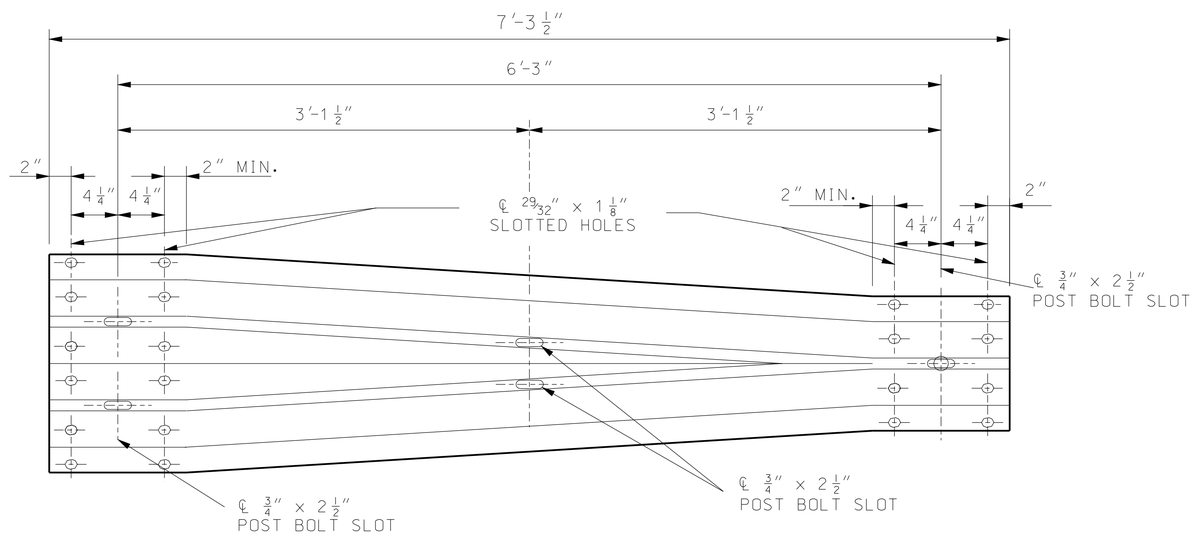


## ELEVATION OF TRANSITION SECTION

28" GUARDRAIL
TYPE E
SPECIAL SHEET
10 OF 19

"THIS MEDIA SHOULD NOT BE CONSIDERED A CERTIFIED DOCUMENT."

| | |
|---|---|
| DATE PREPARED | 12/13/2012 |
| ROUTE | 35/70 |
| STATE | MO |
| DISTRICT | KC |
| SHEET NO. | 16 |
| COUNTY | JACKSON |
| JOB NO. | J4I2371 |
| CONTRACT ID. | |
| PROJECT NO. | |
| BRIDGE NO. | L07816, L07817 |

| DESCRIPTION | DATE |
|---|---|
| | |

MISSOURI HIGHWAYS AND TRANSPORTATION COMMISSION
105 WEST CAPITOL
JEFFERSON CITY, MO 65102
1-888-ASK-MODOT (1-888-275-6636)

IF A SEAL IS PRESENT ON THIS SHEET IT HAS BEEN ELECTRONICALLY SEALED AND DATED.

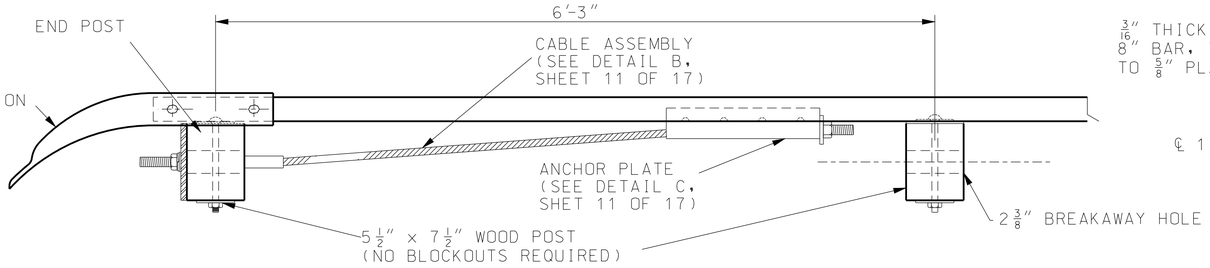


NOTE: SEE SHEET 7 OF 17 FOR DETAILS OF END SECTION.

PLAN

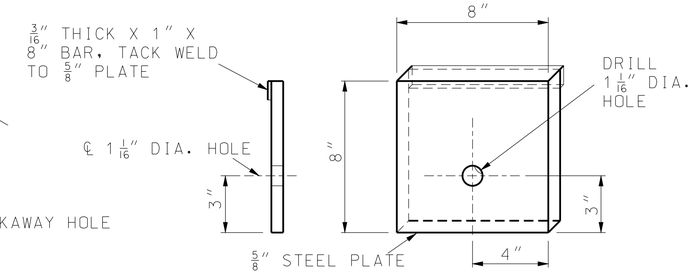


DETAIL OF STEEL BEARING PLATE

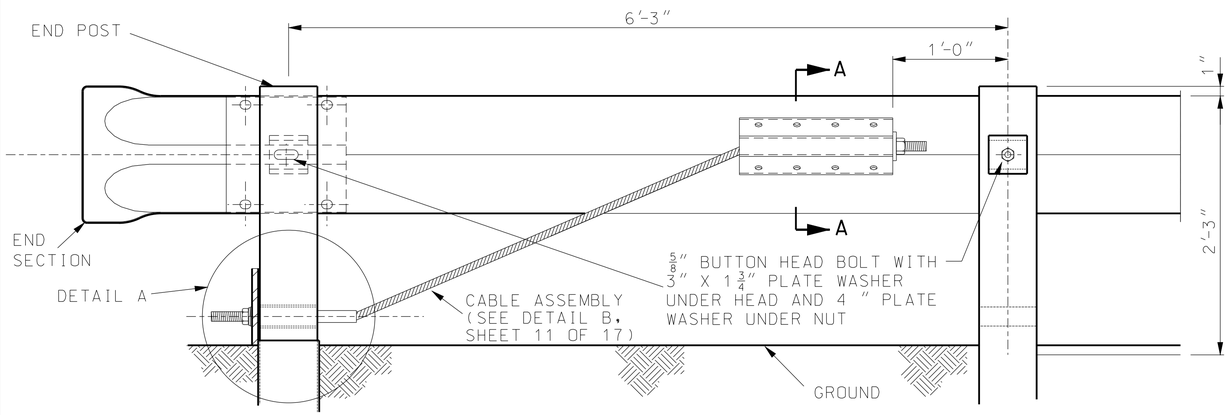


POST 1 ELEVATION (BACK SIDE) POST 2

## END ANCHOR DETAILS

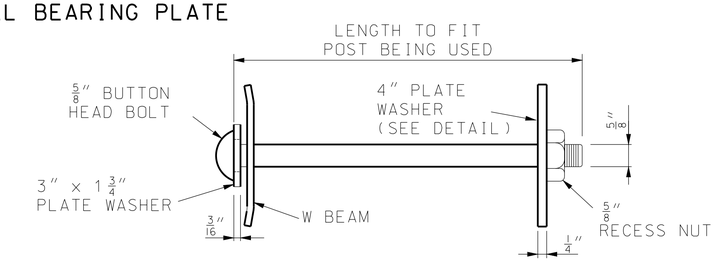


## POST BOLT ASSEMBLY

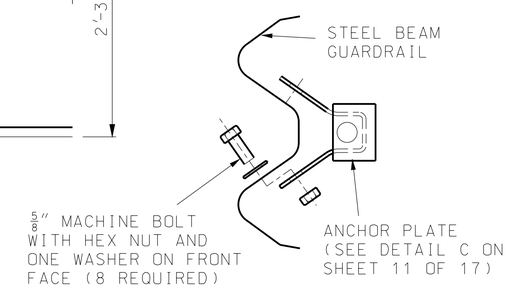


SECTION A-A

GENERAL NOTES:

END ANCHOR DETAILS SHOWN SHALL BE USED ONLY ON DOWN STREAM ENDS OF GUARDRAIL WHEN AN END ANCHOR IS REQUIRED.

THE DETAILS SHOWN ARE FOR AN END ANCHORAGE SYSTEM FOR GUARDRAIL. GUARDRAIL AND POSTS ARE PAID FOR SEPARATELY.

CABLE ASSEMBLY AND ANCHOR PLATE SHALL BE SUBJECT TO APPROVAL BY THE ENGINEER AND SHALL HAVE A MINIMUM BREAKING STRENGTH OF 20 TONS.

ALL FITTINGS AND HARDWARE REQUIRED SHALL BE GALVANIZED AFTER FABRICATION, SEE SECTION 1040 STANDARD SPECIFICATION.

WOOD POSTS 1 AND 2 SHALL BE 5 1/2" X 7 1/2".

SEE SECTION 1050 STANDARD SPECIFICATIONS FOR WOOD POST.

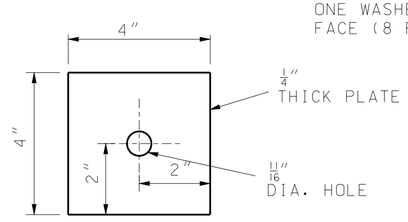


4" PLATE WASHER

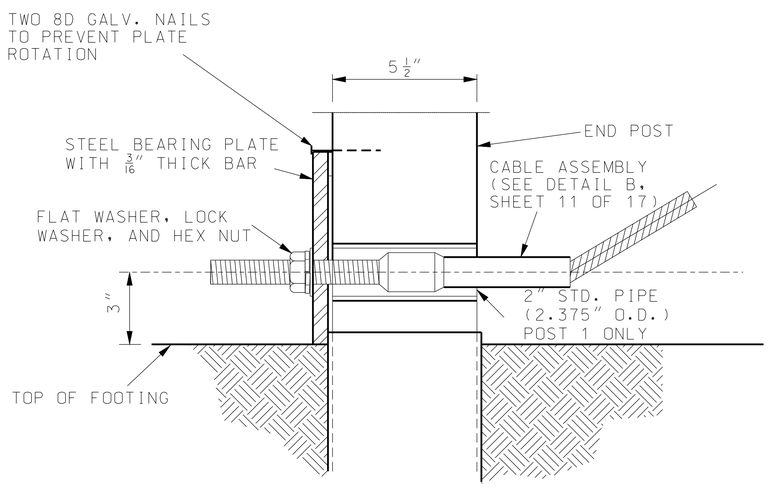


DETAIL A (END POST DETAIL)

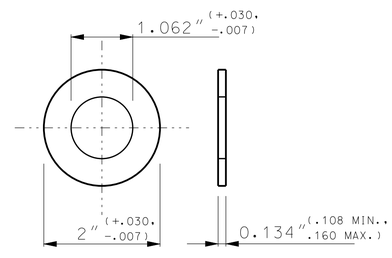


TYPE A WASHER

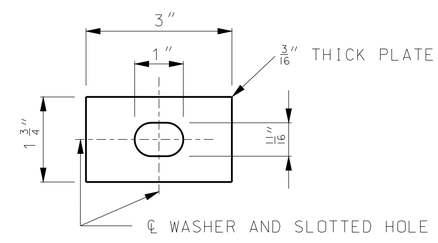


3" x 1 3/4" PLATE WASHER

28" GUARDRAIL
END ANCHOR DETAILS
SPECIAL SHEET
11 OF 19

"THIS MEDIA SHOULD NOT BE CONSIDERED A CERTIFIED DOCUMENT."

| | |
|---|---|
| DATE PREPARED | 12/13/2012 |
| ROUTE | 35/70 |
| STATE | MO |
| DISTRICT | KC |
| SHEET NO. | 17 |
| COUNTY | JACKSON |
| JOB NO. | J4I2371 |
| CONTRACT ID. | |
| PROJECT NO. | |
| BRIDGE NO. | L07816, L07817 |

DESCRIPTION

DATE

MISSOURI HIGHWAYS AND TRANSPORTATION COMMISSION

105 WEST CAPITOL
JEFFERSON CITY, MO 65102
1-888-ASK-MODOT (1-888-275-6636)

IF A SEAL IS PRESENT ON THIS SHEET IT HAS BEEN ELECTRONICALLY SEALED AND DATED.

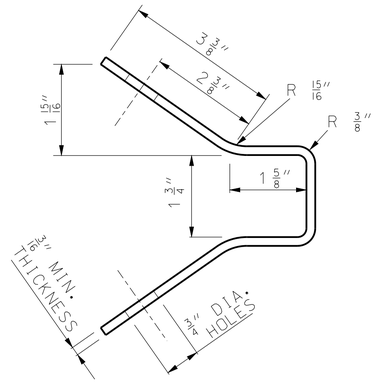


FABRICATION DETAIL

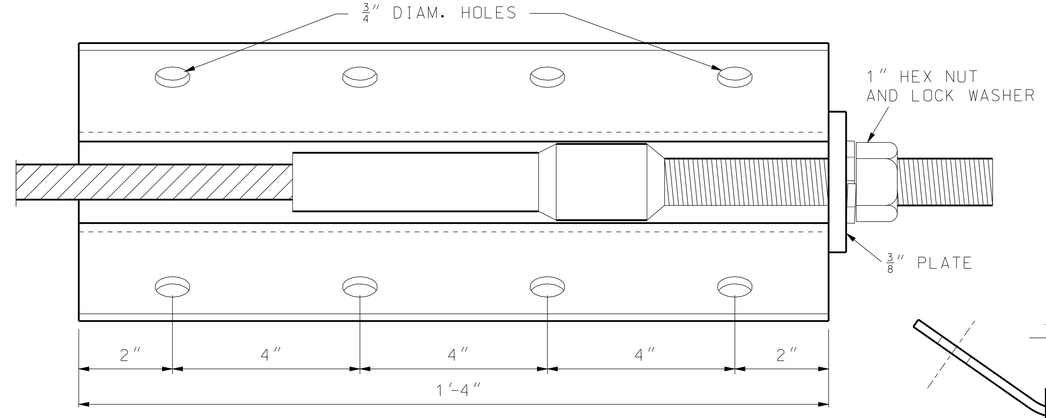


DETAIL C
ASSEMBLED VIEW
(ANCHOR PLATE)

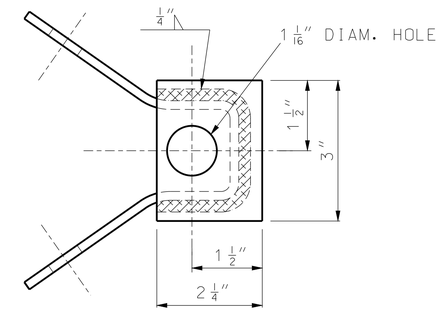


END VIEW

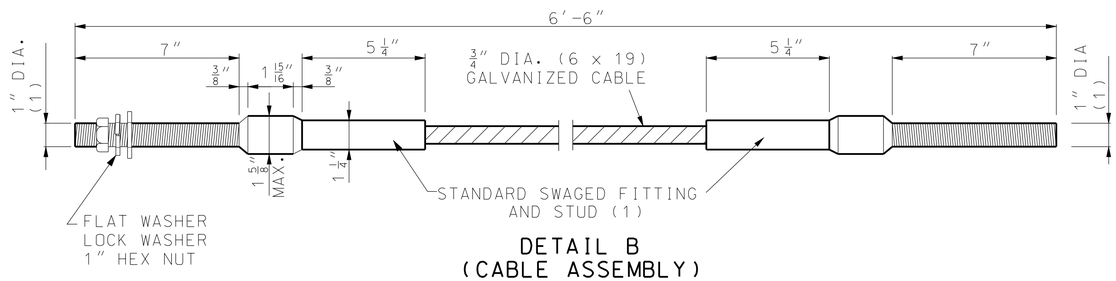


DETAIL B
(CABLE ASSEMBLY)

(1) STUD, THREADED ENTIRE LENGTH.
(2) 6'-3" SPACING FOR TYPE A OR B GUARDRAIL; $3'-1\frac{1}{2}''$ SPACING FOR TYPE E GUARDRAIL.
(3) 27" MINIMUM BUT LESS THAN 4' FOR TYPE E GUARDRAIL; 4' MINIMUM FOR TYPE A GUARDRAIL.

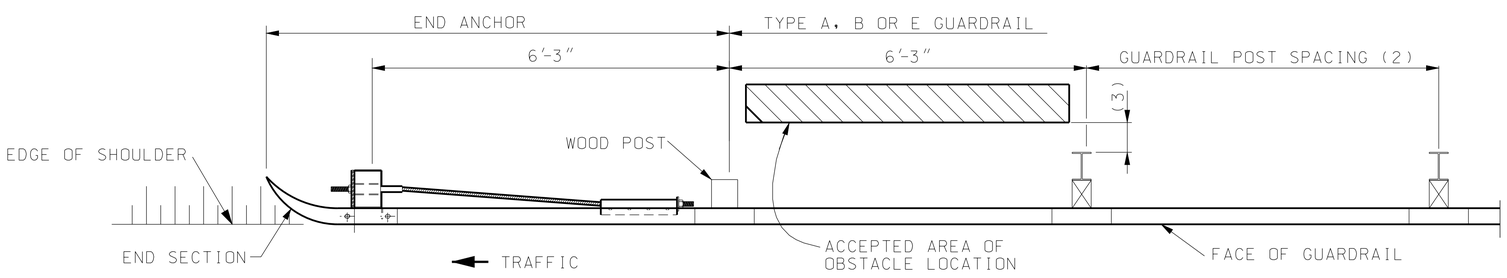


PLAN

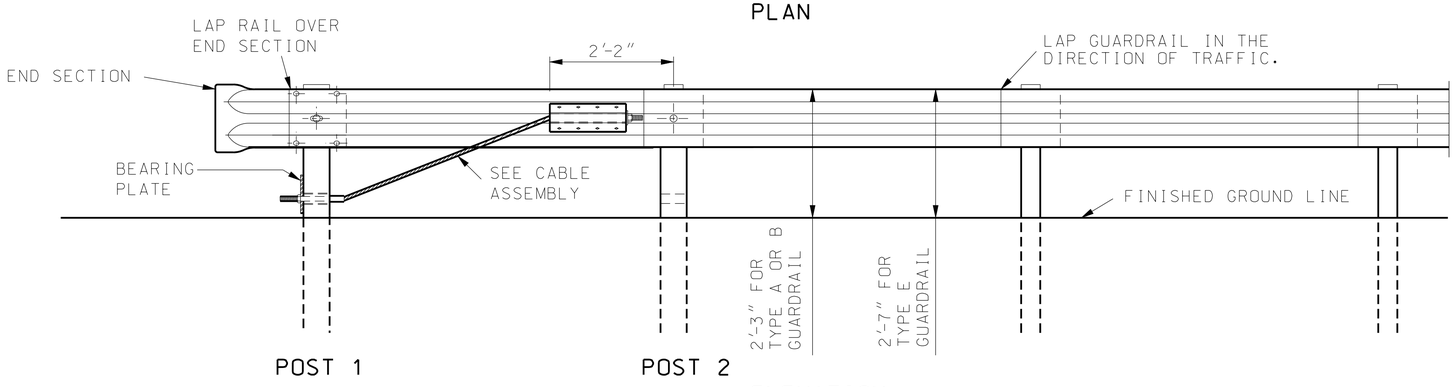


ELEVATION
**END ANCHOR**

28" GUARDRAIL
END ANCHOR DETAILS
SPECIAL SHEET
12 OF 19

"THIS MEDIA SHOULD NOT BE CONSIDERED A CERTIFIED DOCUMENT."

| | |
|---|---|
| DATE PREPARED | 12/13/2012 |
| ROUTE | 35/70 |
| STATE | MO |
| DISTRICT | KC |
| SHEET NO. | 18 |
| COUNTY | JACKSON |
| JOB NO. | J4I2371 |
| CONTRACT ID. | |
| PROJECT NO. | |
| BRIDGE NO. | L07816, L07817 |

| DATE | DESCRIPTION |
|---|---|
| | |

MISSOURI HIGHWAYS AND TRANSPORTATION COMMISSION
105 WEST CAPITOL
JEFFERSON CITY, MO 65102
1-888-ASK-MODOT (1-888-275-6636)

IF A SEAL IS PRESENT ON THIS SHEET IT HAS BEEN ELECTRONICALLY SEALED AND DATED.

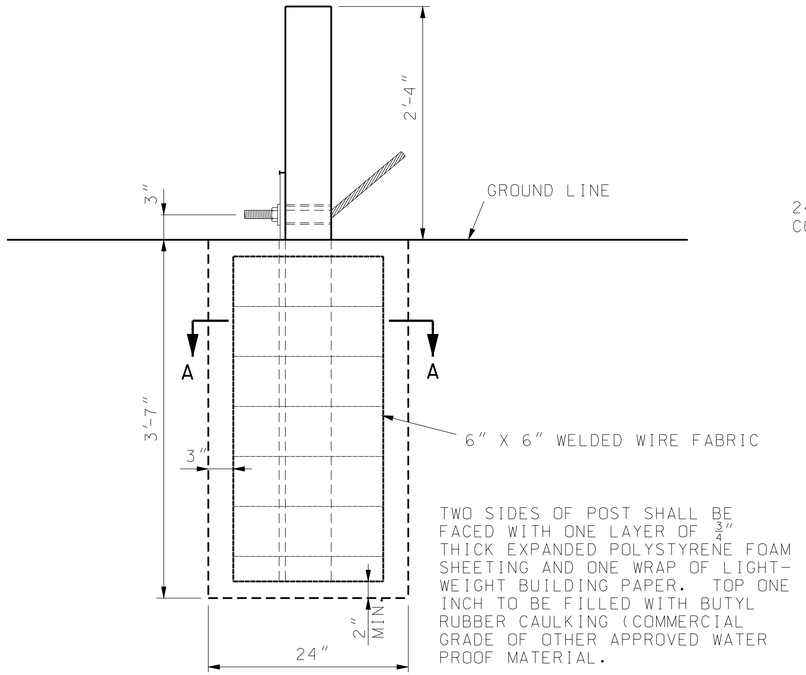


TWO SIDES OF POST SHALL BE FACED WITH ONE LAYER OF $\frac{3}{4}$" THICK EXPANDED POLYSTYRENE FOAM SHEETING AND ONE WRAP OF LIGHT-WEIGHT BUILDING PAPER. TOP ONE INCH TO BE FILLED WITH BUTYL RUBBER CAULKING (COMMERCIAL GRADE OF OTHER APPROVED WATER PROOF MATERIAL.

POST 1

## CONCRETE FOUNDATION FOR END ANCHORS

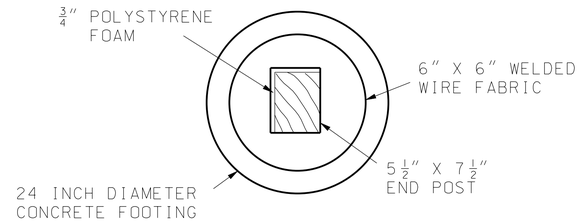


SECTION A-A
EXPANDED POLYSTYRENE FOAM INSTALLATION DETAIL

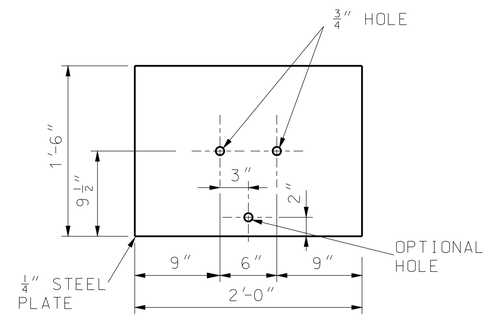


## SOIL PLATE

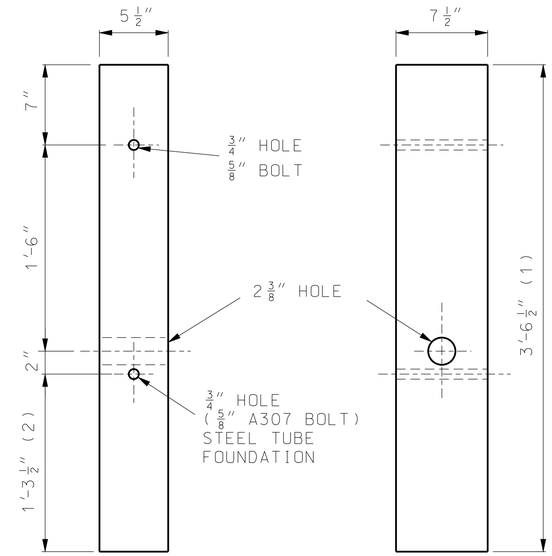


FRONT VIEW SIDE VIEW

## WOOD BREAKAWAY POST
SEE SECTION 1050

(1) $5'-9\frac{1}{2}$" FOR CONCRETE FOUNDATION ALTERNATE.

(2) $3'-6\frac{1}{2}$" FOR CONCRETE FOUNDATION ALTERNATE.

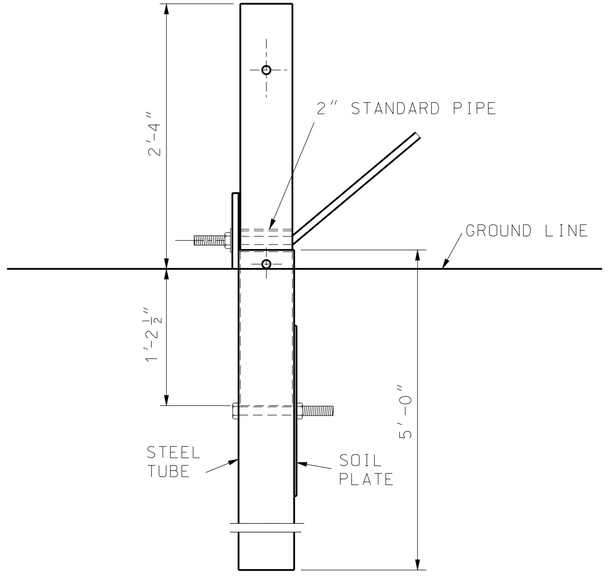


POST 1

## STEEL TUBE FOUNDATION FOR END ANCHORS

BOLTS AND NUTS SHALL BE GALVANIZED IN ACCORDANCE WITH THE REQUIREMENTS OF AASHTO M232, OR THEY MAY BE MECHANICALLY GALVANIZED IN ACCORDANCE WITH AASHTO M232 CLASS C.

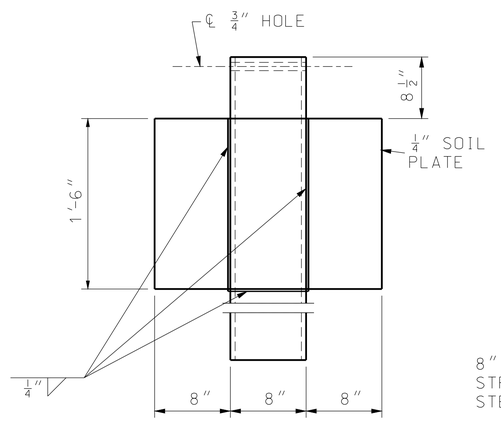


## SHOP WELDED SOIL PLATE CONNECTION

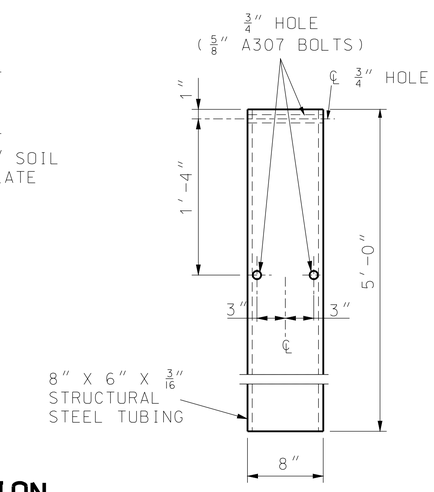


## STEEL TUBE

GENERAL NOTES:

THE CONTRACTOR HAS THE OPTION TO INSTALL WOOD POST 1 AND 2 IN STEEL TUBE OR CONCRETE FOUNDATION.

TRIMMING OF WOOD POST MAY BE NECESSARY FOR STEEL TUBE FOUNDATION.

STEEL TUBE FOUNDATIONS SHALL BE DRILLED AND BACK-FILLED WITH A SUITABLE MATERIAL WHEN THE SOIL PLATE IS BOLTED, AS SHOWN, TO THE STEEL TUBE. STEEL TUBE FOUNDATION MAY BE DRIVEN WHEN THE SOIL PLATE IS WELDED, AS SHOWN, TO THE STEEL TUBE.

28" GUARDRAIL
SPECIAL SHEET
13 OF 19

"THIS MEDIA SHOULD NOT BE CONSIDERED A CERTIFIED DOCUMENT."

| | |
|---|---|
| DATE PREPARED | 12/13/2012 |
| ROUTE | 35/70 |
| STATE | MO |
| DISTRICT | KC |
| SHEET NO. | 19 |
| COUNTY | JACKSON |
| JOB NO. | J4I2371 |
| CONTRACT ID. | |
| PROJECT NO. | |
| BRIDGE NO. | L07816, L07817 |

| DATE | DESCRIPTION |
|---|---|
| | |

IF A SEAL IS PRESENT ON THIS SHEET IT HAS BEEN ELECTRONICALLY SEALED AND DATED.

MISSOURI HIGHWAYS AND TRANSPORTATION COMMISSION
105 WEST CAPITOL
JEFFERSON CITY, MO 65102
1-888-ASK-MODOT (1-888-275-6636)

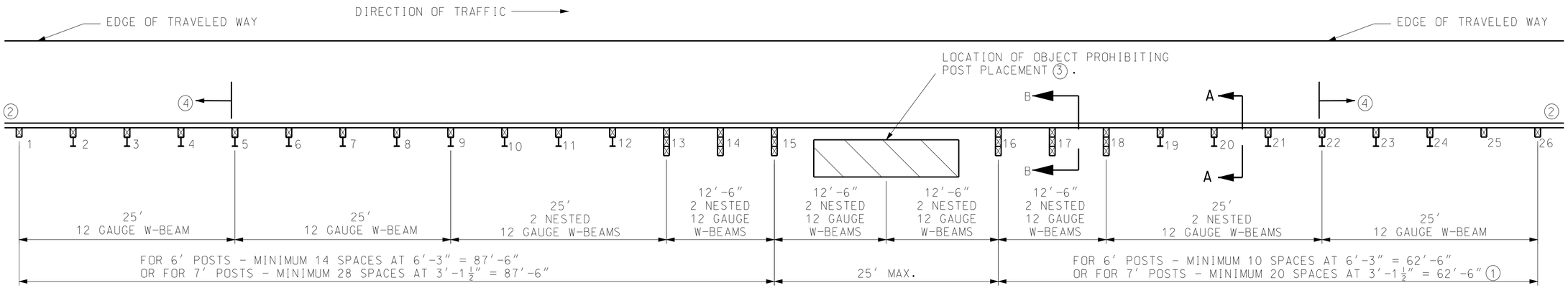


PLAN

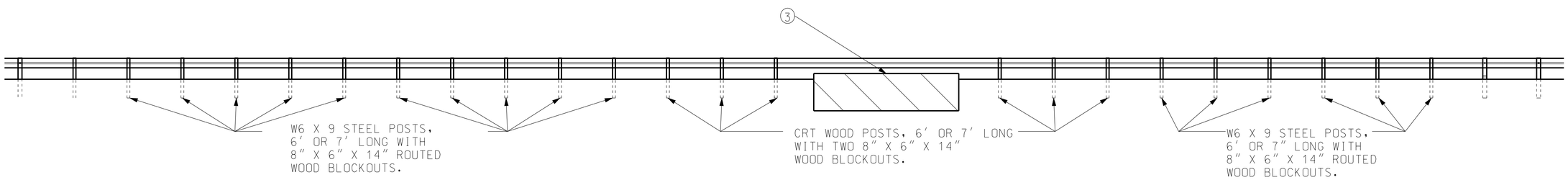


ELEVATION

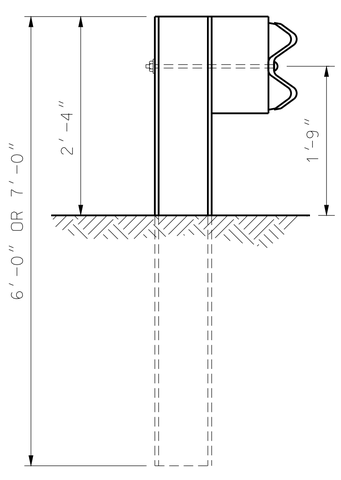


SECTION A-A

W6 X 9 STEEL POSTS, 6' OR 7' LONG WITH 8" X 6" X 14" ROUTED WOOD BLOCKOUTS POSTS 3 THROUGH 12 AND 19 THROUGH 24.

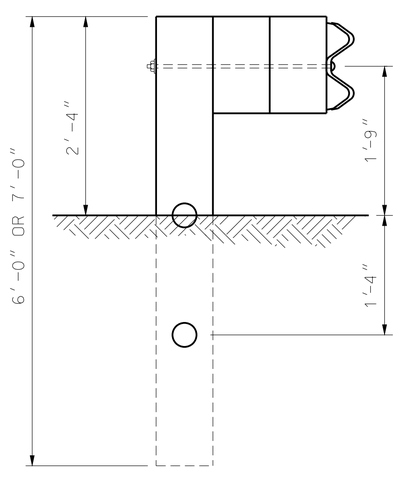


SECTION B-B

CRT WOOD POSTS, 6' OR 7' LONG WITH TWO8" X 6" X 14" WOOD BLOCKOUTS POSTS 13 THROUGH 18.

(1) IF LOCATED WITHIN THE CLEAR ZONE OF A TWO-WAY ROADWAY, THE MINIMUM LENGTH IS 87'-6".

(2) ADDITIONAL GUARDRAIL AS REQUIRED, INCLUDING END TREATMENT.

(3) THE POST MAY BE SKIPPED DUE TO THE PRESENCE OF AN OBSTACLE SUCH AS A CULVERT.

(4) PLACE END TREATMENT NO CLOSER TO THE SKIPPED POST THAN POSTS 5 AND 22.

28" GUARDRAIL
SKIPPING A POST
(MODIFIED LONG-SPAN
GUARDRAIL SYSTEM)
SPECIAL SHEET
14 OF 19

"THIS MEDIA SHOULD NOT BE CONSIDERED A CERTIFIED DOCUMENT."

| DATE PREPARED | |
|---|---|
| 12/13/2012 | |
| ROUTE 35/70 | STATE MO |
| DISTRICT KC | SHEET NO. 20 |
| COUNTY JACKSON | |
| JOB NO. J4I2371 | |
| CONTRACT ID. | |
| PROJECT NO. | |
| BRIDGE NO. L07816, L07817 | |

| DESCRIPTION | DATE |
|---|---|
| | |

MISSOURI HIGHWAYS AND TRANSPORTATION COMMISSION
105 WEST CAPITOL
JEFFERSON CITY, MO 65102
1-888-ASK-MODOT (1-888-275-6636)

IF A SEAL IS PRESENT ON THIS SHEET IT HAS BEEN ELECTRONICALLY SEALED AND DATED.

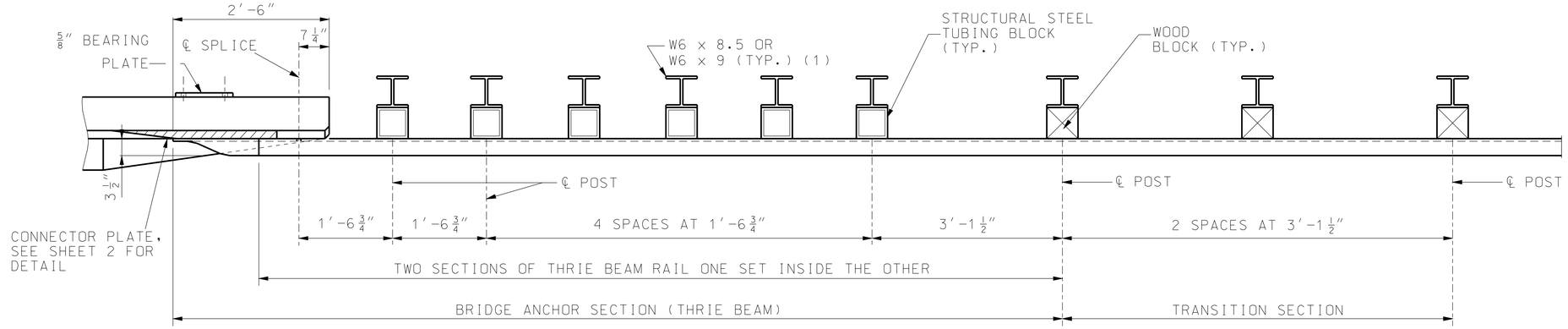


DIRECTION OF TRAFFIC

## PLAN

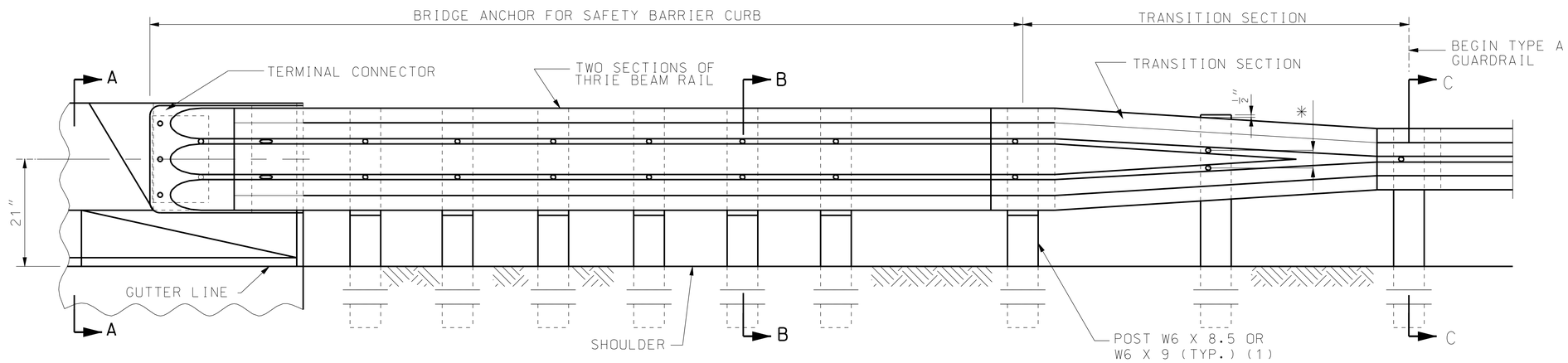


## PART SECTION THRU SLAB AT END OF WING

* VERIFY BY RAIL TRANSITION PRODUCER.

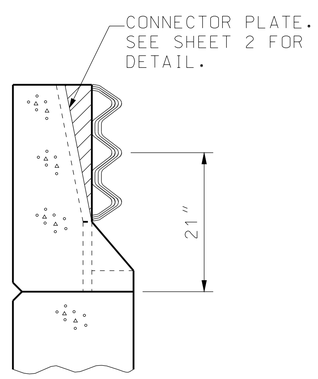


SECTION A-A

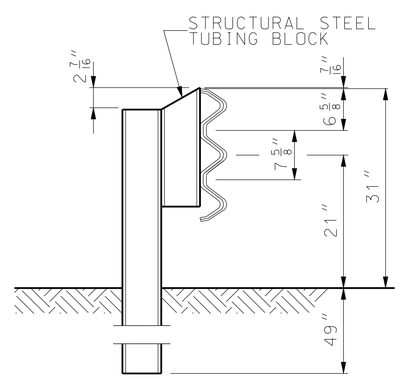


SECTION B-B

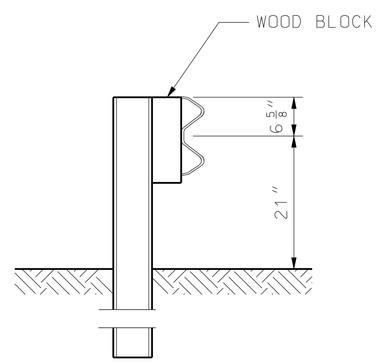


SECTION C-C

28" GUARDRAIL
BRIDGE ANCHOR SECTION
SAFETY BARRIER CURB
ON BRIDGE
SPECIAL SHEET
15 OF 19

"THIS MEDIA SHOULD NOT BE CONSIDERED A CERTIFIED DOCUMENT."

| | |
|---|---|
| DATE PREPARED | 12/13/2012 |
| ROUTE | 35/70 |
| STATE | MO |
| DISTRICT | KC |
| SHEET NO. | 21 |
| COUNTY | JACKSON |
| JOB NO. | J4I2371 |
| CONTRACT ID. | |
| PROJECT NO. | |
| BRIDGE NO. | L07816, L07817 |

| DATE | DESCRIPTION |
|---|---|
| | |

MISSOURI HIGHWAYS AND TRANSPORTATION COMMISSION
105 WEST CAPITOL
JEFFERSON CITY, MO 65102
1-888-ASK-MODOT (1-888-275-6636)

IF A SEAL IS PRESENT ON THIS SHEET IT HAS BEEN ELECTRONICALLY SEALED AND DATED.

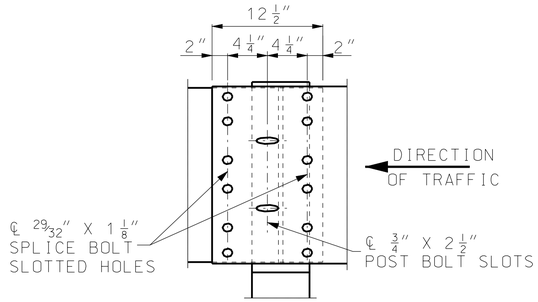


## THRIE BEAM RAIL SPLICE AT POST

(1) THE CONTRACTOR MAY, AT HIS OPTION, FURNISH EQUIVALENT SECTIONS FABRICATED FROM MATERIAL MEETING AND IN ACCORDANCE WITH THE REQUIREMENTS OF ASTM A769 GRADE 36 OR 40. THE SECTIONS SHALL BE GALVANIZED AFTER FABRICATION IN ACCORDANCE WITH REQUIREMENTS OF AASHTO M 111.

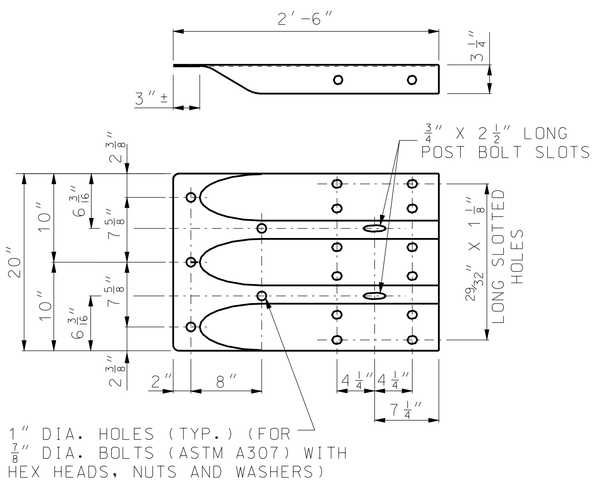


## TERMINAL CONNECTOR

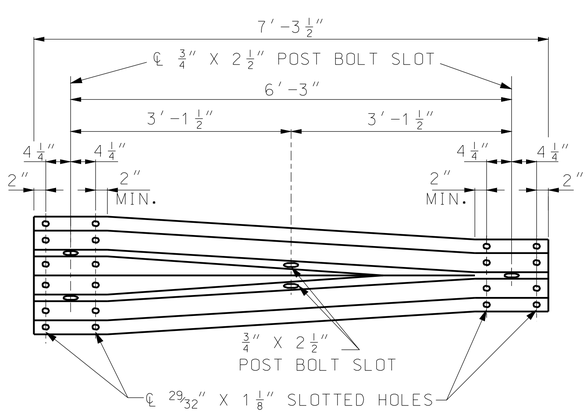


## TRANSITION SECTION

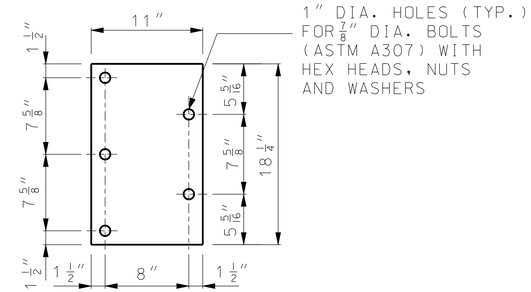


## 5/8" BEARING PLATE

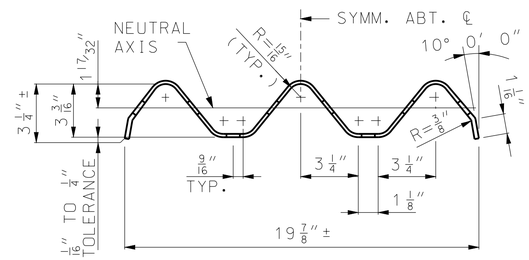


## SECTION THROUGH THRIE BEAM RAIL

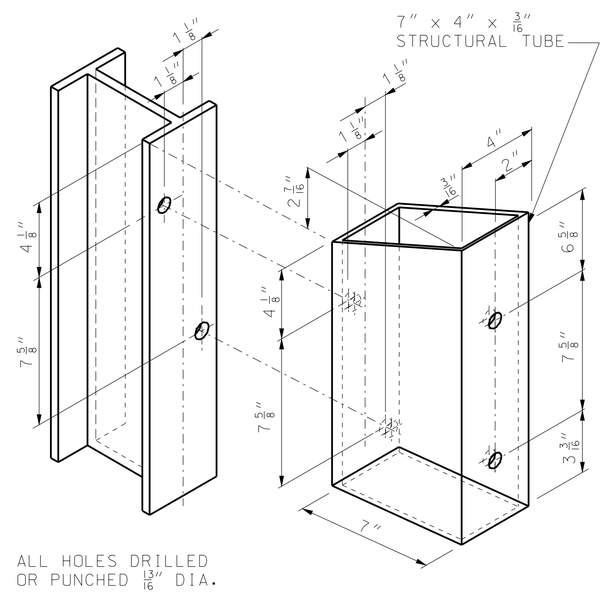


## STRUCTURAL STEEL TUBING BLOCK DETAIL

GENERAL NOTES:

DESIGN BASED ON NCHRP REPORT 350 TEST LEVEL 3.

THE THRIE BEAM RAIL, TERMINAL CONNECTOR AND THE TRANSITION SECTION FOR THE BRIDGE ANCHOR SECTION SHALL BE MADE OF STEEL AND SHLL BE 12 GAGE.

FOR PROTECTIVE COATING AND MATERIAL REQUIREMENTS, SEE SECTION 1040 OF THE STANDARD SPECIFICATIONS.

RAIL POSTS SHALL BE SET PERPENDICULAR TO THE ROADWAY PROFILE GRADE AND VERTICALLY IN CROSS SECTION.

WASHERS SHALL BE USED AT ALL POST BOLTS.

STRUCTURAL TUBING BLOCK SHALL BE FABRICATED FROM ASTM A500 BRADE B STEEL AND GALVANIZED.

USE 5/8" BUTTON-HEAD OVAL SHOULDER BOLTS WITH HEX NUTS AT ALL SLOTS (THICKNESS OF HEX NUTS = 39/64" MIN.).

THE BEARING PLATE SHALL BE FABRICATED FROM GRADE A36 STEEL AND GALVANIZED.

ALL LAP SPLICES, INCLUDING END SHOES, SHALL BE MADE IN THE DIRECTION OF TRAFFIC.

SEE STANDARD PLAN 606.00 FOR DETAILS NOT SHOWN.

THE COST OF FURNISHING, FABRICATING AND INSTALLING TRANSITION SECTION, COPLETE IN PLACE, WILL BE PAID FOR AT THE CONTRACT UNIT PRICE PER EACH.

THE COST OF FURNISHING FABRICATING AND INSTALLING BRIDGE ANCHOR SECTION (SAFETY BARRIER CURB), COMPLETE IN PLACE, WILL BE PAID FOR AT THE CONTRACT UNIT PRICE PER EACH.

LOCK SHALL BE OF THE SAME TYPE THROUGHOUT THE PROJECT LIMITS.

FOR DETAILS OF BLOCKS ON STEEL POSTS, SEE STANDARD PLAN 606.00.

28" GUARDRAIL
BRIDGE ANCHOR SECTION
SAFETY BARRIER CURB
ON BRIDGE
SPECIAL SHEET
16 OF 19

"THIS MEDIA SHOULD NOT BE CONSIDERED A CERTIFIED DOCUMENT."

| DATE PREPARED | |
|---|---|
| 12/13/2012 | |
| ROUTE 35/70 | STATE MO |
| DISTRICT KC | SHEET NO. 22 |
| COUNTY JACKSON | |
| JOB NO. J4I2371 | |
| CONTRACT ID. | |
| PROJECT NO. | |
| BRIDGE NO. L07816, L07817 | |

| DATE | DESCRIPTION |
|---|---|
| | |

MISSOURI HIGHWAYS AND TRANSPORTATION COMMISSION
105 WEST CAPITOL
JEFFERSON CITY, MO 65102
1-888-ASK-MODOT (1-888-275-6636)

IF A SEAL IS PRESENT ON THIS SHEET IT HAS BEEN ELECTRONICALLY SEALED AND DATED.

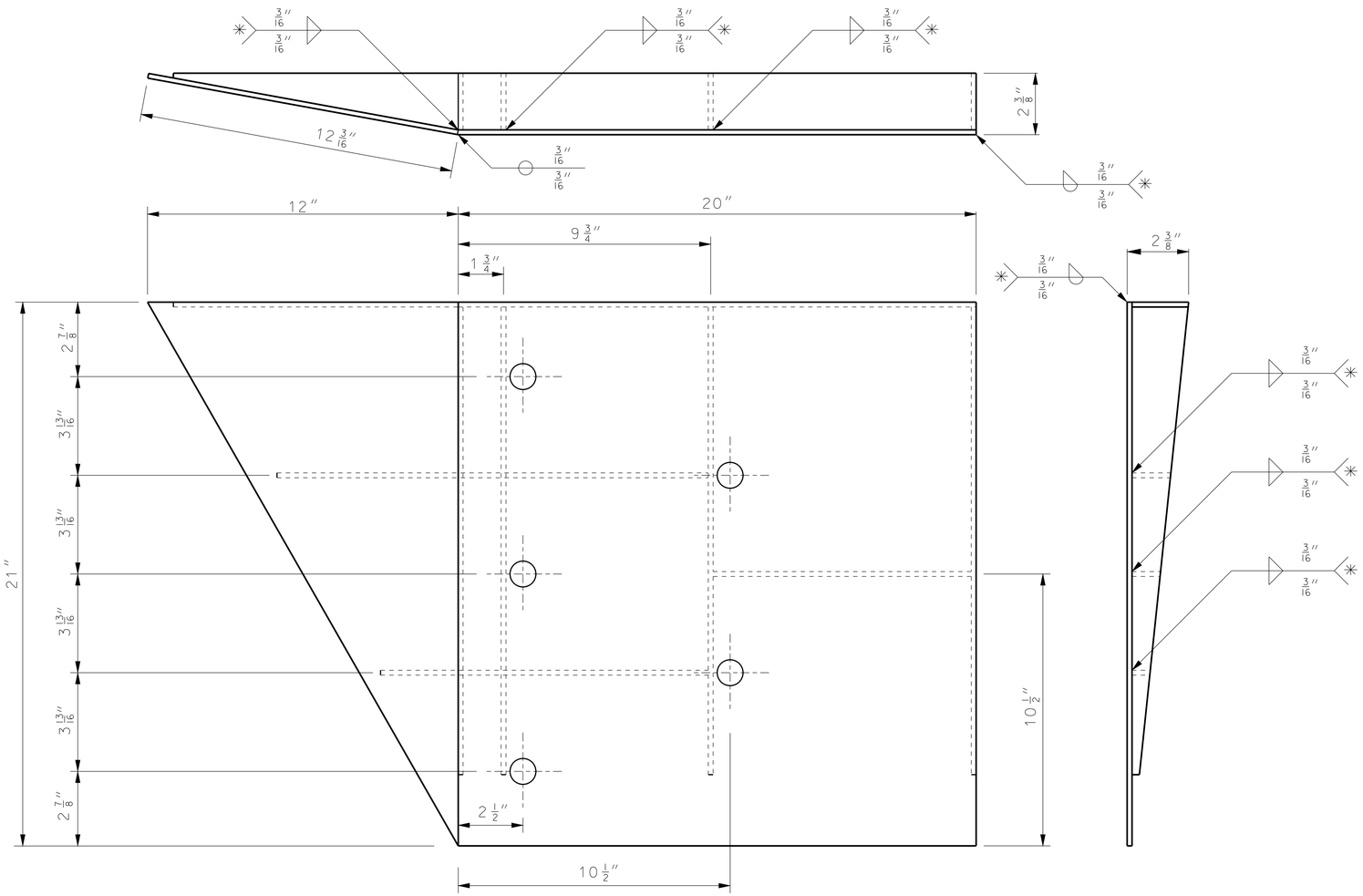


## WELDING INSTRUCTION

✳ ALL FILLET WELDS SHALL BE 1" LONG SPACED AT 2".

GENERAL NOTES:

COVER PLATE PANELS ARE 4.$\frac{3}{16}$" THICK.

ALL STIFFENERS ARE $\frac{1}{4}$" THICK.

CONNECTOR PLATE SHALL BE FABRICATED FROM ASTM GRADE A36 STEEL AND GALVANIZED.

FOR GALVANIZED REQUIREMENTS, SEE SECTION 1040 OF THE STANDARD SPECIFICATIONS.

ALL HOLE DIAMETERS SHALL BE 1".

28" GUARDRAIL
BRIDGE ANCHOR SECTION
SAFETY BARRIER CURB ON BRIDGE
(CONNECTOR PLATE DETAIL)
SPECIAL SHEET
17 OF 19

"THIS MEDIA SHOULD NOT BE CONSIDERED A CERTIFIED DOCUMENT."

| | |
|---|---|
| DATE PREPARED | 12/13/2012 |
| ROUTE | 35/70 |
| STATE | MO |
| DISTRICT | KC |
| SHEET NO. | 23 |
| COUNTY | JACKSON |
| JOB NO. | J4I2371 |
| CONTRACT ID. | |
| PROJECT NO. | |
| BRIDGE NO. | L0781G, L0781 7 |

| DATE | DESCRIPTION |
|---|---|
| | |

MISSOURI HIGHWAYS AND TRANSPORTATION COMMISSION

105 WEST CAPITOL
JEFFERSON CITY, MO 65102
1-888-ASK-MODOT (1-888-275-6636)

IF A SEAL IS PRESENT ON THIS SHEET IT HAS BEEN ELECTRONICALLY SEALED AND DATED.

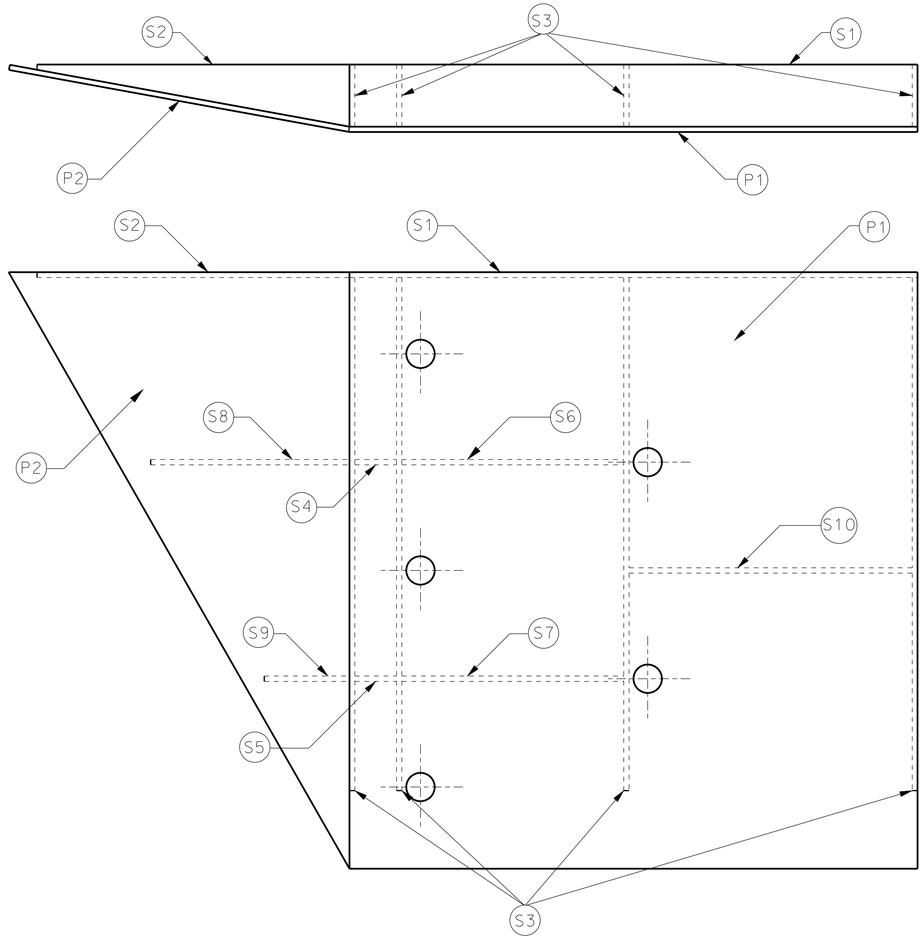


## PLATE AND STIFFENER IDENTIFICATION

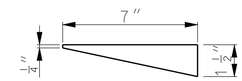


(S8) STIFFENER #8: 1 EACH

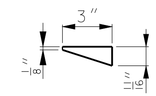


(S9) STIFFENER #9: 1 EACH

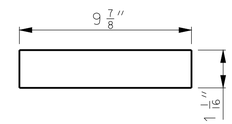


(S10) STIFFENER #10: 1 EACH

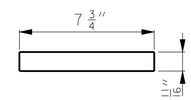


(S7) STIFFENER #7: 1 EACH

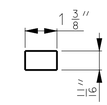


(S5) STIFFENER #5: 1 EACH

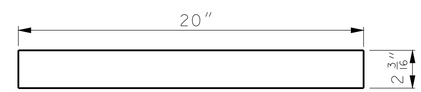


(S1) STIFFENER #1: 1 EACH

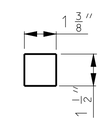


(S4) STIFFENER #4: 1 EACH

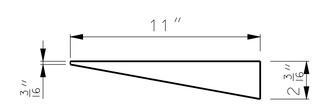


(S2) STIFFENER #2: 1 EACH

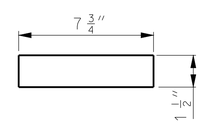


(S6) STIFFENER #6: 1 EACH

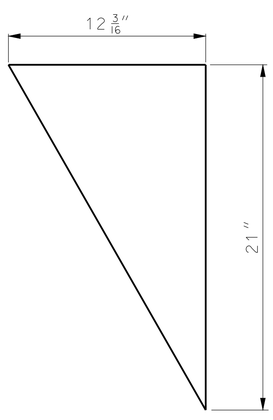


(P2) COVER PLATE #2

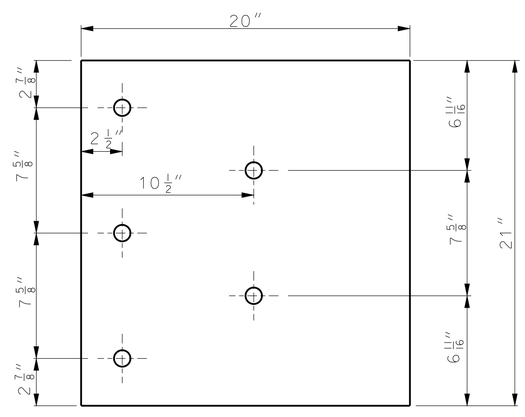


(P1) COVER PLATE #1

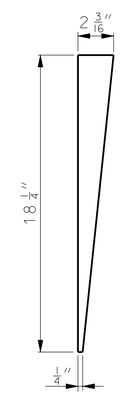


(S3) STIFFENER #3: 4 EACH

28" GUARDRAIL
BRIDGE ANCHOR SECTION
SAFETY BARRIER CURB ON BRIDGE
(CONNECTOR PLATE DETAIL)
SPECIAL SHEET
18 OF 19

"THIS MEDIA SHOULD NOT BE CONSIDERED A CERTIFIED DOCUMENT."

| | |
|---|---|
| DATE PREPARED | 12/13/2012 |
| ROUTE | 35/70 |
| STATE | MO |
| DISTRICT | KC |
| SHEET NO. | 24 |
| COUNTY | JACKSON |
| JOB NO. | J4I2371 |
| CONTRACT ID. | |
| PROJECT NO. | |
| BRIDGE NO. | L07816, L07817 |

| DATE | DESCRIPTION |
|---|---|
| | |

MISSOURI HIGHWAYS AND TRANSPORTATION COMMISSION

105 WEST CAPITOL
JEFFERSON CITY, MO 65102
1-888-ASK-MODOT (1-888-275-6636)

IF A SEAL IS PRESENT ON THIS SHEET IT HAS BEEN ELECTRONICALLY SEALED AND DATED.

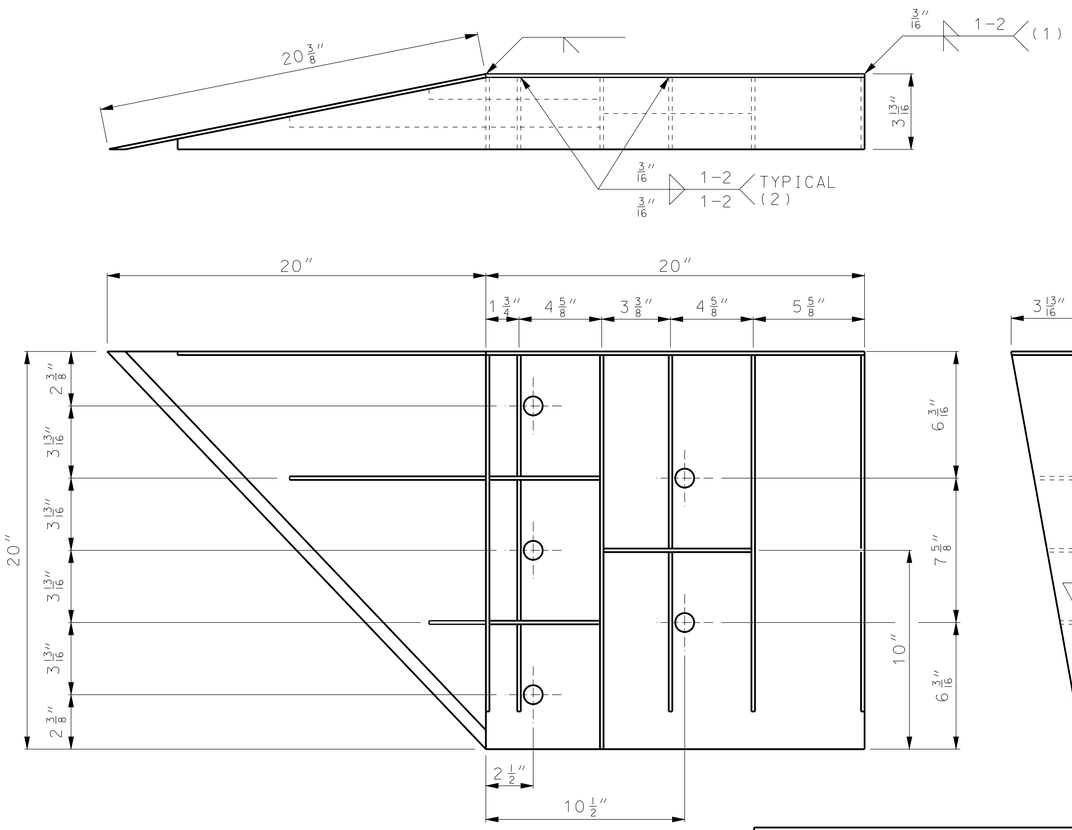


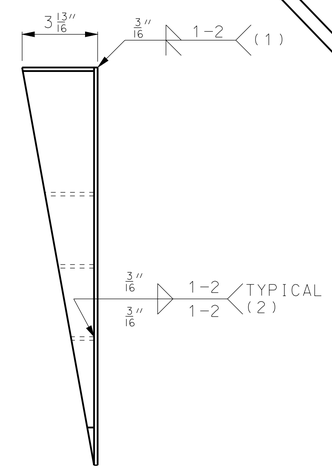


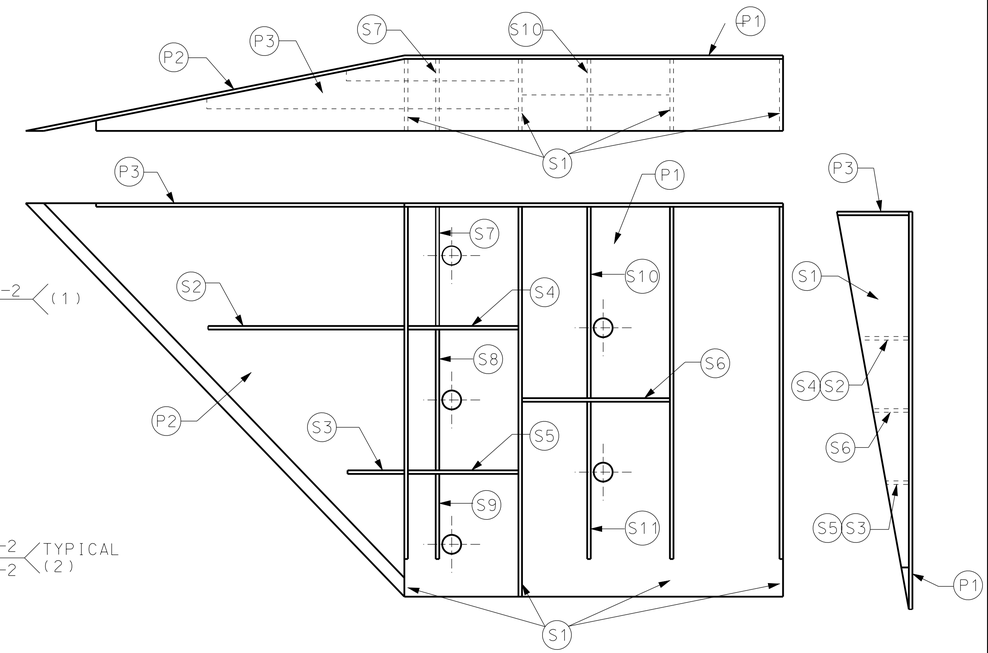


PLATE AND STIFFENER IDENTIFICATION

## WELDING INSTRUCTION

(1) STIFFENERS LOCATED AT THE OUTSIDE EDGES OF THE COVER PLATES SHALL BE WELDED AS FOLLOWS:
SINGLE BEVEL GROOVE WELD ON EXTERNAL SIDES AND $\frac{3}{16}$" FILLET WELD BY 1" LONG SPACED AT 2" ON INTERNAL SIDES.

(2) STEFFENERS LOCATED ON THE INSIDE OF THE COVER PLATE SHALL BE WELDED AS FOLLOWS:
$\frac{3}{16}$" FILLET WELD BY 1" LONG SPACED AT 2".

CONNECTOR PLATE DIMENSION (PER ASSEMBLY)

| PLATE | QUANTITY | SHAPE | SIZE (A x B x C x D) | THICKNESS |
|---|---|---|---|---|
| P1 | 1 | A B | 20" x 20" | $\frac{3}{16}$" |
| P2 | 1 | A B C | 20" x 20" x $28\frac{9}{16}$" | $\frac{3}{16}$" |
| P3 | 1 | A B C D | 39" x $3\frac{5}{8}$" x 20" x $19\frac{5}{16}$" | $\frac{3}{16}$" |
| S1 | 4 | A B C | $18\frac{7}{16}$" x $3\frac{5}{8}$" x $18\frac{3}{4}$" | $\frac{1}{4}$" |
| S2 | 1 | A B C D | $10\frac{1}{4}$" x $2\frac{7}{16}$" x $10\frac{3}{8}$" x $\frac{1}{2}$" | $\frac{1}{4}$" |
| S3 | 1 | A B C D | 3" x $1\frac{1}{16}$" x $3\frac{1}{8}$" x $\frac{1}{2}$" | $\frac{1}{4}$" |
| S4 | 1 | A B | $6\frac{1}{8}$" x $2\frac{7}{16}$" | $\frac{1}{4}$" |
| S5 | 1 | A B | $6\frac{1}{8}$" x $1\frac{1}{16}$" | $\frac{1}{4}$" |
| S6 | 1 | A B | $7\frac{3}{4}$" x $1\frac{3}{4}$" | $\frac{1}{4}$" |
| S7 | 1 | A B C D | $2\frac{9}{16}$" x 6" x $3\frac{5}{8}$" x $5\frac{7}{8}$" | $\frac{1}{4}$" |
| S8 | 1 | A B C D | $1\frac{5}{32}$" x $7\frac{1}{2}$" x $2\frac{1}{2}$" x $7\frac{3}{8}$" | $\frac{1}{4}$" |
| S9 | 1 | A B C | $6\frac{1}{16}$" x $6\frac{3}{16}$" x $1\frac{3}{32}$" | $\frac{1}{4}$" |
| S10 | 1 | A B C D | $1\frac{7}{8}$" x $9\frac{7}{8}$" x $3\frac{5}{8}$" x $9\frac{11}{16}$" | $\frac{1}{4}$" |
| S11 | 1 | A B C | $8\frac{1}{2}$" x $8\frac{3}{4}$" x $1\frac{13}{16}$" | $\frac{1}{4}$" |

GENERAL NOTES:

COVER PLATE PANELS ARE $\frac{3}{16}$" THICK.

ALL STIFFENERS ARE $\frac{1}{4}$" THICK.

CONNECTOR PLATE SHALL BE FABRICATED FROM ASTM GRADE A36 STEEL AND GALVANIZED.

FOR GALVANIZED REQUIREMENTS, SEE SECTION 1040 OF THE STANDARD SPECIFICATIONS.

ALL HOLE DIAMETERS SHALL BE 1".

28" GUARDRAIL
BRIDGE ANCHOR SECTION
SAFETY BARRIER CURB ON BRIDGE
(CONNECTOR PLATE DETAIL)
SINGLE SLOPE BARRIERS
SPECIAL SHEET
19 OF 19

"THIS MEDIA SHOULD NOT BE CONSIDERED A CERTIFIED DOCUMENT."

| | |
|---|---|
| DATE PREPARED | 12/13/2012 |
| ROUTE | 35/70 |
| STATE | MO |
| DISTRICT | KC |
| SHEET NO. | 25 |
| COUNTY | JACKSON |
| JOB NO. | J4I2371 |
| CONTRACT ID. | |
| PROJECT NO. | |
| BRIDGE NO. | L07816, L07817 |

DESCRIPTION

DATE

MISSOURI HIGHWAYS AND TRANSPORTATION COMMISSION

105 WEST CAPITOL
JEFFERSON CITY, MO 65102
1-888-ASK-MODOT (1-888-275-6636)

IF A SEAL IS PRESENT ON THIS SHEET IT HAS BEEN ELECTRONICALLY SEALED AND DATED.

# TEMPORARY TRAFFIC CONTROL DEVICE SPACING

| SIGN SPACING FOR ADVANCE SIGN SERIES (1) (2) | | |
|---|---|---|
| SPEED (P) MPH | NON-DIVIDED HIGHWAYS (S) | DIVIDED HIGHWAYS (S) |
| 0-35 | 200 FT (3) | 200 FT (3) |
| 40-45 | 350 FT | 500 FT |
| 50-55 | 500 FT | 1000 FT |
| 60-70 | SA-1000 FT, SB-1500 FT, SC-2640 FT | |

| TAPER LENGTHS AND SPACING OF CHANNELIZING DEVICES | | | | | | |
|---|---|---|---|---|---|---|
| SPEED (P) MPH | MINIMUM TAPER LENGTHS (L) FOR LANE WIDTHS (W) | | | MINIMUM TAPER SHOULDER (T1) (4) | MAXIMUM CHANNELIZER SPACING (5) | |
| | 10 FT | 11 FT | 12 FT | | THROUGH TAPER | THROUGH WORK AREA |
| 0-35 | 205 FT | 225 FT | 245 FT | 70 | 35 FT (6) | 50 FT (6) |
| 40-45 | 450 FT | 495 FT | 540 FT | 150 | 40 FT (6) | 100 FT (6) |
| 50-55 | 550 FT | 605 FT | 660 FT | 185 | 50 FT (7) | 100 FT (7) |
| 60-70 | 700 FT | 770 FT | 840 FT | 235 | 60 FT (7) | 100 FT (7) |

NOTES:

DIMENSIONS IN FEET UNLESS OTHERWISE NOTED.

(1) SPACING BETWEEN SIGNS AND SPACING BETWEEN LAST SIGN AND FLAGGER, BEGINNING OF TAPER, OR SIGNED CONDITION.
(2) SPACINGS MAY BE ADJUSTED AS NECESSARY TO MEET FIELD CONDITIONS.
(3) FOR URBAN LOW SPEED MINIMUM SPACING IS 100 FT.
(4) BASED ON 10 FT SHOULDER WIDTH.
(5) CHANNELIZER SPACING MAY BE REDUCED TO DISCOURAGE TRAFFIC ENCROACHMENT.
(6) SPACING REDUCED TO 1/2 AT INTERSECTIONS.
(7) SPACING MAY BE REDUCED TO 1/2 AT INTERSECTIONS.

| LONGITUDINAL BUFFER SPACE | |
|---|---|
| SPEED (P) MPH | BUFFER SPACE (FEET) |
| 0-35 | 250 |
| 40-45 | 360 |
| 50-55 | 495 |
| 60-70 | 730 |

TAPER LENGTH (L)

$L = W \times P$ FOR 40 MPH OR MORE

$L = \frac{WP^2}{60}$ FOR 35 MPH OR LESS

L = TAPER LENGTH IN FEET
W = LATERAL SHIFT IN FEET
P = POSTED SPEED PRIOR TO ROAD WORK IN MPH

GENERAL NOTES:

- SEE STANDARD PLAN 616.10 FOR DETAILS AND ITEMS NOT SHOWN
- EXISTING SIGNS SHALL BE COVERED DURING WORKING HOURS ONLY IF IN CONFLICT WITH TRAFFIC CONTROL PLANS.
- NO DIRECT PAYMENT WILL BE MADE FOR RELOCATING, COVERING, UNCOVERING OR REMOVING SIGNS.
- CONES ALLOWABLE FOR DAYTIME OPERATIONS ONLY.
- LOCATE FLASHING ARROW PANEL AT BEGINNING OF TAPER WHEN FEASIBLE, ARROW PANELS ARE ALWAYS LOCATED BEHIND CHANNELIZERS OR CONES.

DEVICE SPACING
TYPICAL APPLICATIONS
TRAFFIC CONTROL
SHEET 1 OF 48

"THIS MEDIA SHOULD NOT BE CONSIDERED A CERTIFIED DOCUMENT."

DATE PREPARED 12/13/2012
ROUTE 35/70 | STATE MO
DISTRICT KC | SHEET NO. 26
COUNTY JACKSON
JOB NO. J4I2371
CONTRACT ID.
PROJECT NO.
BRIDGE NO.

DESCRIPTION | DATE

MISSOURI HIGHWAYS AND TRANSPORTATION COMMISSION
105 WEST CAPITOL
JEFFERSON CITY, MO 65102
1-888-ASK-MODOT (1-888-275-6636)

IF A SEAL IS PRESENT ON THIS SHEET IT HAS BEEN ELECTRONICALLY SEALED AND DATED.

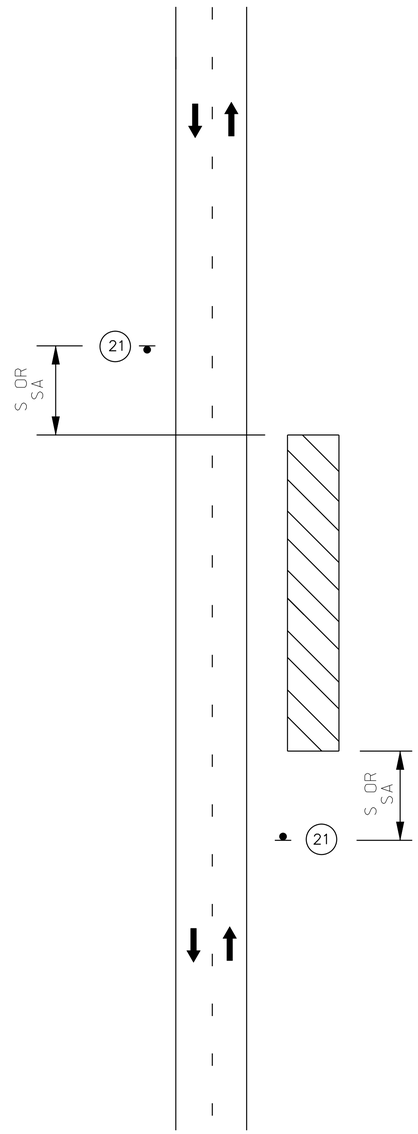


WORK BEYOND SHOULDER (1)

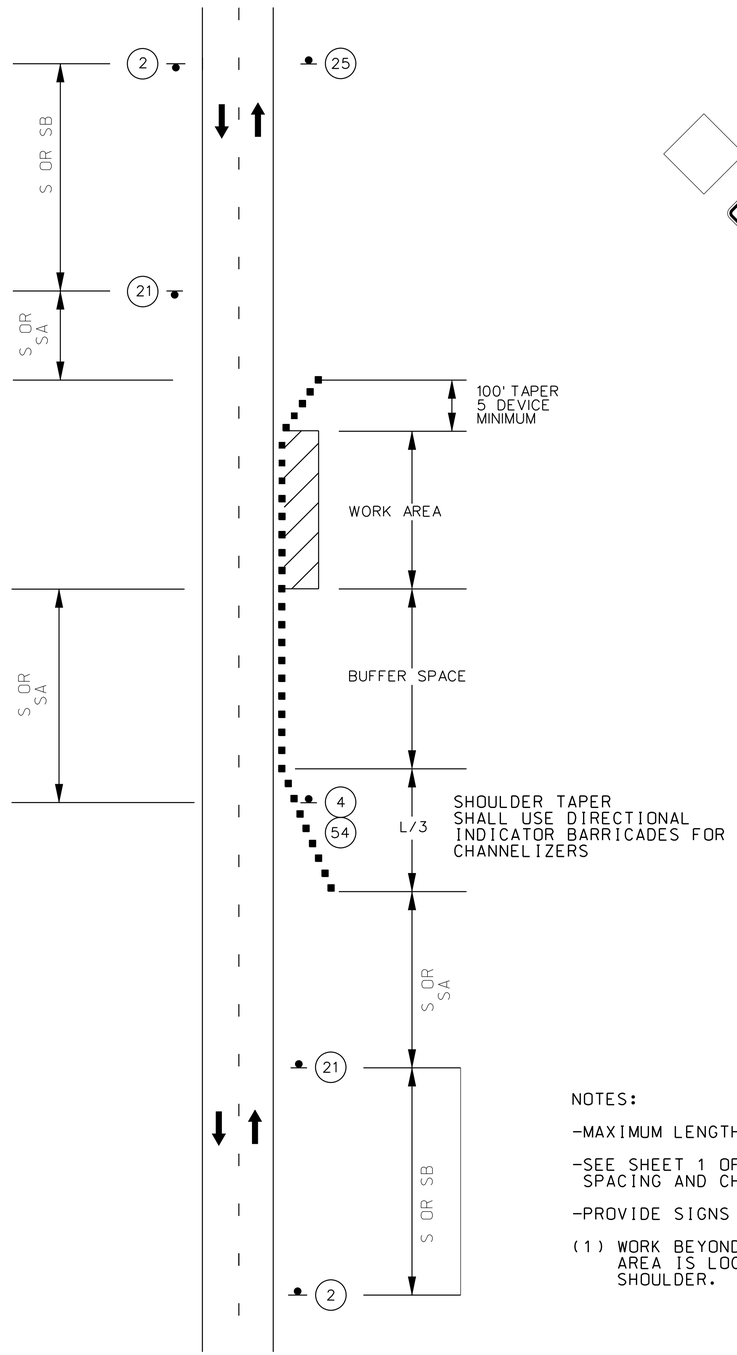


SHOULDER WORK WITH NO
TRAVELWAY ENCROACHMENT

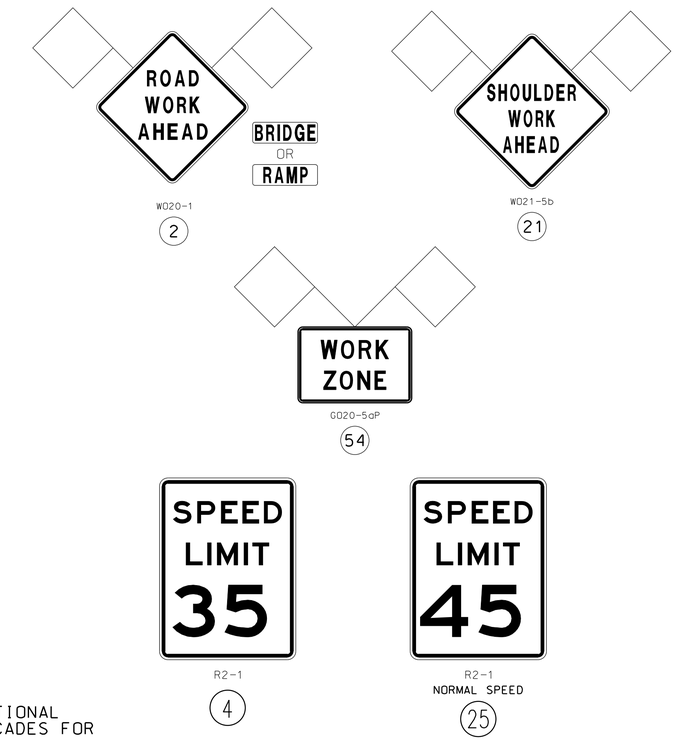


NOTES:

-MAXIMUM LENGTH OF WORK ZONE NOT TO EXCEED 1 MILE.

-SEE SHEET 1 OF TRAFFIC CONTROL FOR SIGN SPACING, DEVICE SPACING AND CHANNELIZING TAPER LENGTHS.

-PROVIDE SIGNS ON LEFT AND RIGHT OF DIVIDED HIGHWAYS.

(1) WORK BEYOND SHOULDER SIGNING ONLY REQUIRED WHEN WORK AREA IS LOCATED BETWEEN SHOULDER AND 30 FEET BEYOND SHOULDER.

SHOULDER WORK
TYPICAL APPLICATIONS
TRAFFIC CONTROL
SHEET 2 OF 48

"THIS MEDIA SHOULD NOT BE CONSIDERED A CERTIFIED DOCUMENT."

| | |
|---|---|
| DATE PREPARED | 12/13/2012 |
| ROUTE | 35/70 |
| STATE | MO |
| DISTRICT | KC |
| SHEET NO. | 27 |
| COUNTY | JACKSON |
| JOB NO. | J412371 |
| CONTRACT ID. | |
| PROJECT NO. | |
| BRIDGE NO. | |

| DATE | DESCRIPTION |
|---|---|
| | |

MISSOURI HIGHWAYS AND TRANSPORTATION COMMISSION

105 WEST CAPITOL
JEFFERSON CITY, MO 65102
1-888-ASK-MODOT (1-888-275-6636)

IF A SEAL IS PRESENT ON THIS SHEET IT HAS BEEN ELECTRONICALLY SEALED AND DATED.

REV.

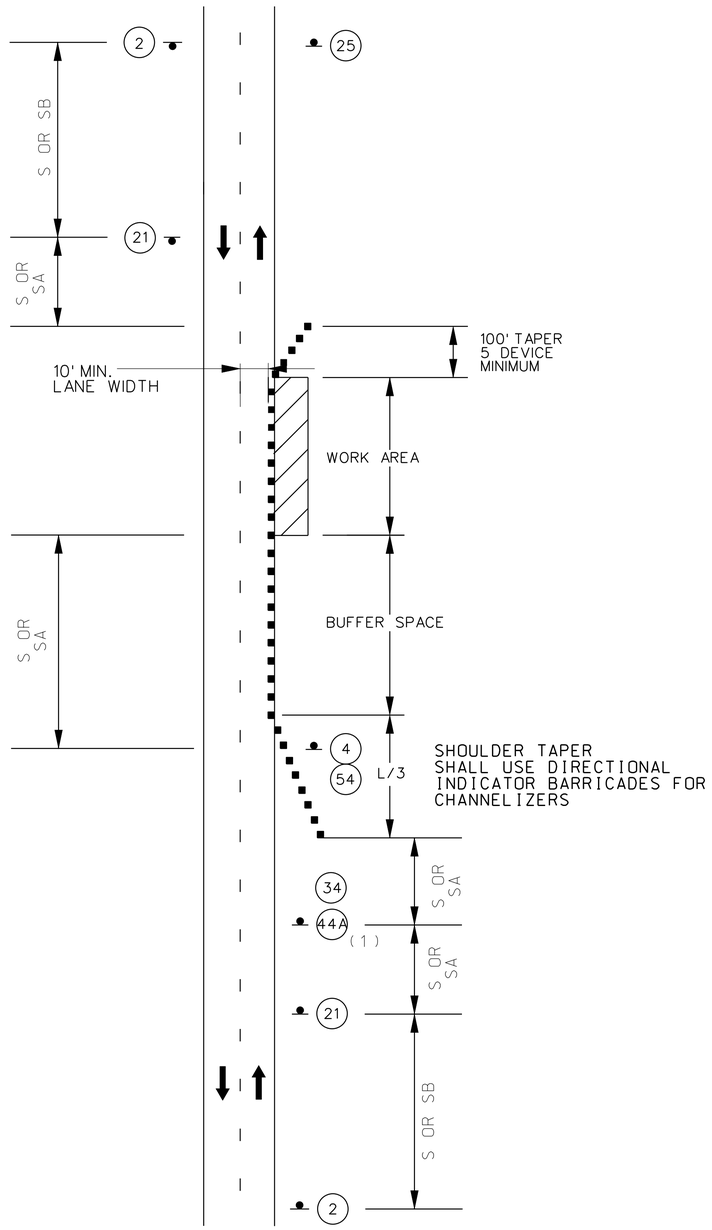


SHOULDER WORK
MINOR TRAVELWAY ENCROACHMENT

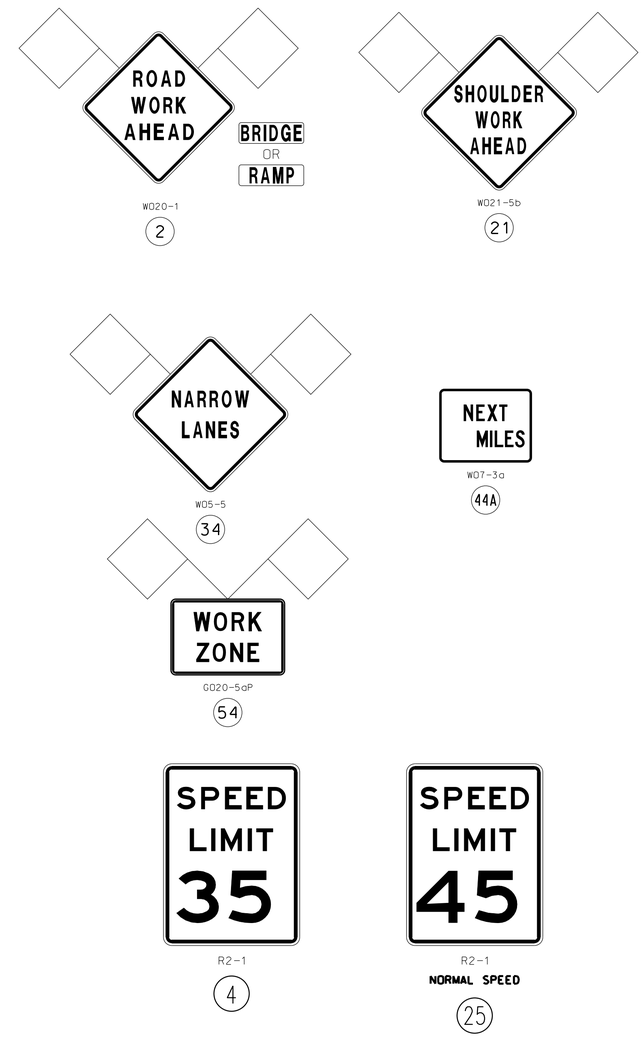


NOTES:

-MAXIMUM LENGTH OF WORK ZONE NOT TO EXCEED 1 MILE.

-SEE SHEET 1 OF TRAFFIC CONTROL FOR SIGN SPACING, DEVICE SPACING AND CHANNELIZING TAPER LENGTHS.

-PROVIDE SIGNS ON LEFT AND RIGHT OF DIVIDED HIGHWAYS.

(1). SIGN 44A NOT REQUIRED FOR NARROW LANE SECTIONS LESS THAN ONE MILE.

SHOULDER WORK
TYPICAL APPLICATIONS
TRAFFIC CONTROL
SHEET 3 OF 48

"THIS MEDIA SHOULD NOT BE CONSIDERED A CERTIFIED DOCUMENT."

| | |
|---|---|
| DATE PREPARED | 12/13/2012 |
| ROUTE | 35/70 |
| STATE | MO |
| DISTRICT | KC |
| SHEET NO. | 28 |
| COUNTY | JACKSON |
| JOB NO. | J4I2371 |
| CONTRACT ID. | |
| PROJECT NO. | |
| BRIDGE NO. | |

| DATE | DESCRIPTION |
|---|---|
| | |

MISSOURI HIGHWAYS AND TRANSPORTATION COMMISSION

105 WEST CAPITOL
JEFFERSON CITY, MO 65102
1-888-ASK-MODOT (1-888-275-6636)

IF A SEAL IS PRESENT ON THIS SHEET IT HAS BEEN ELECTRONICALLY SEALED AND DATED.

REV.

EFFECTIVE: 02-01-2009

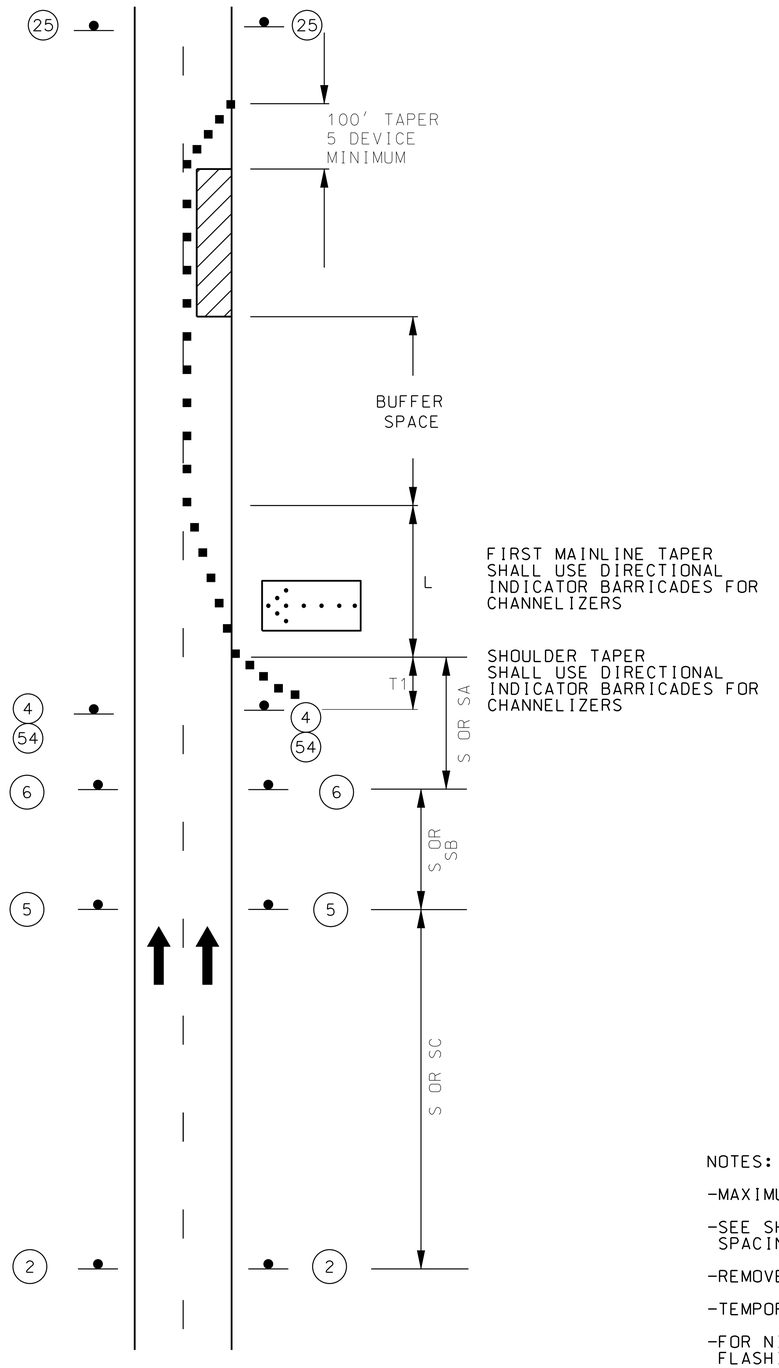


TWO-LANE DIVIDED HIGHWAY

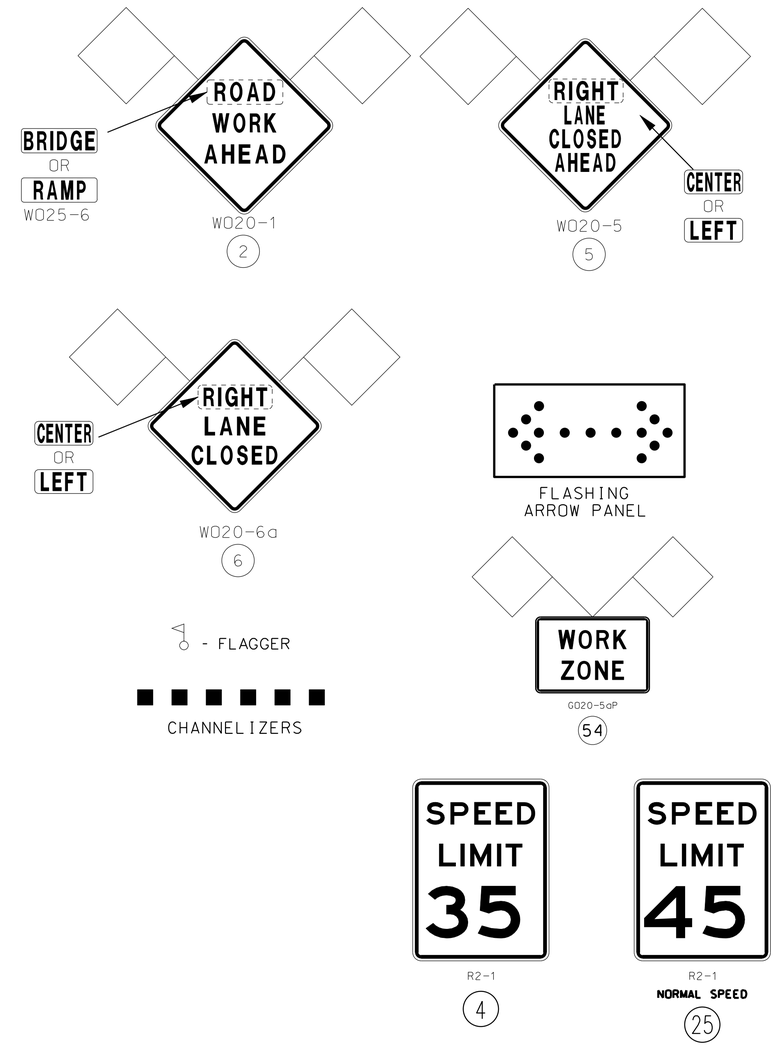


NOTES:

-MAXIMUM LENGTH OF WORK ZONE NOT TO EXCEED 1 MILE.

-SEE SHEET 1 OF TRAFFIC CONTROL FOR SIGN SPACING, DEVICE SPACING AND CHANNELIZING TAPER LENGTHS.

-REMOVE AND/OR MODIFY ANY EXISTING PAVEMENT MARKING AS NEEDED.

-TEMPORARY PAVEMENT MARKING REQUIRED WITH LONG TERM CLOSURES.

-FOR NIGHT WORK ONLY FIRST MAINLINE TAPER SHALL USE SEQUENTIAL FLASHING WARNING LIGHTS

LANE CLOSURE
TYPICAL APPLICATIONS
TRAFFIC CONTROL
SHEET 4 OF 48

"THIS MEDIA SHOULD NOT BE CONSIDERED A CERTIFIED DOCUMENT."

| | |
|---|---|
| DATE PREPARED | 12/13/2012 |
| ROUTE | 35/70 |
| STATE | MO |
| DISTRICT | KC |
| SHEET NO. | 29 |
| COUNTY | JACKSON |
| JOB NO. | J4I2371 |
| CONTRACT ID. | |
| PROJECT NO. | |
| BRIDGE NO. | |

| DATE | DESCRIPTION |
|---|---|
| | |

MISSOURI HIGHWAYS AND TRANSPORTATION COMMISSION

105 WEST CAPITOL
JEFFERSON CITY, MO 65102
1-888-ASK-MODOT (1-888-275-6636)

IF A SEAL IS PRESENT ON THIS SHEET IT HAS BEEN ELECTRONICALLY SEALED AND DATED.

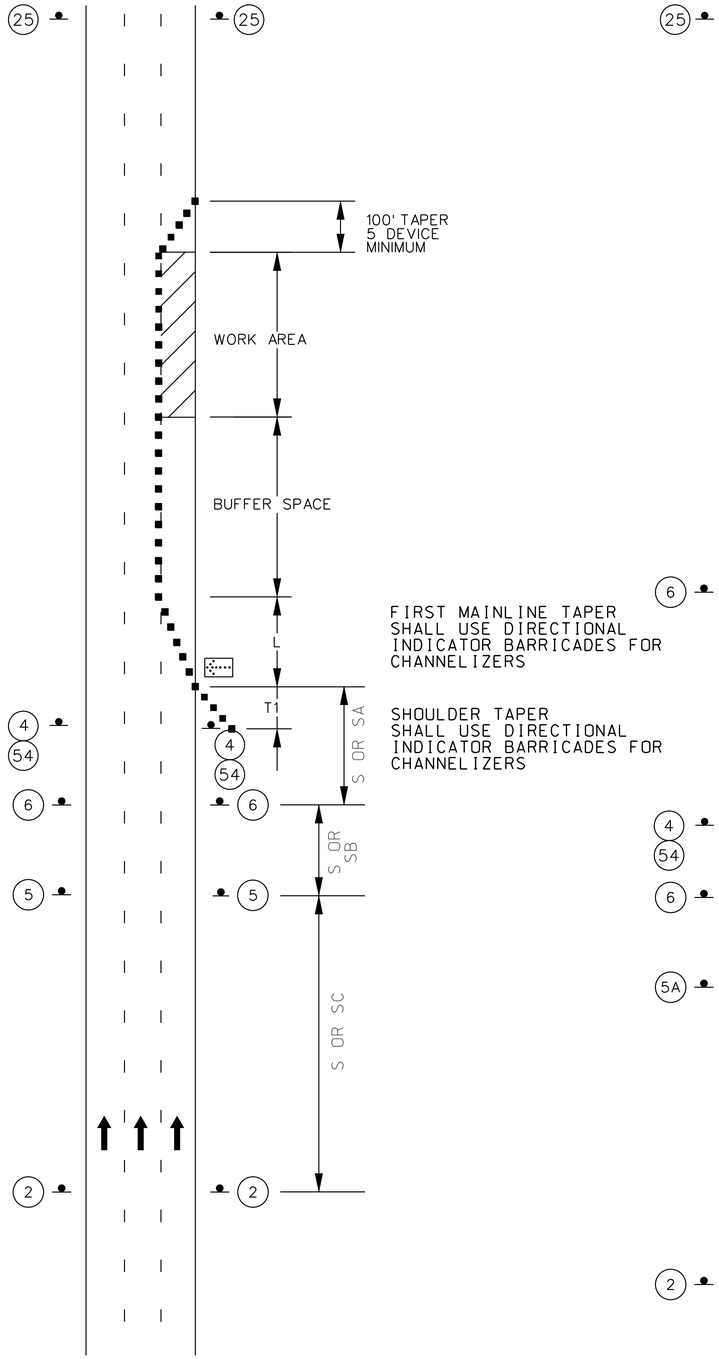


TYPICAL LEFT OR RIGHT LANE CLOSURE
MULTI-LANE DIVIDED HIGHWAY

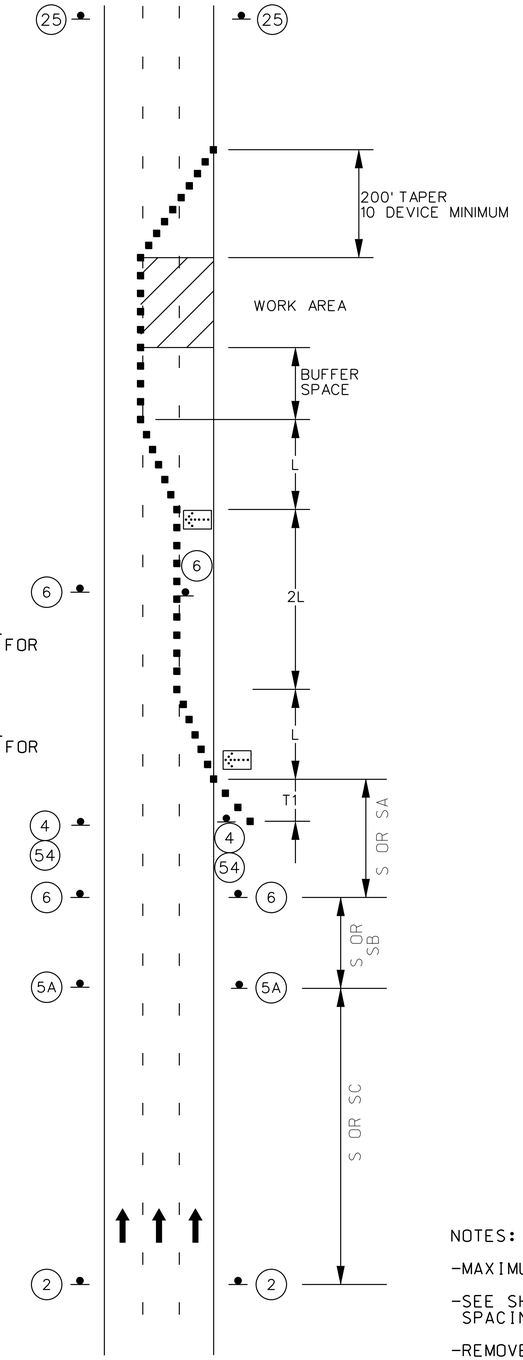


LANE CLOSURE TWO LANES OF
MULTI-LANE DIVIDE HIGHWAY

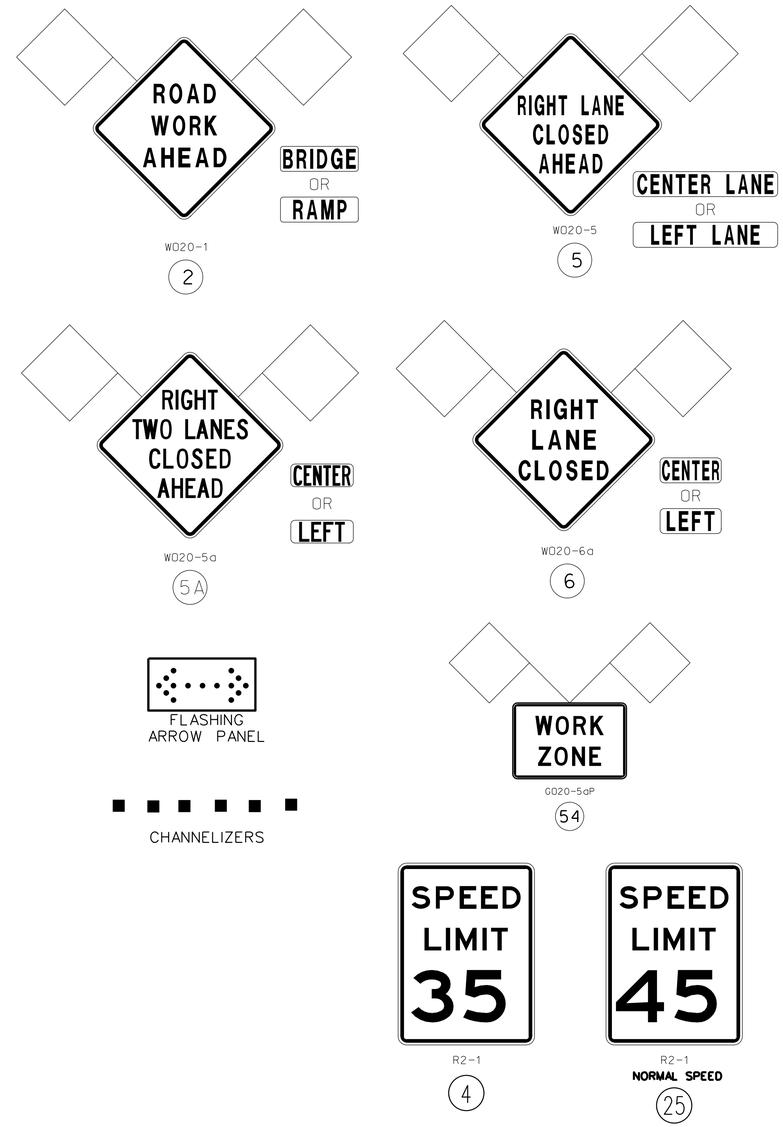


NOTES:

-MAXIMUM LENGTH OF WORK ZONE NOT TO EXCEED 1 MILE.

-SEE SHEET 1 OF TRAFFIC CONTROL FOR SIGN SPACING, DEVICE SPACING AND CHANNELIZING TAPER LENGTHS.

-REMOVE AND/OR MODIFY ANY EXISTING PAVEMENT MARKING AS NEEDED.

-TEMPORARY PAVEMENT MARKING REQUIRED WITH LONG TERM CLOSURES.

-FOR NIGHT WORK ONLY FIRST MAINLINE TAPER SHALL USE SEQUENTIAL FLASHING WARNING LIGHTS.

LANE CLOSURE
MULTI LANE
TYPICAL APPLICATIONS
TRAFFIC CONTROL
SHEET 5 OF 48

"THIS MEDIA SHOULD NOT BE CONSIDERED A CERTIFIED DOCUMENT."

| | |
|---|---|
| DATE PREPARED | 12/13/2012 |
| ROUTE | 35/70 |
| STATE | MO |
| DISTRICT | KC |
| SHEET NO. | 30 |
| COUNTY | JACKSON |
| JOB NO. | J412371 |
| CONTRACT ID. | |
| PROJECT NO. | |
| BRIDGE NO. | |

DESCRIPTION

DATE

MISSOURI HIGHWAYS AND TRANSPORTATION COMMISSION

105 WEST CAPITOL
JEFFERSON CITY, MO 65102
1-888-ASK-MODOT (1-888-275-6636)

IF A SEAL IS PRESENT ON THIS SHEET IT HAS BEEN ELECTRONICALLY SEALED AND DATED.

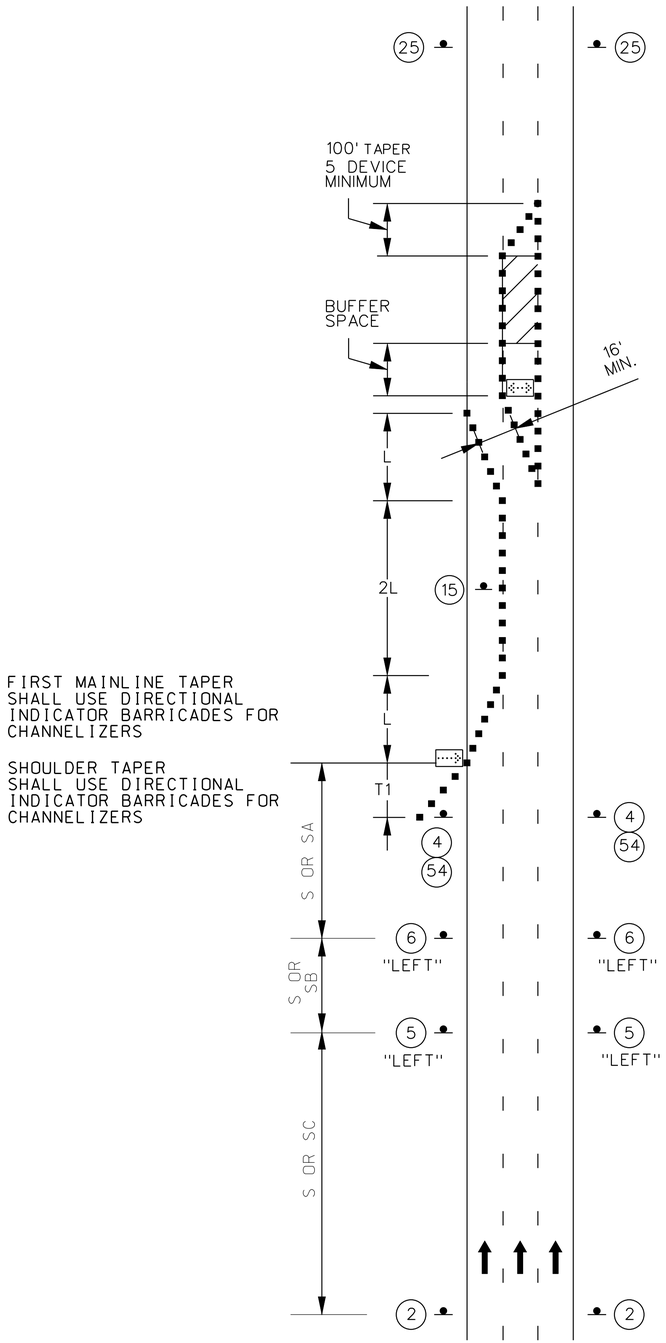


INTERIOR LANE

LANE CLOSURE
INTERIOR LANE CLOSURE OF MULTI-LANE DIVIDED HIGHWAY

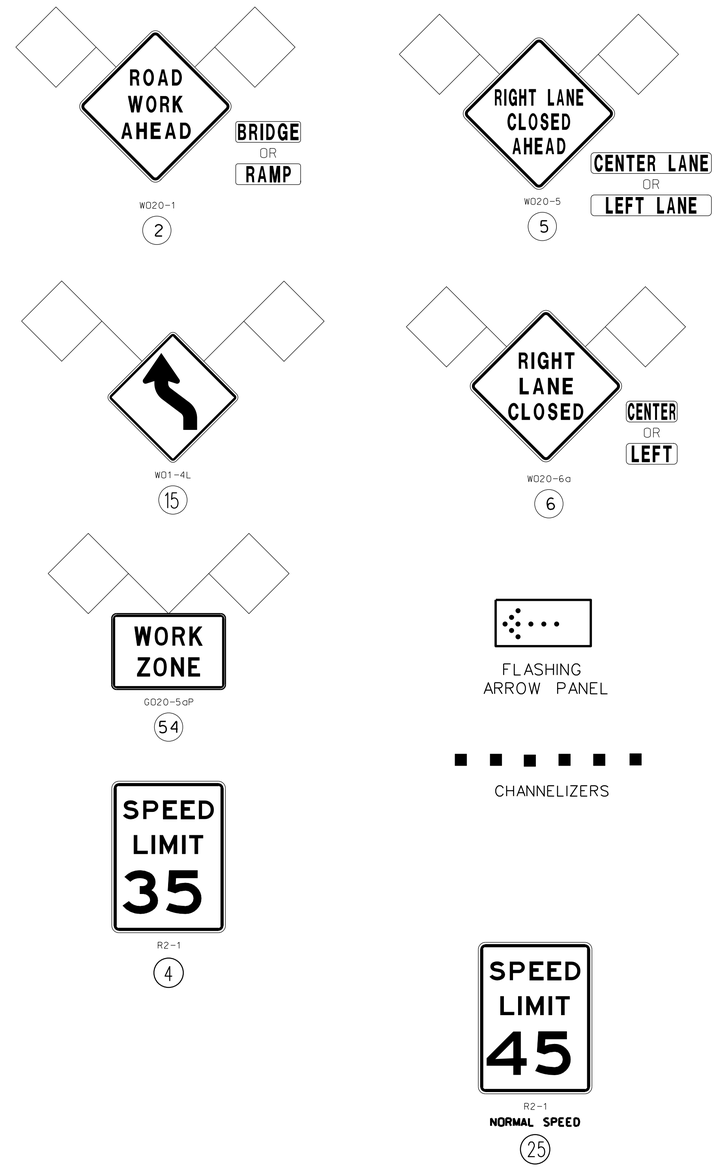


NOTES:

-MAXIMUM LENGTH OF WORK ZONE NOT TO EXCEED 1 MILE.

-SEE SHEET 1 OF TRAFFIC CONTROL FOR SIGN SPACING, DEVICE SPACING AND CHANNELIZING TAPER LENGTHS.

-REMOVE AND/OR MODIFY ANY EXISTING PAVEMENT MARKING AS NEEDED.

-TEMPORARY PAVEMENT MARKING REQUIRED WITH LONG TERM CLOSURES.

-FOR NIGHT WORK ONLY FIRST MAINLINE TAPER SHALL USE SEQUENTIAL FLASHING WARNING LIGHTS.

LANE CLOSURE
INTERIOR LANE
TYPICAL APPLICATIONS
TRAFFIC CONTROL
SHEET 6 OF 48

"THIS MEDIA SHOULD NOT BE CONSIDERED A CERTIFIED DOCUMENT."

| | |
|---|---|
| DATE PREPARED | 12/13/2012 |
| ROUTE | 35/70 |
| STATE | MO |
| DISTRICT | KC |
| SHEET NO. | 31 |
| COUNTY | JACKSON |
| JOB NO. | J4I2371 |
| CONTRACT ID. | |
| PROJECT NO. | |
| BRIDGE NO. | |

| DATE | DESCRIPTION |
|---|---|
| | |

MISSOURI HIGHWAYS AND TRANSPORTATION COMMISSION
105 WEST CAPITOL
JEFFERSON CITY, MO 65102
1-888-ASK-MODOT (1-888-275-6636)

IF A SEAL IS PRESENT ON THIS SHEET IT HAS BEEN ELECTRONICALLY SEALED AND DATED.

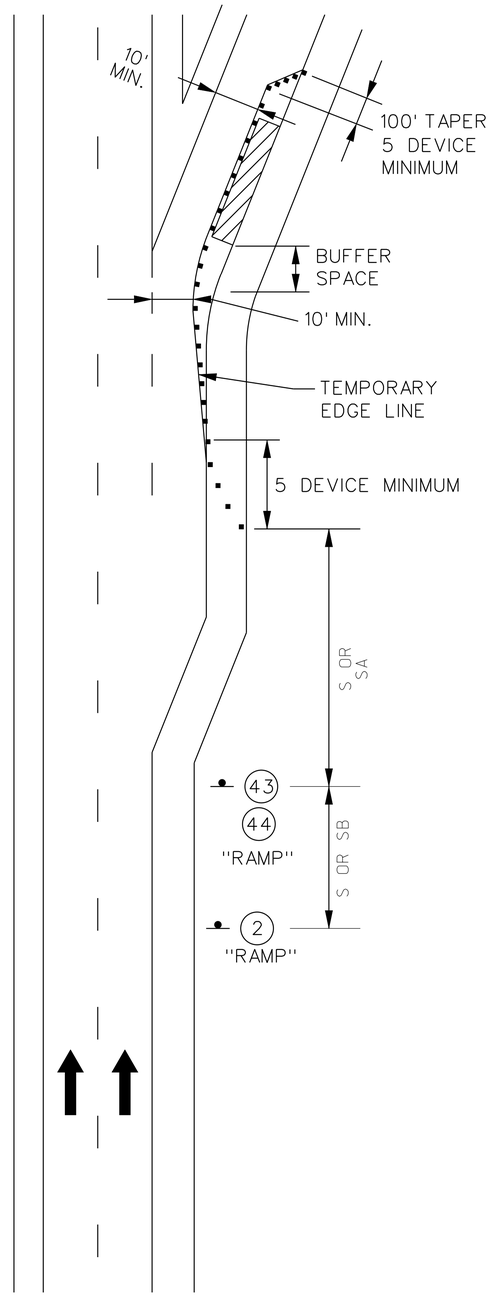


PARTIAL LANE

LANE CLOSURE
PARTIAL RAMP CLOSURE

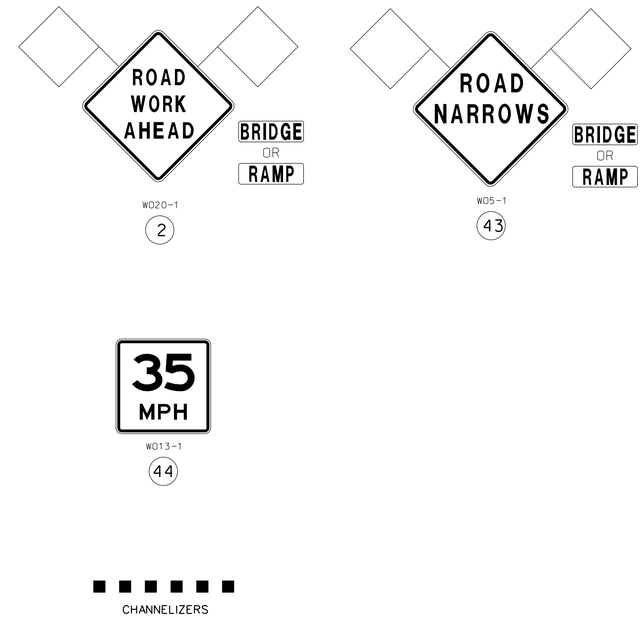


NOTES:

-MAXIMUM LENGTH OF WORK ZONE NOT TO EXCEED 1 MILE.

-SEE SHEET 1 OF TRAFFIC CONTROL FOR SIGN SPACING, DEVICE SPACING AND CHANNELIZING TAPER LENGTHS.

-REMOVE AND/OR MODIFY ANY EXISTING PAVEMENT MARKING AS NEEDED.

-TEMPORARY PAVEMENT MARKING REQUIRED WITH LONG TERM CLOSURES.

PARTIAL OR TOTAL
RAMP CLOSURE
TYPICAL APPLICATIONS
TRAFFIC CONTROL
SHEET 7 OF 48

"THIS MEDIA SHOULD NOT BE CONSIDERED A CERTIFIED DOCUMENT."

| | |
|---|---|
| DATE PREPARED | 12/13/2012 |
| ROUTE | 35/70 |
| STATE | MO |
| DISTRICT | KC |
| SHEET NO. | 32 |
| COUNTY | JACKSON |
| JOB NO. | J412371 |
| CONTRACT ID. | |
| PROJECT NO. | |
| BRIDGE NO. | |

| DESCRIPTION | DATE |
|---|---|
| | |

MISSOURI HIGHWAYS AND TRANSPORTATION COMMISSION

105 WEST CAPITOL
JEFFERSON CITY, MO 65102
1-888-ASK-MODOT (1-888-275-6636)

IF A SEAL IS PRESENT ON THIS SHEET IT HAS BEEN ELECTRONICALLY SEALED AND DATED.

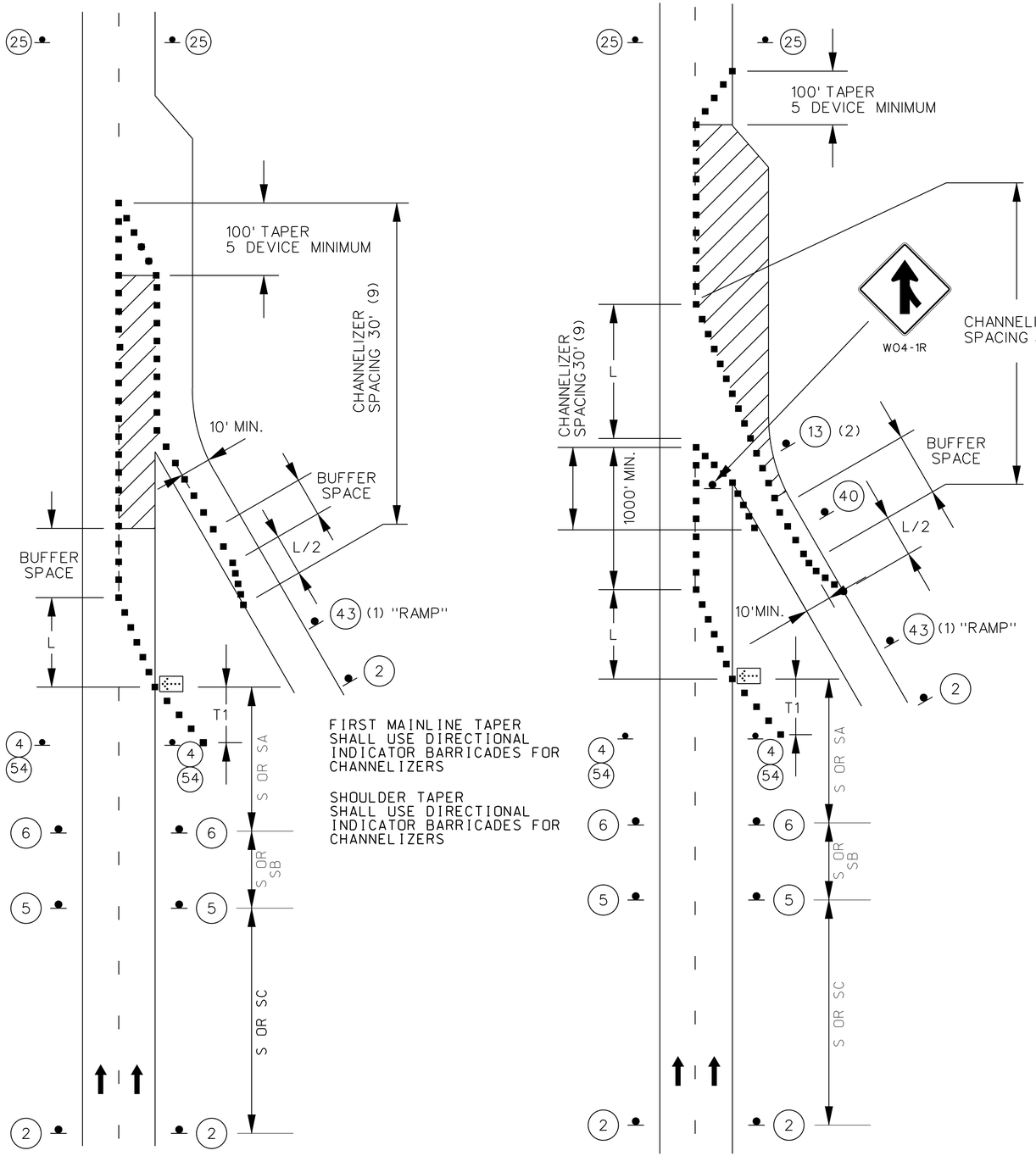


LANE CLOSURE
ENTRANCE RAMP AREAS

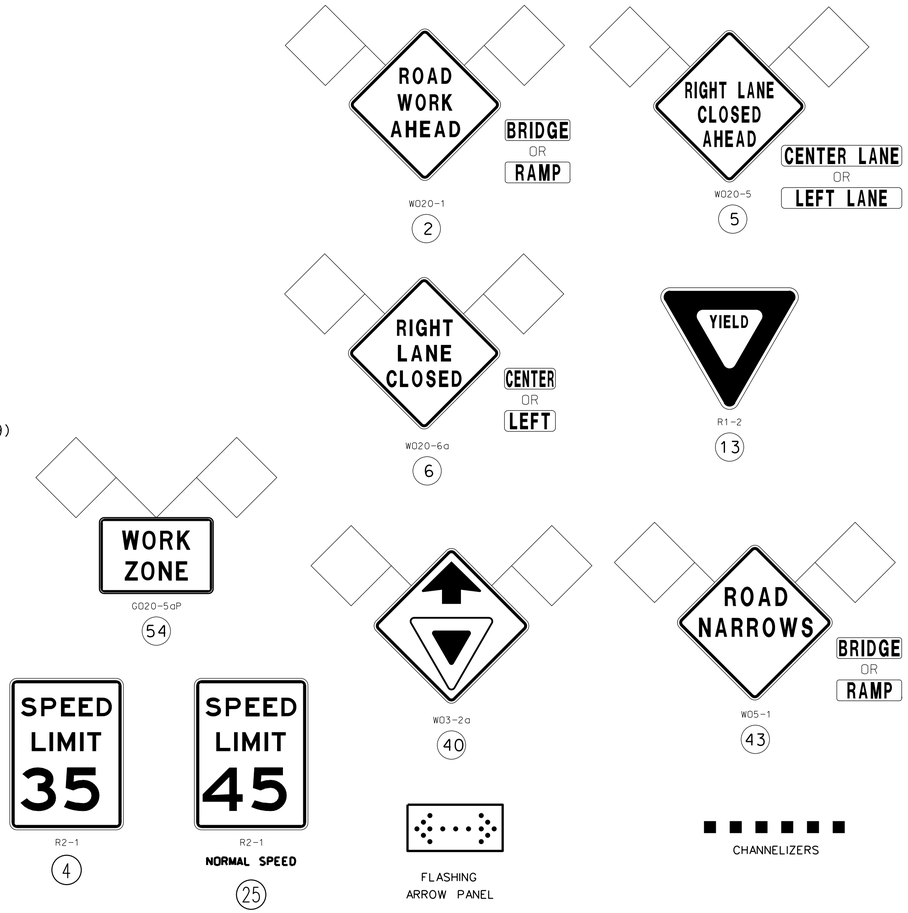


NOTES:

-MAXIMUM LENGTH OF WORK ZONE NOT TO EXCEED 1 MILE.

-SEE SHEET 1 OF TRAFFIC CONTROL FOR SIGN SPACING, DEVICE SPACING AND CHANNELIZING TAPER LENGTHS.

-REMOVE AND/OR MODIFY ANY EXISTING PAVEMENT MARKING AS NEEDED.

-TEMPORARY PAVEMENT MARKING REQUIRED WITH LONG TERM CLOSURES.

-FOR RAMPS WITH SHARP CURVES OR MULTIPLE LANES, RAMP SIGNS MAY BE PLACED ON BOTH SIDES OF THE RAMP.

-FOR NIGHT WORK ONLY FIRST MAINLINE TAPER SHALL USE SEQUENTIAL FLASHING WARNING LIGHTS.

(1) SIGN (43) REQUIRED WHEN RAMP WIDTH IS REDUCED.

(2) SIGN (13) SHOULD BE PLACED ON THE RAMP TO PROVIDE ADEQUATE VISIBILITY OF MAINLINE TRAFFIC.

LANE CLOSURE
ENTRANCE RAMP
TYPICAL APPLICATIONS
TRAFFIC CONTROL
SHEET 8 OF 48

"THIS MEDIA SHOULD NOT BE CONSIDERED A CERTIFIED DOCUMENT."

| | |
|---|---|
| DATE PREPARED | 12/13/2012 |
| ROUTE | 35/70 |
| STATE | MO |
| DISTRICT | KC |
| SHEET NO. | 33 |
| COUNTY | JACKSON |
| JOB NO. | J412371 |
| CONTRACT ID. | |
| PROJECT NO. | |
| BRIDGE NO. | |

DESCRIPTION

DATE

MISSOURI HIGHWAYS AND TRANSPORTATION COMMISSION

105 WEST CAPITOL
JEFFERSON CITY, MO 65102
1-888-ASK-MODOT (1-888-275-6636)

IF A SEAL IS PRESENT ON THIS SHEET IT HAS BEEN ELECTRONICALLY SEALED AND DATED.

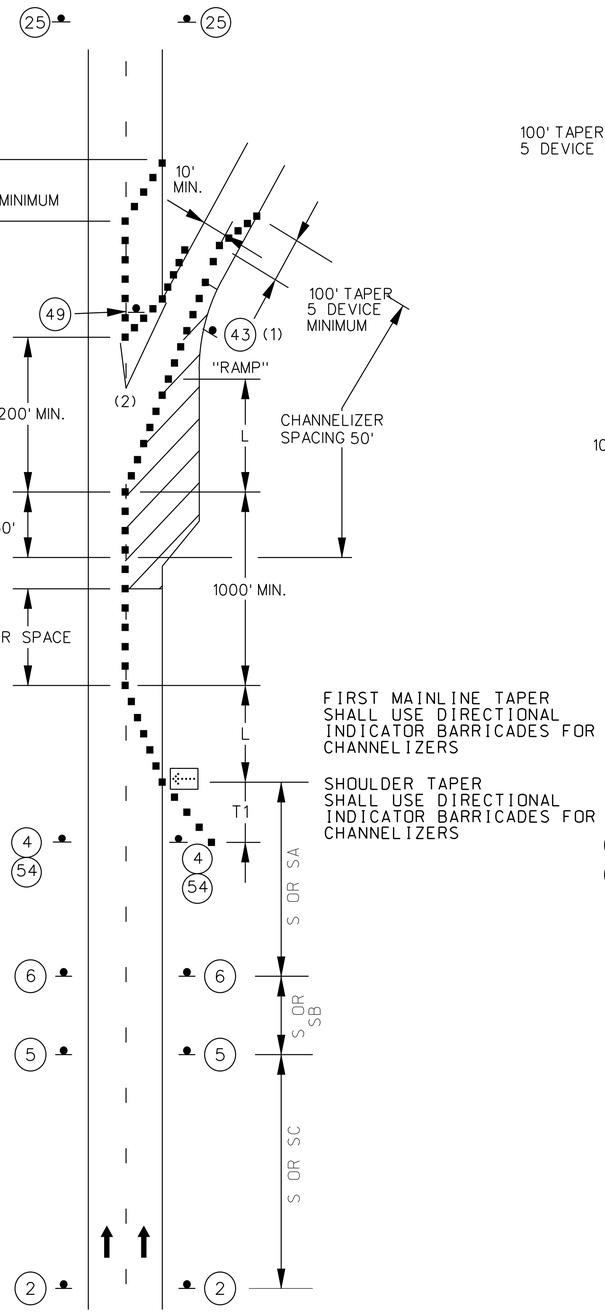


LANE CLOSURE
EXIT RAMP AREAS

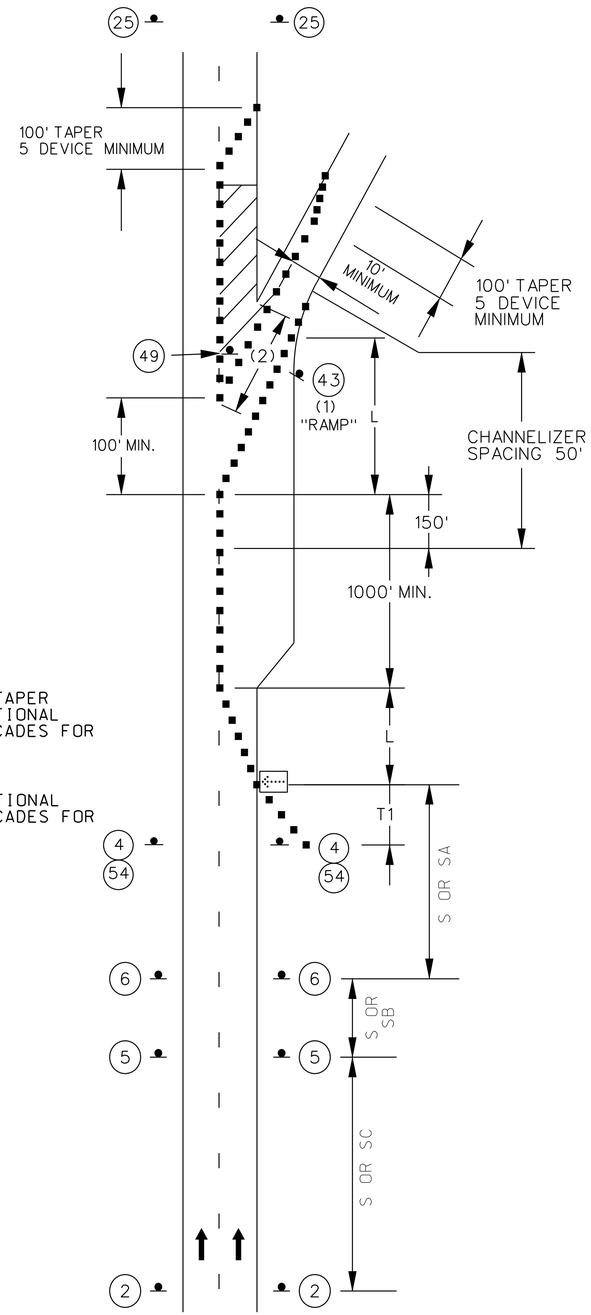


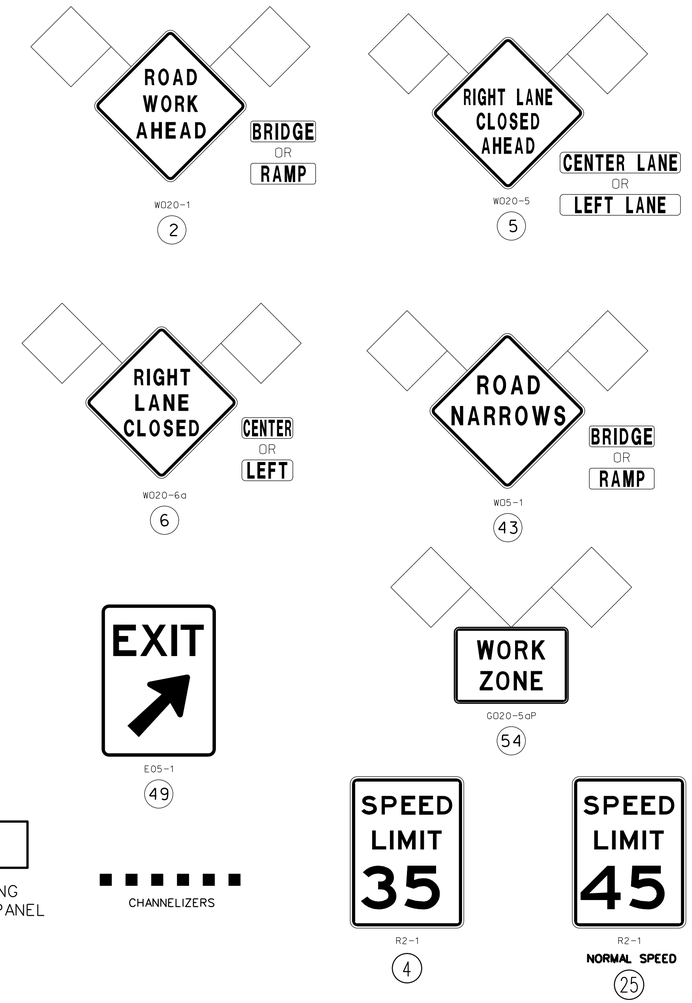


NOTES:

-MAXIMUM LENGTH OF WORK ZONE NOT TO EXCEED 1 MILE.

-SEE SHEET 1 OF TRAFFIC CONTROL FOR SIGN SPACING, DEVICE SPACING AND CHANNELIZING TAPER LENGTHS.

-REMOVE AND/OR MODIFY ANY EXISTING PAVEMENT MARKING AS NEEDED.

-TEMPORARY PAVEMENT MARKING REQUIRED WITH LONG TERM CLOSURES.

-FOR RAMPS WITH SHARP CURVES OR MULTIPLE LANES, RAMP SIGNS MAY BE PLACED ON BOTH SIDES OF THE RAMP.

-FOR NIGHT WORK ONLY FIRST MAINLINE TAPER SHALL USE SEQUENTIAL FLASHING WARNING LIGHTS.

(1) SIGN 43 REQUIRED WHEN RAMP WIDTH IS REDUCED.

(2) FIVE DEVICE MINIMUM.

LANE CLOSURE
EXIT RAMP
TYPICAL APPLICATIONS
TRAFFIC CONTROL
SHEET 9 OF 48

"THIS MEDIA SHOULD NOT BE CONSIDERED A CERTIFIED DOCUMENT."

| | |
|---|---|
| DATE PREPARED | 12/13/2012 |
| ROUTE | 35/70 |
| STATE | MO |
| DISTRICT | KC |
| SHEET NO. | 34 |
| COUNTY | JACKSON |
| JOB NO. | J412371 |
| CONTRACT ID. | |
| PROJECT NO. | |
| BRIDGE NO. | |

| DATE | DESCRIPTION |
|---|---|
| | |

MISSOURI HIGHWAYS AND TRANSPORTATION COMMISSION
105 WEST CAPITOL
JEFFERSON CITY, MO 65102
1-888-ASK-MODOT (1-888-275-6636)

IF A SEAL IS PRESENT ON THIS SHEET IT HAS BEEN ELECTRONICALLY SEALED AND DATED.

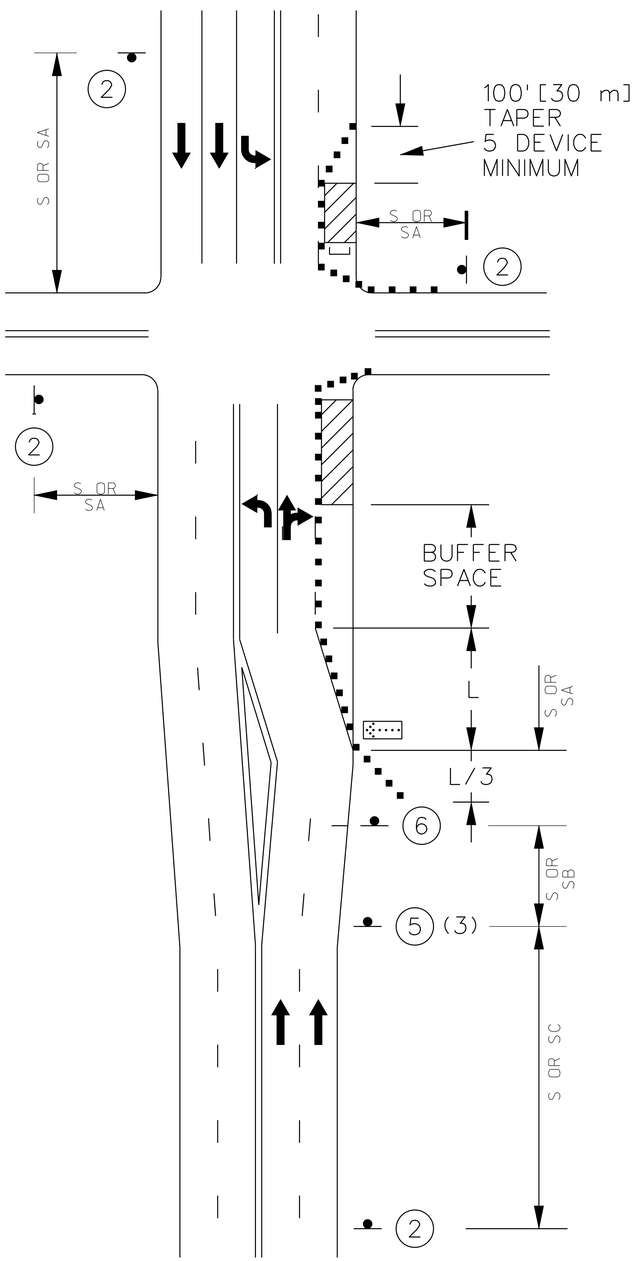


WORK ON NEAR OR FAR SIDE

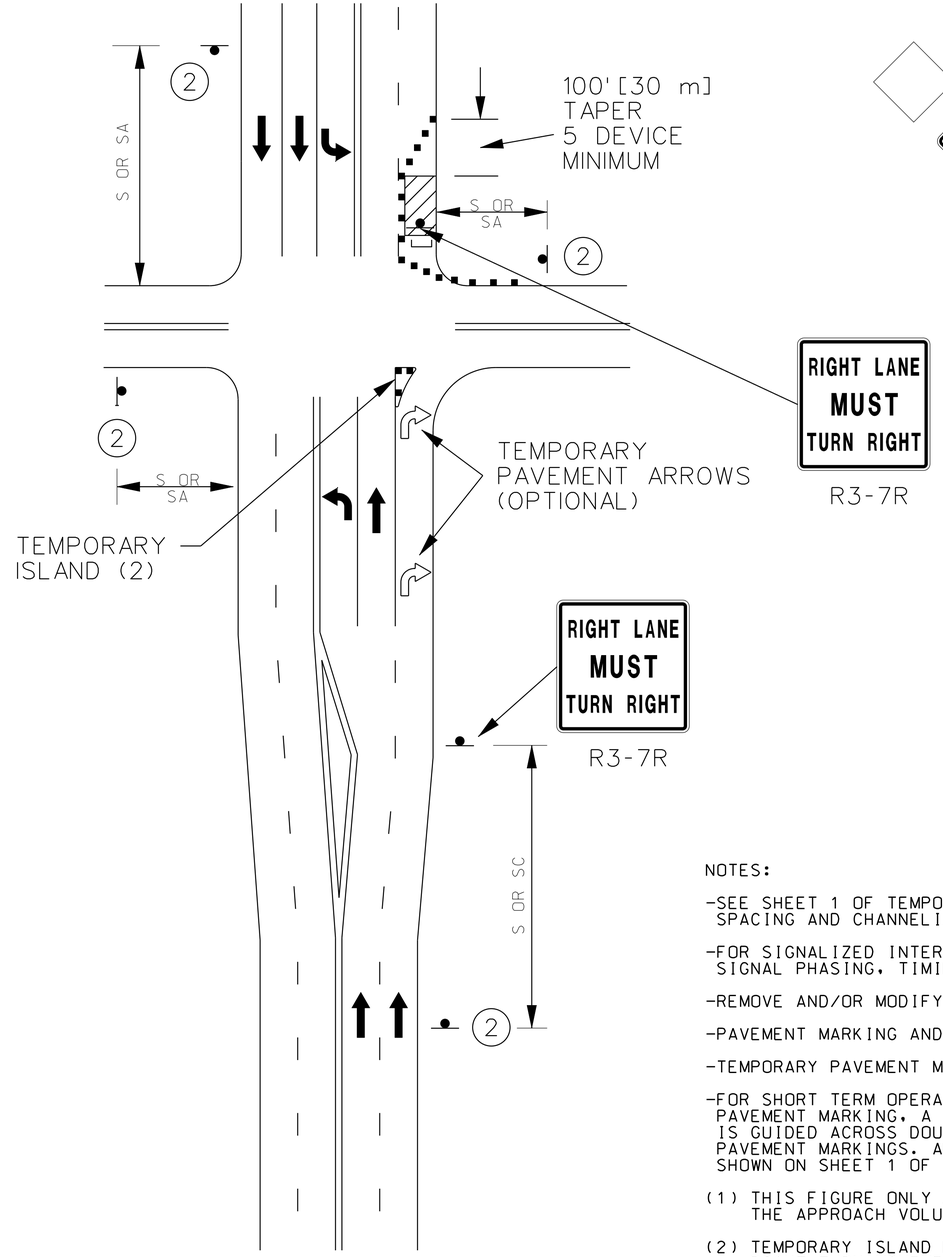


WORK ON FAR SIDE ONLY (1)

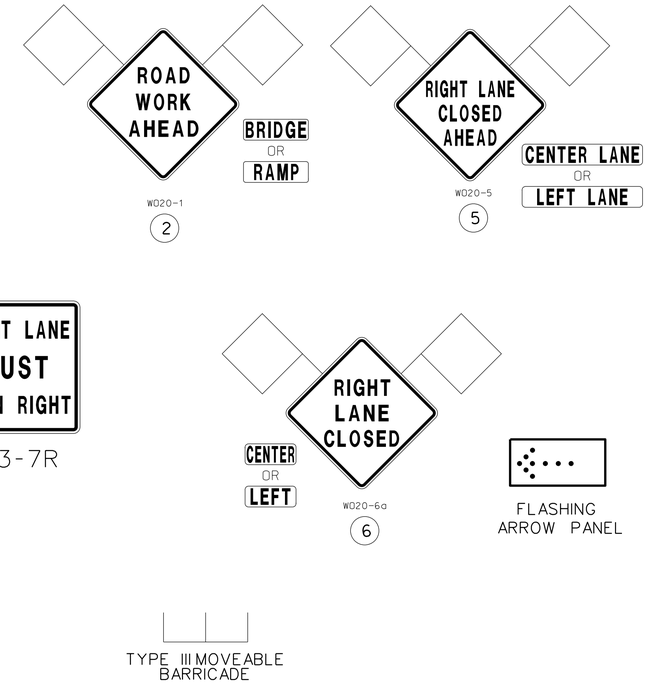


NOTES:

-SEE SHEET 1 OF TEMPORARY TRAFFIC CONTROL FOR SIGN SPACING, DEVICE SPACING AND CHANNELIZING TAPER LENGTHS.

-FOR SIGNALIZED INTERSECTIONS, ADJUSTMENTS MAY NEED TO BE MADE TO SIGNAL PHASING, TIMING, INDICATIONS OR DETECTOR SETTINGS.

-REMOVE AND/OR MODIFY ANY EXISTING PAVEMENT MARKING AS NEEDED.

-PAVEMENT MARKING AND BARRICADES OPTIONAL FOR SHORT TERM OPERATIONS

-TEMPORARY PAVEMENT MARKING REQUIRED WITH LONG TERM CLOSURES.

-FOR SHORT TERM OPERATIONS, WHERE IT IS NOT FEASIBLE TO MODIFY PAVEMENT MARKING, A 10' DEVICE SPACING IS USED WHERE TRAFFIC IS GUIDED ACROSS DOUBLE YELLOW LINES OR OTHER CONFLICTING PAVEMENT MARKINGS. ALL OTHER SPACINGS ARE ONE HALF OF THE SPACING SHOWN ON SHEET 1 OF TEMPORARY TRAFFIC CONTROL.

(1) THIS FIGURE ONLY APPLIES WHERE A SIGNIFICANT PERCENTAGE OF THE APPROACH VOLUME.

(2) TEMPORARY ISLAND MAY BE USED TO EMPHASIZE THE MANDATORY RIGHT TURN MOVEMENT WHERE THERE IS A SUFFICENT RIGHT TURN RADIUS.

(3) SIGN (5) MAY BE OMITTED IN LOW SPEED URBAN AREAS WHERE THERE IS NOT SUFFICIENT SPACE FOR THE FULL SIGN SERIES.

LANE CLOSURE
RIGHT LANE CLOSURE AT INTERSECTION

RIGHT LANE CLOSURE
AT INTERSECTION
TYPICAL APPLICATIONS
TRAFFIC CONTROL
SHEET 10 OF 48

"THIS MEDIA SHOULD NOT BE CONSIDERED A CERTIFIED DOCUMENT."

| | |
|---|---|
| DATE PREPARED | 12/13/2012 |
| ROUTE | 35/70 |
| STATE | MO |
| DISTRICT | KC |
| SHEET NO. | 35 |
| COUNTY | JACKSON |
| JOB NO. | J412371 |
| CONTRACT ID. | |
| PROJECT NO. | |
| BRIDGE NO. | |

| DATE | DESCRIPTION |
|---|---|

MISSOURI HIGHWAYS AND TRANSPORTATION COMMISSION
105 WEST CAPITOL
JEFFERSON CITY, MO 65102
1-888-ASK-MODOT (1-888-275-6636)

IF A SEAL IS PRESENT ON THIS SHEET IT HAS BEEN ELECTRONICALLY SEALED AND DATED.

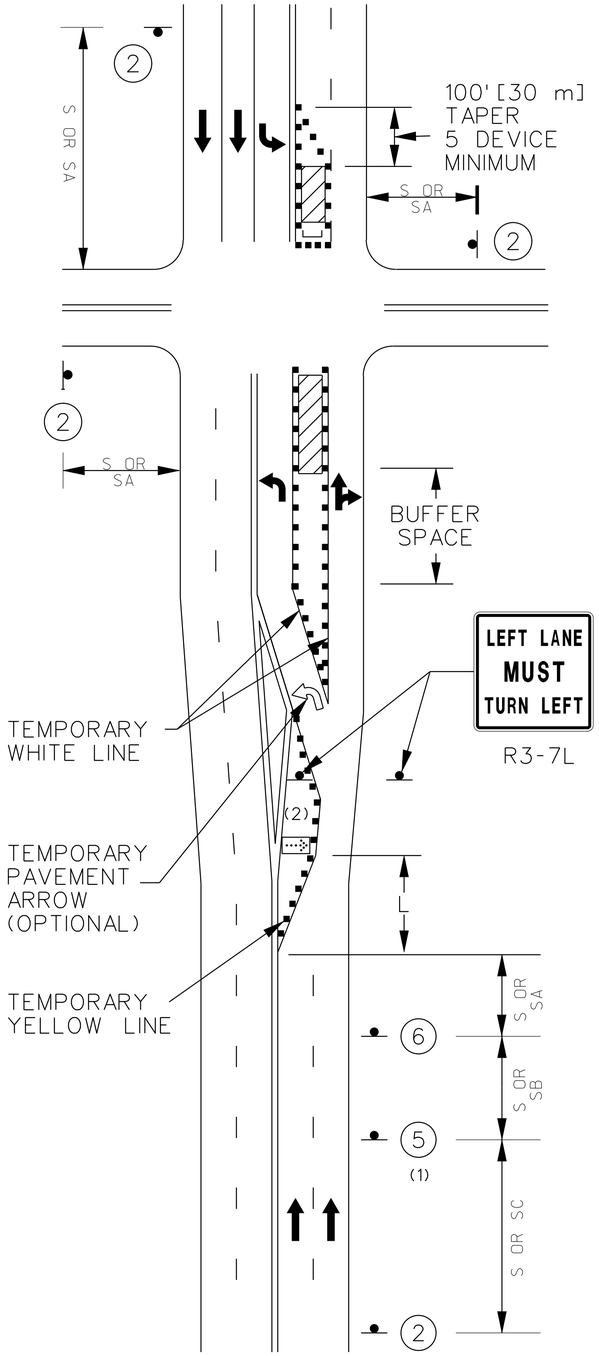


WORK ON NEAR OR FAR SIDE

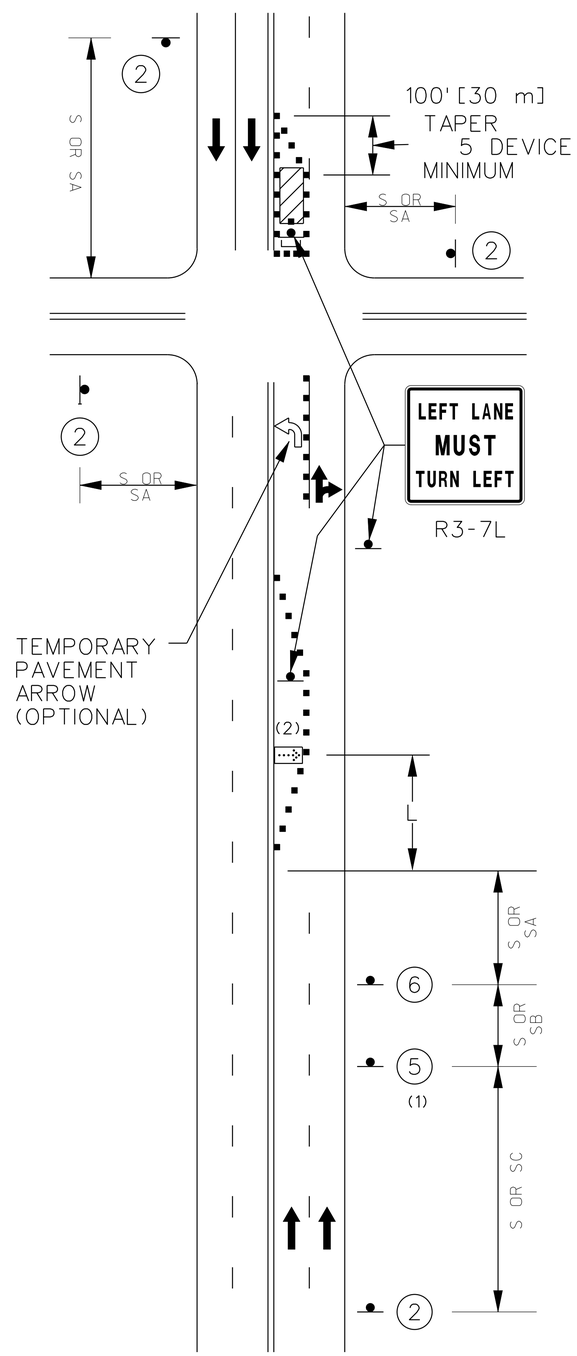


WORK ON FAR SIDE ONLY

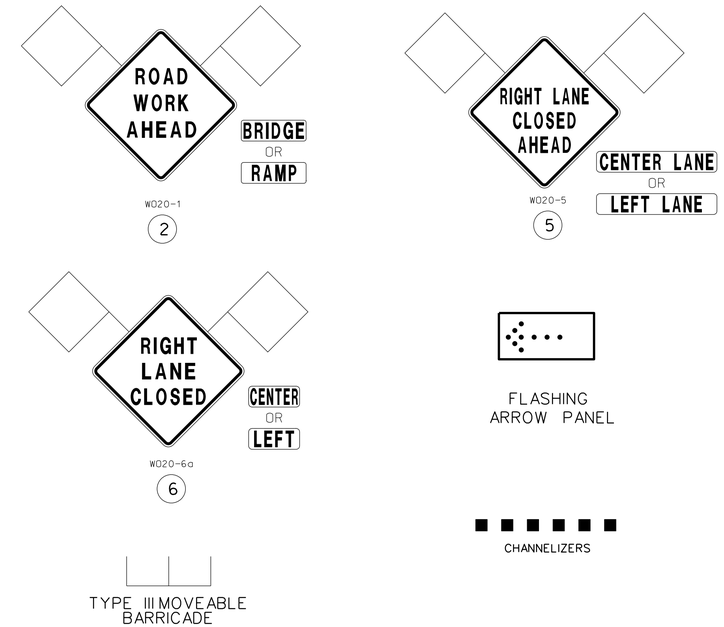


NOTES:

-SEE SHEET 1 OF TEMPORARY TRAFFIC CONTROL FOR SIGN SPACING, DEVICE SPACING AND CHANNELIZING TAPER LENGTHS.

-FOR SIGNALIZED INTERSECTIONS, ADJUSTMENTS MAY NEED TO BE MADE TO SIGNAL PHASING, TIMING, INDICATIONS OR DETECTOR SETTINGS.

-REMOVE AND/OR MODIFY ANY EXISTING PAVEMENT MARKING AS NEEDED.

-PAVEMENT MARKING AND BARRICADES OPTIONAL FOR SHORT TERM OPERATIONS

-TEMPORARY PAVEMENT MARKING REQUIRED WITH LONG TERM CLOSURES.

-FOR SHORT TERM OPERATIONS, WHERE IT IS NOT FEASIBLE TO MODIFY PAVEMENT MARKING, A 10' DEVICE SPACING IS USED WHERE TRAFFIC IS GUIDED ACROSS DOUBLE YELLOW LINES OR OTHER CONFLICTING PAVEMENT MARKINGS. ALL OTHER SPACINGS ARE ONE HALF OF THE SPACING SHOWN ON SHEET 1 OF TEMPORARY TRAFFIC CONTROL.

(1) SIGN (5) MAY BE OMITTED IN LOW SPEED URBAN AREAS WHERE THERE IS NOT SUFFICIENT SPACE FOR THE FULL SIGN SERIES.

(2) THE FLASHING ARROW BOARD SHOULD BE LOCATED AT THE BEGINNING OF THE MERGING TAPER WHEN MEDIAN WIDTH ALLOWS THIS PLACEMENT

LANE CLOSURE
LEFT LANE AT INTERSECTION

LEFT LANE AT
INTERSECTION CLOSURE
TYPICAL APPLICATIONS
TRAFFIC CONTROL
SHEET 11 OF 48

"THIS MEDIA SHOULD NOT BE CONSIDERED A CERTIFIED DOCUMENT."

| | |
|---|---|
| DATE PREPARED | 12/13/2012 |
| ROUTE | 35/71 |
| STATE | MO |
| DISTRICT | KC |
| SHEET NO. | 36 |
| COUNTY | JACKSON |
| JOB NO. | J412371 |
| CONTRACT ID. | |
| PROJECT NO. | |
| BRIDGE NO. | |

DESCRIPTION

DATE

MISSOURI HIGHWAYS AND TRANSPORTATION COMMISSION

105 WEST CAPITOL
JEFFERSON CITY, MO 65102
1-888-ASK-MODOT (1-888-275-6636)

IF A SEAL IS PRESENT ON THIS SHEET IT HAS BEEN ELECTRONICALLY SEALED AND DATED.

## TRAFFIC CONTROL LEGEND

- SIGN (SINGLE SIDED)
- SIGN (DOUBLE SIDED)
- FLAGGER
- CONE
- CHANNELIZER
- BARRICADE
- FLASHING ARROW PANEL
- CHANGEABLE MESSAGE BOARD

S.W.T. SOLID WHITE PREFORMED REMOVABLE PAVEMENT MARKING TAPE

S.Y.T. SOLID YELLOW PREFORMED REMOVABLE PAVEMENT MARKING TAPE

D.W.T. DOTTED WHITE PREFORMED REMOVABLE PAVEMENT MARKING TAPE (3' STRIPE X 9' GAP)

S-# SAND FILLED IMPACT ATTENUATOR

## GENERAL NOTES:

- SEE STANDARD PLAN 616.10 FOR DETAILS AND ITEMS NOT SHOWN
- EXISTING SIGNS SHALL BE COVERED DURING WORKING HOURS ONLY IF IN CONFLICT WITH TRAFFIC CONTROL PLANS.
- NO DIRECT PAYMENT WILL BE MADE FOR RELOCATING, COVERING, UNCOVERING OR REMOVING SIGNS.
- LOCATE FLASHING ARROW PANEL AT BEGINNING OF TAPER WHEN FEASIBLE, ARROW PANELS ARE ALWAYS LOCATED BEHIND CHANNELIZERS OR CONES.
- REMOVE AND/OR MODIFY ANY EXISTING PAVEMENT MARKING AS NEEDED.
- FIRST MAINLINE TAPER SHALL USE SEQUENTIAL FLASHING WARNING LIGHTS.

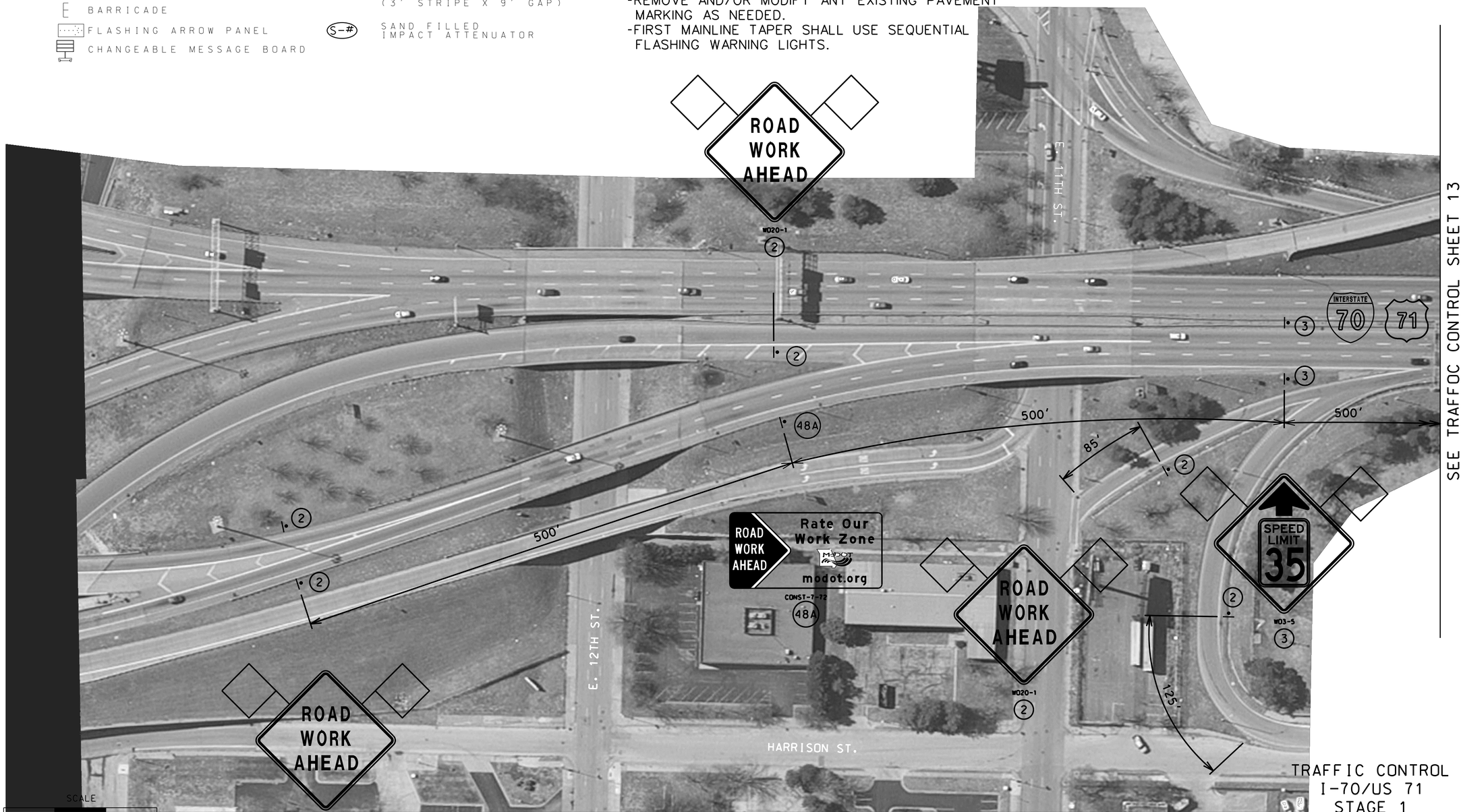


SEE TRAFFOC CONTROL SHEET 13

TRAFFIC CONTROL
I-70/US 71
STAGE 1
SHEET 12 OF 48

"THIS MEDIA SHOULD NOT BE CONSIDERED A CERTIFIED DOCUMENT."

| | |
|---|---|
| DATE PREPARED | 12/13/2012 |
| ROUTE | 70/35 |
| STATE | MO |
| DISTRICT | KC |
| SHEET NO. | 37 |
| COUNTY | JACKSON |
| JOB NO. | J4I2371 |
| CONTRACT ID. | |
| PROJECT NO. | |
| BRIDGE NO. | L07816, L07817 |

| DATE | DESCRIPTION |
|---|---|
| | |

MISSOURI HIGHWAYS AND TRANSPORTATION COMMISSION

105 WEST CAPITOL
JEFFERSON CITY, MO 65102
1-888-ASK-MODOT (1-888-275-6636)

IF A SEAL IS PRESENT ON THIS SHEET IT HAS BEEN ELECTRONICALLY SEALED AND DATED.

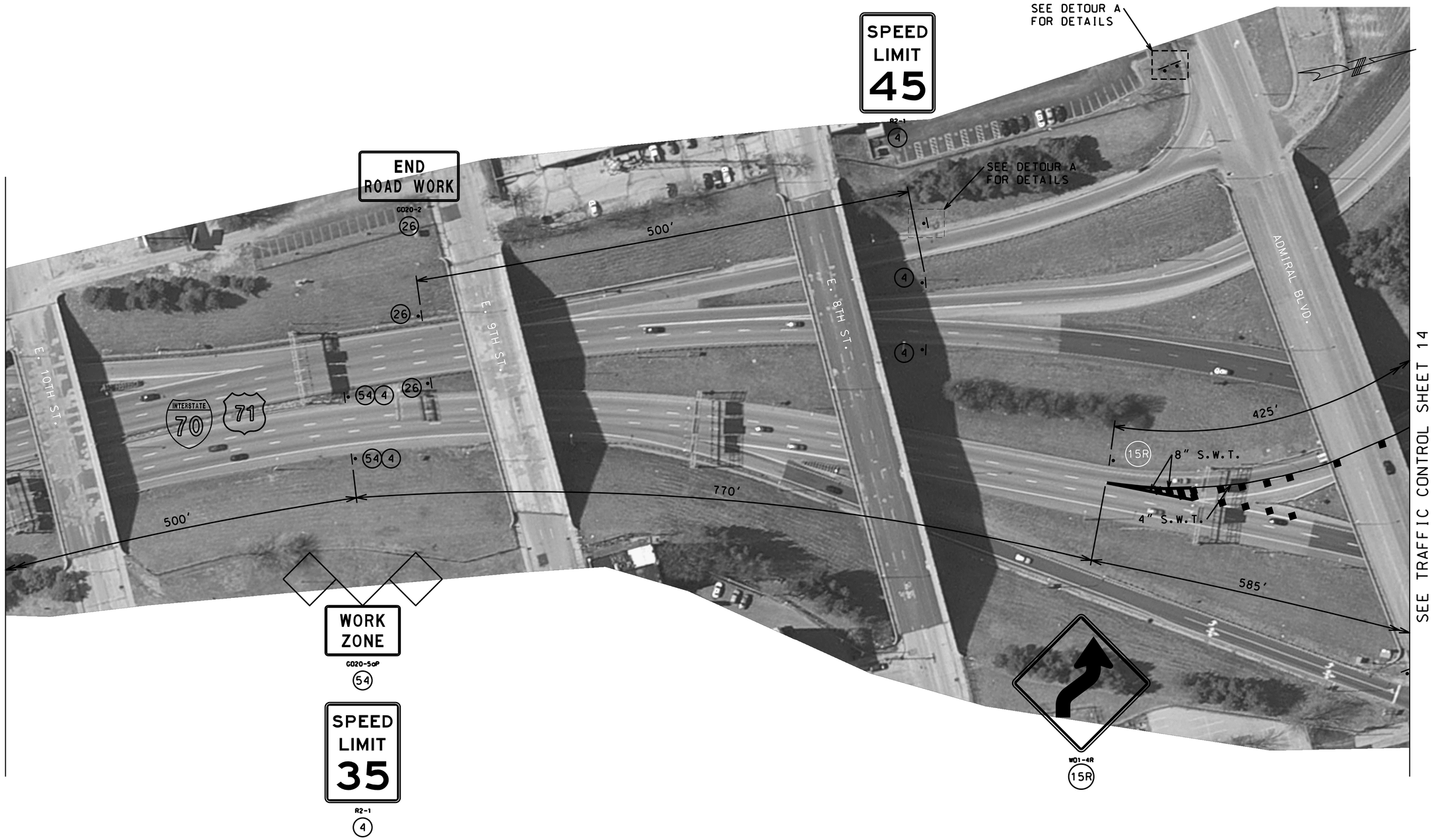


SCALE

0 50 100 150

TRAFFIC CONTROL
I-70/US 71
STAGE 1
SHEET 13 OF 48

"THIS MEDIA SHOULD NOT BE CONSIDERED A CERTIFIED DOCUMENT."

| | |
|---|---|
| DATE PREPARED | 12/13/2012 |
| ROUTE | 70/35 |
| STATE | MO |
| DISTRICT | KC |
| SHEET NO. | 38 |
| COUNTY | JACKSON |
| JOB NO. | J4I2371 |
| CONTRACT ID. | |
| PROJECT NO. | |
| BRIDGE NO. | |

| DESCRIPTION | DATE |
|---|---|
| | |

MISSOURI HIGHWAYS AND TRANSPORTATION COMMISSION

105 WEST CAPITOL
JEFFERSON CITY, MO 65102
1-888-ASK-MODOT (1-888-275-6636)

IF A SEAL IS PRESENT ON THIS SHEET IT HAS BEEN ELECTRONICALLY SEALED AND DATED.

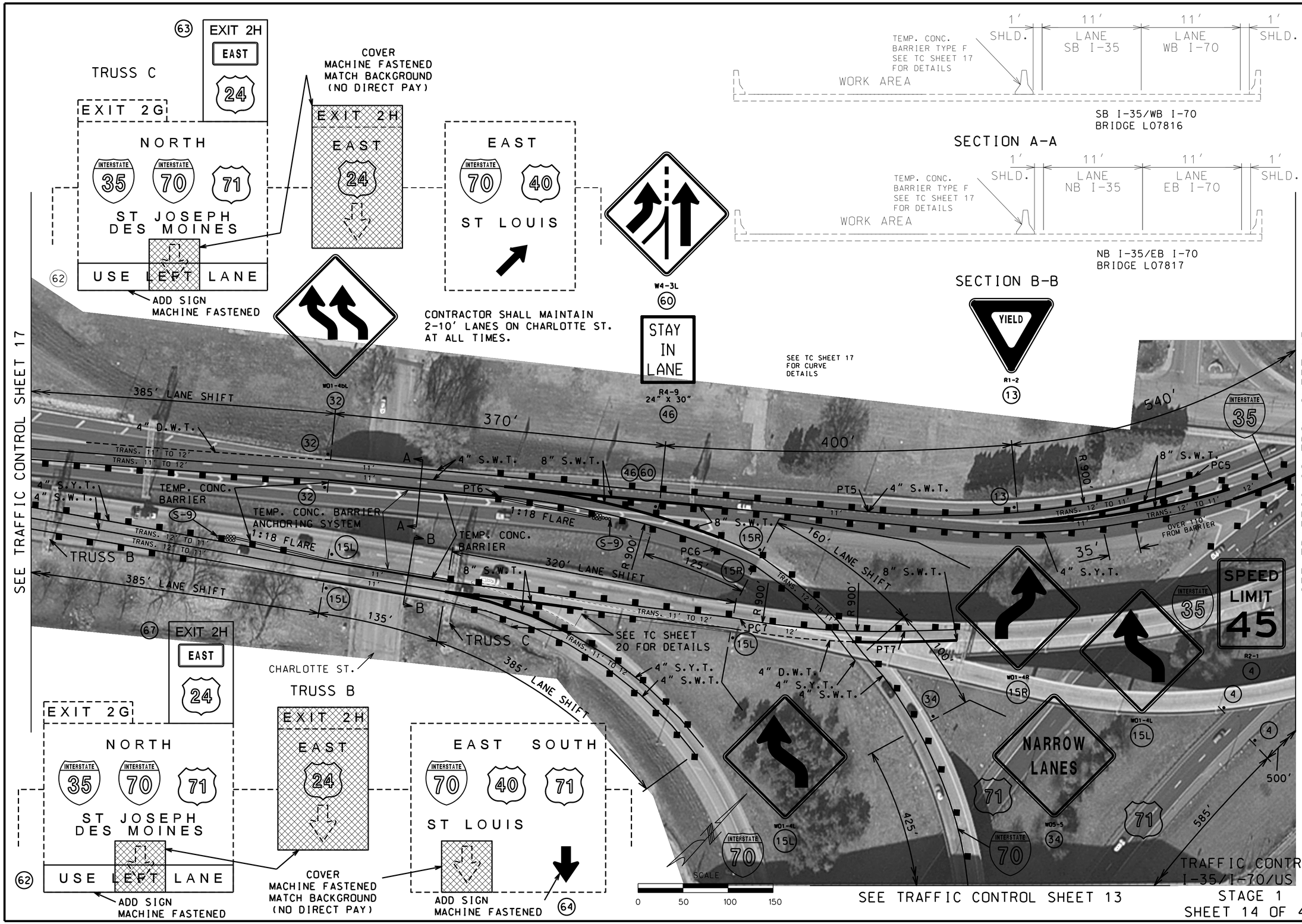


"THIS MEDIA SHOULD NOT BE CONSIDERED A CERTIFIED DOCUMENT."

| | |
|---|---|
| DATE PREPARED | 12/13/2012 |
| ROUTE | 70/35 |
| STATE | MO |
| DISTRICT | KC |
| SHEET NO. | 39 |
| COUNTY | JACKSON |
| JOB NO. | J4I2371 |
| CONTRACT ID. | |
| PROJECT NO. | |
| BRIDGE NO. | L07816, L07817 |

| DATE | DESCRIPTION |
|---|---|
| | |

IF A SEAL IS PRESENT ON THIS SHEET IT HAS BEEN ELECTRONICALLY SEALED AND DATED.

MISSOURI HIGHWAYS AND TRANSPORTATION COMMISSION

105 WEST CAPITOL
JEFFERSON CITY, MO 65102
1-888-ASK-MODOT (1-888-275-6636)

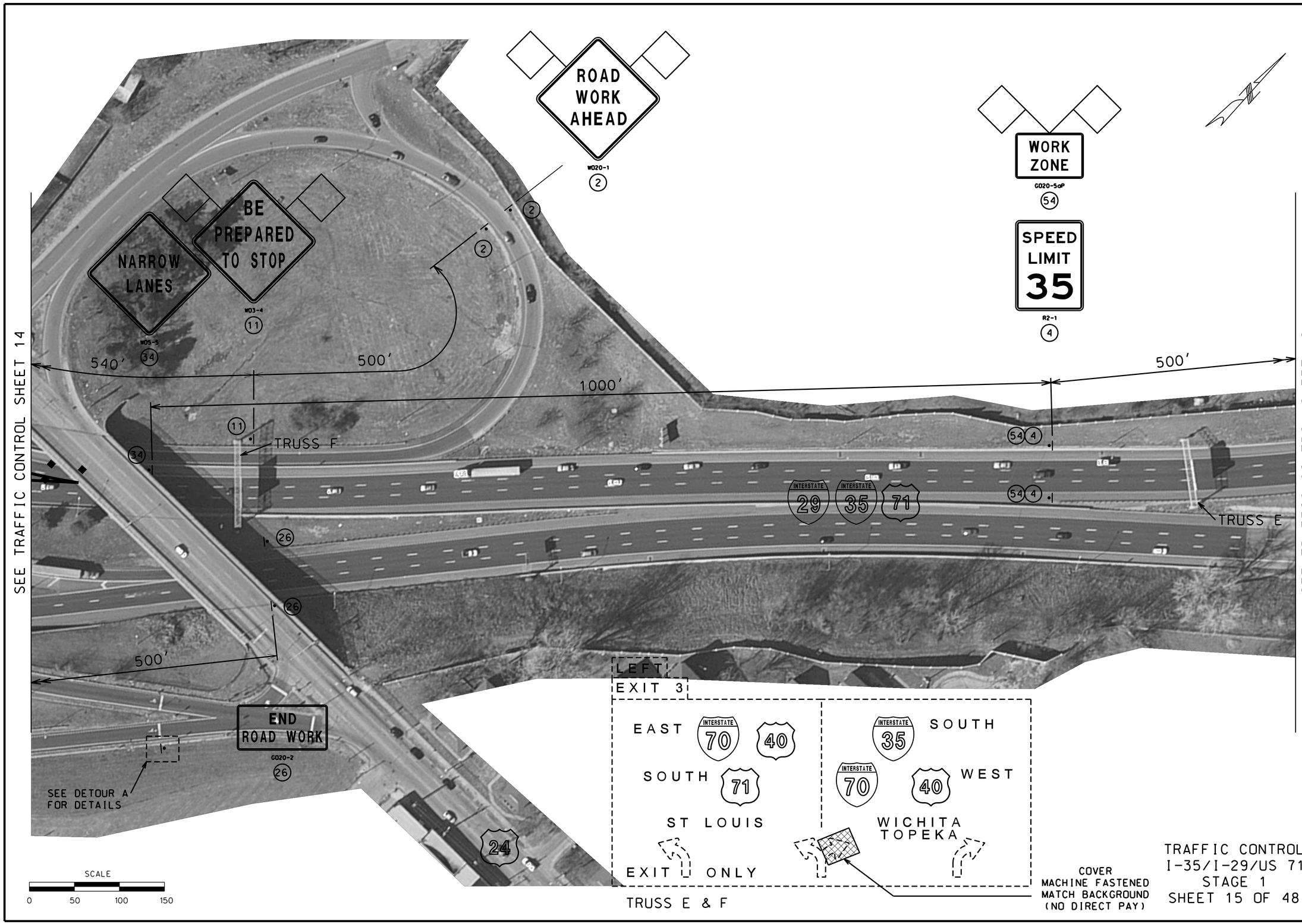


TRAFFIC CONTROL
I-35/I-29/US 71
STAGE 1
SHEET 15 OF 48

"THIS MEDIA SHOULD NOT BE CONSIDERED A CERTIFIED DOCUMENT."

| | |
|---|---|
| DATE PREPARED | 12/13/2012 |
| ROUTE | 70/35 |
| STATE | MO |
| DISTRICT | KC |
| SHEET NO. | 40 |
| COUNTY | JACKSON |
| JOB NO. | J4I2371 |
| CONTRACT ID. | |
| PROJECT NO. | |
| BRIDGE NO. | L07816, L07817 |

| DATE | DESCRIPTION |
|---|---|
| | |

MISSOURI HIGHWAYS AND TRANSPORTATION COMMISSION

105 WEST CAPITOL
JEFFERSON CITY, MO 65102
1-888-ASK-MODOT (1-888-275-6636)

IF A SEAL IS PRESENT ON THIS SHEET IT HAS BEEN ELECTRONICALLY SEALED AND DATED.

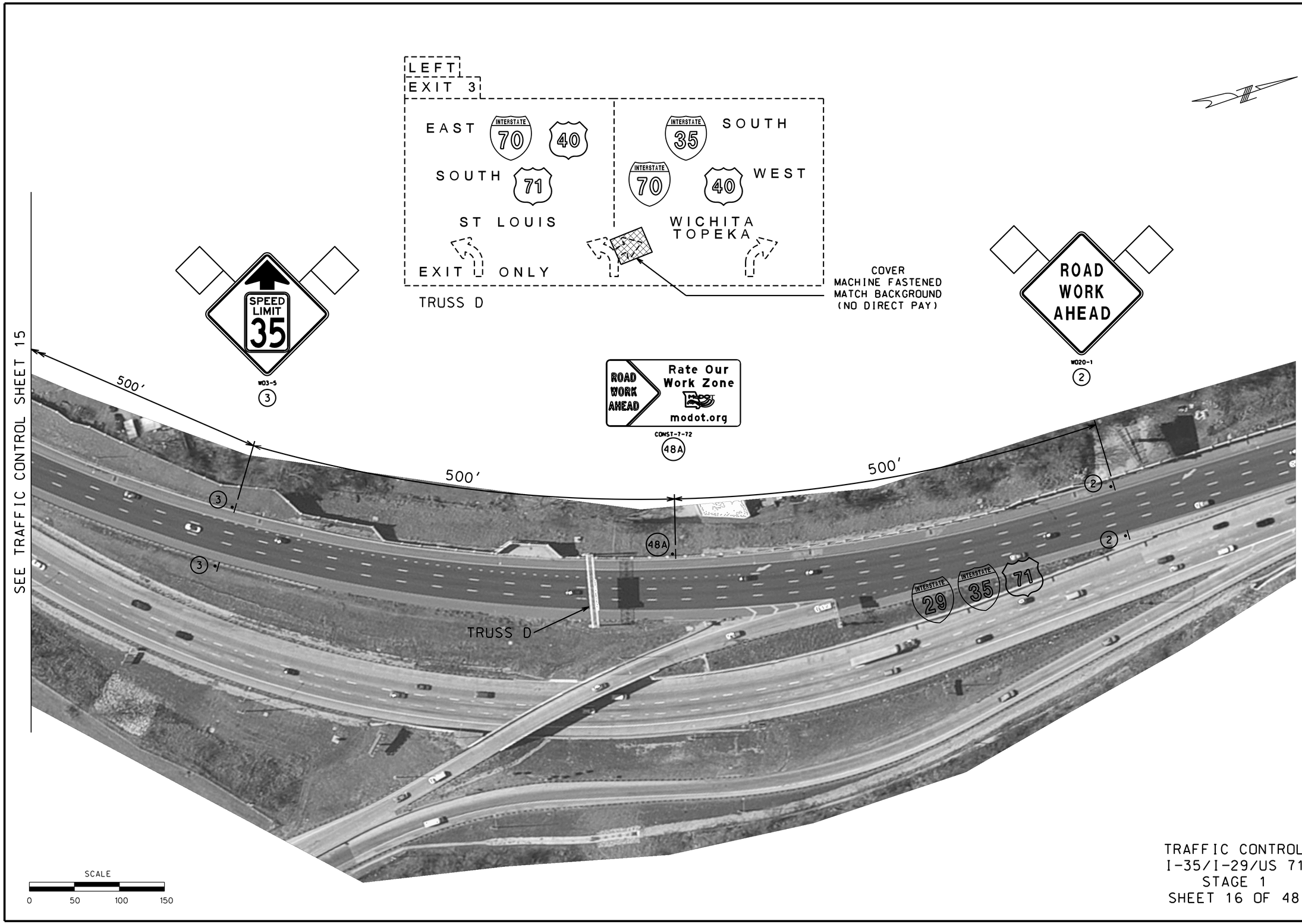


TRAFFIC CONTROL
I-35/I-29/US 71
STAGE 1
SHEET 16 OF 48

"THIS MEDIA SHOULD NOT BE CONSIDERED A CERTIFIED DOCUMENT."

| | |
|---|---|
| DATE PREPARED | 12/13/2012 |
| ROUTE | 70/35 |
| STATE | MO |
| DISTRICT | KC |
| SHEET NO. | 41 |
| COUNTY | JACKSON |
| JOB NO. | J4I2371 |
| CONTRACT ID. | |
| PROJECT NO. | |
| BRIDGE NO. | L07816, L07817 |

| DESCRIPTION | DATE |
|---|---|
| | |

MISSOURI HIGHWAYS AND TRANSPORTATION COMMISSION

105 WEST CAPITOL
JEFFERSON CITY, MO 65102
1-888-ASK-MODOT (1-888-275-6636)

IF A SEAL IS PRESENT ON THIS SHEET IT HAS BEEN ELECTRONICALLY SEALED AND DATED.

| STAGE 1 CURVES | | | |
|---|---|---|---|
| POINTS | NORTHING | EASTING | REMARKS |
| PC5 | 1070662.609 | 2768980.234 | |
| PI5 | 1071501.436 | 2768654.092 | RADIUS 900′ |
| PT5 | 1070602.036 | 2768621.244 | |
| PC6 | 1070551.412 | 2768456.131 | |
| PI6 | 1069716.452 | 2768200.875 | RADIUS 900′ |
| PT6 | 1070595.028 | 2768210.353 | |
| PC7 | 1070474.71 | 2768486.511 | |
| PI7 | 1071336.473 | 2768623.137 | RADIUS 900′ |
| PT7 | 1070472.251 | 2768669.581 | |
| | | | |

*APPROXIMATE LOCATIONS MAY BE ADJUSTED TO FIELD CONDITIONS

| STAGE 1 TEMPORARY CONCRETE BARRIER, TYPE F* | | | | |
|---|---|---|---|---|
| TYPE | LOCATION | FROM | TO | REMARKS |
| TIE-DOWN STRAP | WB-70 | 1070579.33 N<br>2768313.93 E | 1070594.03 N<br>2768210.32 E | ALONG TEMP. SHLD. |
| TIE-DOWN STRAP | WB-70 | 1070594.03 N<br>2768210.32 E | 1070596.70 N<br>2768137.42 E | ALONG TEMP. SHLD. |
| ANCHORING SYSTEM | WB-70 | 1070596.70 N<br>2768137.42 E | 1070599.88 N<br>2768050.79 E | ALONG TEMP. SHLD. |
| TIE-DOWN STRAP | WB-70 | 1070599.88 N<br>2768050.79 E | 1070600.98 N<br>2768020.84 E | ALONG TEMP. SHLD. |
| TIE-DOWN STRAP | EB-70 | 1070530.23 N<br>2767921.25 E | 1070511.78 N<br>2768025.02 E | ALONG TEMP. SHLD. |
| TIE-DOWN STRAP | EB-70 | 1070511.78 N<br>2768025.02 E | 1070509.41 N<br>2768047.04 E | ALONG TEMP. SHLD. |
| ANCHORING SYSTEM | EB-70 | 1070509.41 N<br>2768047.04 E | 1070500.07 N<br>2768133.96 E | ALONG TEMP. SHLD. |
| TIE-DOWN STRAP | EB-70 | 1070500.07 N<br>2768133.96 E | 1070497.37 N<br>2768159.02 E | ALONG TEMP. SHLD. |

*APPROXIMATE LOCATIONS MAY BE ADJUSTED TO FIELD CONDITIONS

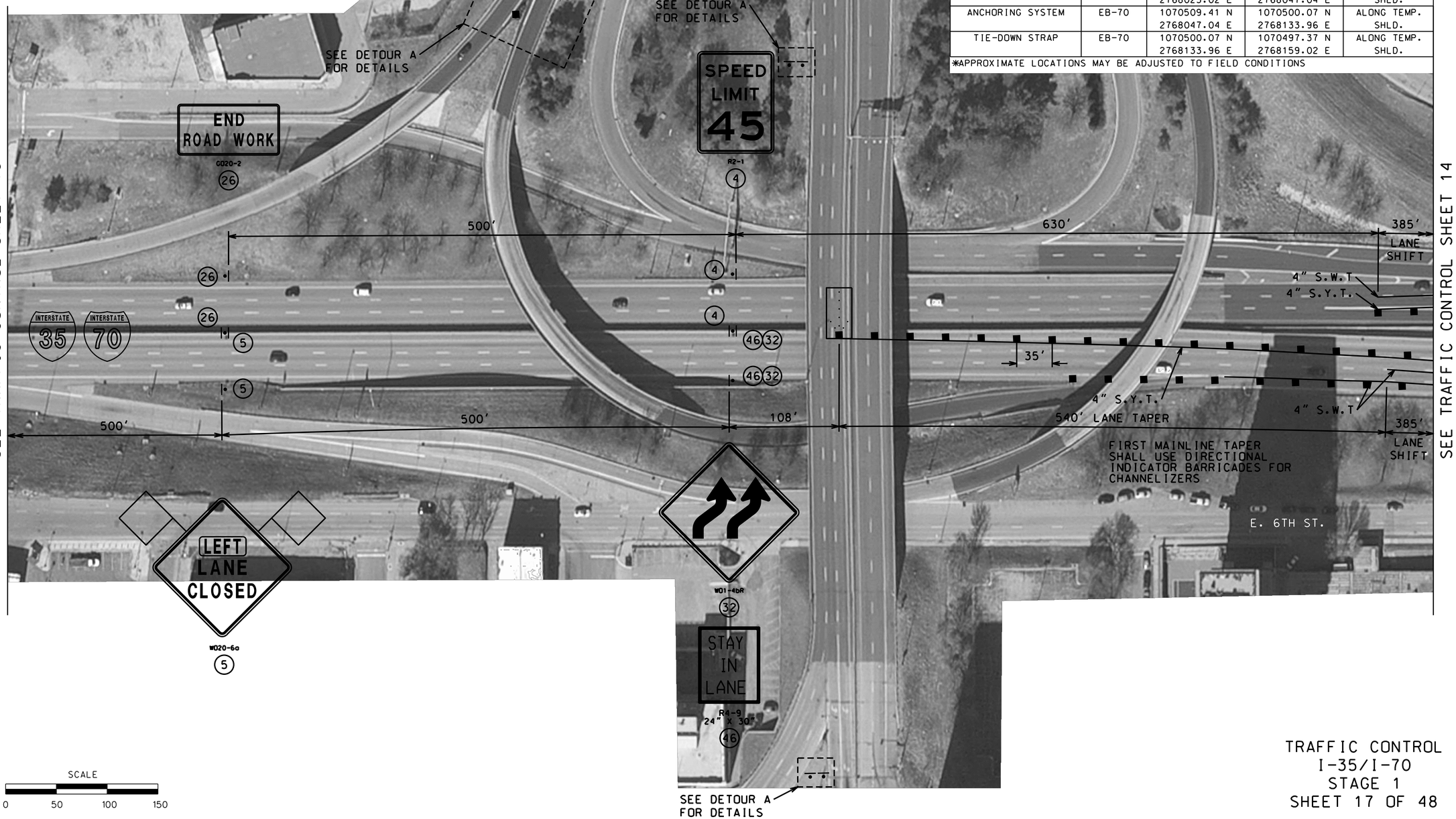


TRAFFIC CONTROL
I-35/I-70
STAGE 1
SHEET 17 OF 48

"THIS MEDIA SHOULD NOT BE CONSIDERED A CERTIFIED DOCUMENT."

| | |
|---|---|
| DATE PREPARED | 12/13/2012 |
| ROUTE | 35/70 |
| STATE | MO |
| DISTRICT | KC |
| SHEET NO. | 42 |
| COUNTY | JACKSON |
| JOB NO. | J4I2371 |
| CONTRACT ID. | |
| PROJECT NO. | |
| BRIDGE NO. | L07816, L07817 |

| DATE | DESCRIPTION |
|---|---|
| | |

MISSOURI HIGHWAYS AND TRANSPORTATION COMMISSION
105 WEST CAPITOL
JEFFERSON CITY, MO 65102
1-888-ASK-MODOT (1-888-275-6636)

IF A SEAL IS PRESENT ON THIS SHEET IT HAS BEEN ELECTRONICALLY SEALED AND DATED.

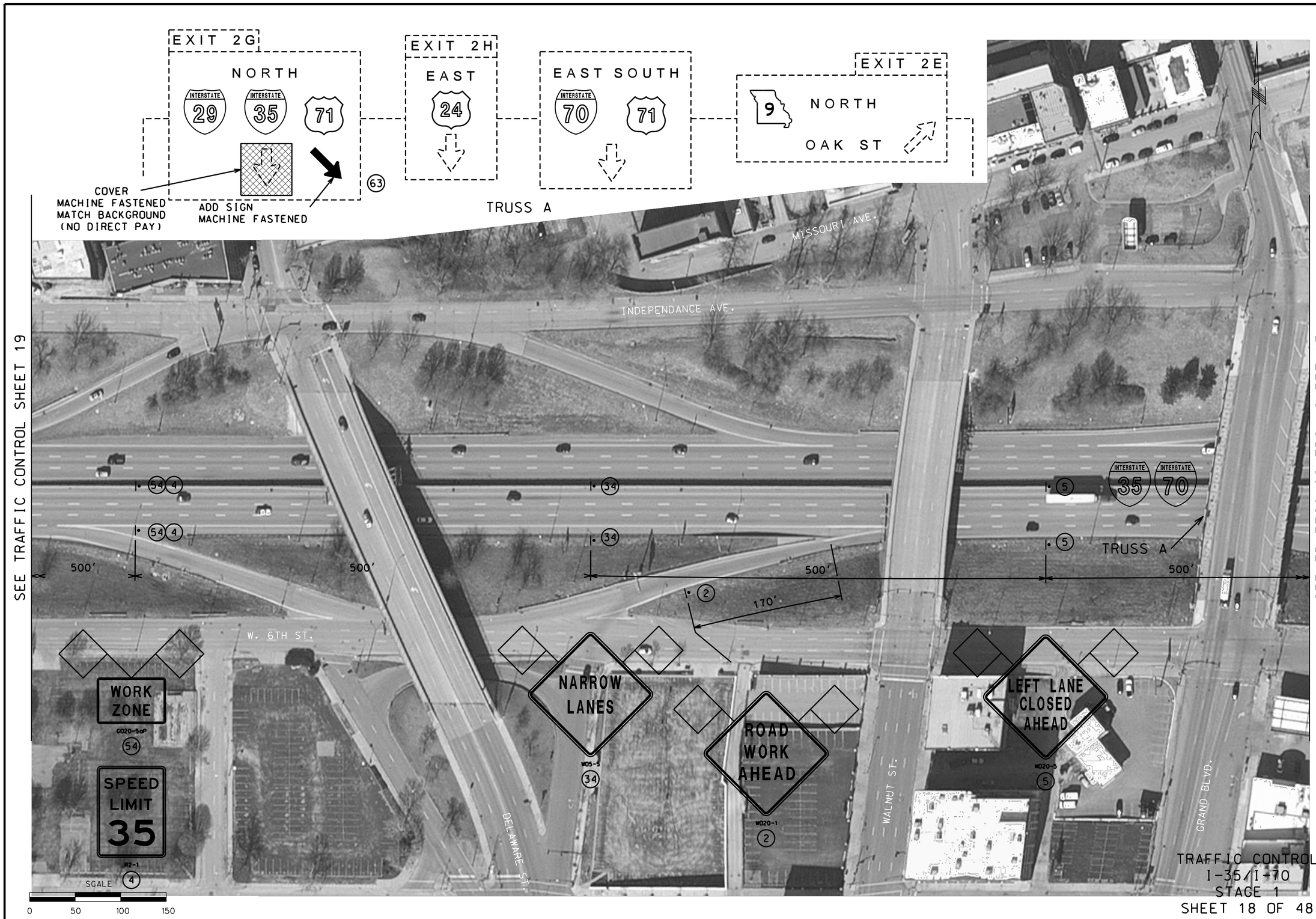


TRAFFIC CONTROL
I-35/I-70
STAGE 1
SHEET 18 OF 48

"THIS MEDIA SHOULD NOT BE CONSIDERED A CERTIFIED DOCUMENT."

| | |
|---|---|
| DATE PREPARED | 12/13/2012 |
| ROUTE | 35/70 |
| STATE | MO |
| DISTRICT | KC |
| SHEET NO. | 43 |
| COUNTY | JACKSON |
| JOB NO. | J4I2371 |
| CONTRACT ID. | |
| PROJECT NO. | |
| BRIDGE NO. | L07816, L07817 |

| DATE | DESCRIPTION |
|---|---|
| | |

MISSOURI HIGHWAYS AND TRANSPORTATION COMMISSION

105 WEST CAPITOL
JEFFERSON CITY, MO 65102
1-888-ASK-MODOT (1-888-275-6636)

IF A SEAL IS PRESENT ON THIS SHEET IT HAS BEEN ELECTRONICALLY SEALED AND DATED.

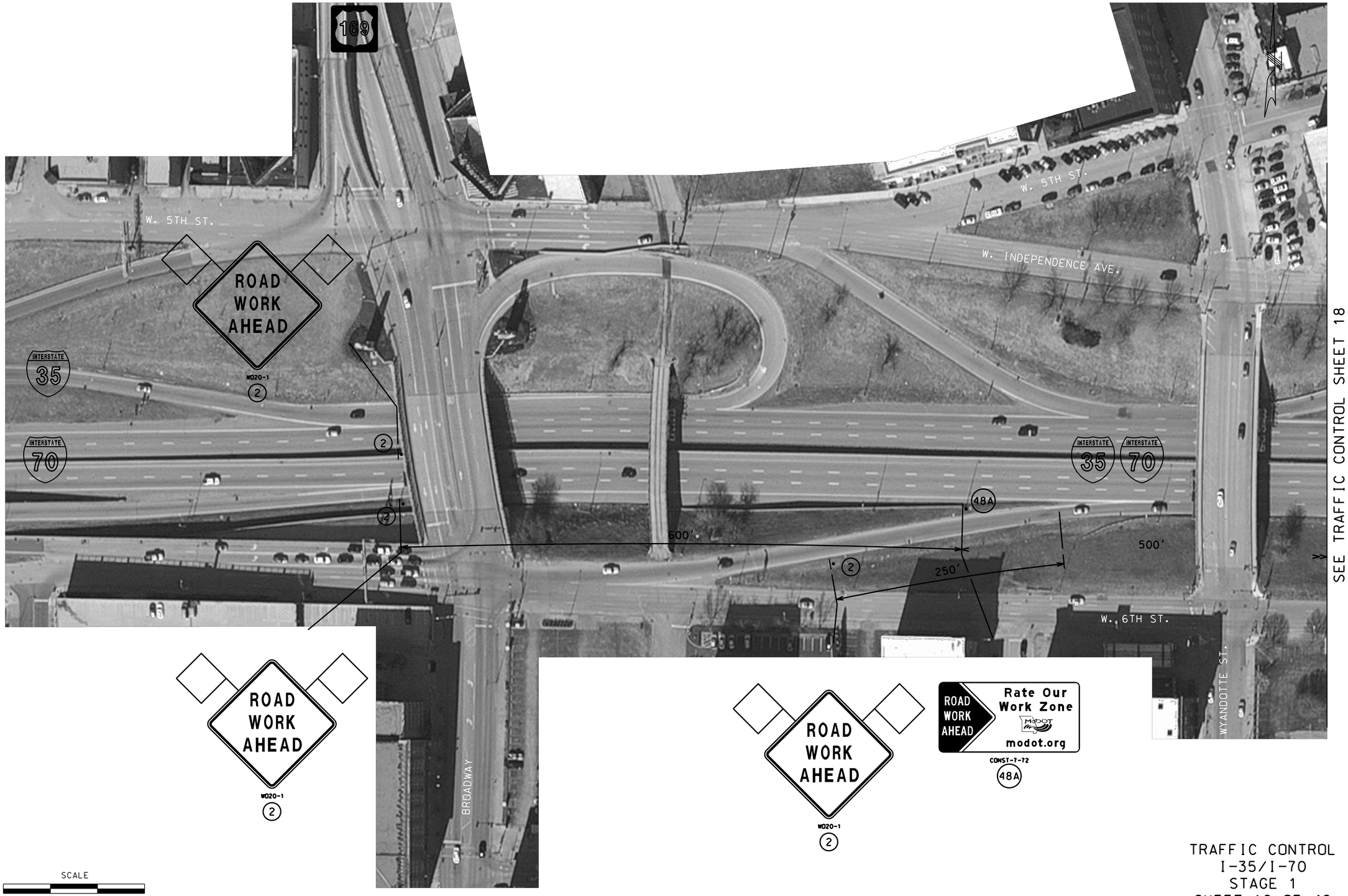


SEE TRAFFIC CONTROL SHEET 18

SCALE

0 50 100 150

TRAFFIC CONTROL
I-35/I-70
STAGE 1
SHEET 19 OF 48

"THIS MEDIA SHOULD NOT BE CONSIDERED A CERTIFIED DOCUMENT."

| | |
|---|---|
| DATE PREPARED | 12/13/2012 |
| ROUTE | 35/70 |
| STATE | MO |
| DISTRICT | KC |
| SHEET NO. | 44 |
| COUNTY | JACKSON |
| JOB NO. | J4I2371 |
| CONTRACT ID. | |
| PROJECT NO. | |
| BRIDGE NO. | L07816, L07817 |

| DATE | DESCRIPTION |
|---|---|
| | |

MISSOURI HIGHWAYS AND TRANSPORTATION COMMISSION

105 WEST CAPITOL
JEFFERSON CITY, MO 65102
1-888-ASK-MODOT (1-888-275-6636)

IF A SEAL IS PRESENT ON THIS SHEET IT HAS BEEN ELECTRONICALLY SEALED AND DATED.

DISCLAIMER
THE PROFESSIONAL WHOSE SIGNATURE AND PERSONAL SEAL APPEAR HEREON ASSUMES RESPONSIBILITY ONLY FOR WHAT APPEARS ON THIS PAGE, AND DISCLAIMS (PURSUANT TO SECTION 327.411 RSMO) SPECIFICATION, ESTIMATES, REPORTS, OR OTHER DOCUMENTS OR INSTRUMENTS NOT SEALED BY THE UNDERSIGNED PROFESSIONAL RELATING TO OR INTENDED TO BE USED FOR ANY PART OR PARTS OF THE PROJECT TO WHICH THIS PAGE REFERS.

NOTES:
S.C. - FULL DEPTH VERTICAL SAWCUT
C&G - CURB & GUTTER
SHLD. - SHOULDER

OPTIONAL PAVEMENT (TEMPORARY) FOR DETOUR
-LEFT IN PLACE AS SHOULDER
-SEE TYPICAL SECTIONS FOR DETAILS

ANY WORK INDICATED ON THE PLANS THAT EXTENDS BEYOND THE PROJECT LIMITS IS CONSIDERED INCIDENTAL TO AND A PART OF THE CONSTRUCTION OF THIS PROJECT.

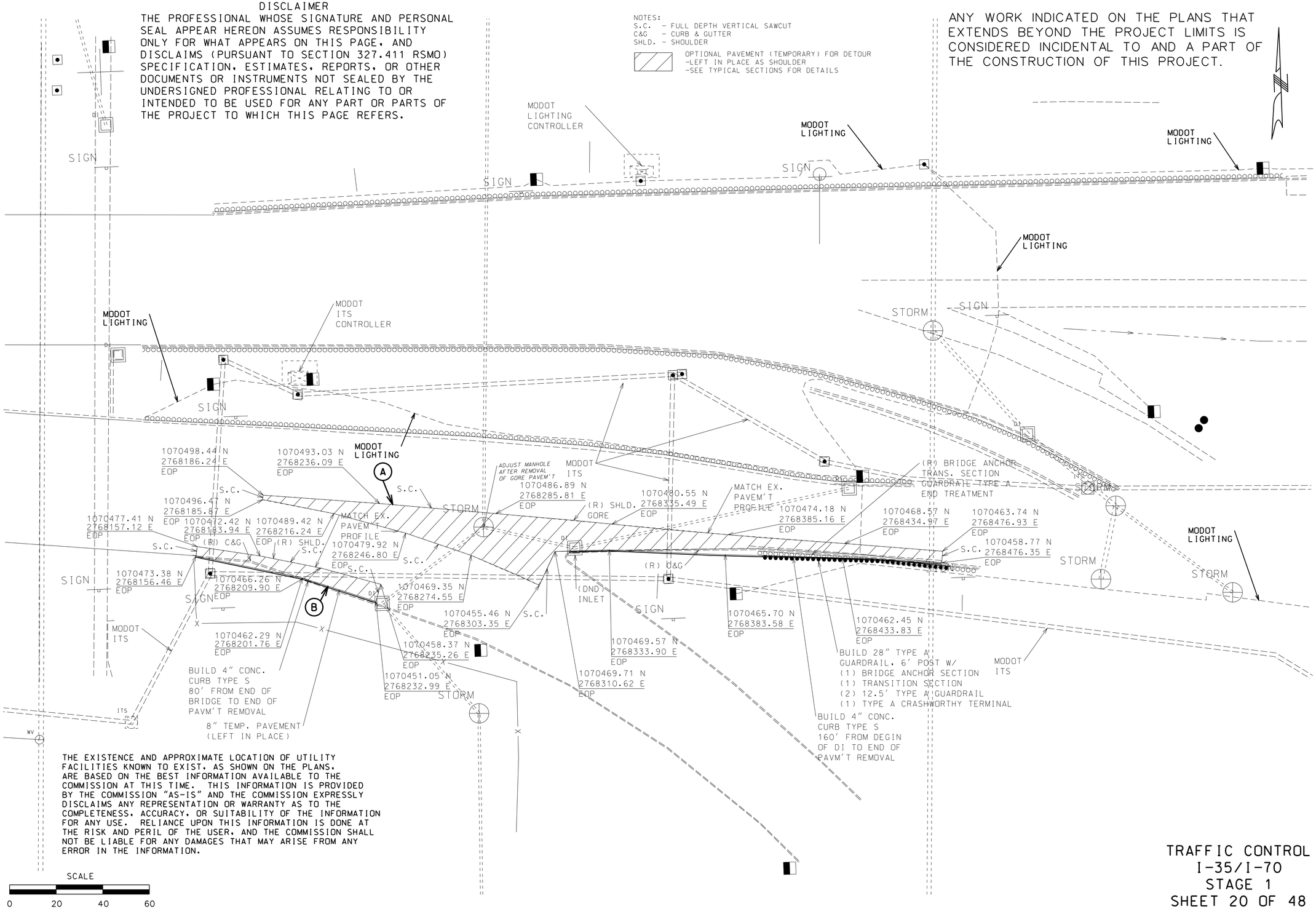


THE EXISTENCE AND APPROXIMATE LOCATION OF UTILITY FACILITIES KNOWN TO EXIST, AS SHOWN ON THE PLANS, ARE BASED ON THE BEST INFORMATION AVAILABLE TO THE COMMISSION AT THIS TIME. THIS INFORMATION IS PROVIDED BY THE COMMISSION "AS-IS" AND THE COMMISSION EXPRESSLY DISCLAIMS ANY REPRESENTATION OR WARRANTY AS TO THE COMPLETENESS, ACCURACY, OR SUITABILITY OF THE INFORMATION FOR ANY USE. RELIANCE UPON THIS INFORMATION IS DONE AT THE RISK AND PERIL OF THE USER, AND THE COMMISSION SHALL NOT BE LIABLE FOR ANY DAMAGES THAT MAY ARISE FROM ANY ERROR IN THE INFORMATION.

SCALE
0 20 40 60

TRAFFIC CONTROL
I-35/I-70
STAGE 1
SHEET 20 OF 48

"THIS MEDIA SHOULD NOT BE CONSIDERED A CERTIFIED DOCUMENT."

| DATE PREPARED | |
|---|---|
| 12/13/2012 | |
| ROUTE 35/70 | STATE MO |
| DISTRICT KC | SHEET NO. 45 |
| COUNTY JACKSON | |
| JOB NO. J4I2371 | |
| CONTRACT ID. | |
| PROJECT NO. | |
| BRIDGE NO. | |

| DATE | DESCRIPTION |
|---|---|
| | |

MISSOURI HIGHWAYS AND TRANSPORTATION COMMISSION
105 WEST CAPITOL
JEFFERSON CITY, MO 65102
1-888-ASK-MODOT (1-888-275-6636)

IF A SEAL IS PRESENT ON THIS SHEET IT HAS BEEN ELECTRONICALLY SEALED AND DATED.

SEE TRAFFIC CONTROL SHEET 22

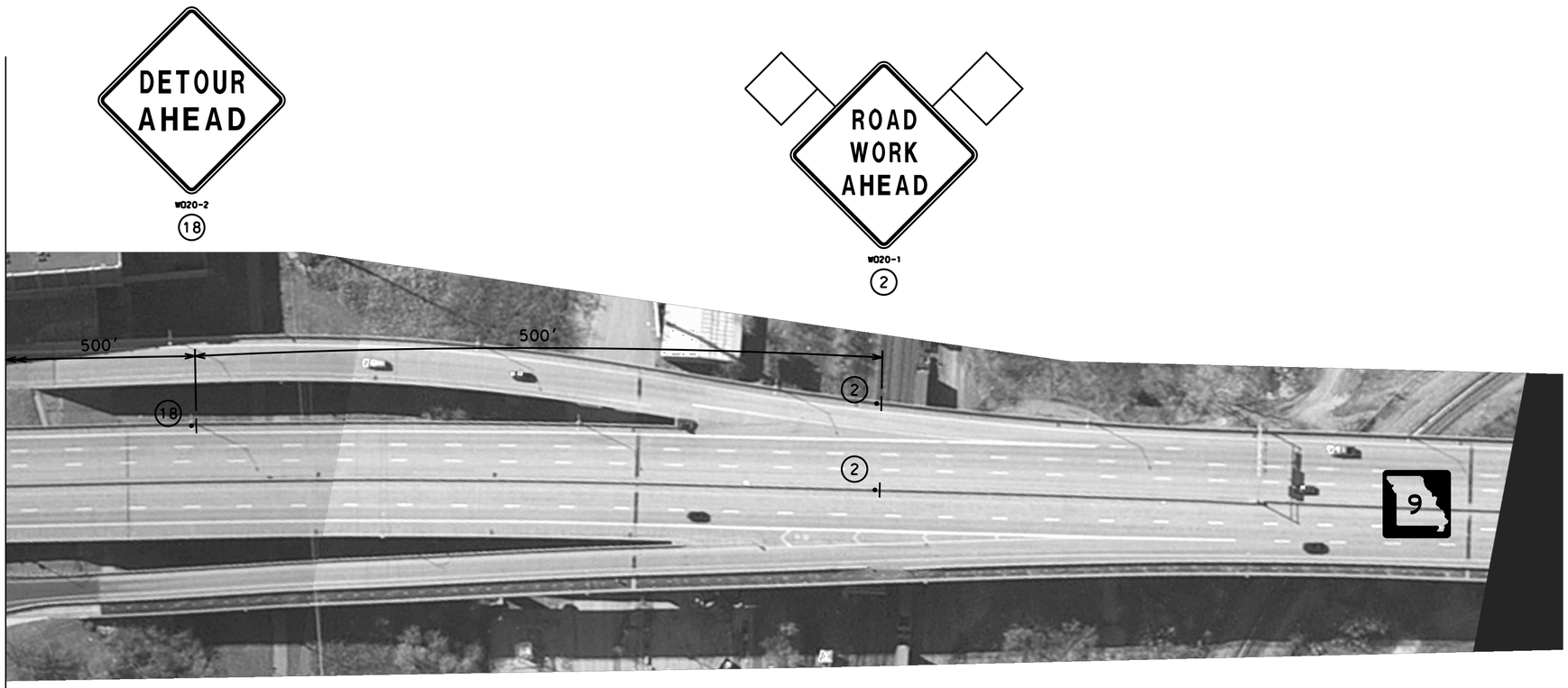


SCALE

0 50 100 150

TRAFFIC CONTROL
I-35/I-70
STAGE 1 DETOUR "A"
SHEET 21 OF 48

"THIS MEDIA SHOULD NOT BE CONSIDERED A CERTIFIED DOCUMENT."

| | |
|---|---|
| DATE PREPARED | 12/13/2012 |
| ROUTE | 35/70 |
| STATE | MO |
| DISTRICT | KC |
| SHEET NO. | 46 |
| COUNTY | JACKSON |
| JOB NO. | J4I2371 |
| CONTRACT ID. | |
| PROJECT NO. | |
| BRIDGE NO. | L07816, L07817 |

| DESCRIPTION | DATE |
|---|---|
| | |

MISSOURI HIGHWAYS AND TRANSPORTATION COMMISSION

105 WEST CAPITOL
JEFFERSON CITY, MO 65102
1-888-ASK-MODOT (1-888-275-6636)

IF A SEAL IS PRESENT ON THIS SHEET IT HAS BEEN ELECTRONICALLY SEALED AND DATED.

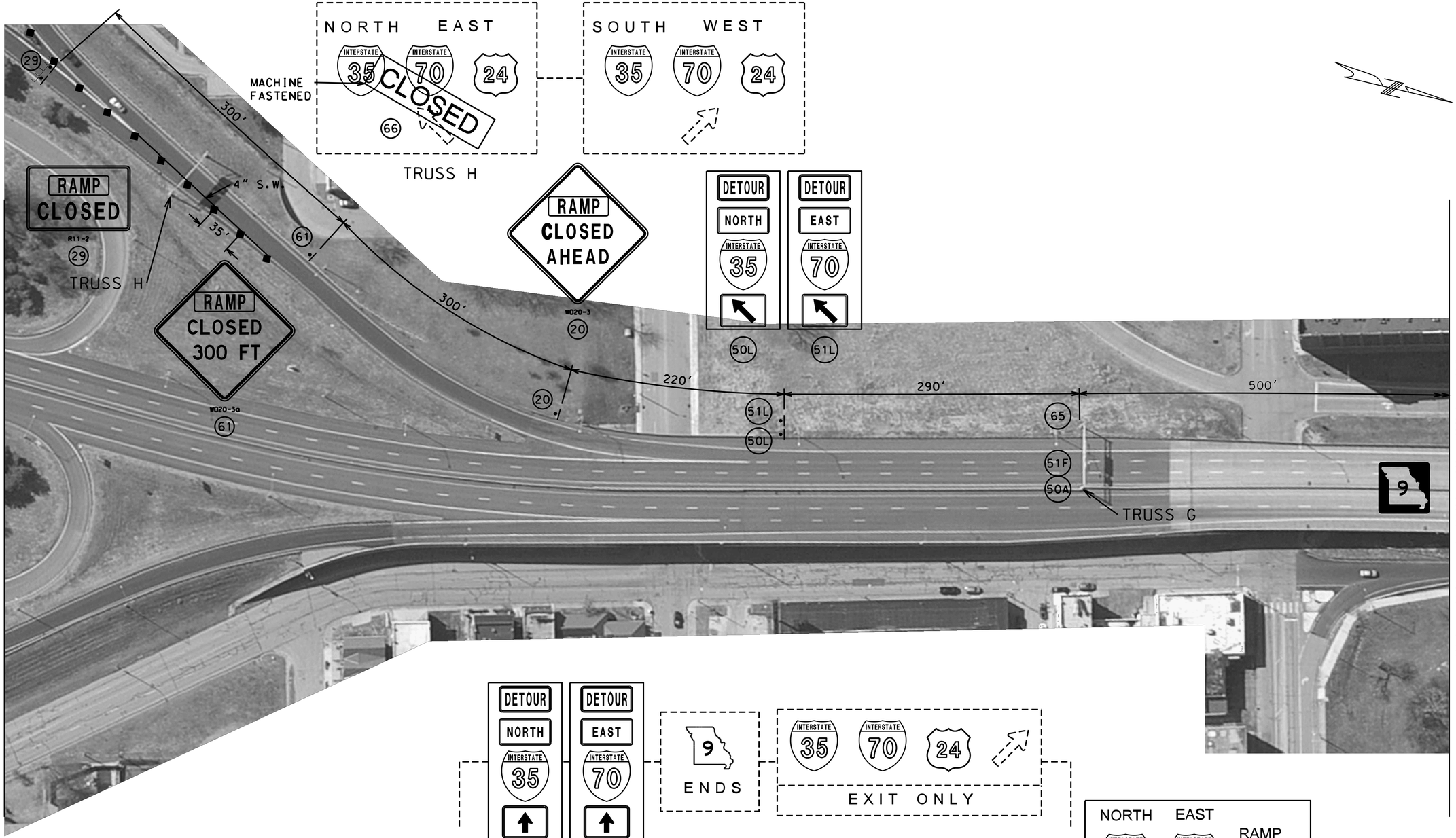


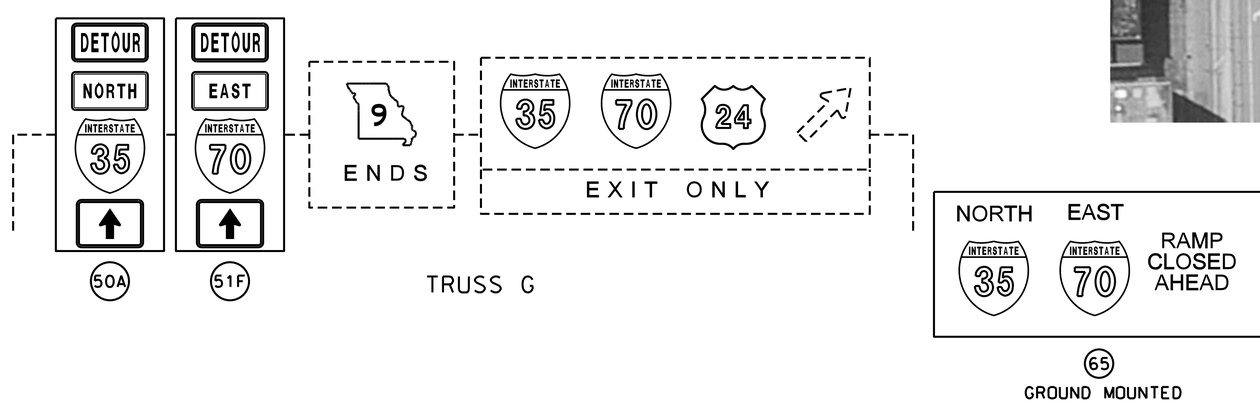


SCALE

0 50 100 150

TRAFFIC CONTROL
I-35/I-70
STAGE 1 DETOUR "A"
SHEET 22 OF 48

"THIS MEDIA SHOULD NOT BE CONSIDERED A CERTIFIED DOCUMENT."

| | |
|---|---|
| DATE PREPARED | 12/13/2012 |
| ROUTE | 35/70 |
| STATE | MO |
| DISTRICT | KC |
| SHEET NO. | 47 |
| COUNTY | JACKSON |
| JOB NO. | J4I2371 |
| CONTRACT ID. | |
| PROJECT NO. | |
| BRIDGE NO. | L07816, L07817 |

| DATE | DESCRIPTION |
|---|---|
| | |

MISSOURI HIGHWAYS AND TRANSPORTATION COMMISSION
105 WEST CAPITOL
JEFFERSON CITY, MO 65102
1-888-ASK-MODOT (1-888-275-6636)

IF A SEAL IS PRESENT ON THIS SHEET IT HAS BEEN ELECTRONICALLY SEALED AND DATED.

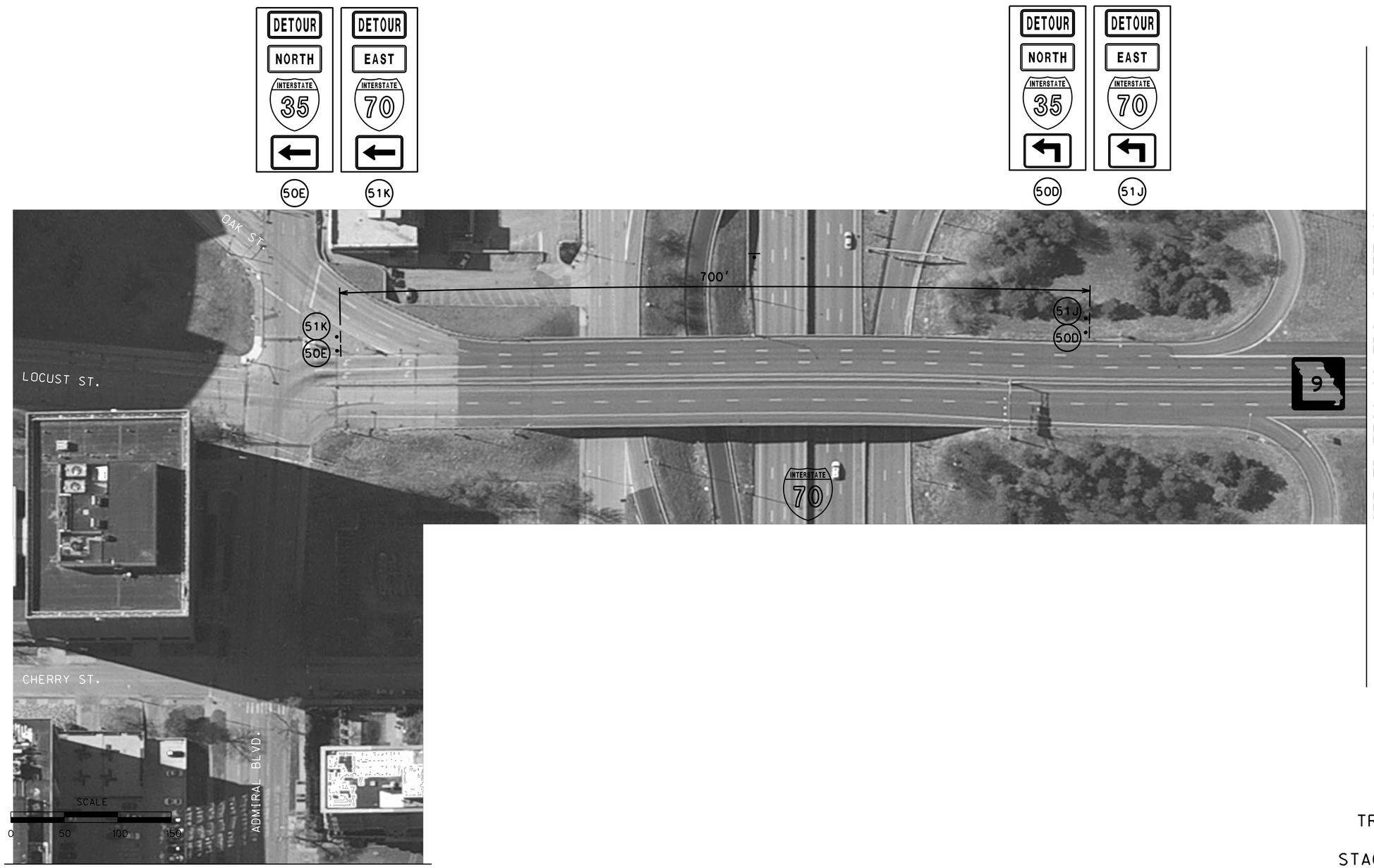


SEE TRAFFIC CONTROL SHEET 22

SEE TRAFFIC CONTROL SHEET 24

TRAFFIC CONTROL
I-35/I-70
STAGE 1 DETOUR "A"
SHEET 23 OF 48

"THIS MEDIA SHOULD NOT BE CONSIDERED A CERTIFIED DOCUMENT."

| | |
|---|---|
| DATE PREPARED | 12/13/2012 |
| ROUTE | 35/70 |
| STATE | MO |
| DISTRICT | KC |
| SHEET NO. | 48 |
| COUNTY | JACKSON |
| JOB NO. | J4I2371 |
| CONTRACT ID. | |
| PROJECT NO. | |
| BRIDGE NO. | L07816, L07817 |

| DATE | DESCRIPTION |
|---|---|
| | |

MISSOURI HIGHWAYS AND TRANSPORTATION COMMISSION

105 WEST CAPITOL
JEFFERSON CITY, MO 65102
1-888-ASK-MODOT (1-888-275-6636)

IF A SEAL IS PRESENT ON THIS SHEET IT HAS BEEN ELECTRONICALLY SEALED AND DATED.

SEE TRAFFIC CONTROL SHEET 25

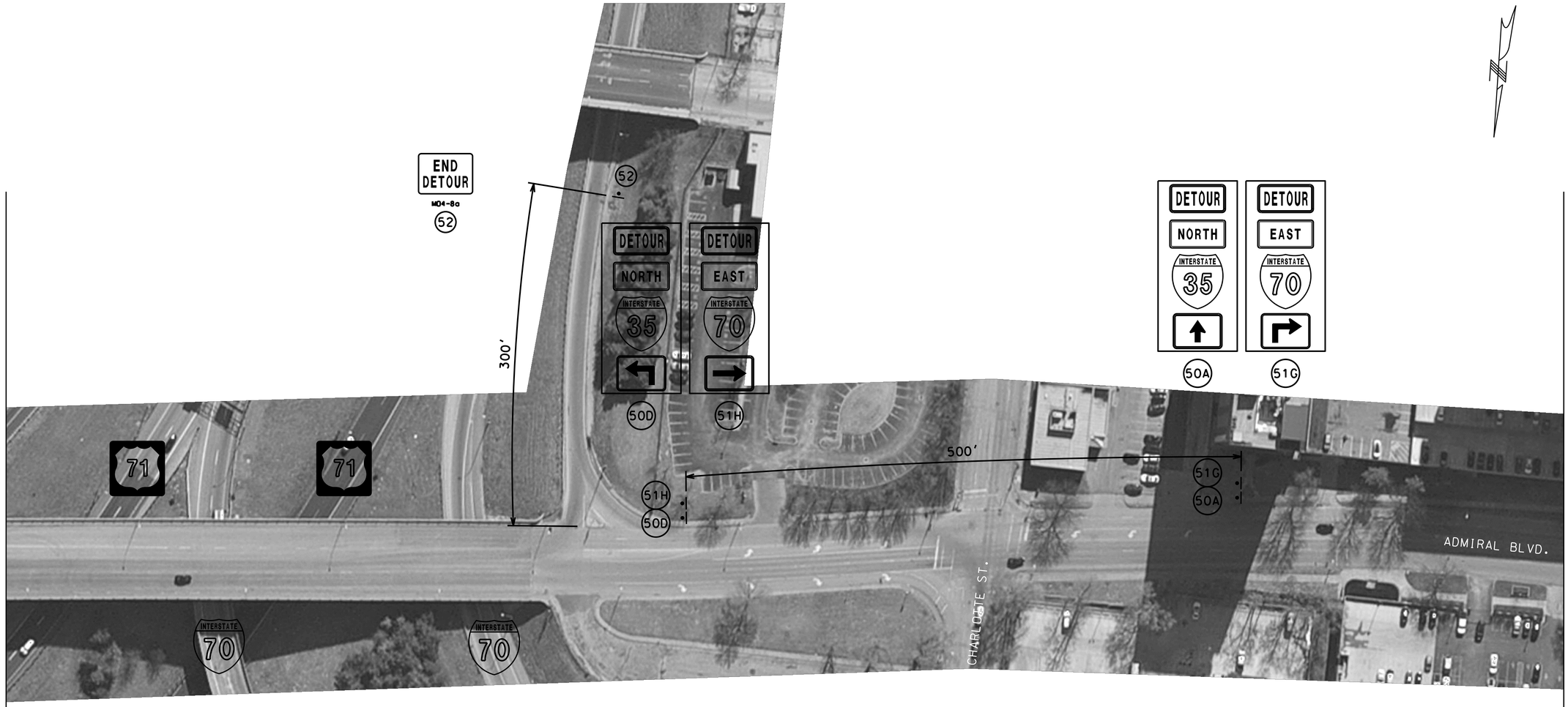


SEE TRAFFIC CONTROL SHEET 23

SCALE

0 50 100 150

TRAFFIC CONTROL
I-35/I-70
STAGE 1 DETOUR "A"
SHEET 24 OF 48

"THIS MEDIA SHOULD NOT BE CONSIDERED A CERTIFIED DOCUMENT."

| | |
|---|---|
| DATE PREPARED | 12/13/2012 |
| ROUTE | 35/70 |
| STATE | MO |
| DISTRICT | KC |
| SHEET NO. | 49 |
| COUNTY | JACKSON |
| JOB NO. | J4I2371 |
| CONTRACT ID. | |
| PROJECT NO. | |
| BRIDGE NO. | L07816, L07817 |

| DATE | DESCRIPTION |
|---|---|
| | |

MISSOURI HIGHWAYS AND TRANSPORTATION COMMISSION

105 WEST CAPITOL
JEFFERSON CITY, MO 65102
1-888-ASK-MODOT (1-888-275-6636)

IF A SEAL IS PRESENT ON THIS SHEET IT HAS BEEN ELECTRONICALLY SEALED AND DATED.

SEE TRAFFIC CONTROL SHEET 26

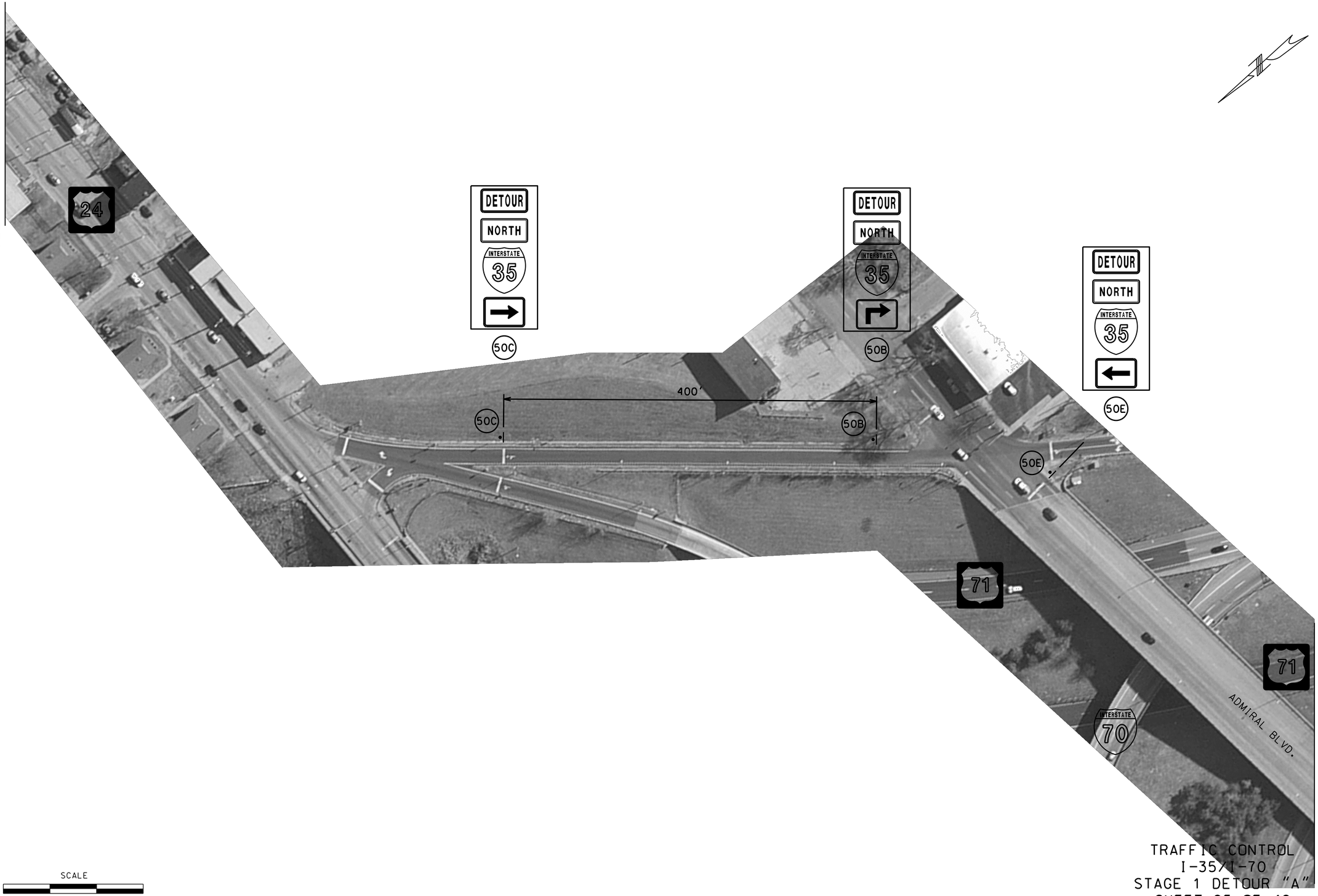


SCALE

0 50 100 150

TRAFFIC CONTROL
I-35/I-70
STAGE 1 DETOUR "A"
SHEET 25 OF 48

SEE TRAFFIC CONTROL SHEET 24

"THIS MEDIA SHOULD NOT BE CONSIDERED A CERTIFIED DOCUMENT."

| | |
|---|---|
| DATE PREPARED | 12/13/2012 |
| ROUTE | 35/70 |
| STATE | MO |
| DISTRICT | KC |
| SHEET NO. | 50 |
| COUNTY | JACKSON |
| JOB NO. | J4I2371 |
| CONTRACT ID. | |
| PROJECT NO. | |
| BRIDGE NO. | L07816, L07817 |

| DATE | DESCRIPTION |
|---|---|
| | |

MISSOURI HIGHWAYS AND TRANSPORTATION COMMISSION

105 WEST CAPITOL
JEFFERSON CITY, MO 65102
1-888-ASK-MODOT (1-888-275-6636)

IF A SEAL IS PRESENT ON THIS SHEET IT HAS BEEN ELECTRONICALLY SEALED AND DATED.

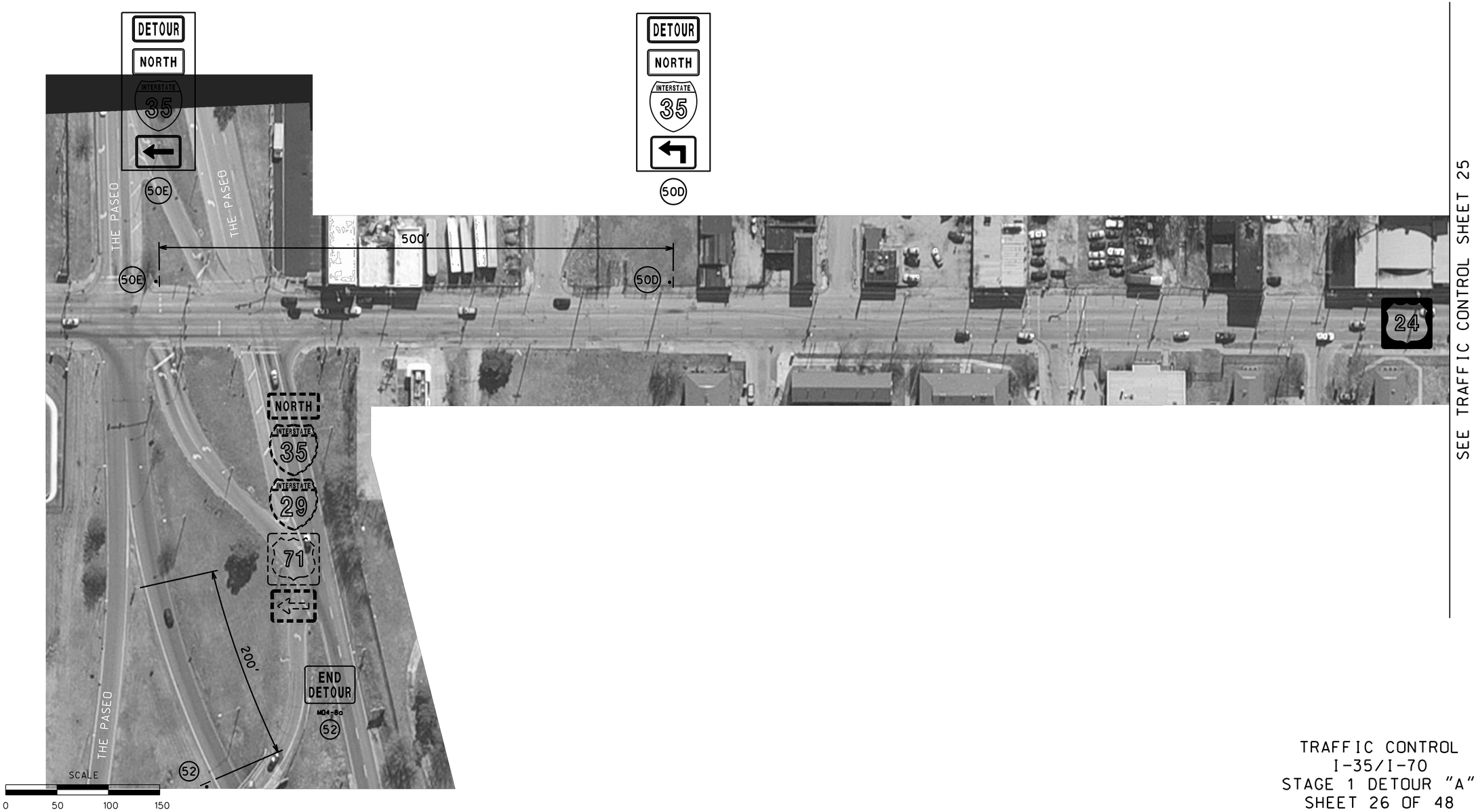


SEE TRAFFIC CONTROL SHEET 25

TRAFFIC CONTROL
I-35/I-70
STAGE 1 DETOUR "A"
SHEET 26 OF 48

"THIS MEDIA SHOULD NOT BE CONSIDERED A CERTIFIED DOCUMENT."

| | |
|---|---|
| DATE PREPARED | 12/13/2012 |
| ROUTE | 35/70 |
| STATE | MO |
| DISTRICT | KC |
| SHEET NO. | 51 |
| COUNTY | JACKSON |
| JOB NO. | J4I2371 |
| CONTRACT ID. | |
| PROJECT NO. | |
| BRIDGE NO. | L07816, L07817 |

| DATE | DESCRIPTION |
|---|---|
| | |

MISSOURI HIGHWAYS AND TRANSPORTATION COMMISSION

105 WEST CAPITOL
JEFFERSON CITY, MO 65102
1-888-ASK-MODOT (1-888-275-6636)

IF A SEAL IS PRESENT ON THIS SHEET IT HAS BEEN ELECTRONICALLY SEALED AND DATED.

## TRAFFIC CONTROL LEGEND

- SIGN (SINGLE SIDED)
- SIGN (DOUBLE SIDED)
- FLAGGER
- CONE
- CHANNELIZER
- BARRICADE
- FLASHING ARROW PANEL
- CHANGEABLE MESSAGE BOARD

- S.W.T. — SOLID WHITE PREFORMED REMOVABLE PAVEMENT MARKING TAPE
- S.Y.T. — SOLID YELLOW PREFORMED REMOVABLE PAVEMENT MARKING TAPE
- D.W.T. — DOTTED WHITE PREFORMED REMOVABLE PAVEMENT MARKING TAPE (3' STRIPE X 9' GAP)
- (S-#) — SAND FILLED IMPACT ATTENUATOR

## GENERAL NOTES:

- SEE STANDARD PLAN 616.10 FOR DETAILS AND ITEMS NOT SHOWN
- EXISTING SIGNS SHALL BE COVERED DURING WORKING HOURS ONLY IF IN CONFLICT WITH TRAFFIC CONTROL PLANS.
- NO DIRECT PAYMENT WILL BE MADE FOR RELOCATING, COVERING, UNCOVERING OR REMOVING SIGNS.
- LOCATE FLASHING ARROW PANEL AT BEGINNING OF TAPER WHEN FEASIBLE, ARROW PANELS ARE ALWAYS LOCATED BEHIND CHANNELIZERS OR CONES.
- REMOVE AND/OR MODIFY ANY EXISTING PAVEMENT MARKING AS NEEDED.
- FIRST MAINLINE TAPER SHALL USE SEQUENTIAL FLASHING WARNING LIGHTS.

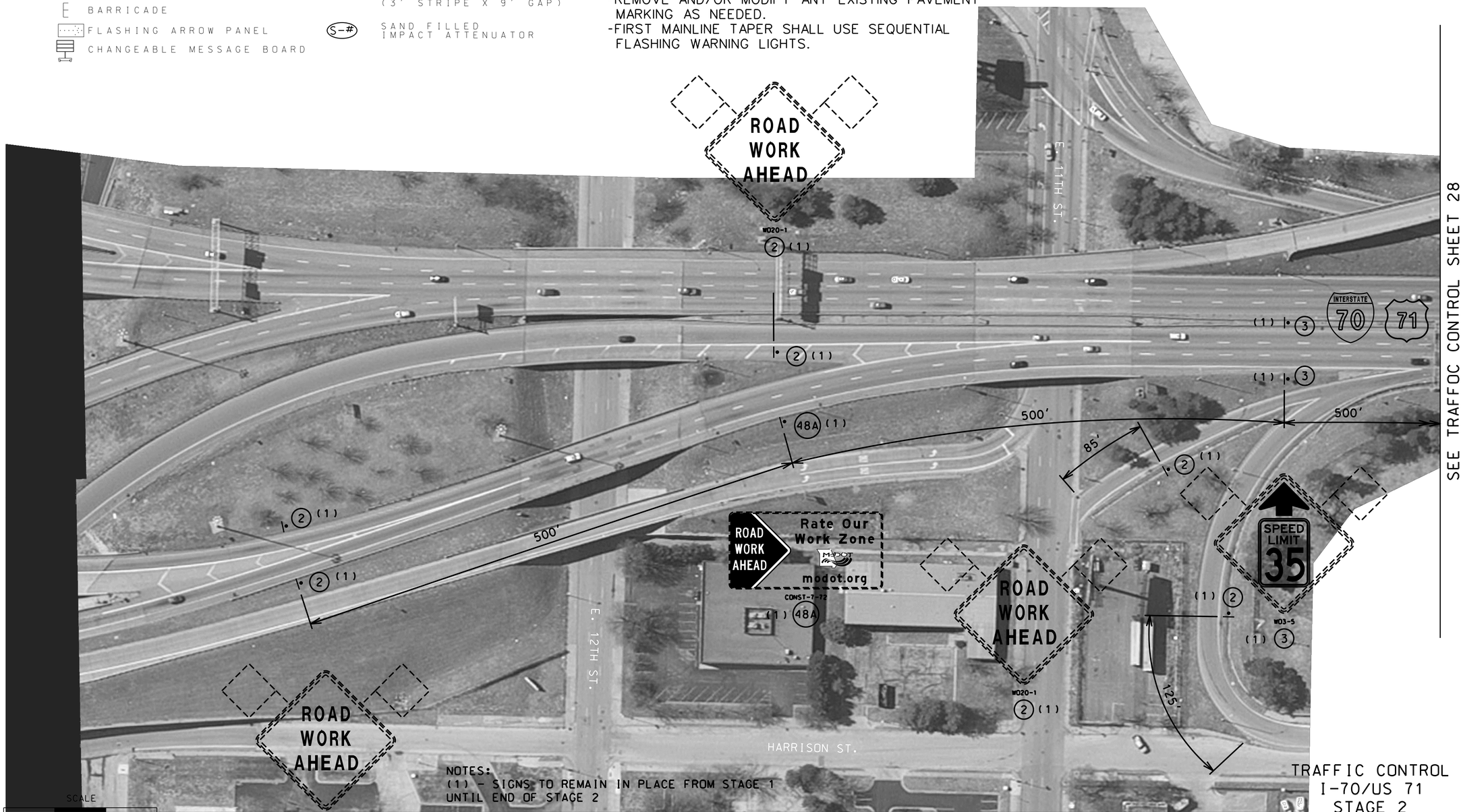


NOTES:
(1) - SIGNS TO REMAIN IN PLACE FROM STAGE 1 UNTIL END OF STAGE 2

SEE TRAFFOC CONTROL SHEET 28

TRAFFIC CONTROL
I-70/US 71
STAGE 2
SHEET 27 OF 48

"THIS MEDIA SHOULD NOT BE CONSIDERED A CERTIFIED DOCUMENT."

| DATE PREPARED | |
|---|---|
| 12/13/2012 | |
| ROUTE 70/35 | STATE MO |
| DISTRICT KC | SHEET NO. 52 |
| COUNTY JACKSON | |
| JOB NO. J4I2371 | |
| CONTRACT ID. | |
| PROJECT NO. | |
| BRIDGE NO. L07816, L07817 | |

| DATE | DESCRIPTION |
|---|---|
| | |

MISSOURI HIGHWAYS AND TRANSPORTATION COMMISSION
105 WEST CAPITOL
JEFFERSON CITY, MO 65102
1-888-ASK-MODOT (1-888-275-6636)

IF A SEAL IS PRESENT ON THIS SHEET IT HAS BEEN ELECTRONICALLY SEALED AND DATED.

SEE TRAFFC CONTROL SHEET 27

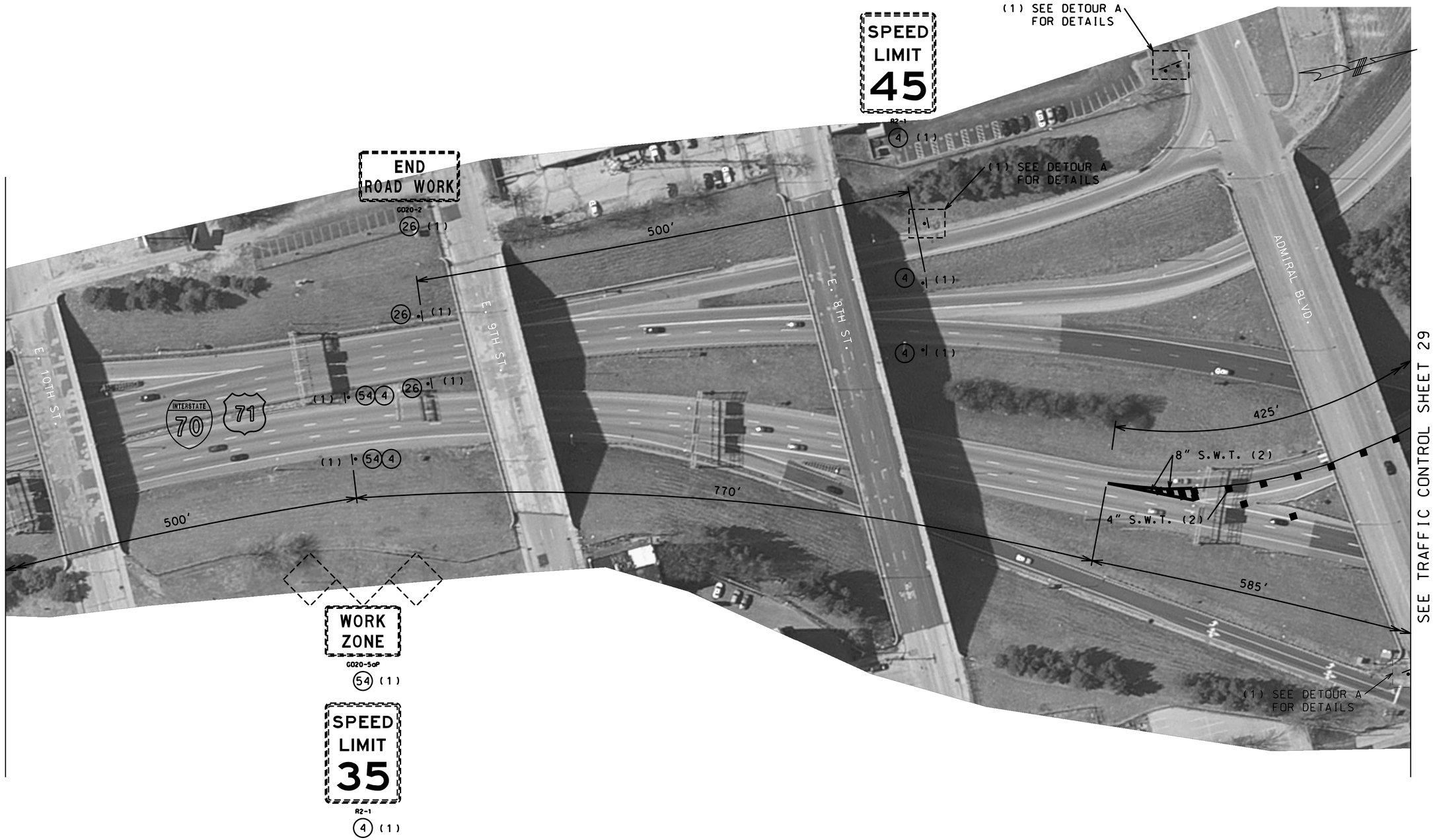


SEE TRAFFIC CONTROL SHEET 29

NOTES:
(1) - SIGNS TO REMAIN IN PLACE FROM STAGE 1 UNTIL END OF STAGE 2
(2) - TAPE TO REMAIN IN PLACE FROM STAGE 1 UNTIL END OF STAGE 2

SCALE
0 50 100 150

TRAFFIC CONTROL
I-70/US 71
STAGE 2
SHEET 28 OF 48

"THIS MEDIA SHOULD NOT BE CONSIDERED A CERTIFIED DOCUMENT."

| DATE PREPARED | |
|---|---|
| 12/13/2012 | |
| ROUTE 70/35 | STATE MO |
| DISTRICT KC | SHEET NO. 53 |
| COUNTY JACKSON | |
| JOB NO. J4I2371 | |
| CONTRACT ID. | |
| PROJECT NO. | |
| BRIDGE NO. | |

| DATE | DESCRIPTION |
|---|---|
| | |

MISSOURI HIGHWAYS AND TRANSPORTATION COMMISSION
105 WEST CAPITOL
JEFFERSON CITY, MO 65102
1-888-ASK-MODOT (1-888-275-6636)

IF A SEAL IS PRESENT ON THIS SHEET IT HAS BEEN ELECTRONICALLY SEALED AND DATED.

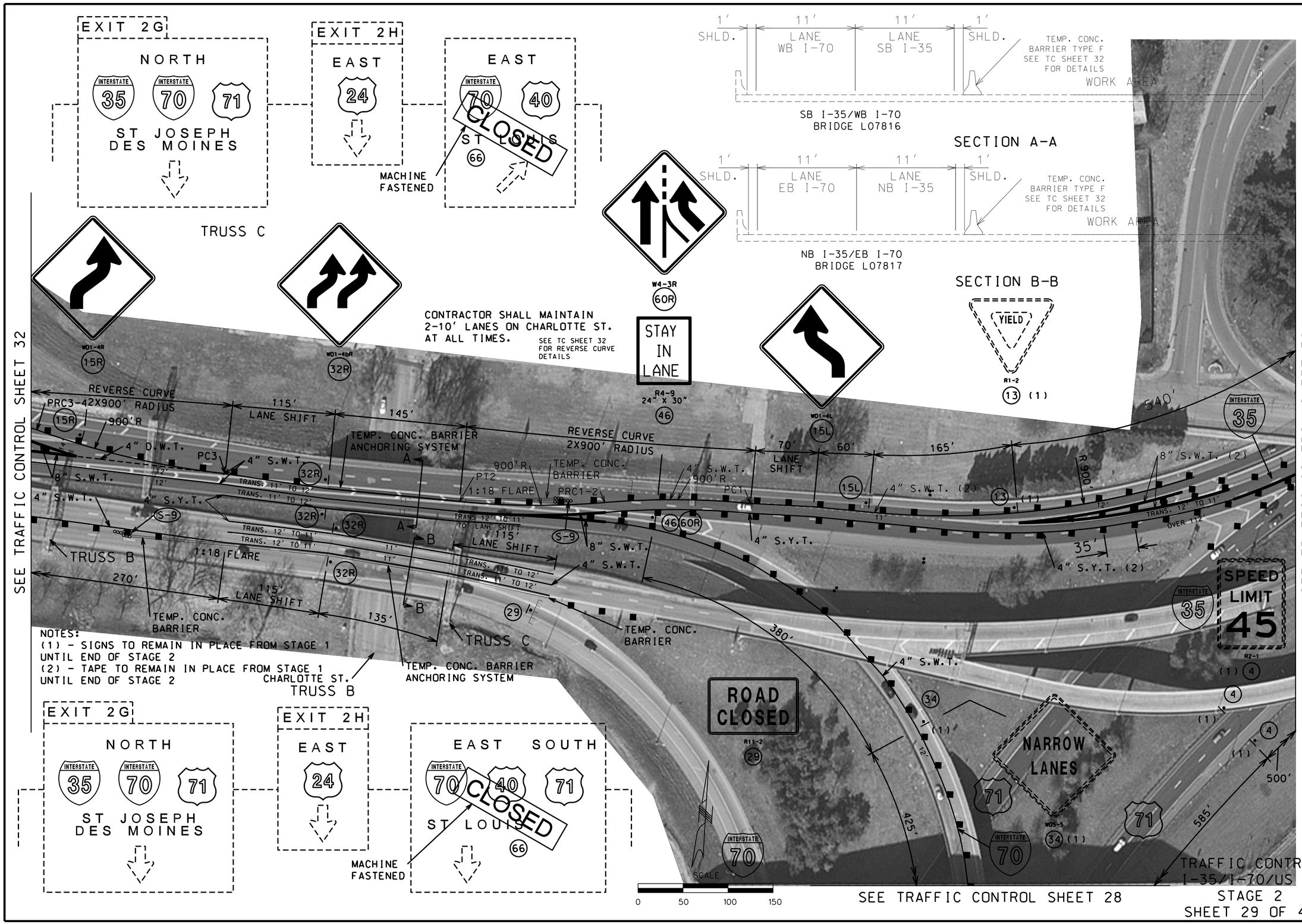


NOTES:
(1) - SIGNS TO REMAIN IN PLACE FROM STAGE 1 UNTIL END OF STAGE 2
(2) - TAPE TO REMAIN IN PLACE FROM STAGE 1 UNTIL END OF STAGE 2

SEE TRAFFIC CONTROL SHEET 28

TRAFFIC CONTROL
I-35/I-70/US 71
STAGE 2
SHEET 29 OF 48

"THIS MEDIA SHOULD NOT BE CONSIDERED A CERTIFIED DOCUMENT."

| | |
|---|---|
| DATE PREPARED | 12/13/2012 |
| ROUTE | 70/35 |
| STATE | MO |
| DISTRICT | KC |
| SHEET NO. | 54 |
| COUNTY | JACKSON |
| JOB NO. | J4I2371 |
| CONTRACT ID. | |
| PROJECT NO. | |
| BRIDGE NO. | L07816, L07817 |

| DATE | DESCRIPTION |
|---|---|
| | |

MISSOURI HIGHWAYS AND TRANSPORTATION COMMISSION
105 WEST CAPITOL
JEFFERSON CITY, MO 65102
1-888-ASK-MODOT (1-888-275-6636)

IF A SEAL IS PRESENT ON THIS SHEET IT HAS BEEN ELECTRONICALLY SEALED AND DATED.

NOTES:
(1) - SIGNS TO REMAIN IN PLACE FROM STAGE 1 UNTIL END OF STAGE 2
(2) - TAPE TO REMAIN IN PLACE FROM STAGE 1 UNTIL END OF STAGE 2

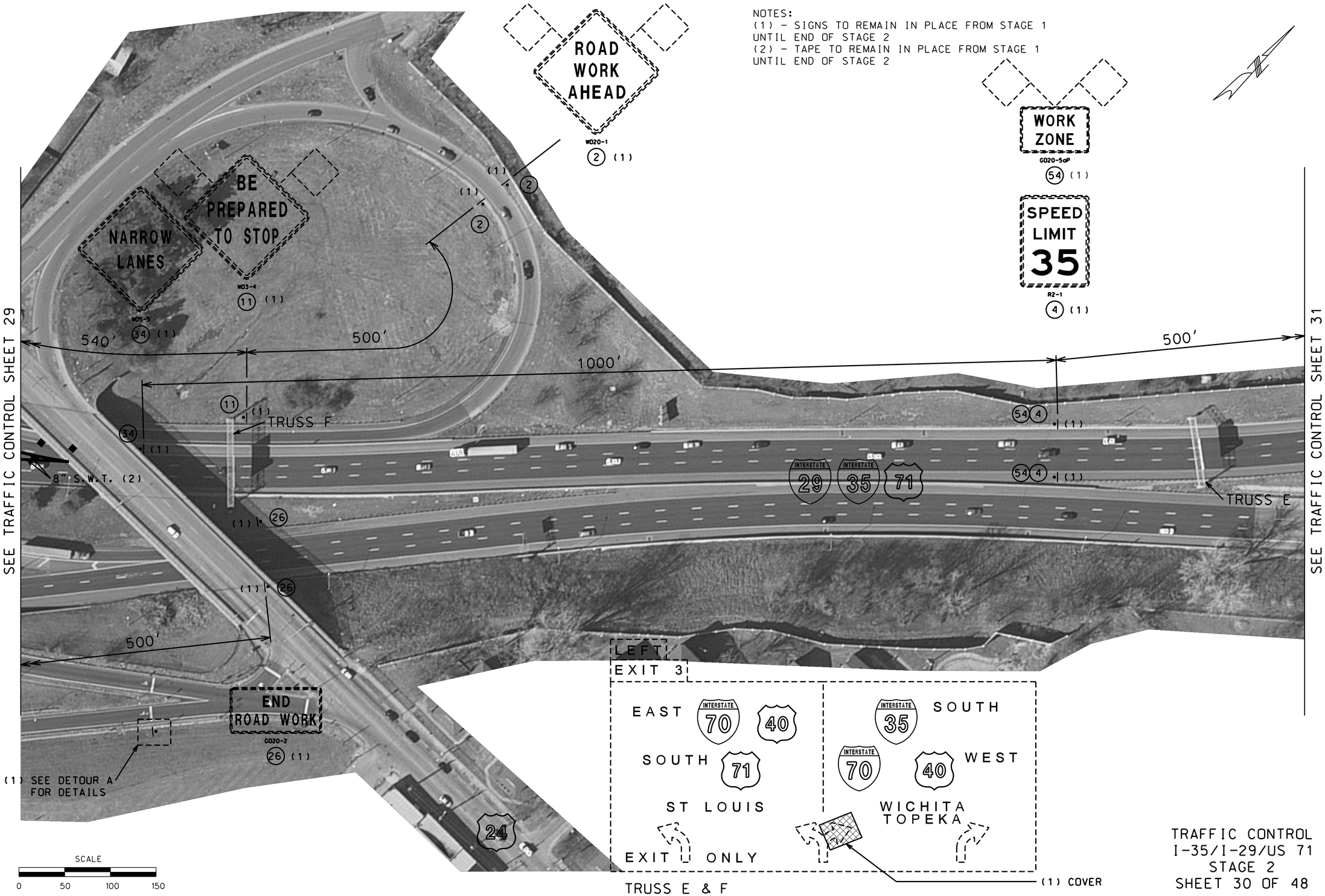


TRAFFIC CONTROL
I-35/I-29/US 71
STAGE 2
SHEET 30 OF 48

"THIS MEDIA SHOULD NOT BE CONSIDERED A CERTIFIED DOCUMENT."

| | |
|---|---|
| DATE PREPARED | 12/13/2012 |
| ROUTE | 70/35 |
| STATE | MO |
| DISTRICT | KC |
| SHEET NO. | 55 |
| COUNTY | JACKSON |
| JOB NO. | J4I2371 |
| CONTRACT ID. | |
| PROJECT NO. | |
| BRIDGE NO. | L07816, L07817 |

| DATE | DESCRIPTION |
|---|---|
| | |

MISSOURI HIGHWAYS AND TRANSPORTATION COMMISSION
105 WEST CAPITOL
JEFFERSON CITY, MO 65102
1-888-ASK-MODOT (1-888-275-6636)

IF A SEAL IS PRESENT ON THIS SHEET IT HAS BEEN ELECTRONICALLY SEALED AND DATED.

NOTES:
(1) - SIGNS TO REMAIN IN PLACE FROM STAGE 1
UNTIL END OF STAGE 2

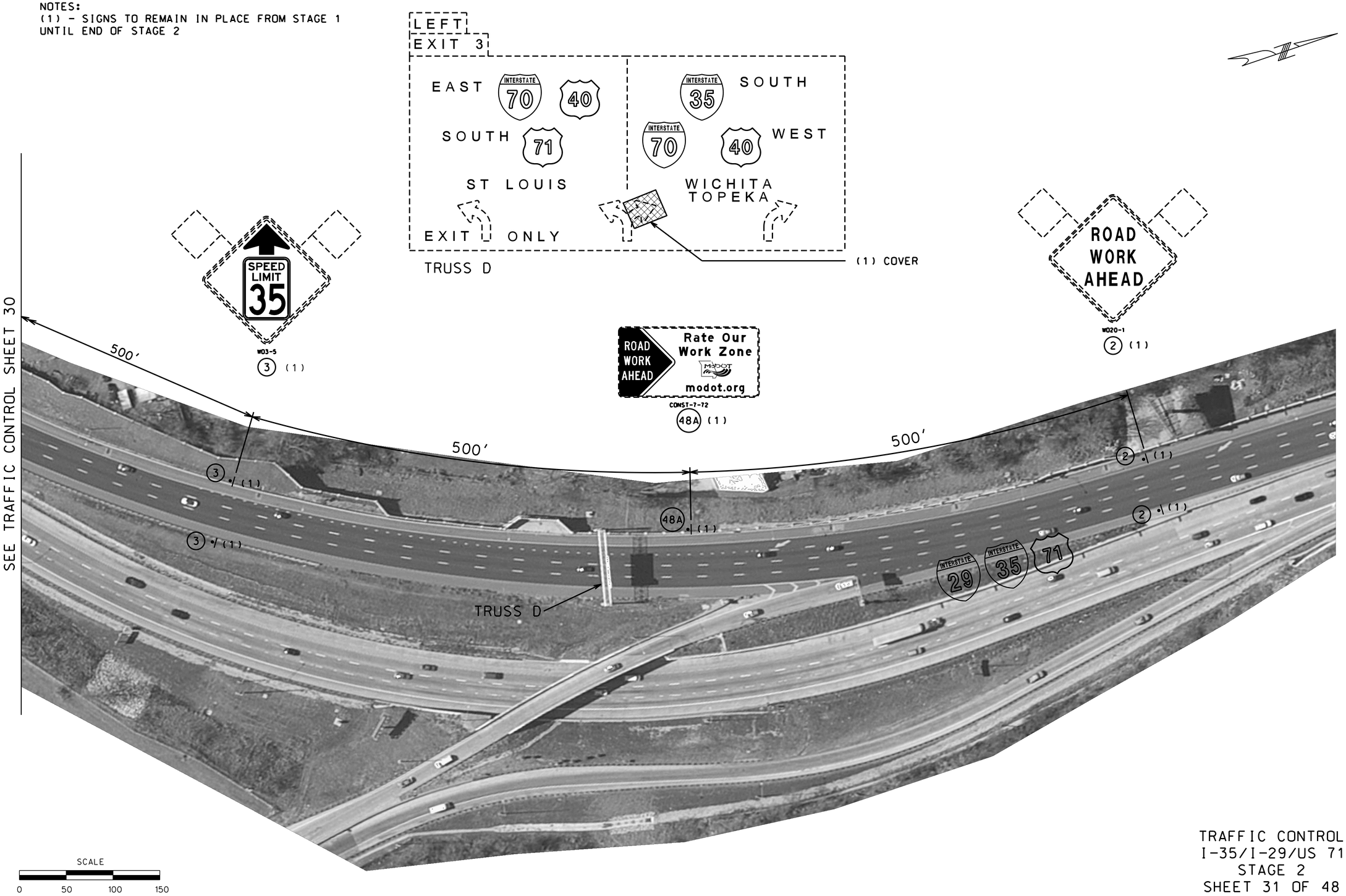


TRAFFIC CONTROL
I-35/I-29/US 71
STAGE 2
SHEET 31 OF 48

"THIS MEDIA SHOULD NOT BE CONSIDERED A CERTIFIED DOCUMENT."

| | |
|---|---|
| DATE PREPARED | 12/13/2012 |
| ROUTE | 70/35 |
| STATE | MO |
| DISTRICT | KC |
| SHEET NO. | 56 |
| COUNTY | JACKSON |
| JOB NO. | J4I2371 |
| CONTRACT ID. | |
| PROJECT NO. | |
| BRIDGE NO. | L07816, L07817 |

DESCRIPTION | DATE

MISSOURI HIGHWAYS AND TRANSPORTATION COMMISSION
105 WEST CAPITOL
JEFFERSON CITY, MO 65102
1-888-ASK-MODOT (1-888-275-6636)

IF A SEAL IS PRESENT ON THIS SHEET IT HAS BEEN ELECTRONICALLY SEALED AND DATED.

| STAGE 2 REVERSE CURVES | | | |
|---|---|---|---|
| POINTS | NORTHING | EASTING | REMARKS |
| PC1 | 1070603.826 | 2768490.044 | |
| PI1 | 1069704.425 | 2768457.196 | RADIUS 900′ |
| PRC1-2 | 1070595.208 | 2768328.719 | |
| PI2 | 1071485.991 | 2768200.242 | RADIUS 900′ |
| PT2 | 1070586.59 | 2768167.394 | |
| PC3 | 1070602.053 | 2767905.789 | |
| PI3 | 1071500.963 | 2767973.972 | RADIUS 900′ |
| PRC3-4 | 1070638.081 | 2767694.261 | |
| PI4 | 1069775.198 | 2767438.461 | RADIUS 900′ |
| PT4 | 1070672.559 | 2767507.34 | |

*APPROXIMATE LOCATIONS MAY BE ADJUSTED TO FIELD CONDITIONS

| STAGE 2 TEMPORARY CONCRETE BARRIER, TYPE F* | | | | |
|---|---|---|---|---|
| TYPE | LOCATION | FROM | TO | REMARKS |
| TIE-DOWN STRAP | WB-70 | 1070594.69 N<br>2768271.84 E | 1070587.59 N<br>2768169.76 E | ALONG TEMP. SHLD. |
| TIE-DOWN STRAP | WB-70 | 1070587.59 N<br>2768169.76 E | 1070588.34 N<br>2768146.96 E | ALONG TEMP. SHLD. |
| ANCHORING SYSTEM | WB-70 | 1070588.34 N<br>2768146.96 E | 1070592.24 N<br>2768040.84 E | ALONG TEMP. SHLD. |
| TIE-DOWN STRAP | WB-70 | 1070592.24 N<br>2768040.84 E | 1070592.99 N<br>2768021.62 E | ALONG TEMP. SHLD. |
| TIE-DOWN STRAP | EB-70 | 1070536.74 N<br>2767806.02 E | 1070524.50 N<br>2767911.09 E | ALONG TEMP. SHLD. |
| TIE-DOWN STRAP | EB-70 | 1070524.50 N<br>2767911.09 E | 1070519.74 N<br>2768025.81 E | ALONG TEMP. SHLD. |
| TIE-DOWN STRAP | EB-70 | 1070519.74 N<br>2768025.81 E | 1070518.60 N<br>2768036.40 E | ALONG TEMP. SHLD. |
| ANCHORING SYSTEM | EB-70 | 1070518.60 N<br>2768036.40 E | 1070506.86 N<br>2768145.60 E | ALONG TEMP. SHLD. |
| TIE-DOWN STRAP | EB-70 | 1070506.86 N<br>2768145.60 E | 1070505.31 N<br>2768159.97 E | ALONG TEMP. SHLD. |
| TIE-DOWN STRAP | EB-70 | 1070505.31 N<br>2768159.97 E | 1070487.39 N<br>2768273.52 E | ALONG TEMP. SHLD. |

*APPROXIMATE LOCATIONS MAY BE ADJUSTED TO FIELD CONDITIONS

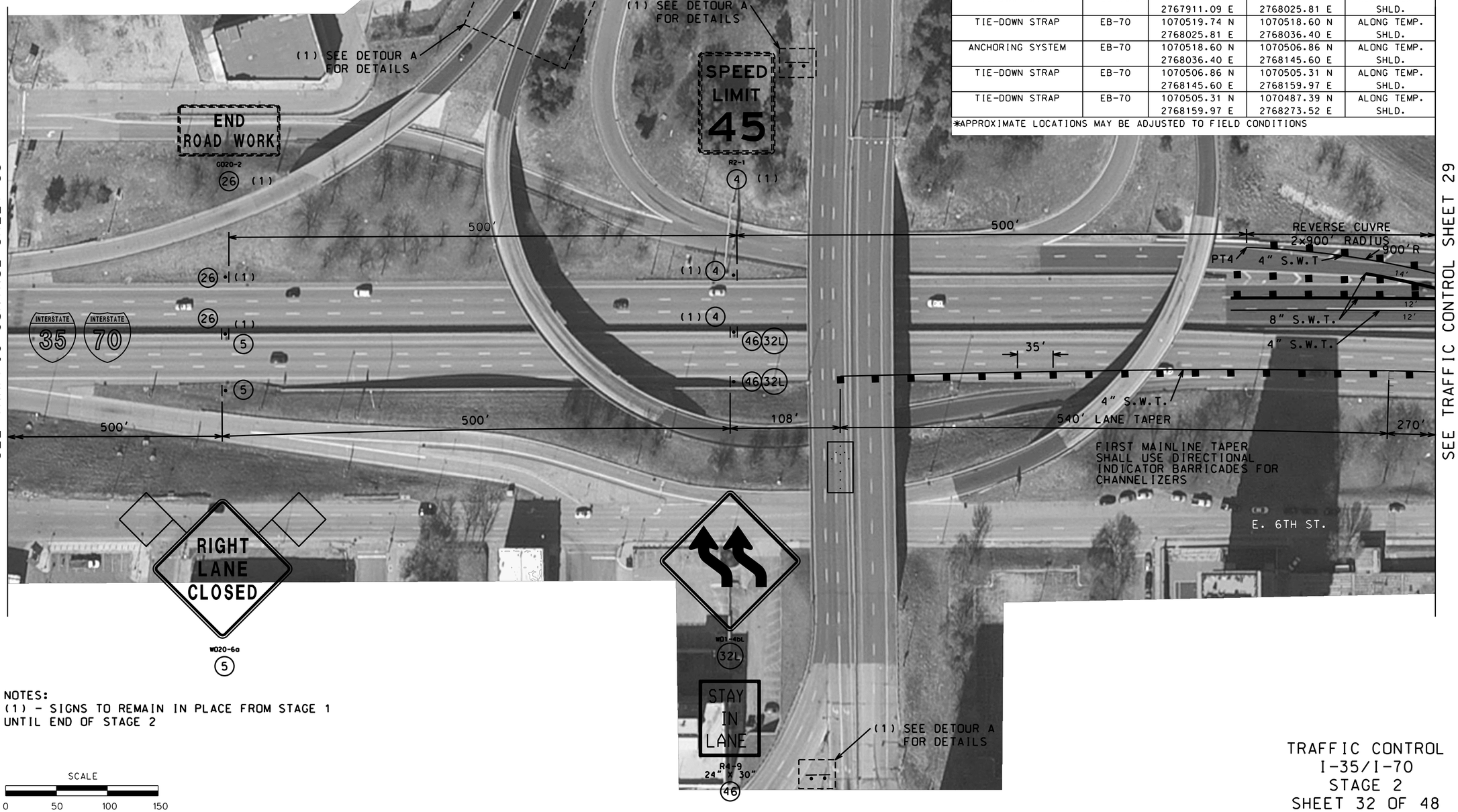


SEE TRAFFIC CONTROL SHEET 33

SEE TRAFFIC CONTROL SHEET 29

NOTES:
(1) - SIGNS TO REMAIN IN PLACE FROM STAGE 1 UNTIL END OF STAGE 2

SCALE
0 50 100 150

TRAFFIC CONTROL
I-35/I-70
STAGE 2
SHEET 32 OF 48

"THIS MEDIA SHOULD NOT BE CONSIDERED A CERTIFIED DOCUMENT."

| DATE PREPARED | |
|---|---|
| 12/13/2012 | |
| ROUTE 35/70 | STATE MO |
| DISTRICT KC | SHEET NO. 57 |
| COUNTY JACKSON | |
| JOB NO. J4I2371 | |
| CONTRACT ID. | |
| PROJECT NO. | |
| BRIDGE NO. L07816, L07817 | |

| DATE | DESCRIPTION |
|---|---|
| | |

MISSOURI HIGHWAYS AND TRANSPORTATION COMMISSION
105 WEST CAPITOL
JEFFERSON CITY, MO 65102
1-888-ASK-MODOT (1-888-275-6636)

IF A SEAL IS PRESENT ON THIS SHEET IT HAS BEEN ELECTRONICALLY SEALED AND DATED.

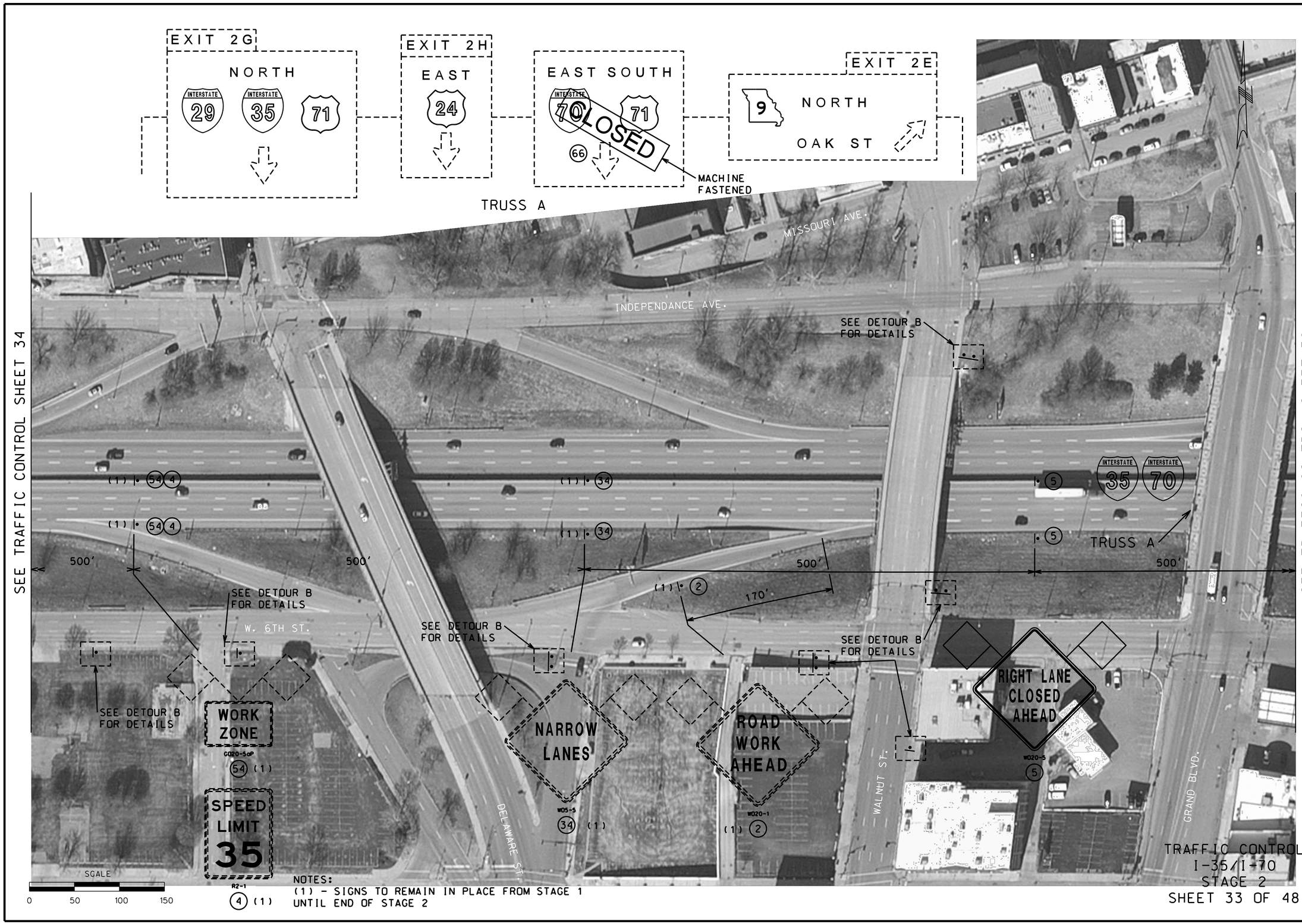


NOTES:
(1) - SIGNS TO REMAIN IN PLACE FROM STAGE 1 UNTIL END OF STAGE 2

TRAFFIC CONTROL
I-35/I-70
STAGE 2
SHEET 33 OF 48

"THIS MEDIA SHOULD NOT BE CONSIDERED A CERTIFIED DOCUMENT."

| | |
|---|---|
| DATE PREPARED | 12/13/2012 |
| ROUTE | 35/70 |
| STATE | MO |
| DISTRICT | KC |
| SHEET NO. | 58 |
| COUNTY | JACKSON |
| JOB NO. | J4I2371 |
| CONTRACT ID. | |
| PROJECT NO. | |
| BRIDGE NO. | L07816, L07817 |

| DATE | DESCRIPTION |
|---|---|
| | |

MISSOURI HIGHWAYS AND TRANSPORTATION COMMISSION
105 WEST CAPITOL
JEFFERSON CITY, MO 65102
1-888-ASK-MODOT (1-888-275-6636)

IF A SEAL IS PRESENT ON THIS SHEET IT HAS BEEN ELECTRONICALLY SEALED AND DATED.

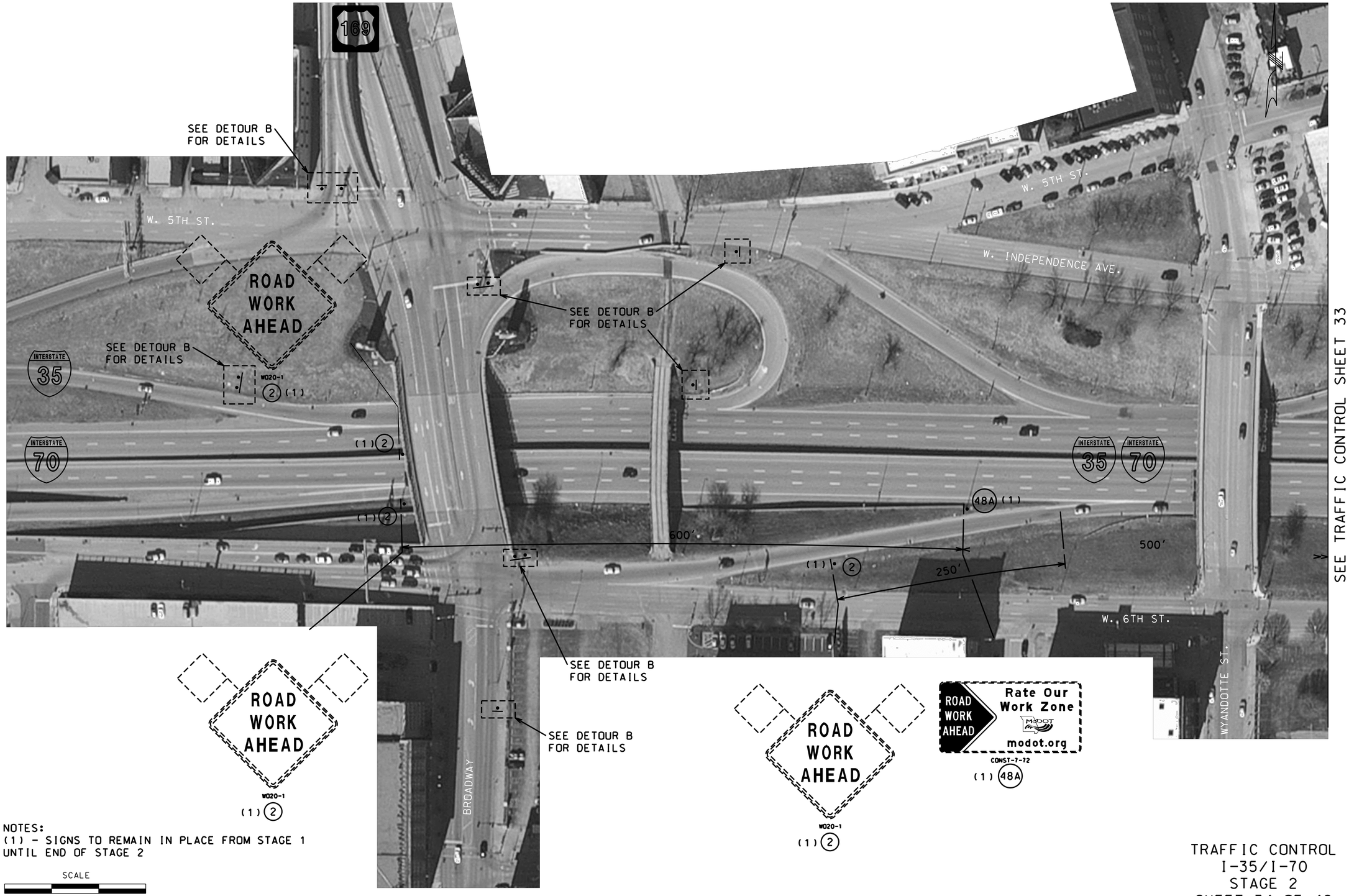


NOTES:
(1) - SIGNS TO REMAIN IN PLACE FROM STAGE 1
UNTIL END OF STAGE 2

SCALE
0 50 100 150

TRAFFIC CONTROL
I-35/I-70
STAGE 2
SHEET 34 OF 48

SEE TRAFFIC CONTROL SHEET 33

"THIS MEDIA SHOULD NOT BE CONSIDERED A CERTIFIED DOCUMENT."

| DATE PREPARED | |
|---|---|
| 12/13/2012 | |
| ROUTE | STATE |
| 35/70 | MO |
| DISTRICT | SHEET NO. |
| KC | 59 |
| COUNTY | |
| JACKSON | |
| JOB NO. | |
| J4I2371 | |
| CONTRACT ID. | |
| PROJECT NO. | |
| BRIDGE NO. | |
| L07816, L07817 | |

| DATE | DESCRIPTION |
|---|---|
| | |

MISSOURI HIGHWAYS AND TRANSPORTATION COMMISSION
105 WEST CAPITOL
JEFFERSON CITY, MO 65102
1-888-ASK-MODOT (1-888-275-6636)

IF A SEAL IS PRESENT ON THIS SHEET IT HAS BEEN ELECTRONICALLY SEALED AND DATED.

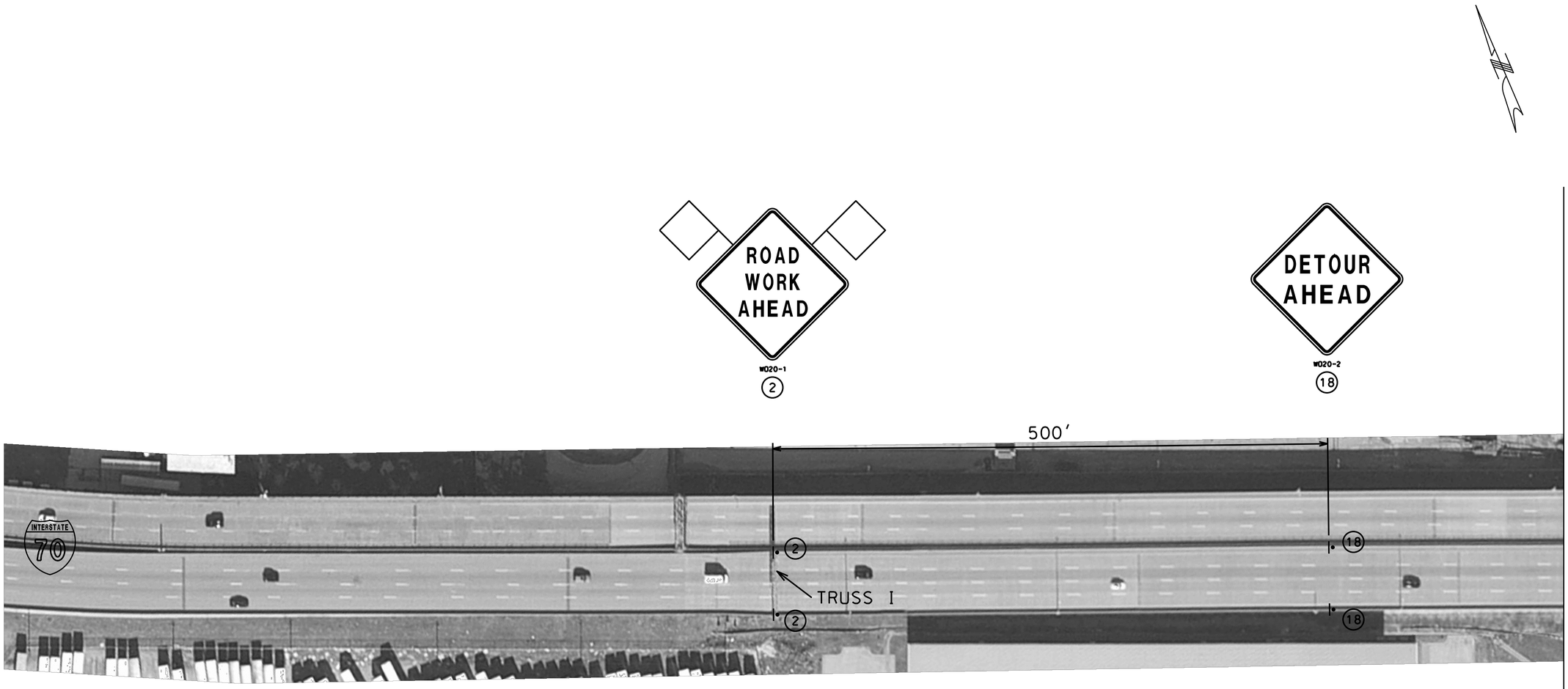


SEE TRAFFIC CONTROL SHEET 36

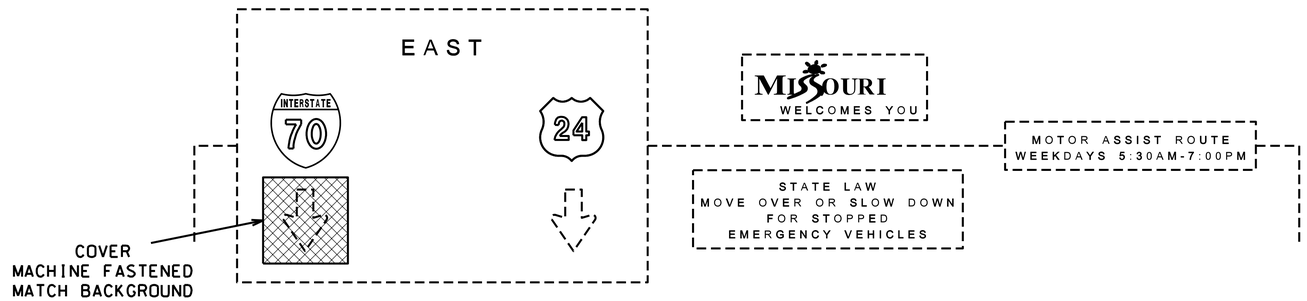


TRUSS I

TRAFFIC CONTROL
I-70
STAGE 2 DETOUR "B"
SHEET 35 OF 48

SCALE
0 50 100 150

"THIS MEDIA SHOULD NOT BE CONSIDERED A CERTIFIED DOCUMENT."

| | |
|---|---|
| DATE PREPARED | 12/13/2012 |
| ROUTE | 35/70 |
| STATE | MO |
| DISTRICT | KC |
| SHEET NO. | 60 |
| COUNTY | JACKSON |
| JOB NO. | J4I2371 |
| CONTRACT ID. | |
| PROJECT NO. | |
| BRIDGE NO. | L07816, L07817 |

| DATE | DESCRIPTION |
|---|---|
| | |

MISSOURI HIGHWAYS AND TRANSPORTATION COMMISSION
105 WEST CAPITOL
JEFFERSON CITY, MO 65102
1-888-ASK-MODOT (1-888-275-6636)

IF A SEAL IS PRESENT ON THIS SHEET IT HAS BEEN ELECTRONICALLY SEALED AND DATED.

SEE TRAFFIC CONTROL SHEET 35

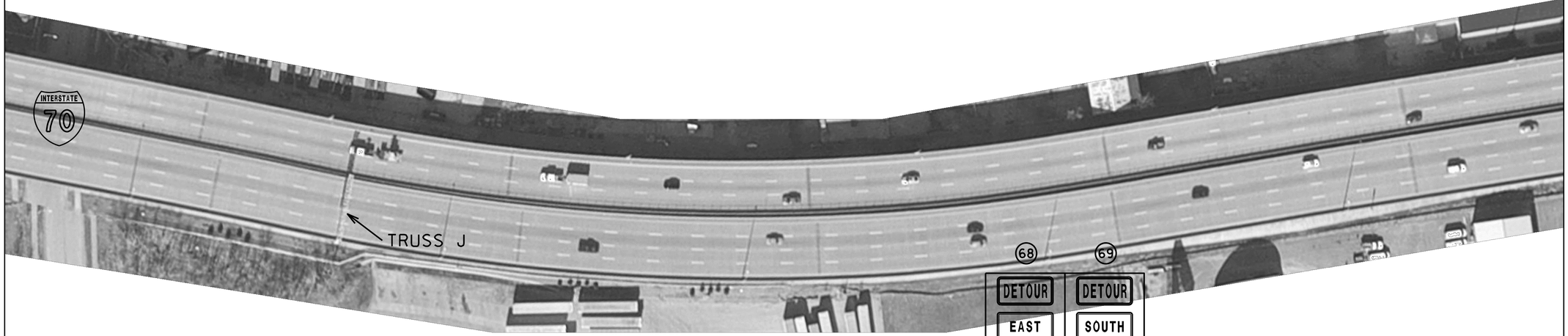


SEE TRAFFIC CONTROL SHEET 37

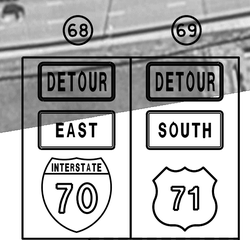


EXIT 2G

INTERSTATE 35 NORTH

DES MOINES
1 1/2 MILES

DOWNTOWN
EXIT AT
BROADWAY

EXIT 2B

BEARDSLEY
ROAD
1/2 MILE

EXIT 2A

INTERSTATE 35 SOUTH

WITCHITA

EXIT ONLY

TRUSS J

SCALE

0 50 100 150

TRAFFIC CONTROL
I-70
STAGE 2 DETOUR "B"
SHEET 36 OF 48

"THIS MEDIA SHOULD NOT BE CONSIDERED A CERTIFIED DOCUMENT."

| | |
|---|---|
| DATE PREPARED | 12/13/2012 |
| ROUTE | 35/70 |
| STATE | MO |
| DISTRICT | KC |
| SHEET NO. | 61 |
| COUNTY | JACKSON |
| JOB NO. | J4I2371 |
| CONTRACT ID. | |
| PROJECT NO. | |
| BRIDGE NO. | L07816, L07817 |

| DESCRIPTION | DATE |
|---|---|
| | |

MISSOURI HIGHWAYS AND TRANSPORTATION COMMISSION

105 WEST CAPITOL
JEFFERSON CITY, MO 65102
1-888-ASK-MODOT (1-888-275-6636)

IF A SEAL IS PRESENT ON THIS SHEET IT HAS BEEN ELECTRONICALLY SEALED AND DATED.

SEE TRAFFIC CONTROL SHEET 36

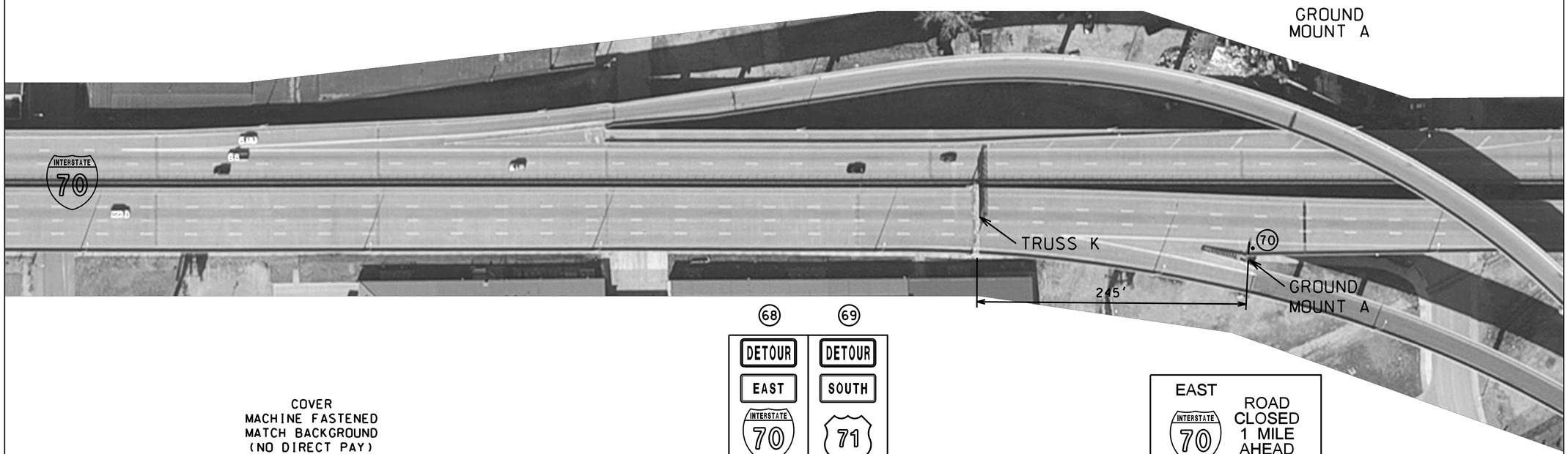


SEE TRAFFIC CONTROL SHEET 38

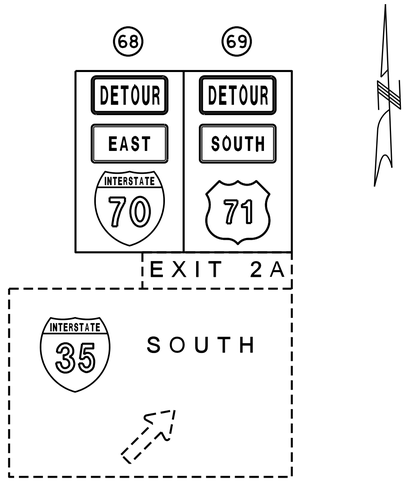


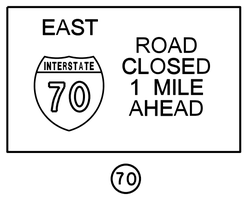


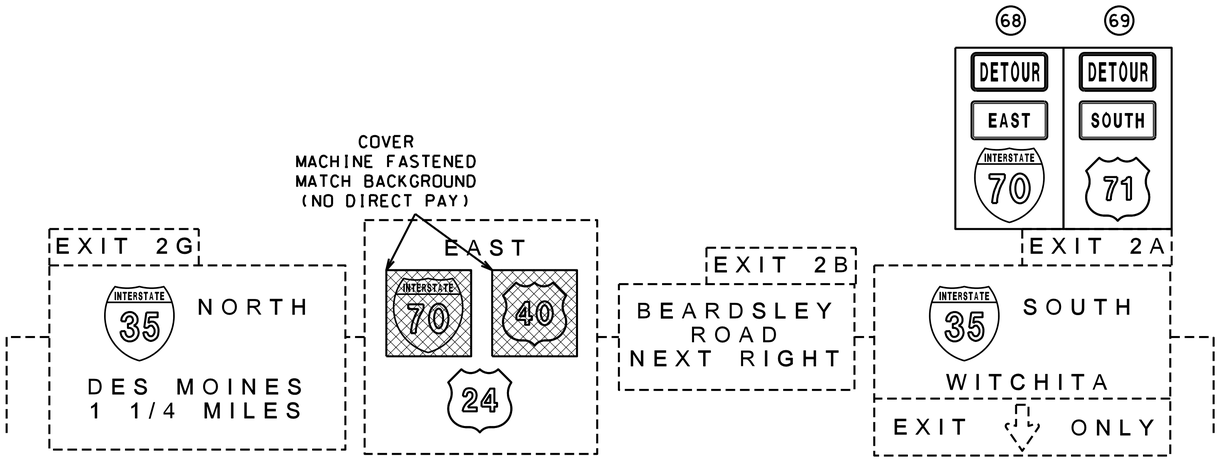


SCALE

0 50 100 150

TRAFFIC CONTROL
I-70
STAGE 2 DETOUR "B"
SHEET 37 OF 48

"THIS MEDIA SHOULD NOT BE CONSIDERED A CERTIFIED DOCUMENT."

| | |
|---|---|
| DATE PREPARED | 12/13/2012 |
| ROUTE | 35/70 |
| STATE | MO |
| DISTRICT | KC |
| SHEET NO. | 62 |
| COUNTY | JACKSON |
| JOB NO. | J4I2371 |
| CONTRACT ID. | |
| PROJECT NO. | |
| BRIDGE NO. | L07816, L07817 |

| DATE | DESCRIPTION |
|---|---|
| | |

MISSOURI HIGHWAYS AND TRANSPORTATION COMMISSION

105 WEST CAPITOL
JEFFERSON CITY, MO 65102
1-888-ASK-MODOT (1-888-275-6636)

IF A SEAL IS PRESENT ON THIS SHEET IT HAS BEEN ELECTRONICALLY SEALED AND DATED.

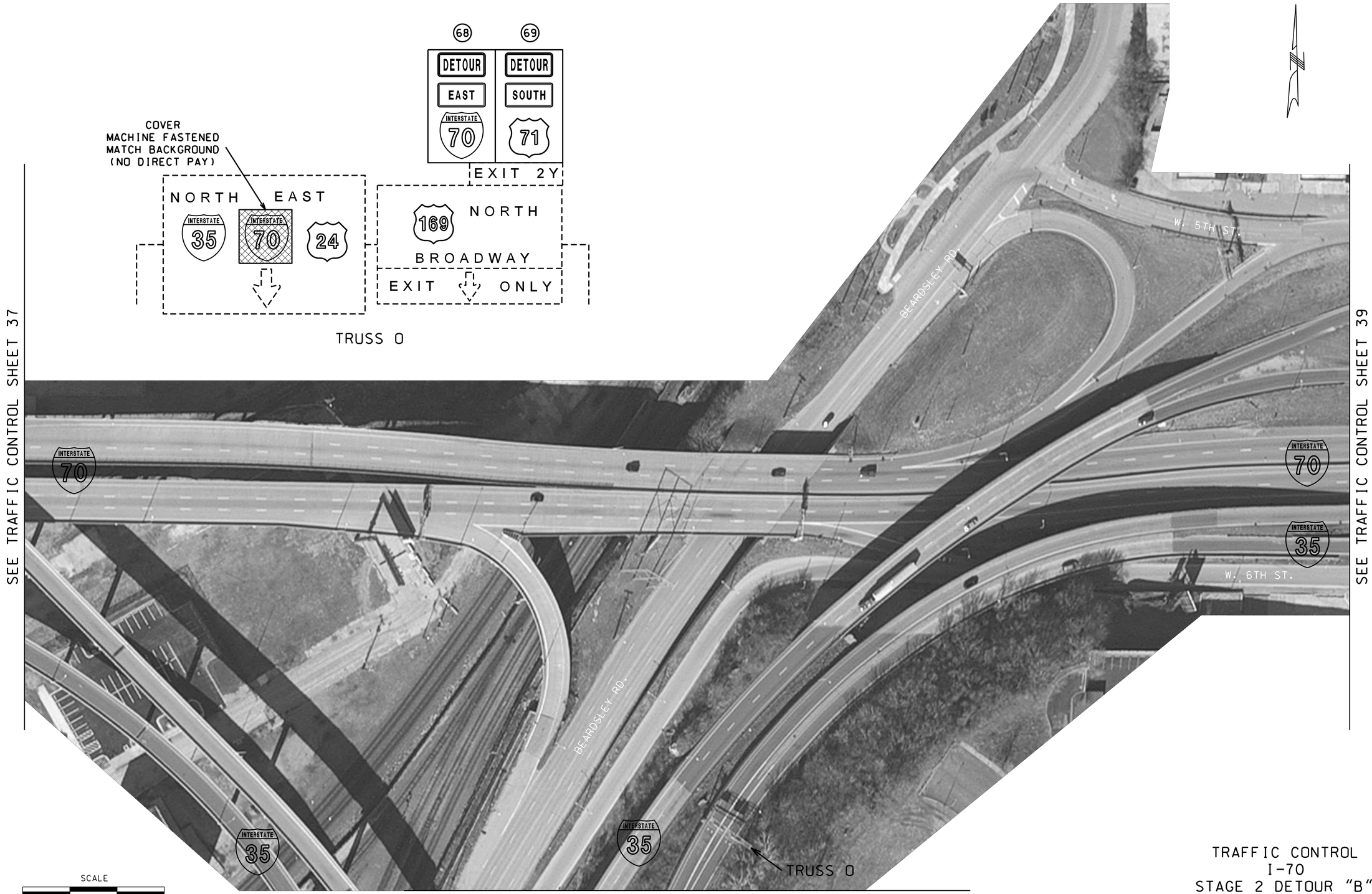


TRAFFIC CONTROL
I-70
STAGE 2 DETOUR "B"
SHEET 38 OF 46

"THIS MEDIA SHOULD NOT BE CONSIDERED A CERTIFIED DOCUMENT."

| | |
|---|---|
| DATE PREPARED | 12/13/2012 |
| ROUTE | 35/70 |
| STATE | MO |
| DISTRICT | KC |
| SHEET NO. | 63 |
| COUNTY | JACKSON |
| JOB NO. | J4I2371 |
| CONTRACT ID. | |
| PROJECT NO. | |
| BRIDGE NO. | L07816, L07817 |

| DATE | DESCRIPTION |
|---|---|
| | |

MISSOURI HIGHWAYS AND TRANSPORTATION COMMISSION

105 WEST CAPITOL
JEFFERSON CITY, MO 65102
1-888-ASK-MODOT (1-888-275-6636)

IF A SEAL IS PRESENT ON THIS SHEET IT HAS BEEN ELECTRONICALLY SEALED AND DATED.

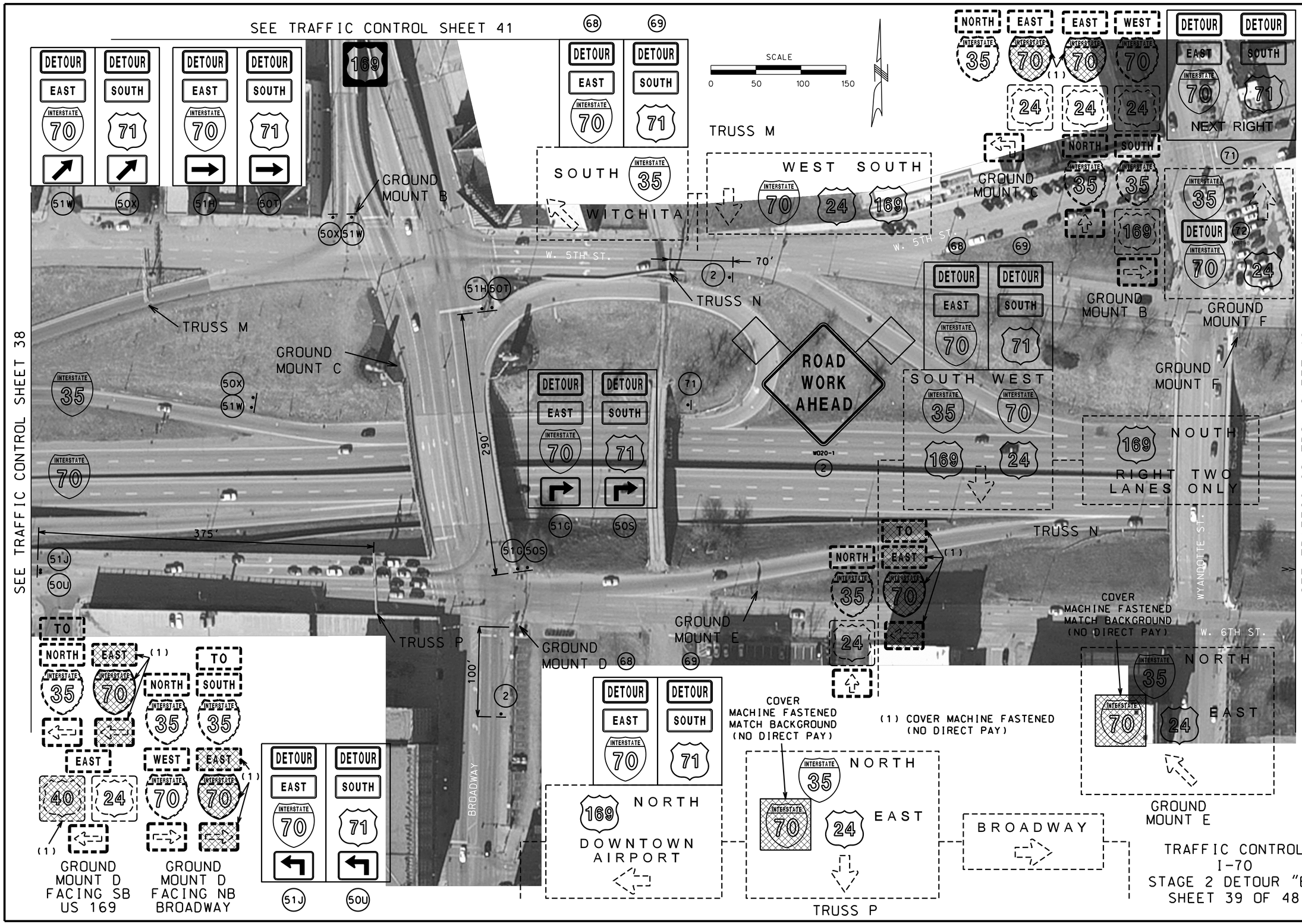


TRAFFIC CONTROL
I-70
STAGE 2 DETOUR "B"
SHEET 39 OF 48

"THIS MEDIA SHOULD NOT BE CONSIDERED A CERTIFIED DOCUMENT."

| | |
|---|---|
| DATE PREPARED | 12/13/2012 |
| ROUTE | 35/70 |
| STATE | MO |
| DISTRICT | KC |
| SHEET NO. | 64 |
| COUNTY | JACKSON |
| JOB NO. | J4I2371 |
| CONTRACT ID. | |
| PROJECT NO. | |
| BRIDGE NO. | L07816, L07817 |

| DATE | DESCRIPTION |
|---|---|
| | |

MISSOURI HIGHWAYS AND TRANSPORTATION COMMISSION
105 WEST CAPITOL
JEFFERSON CITY, MO 65102
1-888-ASK-MODOT (1-888-275-6636)

IF A SEAL IS PRESENT ON THIS SHEET IT HAS BEEN ELECTRONICALLY SEALED AND DATED.

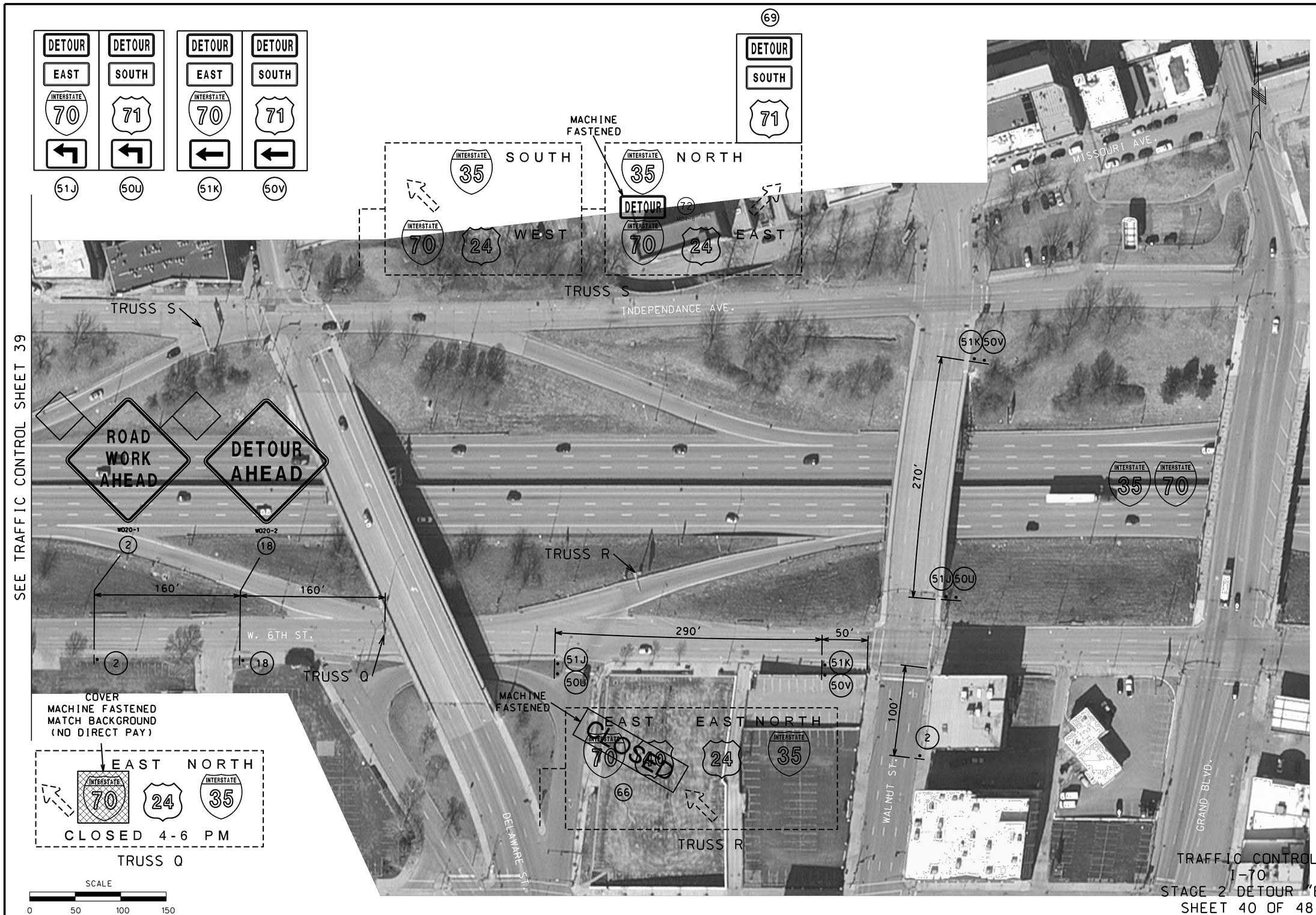


SEE TRAFFIC CONTROL SHEET 39

TRAFFIC CONTROL
I-70
STAGE 2 DETOUR "B"
SHEET 40 OF 48

"THIS MEDIA SHOULD NOT BE CONSIDERED A CERTIFIED DOCUMENT."

| | |
|---|---|
| DATE PREPARED | 12/13/2012 |
| ROUTE | 35/70 |
| STATE | MO |
| DISTRICT | KC |
| SHEET NO. | 65 |
| COUNTY | JACKSON |
| JOB NO. | J4I2371 |
| CONTRACT ID. | |
| PROJECT NO. | |
| BRIDGE NO. | L07816, L07817 |

| DATE | DESCRIPTION |
|---|---|
| | |

MISSOURI HIGHWAYS AND TRANSPORTATION COMMISSION

105 WEST CAPITOL
JEFFERSON CITY, MO 65102
1-888-ASK-MODOT (1-888-275-6636)

IF A SEAL IS PRESENT ON THIS SHEET IT HAS BEEN ELECTRONICALLY SEALED AND DATED.

SEE TRAFFIC CONTROL SHEET 39

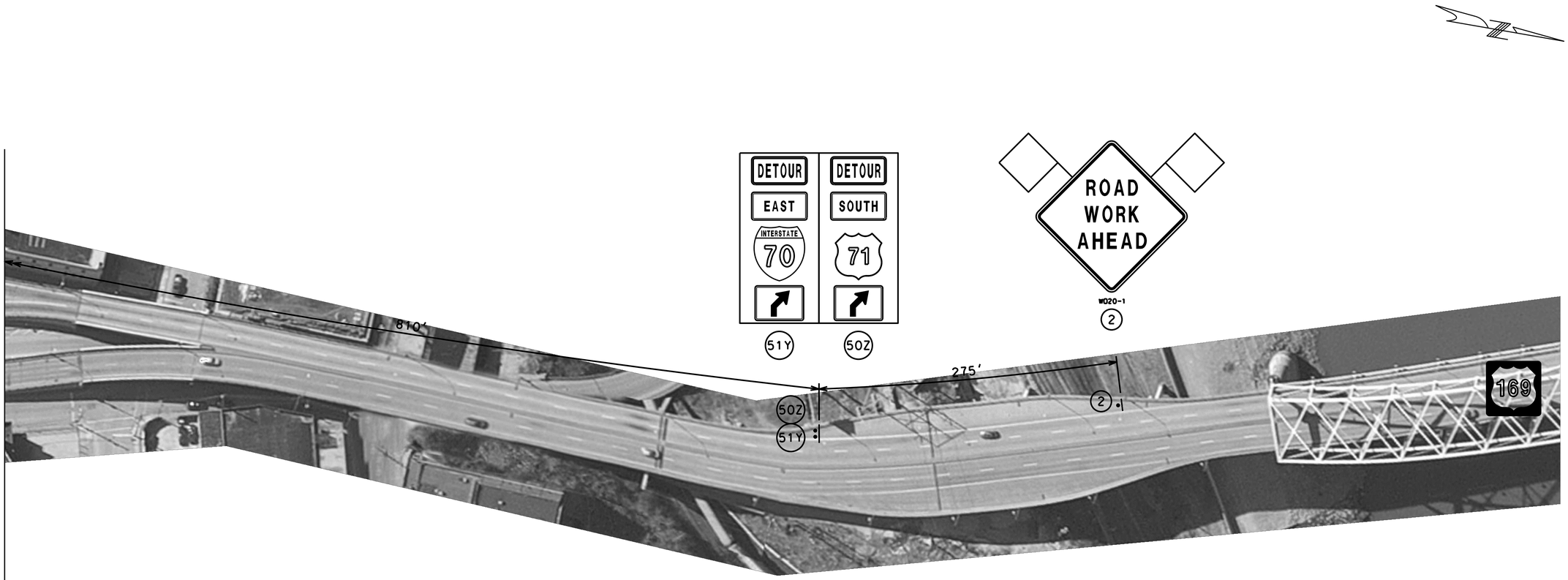


SCALE

0 50 100 150

TRAFFIC CONTROL
I-70
STAGE 2 DETOUR "B"
SHEET 41 OF 48

"THIS MEDIA SHOULD NOT BE CONSIDERED A CERTIFIED DOCUMENT."

| | |
|---|---|
| DATE PREPARED | 12/13/2012 |
| ROUTE | 35/70 |
| STATE | MO |
| DISTRICT | KC |
| SHEET NO. | 66 |
| COUNTY | JACKSON |
| JOB NO. | J4I2371 |
| CONTRACT ID. | |
| PROJECT NO. | |
| BRIDGE NO. | L07816, L07817 |

| DATE | DESCRIPTION |
|---|---|
| | |

MISSOURI HIGHWAYS AND TRANSPORTATION COMMISSION

105 WEST CAPITOL
JEFFERSON CITY, MO 65102
1-888-ASK-MODOT (1-888-275-6636)

IF A SEAL IS PRESENT ON THIS SHEET IT HAS BEEN ELECTRONICALLY SEALED AND DATED.

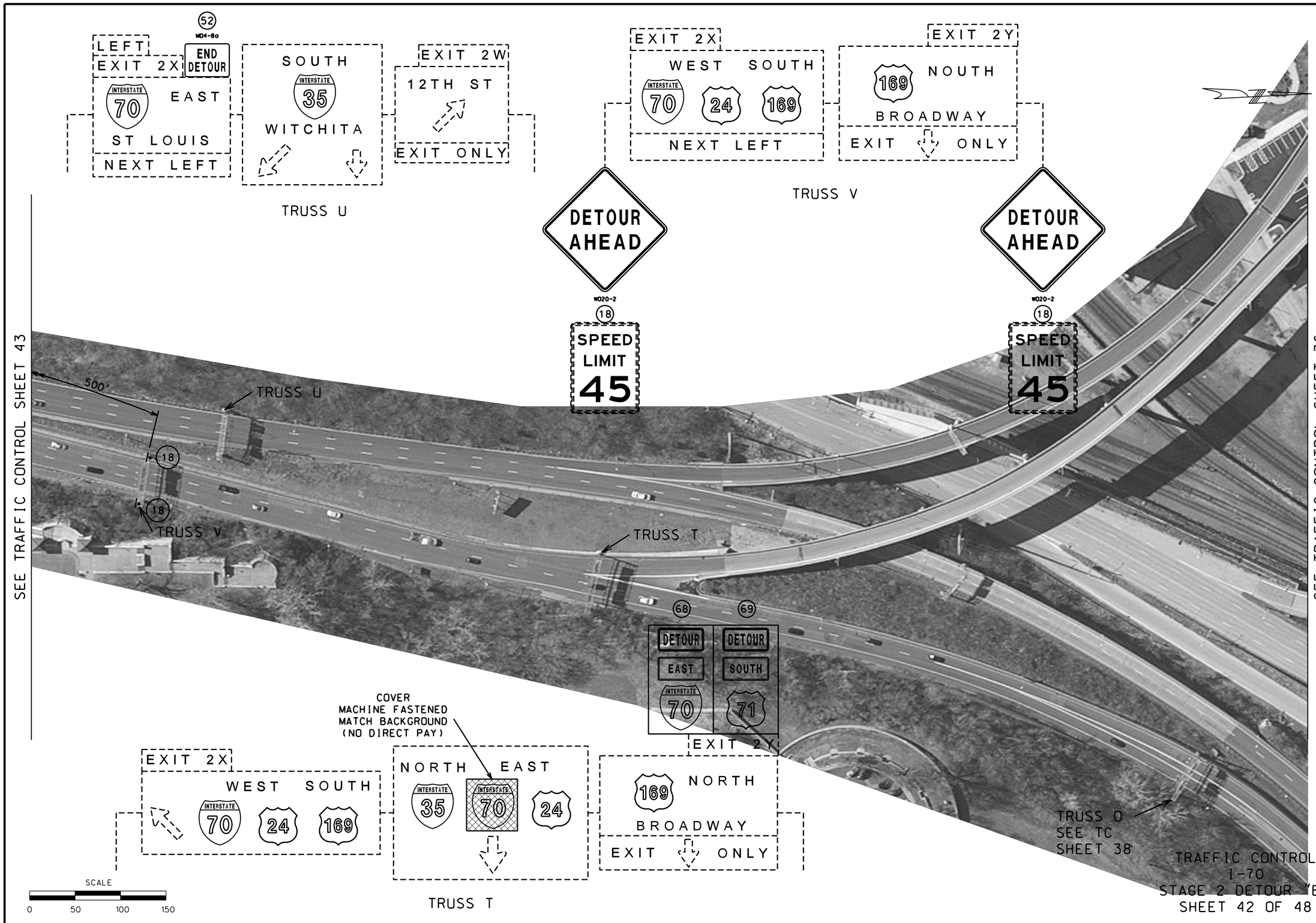


TRAFFIC CONTROL
I-70
STAGE 2 DETOUR "B"
SHEET 42 OF 48

"THIS MEDIA SHOULD NOT BE CONSIDERED A CERTIFIED DOCUMENT."

| | |
|---|---|
| DATE PREPARED | 12/13/2012 |
| ROUTE | 35/70 |
| STATE | MO |
| DISTRICT | KC |
| SHEET NO. | 67 |
| COUNTY | JACKSON |
| JOB NO. | J4I2371 |
| CONTRACT ID. | |
| PROJECT NO. | |
| BRIDGE NO. | L07816, L07817 |

| DATE | DESCRIPTION |
|---|---|
| | |

MISSOURI HIGHWAYS AND TRANSPORTATION COMMISSION
105 WEST CAPITOL
JEFFERSON CITY, MO 65102
1-888-ASK-MODOT (1-888-275-6636)

IF A SEAL IS PRESENT ON THIS SHEET IT HAS BEEN ELECTRONICALLY SEALED AND DATED.

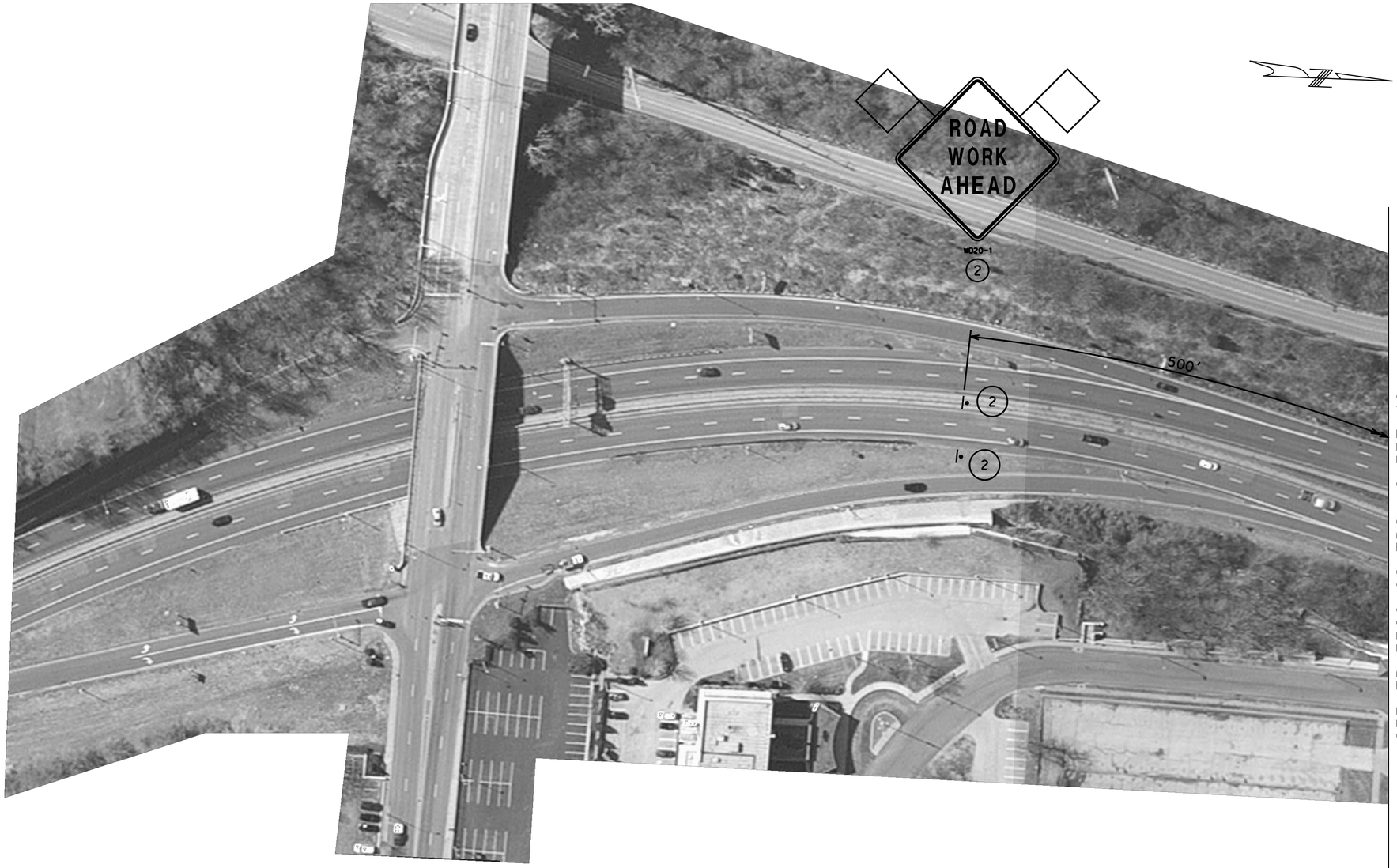


SEE TRAFFIC CONTROL SHEET 42

SCALE

0 50 100 150

TRAFFIC CONTROL
I-70
STAGE 2 DETOUR "B"
SHEET 43 OF 48

"THIS MEDIA SHOULD NOT BE CONSIDERED A CERTIFIED DOCUMENT."

| | |
|---|---|
| DATE PREPARED | 12/13/2012 |
| ROUTE | 35/70 |
| STATE | MO |
| DISTRICT | KC |
| SHEET NO. | 68 |
| COUNTY | JACKSON |
| JOB NO. | J4I2371 |
| CONTRACT ID. | |
| PROJECT NO. | |
| BRIDGE NO. | L07816, L07817 |

| DATE | DESCRIPTION |
|---|---|
| | |

MISSOURI HIGHWAYS AND TRANSPORTATION COMMISSION

105 WEST CAPITOL
JEFFERSON CITY, MO 65102
1-888-ASK-MODOT (1-888-275-6636)

IF A SEAL IS PRESENT ON THIS SHEET IT HAS BEEN ELECTRONICALLY SEALED AND DATED.

R4-9-24 SHR2L1;
1.500" Radius, 0.625" Border, 0.375" Indent, Black on White;
[STAY] D; [IN] D; [LANE] D;
Table of letter and object lefts.

| | | | |
|---|---|---|---|
| S 3.875 | T 8.125 | A 11.500 | Y 16.000 |
| I 9.375 | N 11.250 | | |
| L 4.000 | A 7.375 | N 12.500 | E 17.000 |

| | |
|---|---|
| SIGN NO. | 46 |
| STATION | |
| ROADWAY | |

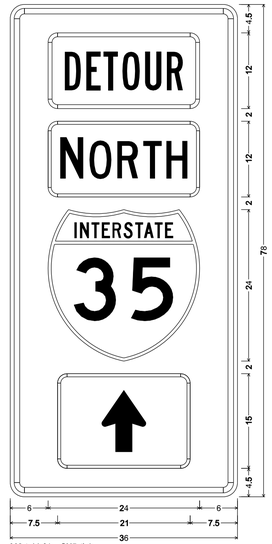


MO4-11-36 SHR4L1;
2.250" Radius, 0.875" Border, 0.625" Indent, Black on Orange;
Table of letter and object lefts.

| |
|---|
| 6.000 |
| 6.000 |
| 6.000 |
| 7.500 |

| | |
|---|---|
| SIGN NO. | 50A |
| STATION | |
| ROADWAY | |

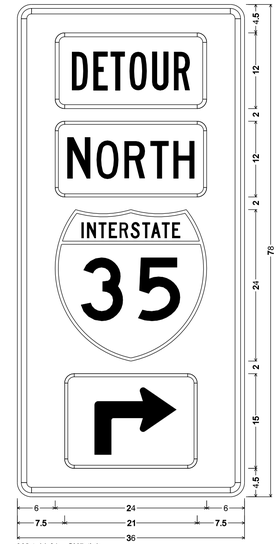


MO4-11-36 SHR4L1;
2.250" Radius, 0.875" Border, 0.625" Indent, Black on Orange;
Table of letter and object lefts.

| |
|---|
| 6.000 |
| 6.000 |
| 6.000 |
| 7.500 |

| | |
|---|---|
| SIGN NO. | 50B |
| STATION | |
| ROADWAY | |

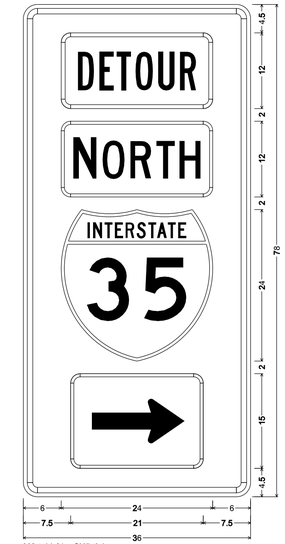


MO4-11-36 SHR4L1;
2.250" Radius, 0.875" Border, 0.625" Indent, Black on Orange;
Table of letter and object lefts.

| |
|---|
| 6.000 |
| 6.000 |
| 6.000 |
| 7.500 |

| | |
|---|---|
| SIGN NO. | 50C |
| STATION | |
| ROADWAY | |

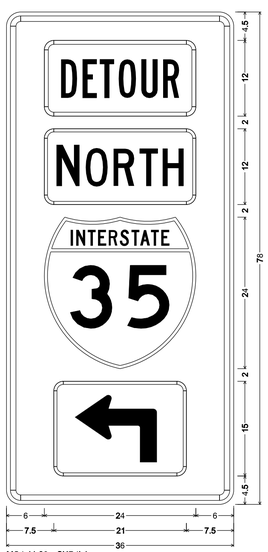


MO4-11-36 SHR4L1;
2.250" Radius, 0.875" Border, 0.625" Indent, Black on Orange;
Table of letter and object lefts.

| |
|---|
| 6.000 |
| 6.000 |
| 6.000 |
| 7.500 |

| | |
|---|---|
| SIGN NO. | 50D |
| STATION | |
| ROADWAY | |

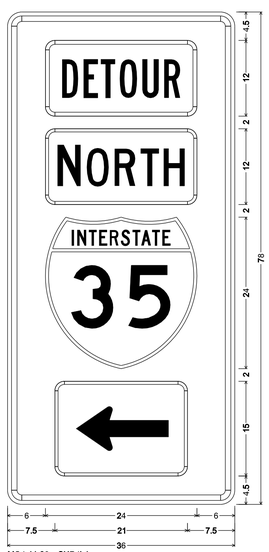


MO4-11-36 SHR4L1;
2.250" Radius, 0.875" Border, 0.625" Indent, Black on Orange;
Table of letter and object lefts.

| |
|---|
| 6.000 |
| 6.000 |
| 6.000 |
| 7.500 |

| | |
|---|---|
| SIGN NO. | 50E |
| STATION | |
| ROADWAY | |

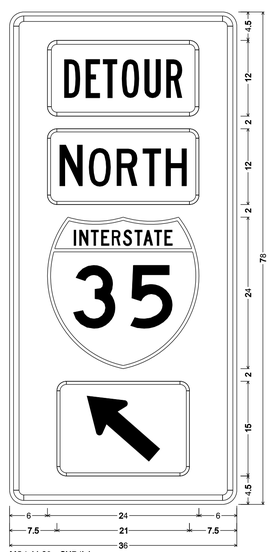


MO4-11-36 SHR4L1;
2.250" Radius, 0.875" Border, 0.625" Indent, Black on Orange;
Table of letter and object lefts.

| |
|---|
| 6.000 |
| 6.000 |
| 6.000 |
| 7.500 |

| | |
|---|---|
| SIGN NO. | 50L |
| STATION | |
| ROADWAY | |

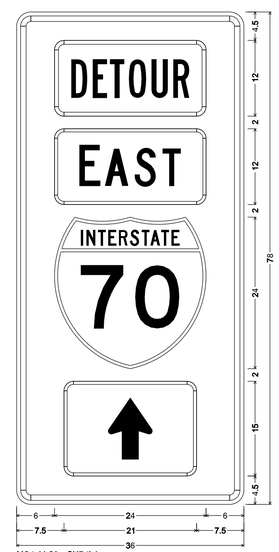


MO4-11-36 SHR4L1;
2.250" Radius, 0.875" Border, 0.625" Indent, Black on Orange;
Table of letter and object lefts.

| |
|---|
| 6.000 |
| 6.000 |
| 6.000 |
| 7.500 |

| | |
|---|---|
| SIGN NO. | 50N |
| STATION | |
| ROADWAY | |

TRAFFIC CONTROL
SHEET 44 OF 48

D-31

"THIS MEDIA SHOULD NOT BE CONSIDERED A CERTIFIED DOCUMENT."

| | |
|---|---|
| DATE PREPARED | 12/13/2012 |
| ROUTE 35/70 | STATE MO |
| DISTRICT KC | SHEET NO. 69 |
| COUNTY | JACKSON |
| JOB NO. | J4I2371 |
| CONTRACT ID. | |
| PROJECT NO. | |
| BRIDGE NO. | |

| DESCRIPTION | DATE |
|---|---|
| | |

MISSOURI HIGHWAYS AND TRANSPORTATION COMMISSION
105 WEST CAPITOL
JEFFERSON CITY, MO 65102
1-888-ASK-MODOT (1-888-275-6636)

IF A SEAL IS PRESENT ON THIS SHEET IT HAS BEEN ELECTRONICALLY SEALED AND DATED.

REV.

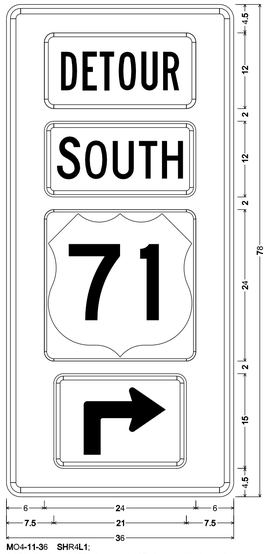


| | |
|---|---|
| SIGN NO. | 50S |
| STATION | |
| ROADWAY | |

MO4-11-36 SHR4L1;
2.250" Radius, 0.875" Border, 0.625" Indent, Black on Orange;
Table of letter and object lefts.

| | |
|---|---|
| | 6.000 |
| | 6.000 |
| | 6.000 |
| | 7.500 |

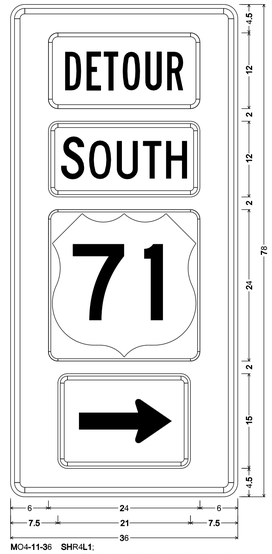


| | |
|---|---|
| SIGN NO. | 50T |
| STATION | |
| ROADWAY | |

MO4-11-36 SHR4L1;
2.250" Radius, 0.875" Border, 0.625" Indent, Black on Orange;
Table of letter and object lefts.

| | |
|---|---|
| | 6.000 |
| | 6.000 |
| | 6.000 |
| | 7.500 |

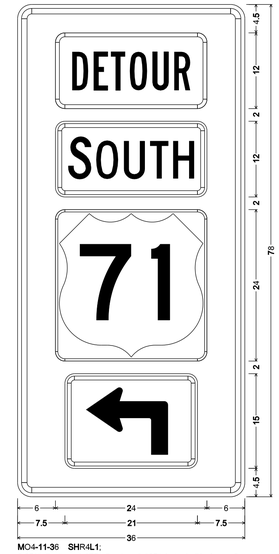


| | |
|---|---|
| SIGN NO. | 50U |
| STATION | |
| ROADWAY | |

MO4-11-36 SHR4L1;
2.250" Radius, 0.875" Border, 0.625" Indent, Black on Orange;
Table of letter and object lefts.

| | |
|---|---|
| | 6.000 |
| | 6.000 |
| | 6.000 |
| | 7.500 |

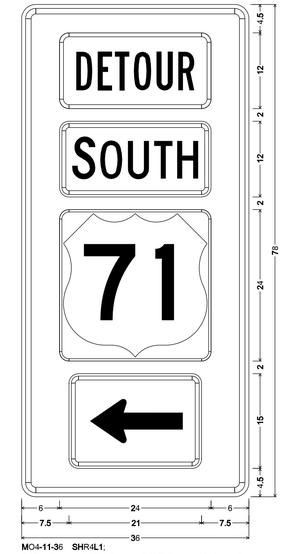


| | |
|---|---|
| SIGN NO. | 50V |
| STATION | |
| ROADWAY | |

MO4-11-36 SHR4L1;
2.250" Radius, 0.875" Border, 0.625" Indent, Black on Orange;
Table of letter and object lefts.

| | |
|---|---|
| | 6.000 |
| | 6.000 |
| | 6.000 |
| | 7.500 |

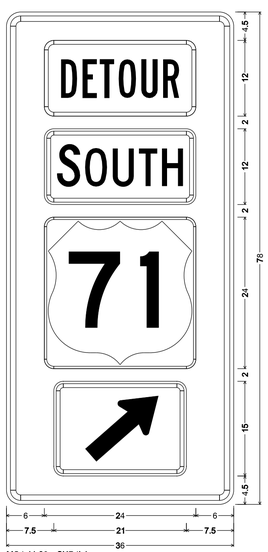


| | |
|---|---|
| SIGN NO. | 50X |
| STATION | |
| ROADWAY | |

MO4-11-36 SHR4L1;
2.250" Radius, 0.875" Border, 0.625" Indent, Black on Orange;
Table of letter and object lefts.

| | |
|---|---|
| | 6.000 |
| | 6.000 |
| | 6.000 |
| | 7.500 |

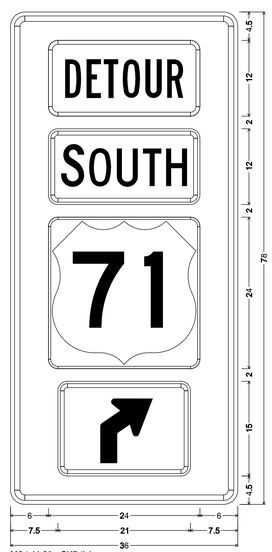


| | |
|---|---|
| SIGN NO. | 50Z |
| STATION | |
| ROADWAY | |

MO4-11-36 SHR4L1;
2.250" Radius, 0.875" Border, 0.625" Indent, Black on Orange;
Table of letter and object lefts.

| | |
|---|---|
| | 6.000 |
| | 6.000 |
| | 6.000 |
| | 7.500 |

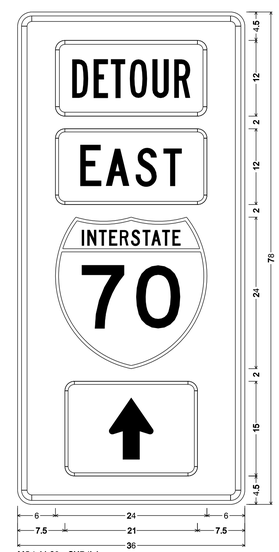


| | |
|---|---|
| SIGN NO. | 51F |
| STATION | |
| ROADWAY | |

MO4-11-36 SHR4L1;
2.250" Radius, 0.875" Border, 0.625" Indent, Black on Orange;
Table of letter and object lefts.

| | |
|---|---|
| | 6.000 |
| | 6.000 |
| | 6.000 |
| | 7.500 |

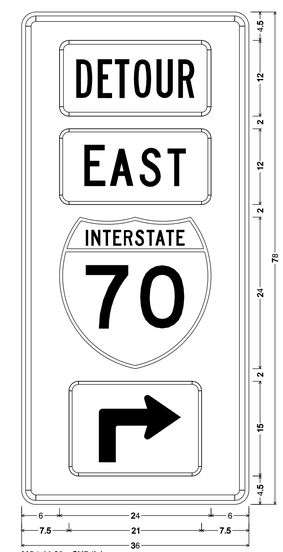


| | |
|---|---|
| SIGN NO. | 51G |
| STATION | |
| ROADWAY | |

MO4-11-36 SHR4L1;
2.250" Radius, 0.875" Border, 0.625" Indent, Black on Orange;
Table of letter and object lefts.

| | |
|---|---|
| | 6.000 |
| | 6.000 |
| | 6.000 |
| | 7.500 |

TRAFFIC CONTROL
SHEET 45 OF 48

D-31

"THIS MEDIA SHOULD NOT BE CONSIDERED A CERTIFIED DOCUMENT."

| | |
|---|---|
| DATE PREPARED | 12/13/2012 |
| ROUTE | 35/70 |
| STATE | MO |
| DISTRICT | KC |
| SHEET NO. | 70 |
| COUNTY | JACKSON |
| JOB NO. | J4I2371 |
| CONTRACT ID. | |
| PROJECT NO. | |
| BRIDGE NO. | |

| DESCRIPTION | DATE |
|---|---|
| | |

MISSOURI HIGHWAYS AND TRANSPORTATION COMMISSION

105 WEST CAPITOL
JEFFERSON CITY, MO 65102
1-888-ASK-MODOT (1-888-275-6636)

IF A SEAL IS PRESENT ON THIS SHEET IT HAS BEEN ELECTRONICALLY SEALED AND DATED.

REV.

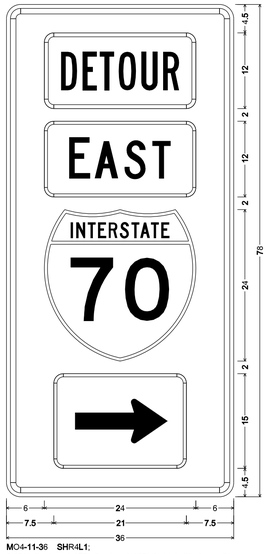


| SIGN NO. | 51H |
|---|---|
| STATION | |
| ROADWAY | |

MO4-11-36 SHR4L1;
2.250" Radius, 0.875" Border, 0.625" Indent, Black on Orange;
Table of letter and object lefts.

| | |
|---|---|
| ▬ | 6.000 |
| ▬ | 6.000 |
| ● | 6.000 |
| ▬ | 7.500 |

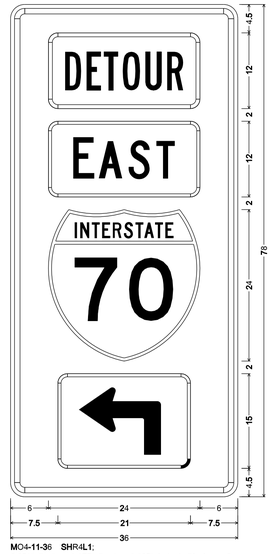


| SIGN NO. | 51J |
|---|---|
| STATION | |
| ROADWAY | |

MO4-11-36 SHR4L1;
2.250" Radius, 0.875" Border, 0.625" Indent, Black on Orange;
Table of letter and object lefts.

| | |
|---|---|
| ▬ | 6.000 |
| ▬ | 6.000 |
| ● | 6.000 |
| ▬ | 7.500 |

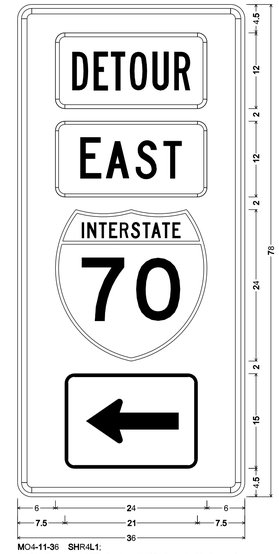


| SIGN NO. | 51K |
|---|---|
| STATION | |
| ROADWAY | |

MO4-11-36 SHR4L1;
2.250" Radius, 0.875" Border, 0.625" Indent, Black on Orange;
Table of letter and object lefts.

| | |
|---|---|
| ▬ | 6.000 |
| ▬ | 6.000 |
| ● | 6.000 |
| ▬ | 7.500 |

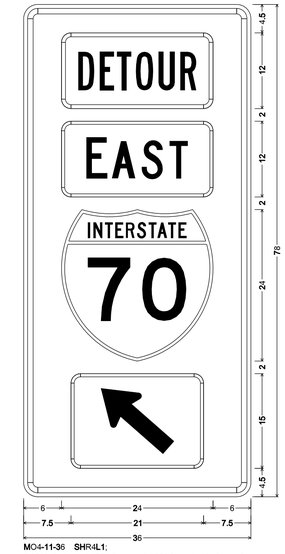


| SIGN NO. | 51L |
|---|---|
| STATION | |
| ROADWAY | |

MO4-11-36 SHR4L1;
2.250" Radius, 0.875" Border, 0.625" Indent, Black on Orange;
Table of letter and object lefts.

| | |
|---|---|
| ▬ | 6.000 |
| ▬ | 6.000 |
| ● | 6.000 |
| ▬ | 7.500 |

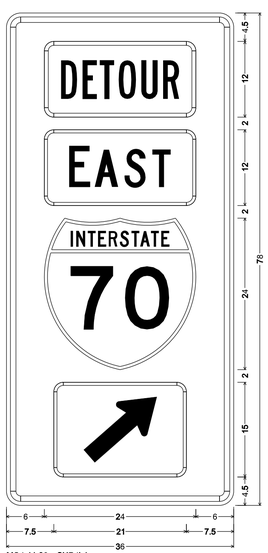


| SIGN NO. | 51W |
|---|---|
| STATION | |
| ROADWAY | |

MO4-11-36 SHR4L1;
2.250" Radius, 0.875" Border, 0.625" Indent, Black on Orange;
Table of letter and object lefts.

| | |
|---|---|
| ▬ | 6.000 |
| ▬ | 6.000 |
| ● | 6.000 |
| ▬ | 7.500 |

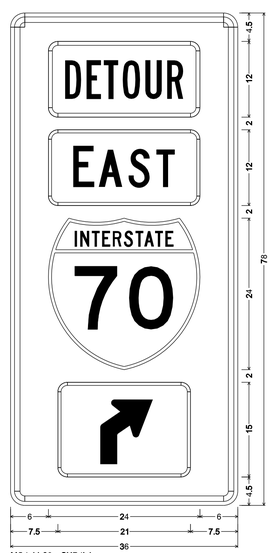


| SIGN NO. | 51Y |
|---|---|
| STATION | |
| ROADWAY | |

MO4-11-36 SHR4L1;
2.250" Radius, 0.875" Border, 0.625" Indent, Black on Orange;
Table of letter and object lefts.

| | |
|---|---|
| ▬ | 6.000 |
| ▬ | 6.000 |
| ● | 6.000 |
| ▬ | 7.500 |

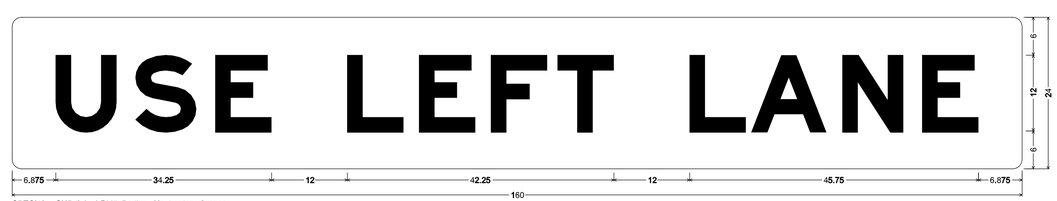


SPECIAL SHR4L1; 1.500" Radius, No border, Orange;
[USE LEFT LANE] Black E Mod;
Table of letter and object lefts.

| | | | | | | | | | | | |
|---|---|---|---|---|---|---|---|---|---|---|---|
| U | S | E | L | E | F | T | L | A | N | E | |
| 6.875 | 19.500 | 32.125 | 53.125 | 64.500 | 75.875 | 86.375 | 107.375 | 117.125 | 131.500 | 144.125 | |

| SIGN NO. | 62 |
|---|---|
| STATION | |
| ROADWAY | |

TRAFFIC CONTROL
SHEET 46 OF 48

D-31

"THIS MEDIA SHOULD NOT BE CONSIDERED A CERTIFIED DOCUMENT."

| DATE PREPARED | |
|---|---|
| 12/13/2012 | |
| ROUTE 35/70 | STATE MO |
| DISTRICT KC | SHEET NO. 71 |
| COUNTY JACKSON | |
| JOB NO. J4I2371 | |
| CONTRACT ID. | |
| PROJECT NO. | |
| BRIDGE NO. | |

| DATE | DESCRIPTION |
|---|---|
| | |

MISSOURI HIGHWAYS AND TRANSPORTATION COMMISSION
105 WEST CAPITOL
JEFFERSON CITY, MO 65102
1-888-ASK-MODOT (1-888-275-6636)

IF A SEAL IS PRESENT ON THIS SHEET IT HAS BEEN ELECTRONICALLY SEALED AND DATED.

REV.

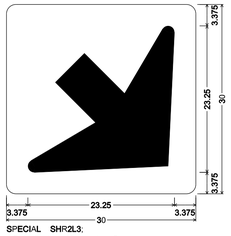


SPECIAL SHR2L3:
1.500" Radius, No border, Green;
Down Arrow 22.000" 315° White;
Table of letter and object lefts.

| |
|---|
| 3.375 |

| | |
|---|---|
| SIGN NO. | 63 |
| STATION | |
| ROADWAY | |

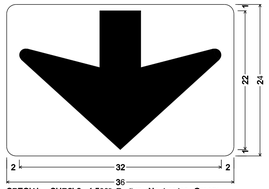


SPECIAL SHR2L3: 1.500" Radius, No border, Green;
Down Arrow 22.000" 270° White;
Table of letter and object lefts.

| |
|---|
| 2.000 |

| | |
|---|---|
| SIGN NO. | 64 |
| STATION | |
| ROADWAY | |

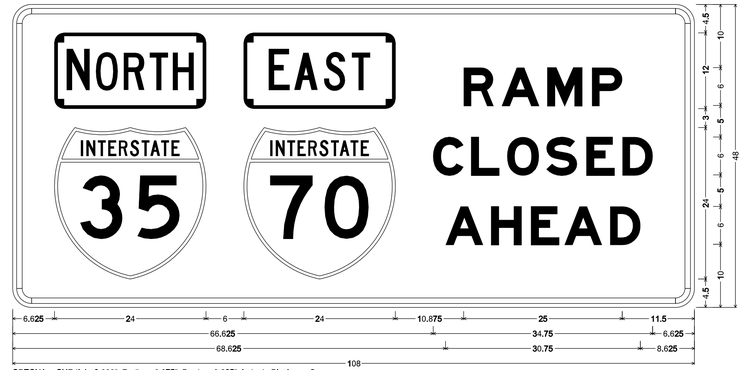


SPECIAL SHR4L1: 3.000" Radius, 0.875" Border, 0.625" Indent, Black on Orange;
[RAMP] E Mod; [CLOSED] E Mod; [AHEAD] E Mod;
Table of letter and object lefts.

| | | | | | | | | |
|---|---|---|---|---|---|---|---|---|
| | | R | A | M | P | | | |
| 6.625 | 36.625 | 71.500 | 77.500 | 84.750 | 91.750 | | | |
| | | C | L | O | S | E | D | |
| 6.625 | 36.625 | 66.625 | 72.625 | 78.375 | 84.625 | 90.875 | 96.625 | |
| A | H | E | A | D | | | | |
| 68.625 | 75.750 | 82.125 | 87.375 | 94.625 | | | | |

| | |
|---|---|
| SIGN NO. | 65 |
| STATION | |
| ROADWAY | |

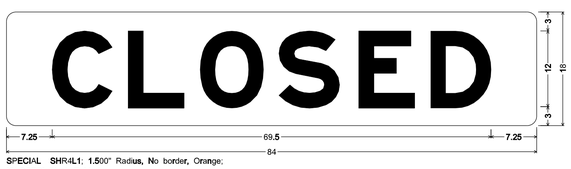


SPECIAL SHR4L1: 1.500" Radius, No border, Orange;
[CLOSED] Black E Mod;
Table of letter and object lefts.

| | | | | | |
|---|---|---|---|---|---|
| C | L | O | S | E | D |
| 7.250 | 19.250 | 30.625 | 43.125 | 55.875 | 67.250 |

| | |
|---|---|
| SIGN NO. | 66 |
| STATION | |
| ROADWAY | |

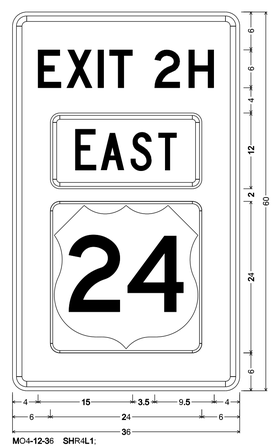


MO4-12-36 SHR4L1:
2.250" Radius, 0.875" Border, 0.625" Indent, Black on Orange;
[EXIT 2H] D 80% spacing;
Table of letter and object lefts.

| | | | | | |
|---|---|---|---|---|---|
| E | X | I | T | 2 | H |
| 4.000 | 8.625 | 13.500 | 15.375 | 22.500 | 27.875 |

| |
|---|
| 6.000 |
| 6.000 |

| | |
|---|---|
| SIGN NO. | 67 |
| STATION | |
| ROADWAY | |

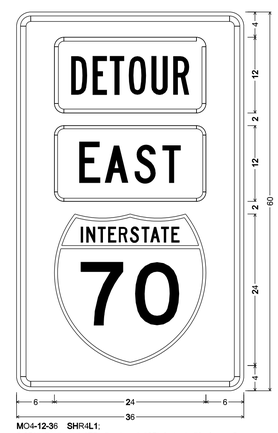


MO4-12-36 SHR4L1:
2.250" Radius, 0.875" Border, 0.625" Indent, Black on Orange;
Table of letter and object lefts.

| |
|---|
| 6.000 |
| 6.000 |
| 6.000 |

| | |
|---|---|
| SIGN NO. | 68 |
| STATION | |
| ROADWAY | |

TRAFFIC CONTROL
SHEET 47 OF 48

D-31

"THIS MEDIA SHOULD NOT BE CONSIDERED A CERTIFIED DOCUMENT."

| | |
|---|---|
| DATE PREPARED | 12/13/2012 |
| ROUTE 35/70 | STATE MO |
| DISTRICT KC | SHEET NO. 72 |
| COUNTY | JACKSON |
| JOB NO. | J4I2371 |
| CONTRACT ID. | |
| PROJECT NO. | |
| BRIDGE NO. | |

| DESCRIPTION | DATE |
|---|---|
| | |

MISSOURI HIGHWAYS AND TRANSPORTATION COMMISSION
105 WEST CAPITOL
JEFFERSON CITY, MO 65102
1-888-ASK-MODOT (1-888-275-6636)

IF A SEAL IS PRESENT ON THIS SHEET IT HAS BEEN ELECTRONICALLY SEALED AND DATED.

REV.

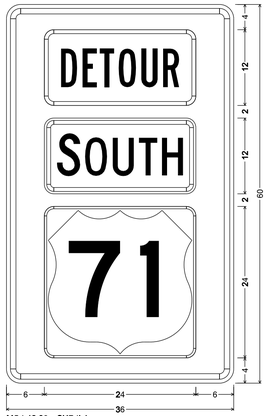


| SIGN NO. | 69 |
|---|---|
| STATION | |
| ROADWAY | |

MO4-12-36 SHR4L1;
2.250" Radius, 0.875" Border, 0.625" Indent, Black on Orange;
Table of letter and object lefts.

| | |
|---|---|
| ▬ | 6.000 |
| ▬ | 6.000 |
| ■ | 6.000 |

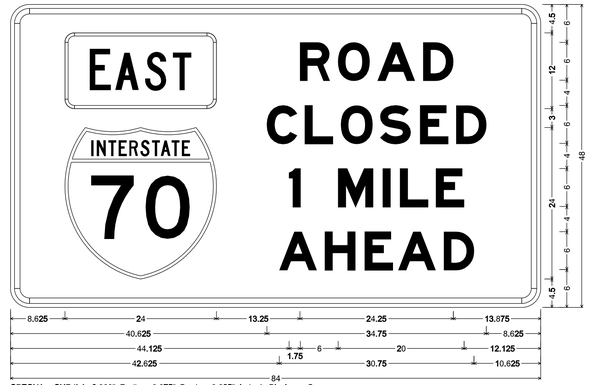


| SIGN NO. | 70 |
|---|---|
| STATION | |
| ROADWAY | |

SPECIAL SHR4L1; 3.000" Radius, 0.875" Border, 0.625" Indent, Black on Orange;
[ROAD] E Mod; [CLOSED] E Mod; [1 MILE] E Mod; [AHEAD] E Mod;
Table of letter and object lefts.

| | | | | | | |
|---|---|---|---|---|---|---|
| ▬ | R | O | A | D | | |
| 8.625 | 45.875 | 51.875 | 58.125 | 65.375 | | |
| ● | C | L | O | S | E | D |
| 8.625 | 40.625 | 46.625 | 52.375 | 58.625 | 64.875 | 70.625 |
| I | M | I | L | E | | |
| 44.125 | 51.875 | 59.000 | 61.750 | 67.375 | | |
| A | H | E | A | D | | |
| 42.625 | 49.750 | 56.125 | 61.375 | 68.625 | | |

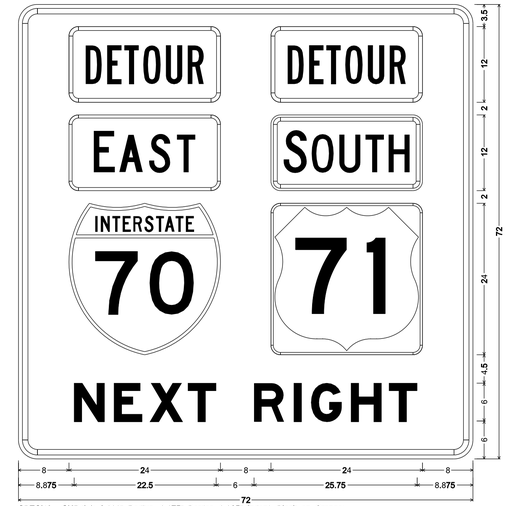


| SIGN NO. | 71 |
|---|---|
| STATION | |
| ROADWAY | |

SPECIAL SHR4L1; 3.000" Radius, 0.875" Border, 0.625" Indent, Black on Orange;
[NEXT RIGHT] E Mod;
Table of letter and object lefts.

| | |
|---|---|
| ▬ | ▬ |
| 8.000 | 40.000 |
| ▬ | ▬ |
| 8.000 | 40.000 |
| ● | ■ |
| 8.000 | 40.000 |

| | | | | | | | | | |
|---|---|---|---|---|---|---|---|---|---|
| N | E | X | T | R | I | G | H | T | |
| 8.875 | 15.125 | 20.875 | 26.875 | 37.375 | 43.625 | 46.375 | 52.750 | 58.750 | |

"THIS MEDIA SHOULD NOT BE CONSIDERED A CERTIFIED DOCUMENT."

| DATE PREPARED | |
|---|---|
| 12/13/2012 | |
| ROUTE | STATE |
| 35/70 | MO |
| DISTRICT | SHEET NO. |
| KC | 73 |
| COUNTY | |
| JACKSON | |
| JOB NO. | |
| J4I2371 | |
| CONTRACT ID. | |
| PROJECT NO. | |
| BRIDGE NO. | |

| DESCRIPTION | DATE |
|---|---|
| | |

MISSOURI HIGHWAYS AND TRANSPORTATION COMMISSION
105 WEST CAPITOL
JEFFERSON CITY, MO 65102
1-888-ASK-MODOT (1-888-275-6636)

IF A SEAL IS PRESENT ON THIS SHEET IT HAS BEEN ELECTRONICALLY SEALED AND DATED.

REV.

TRAFFIC CONTROL
SHEET 48 OF 48

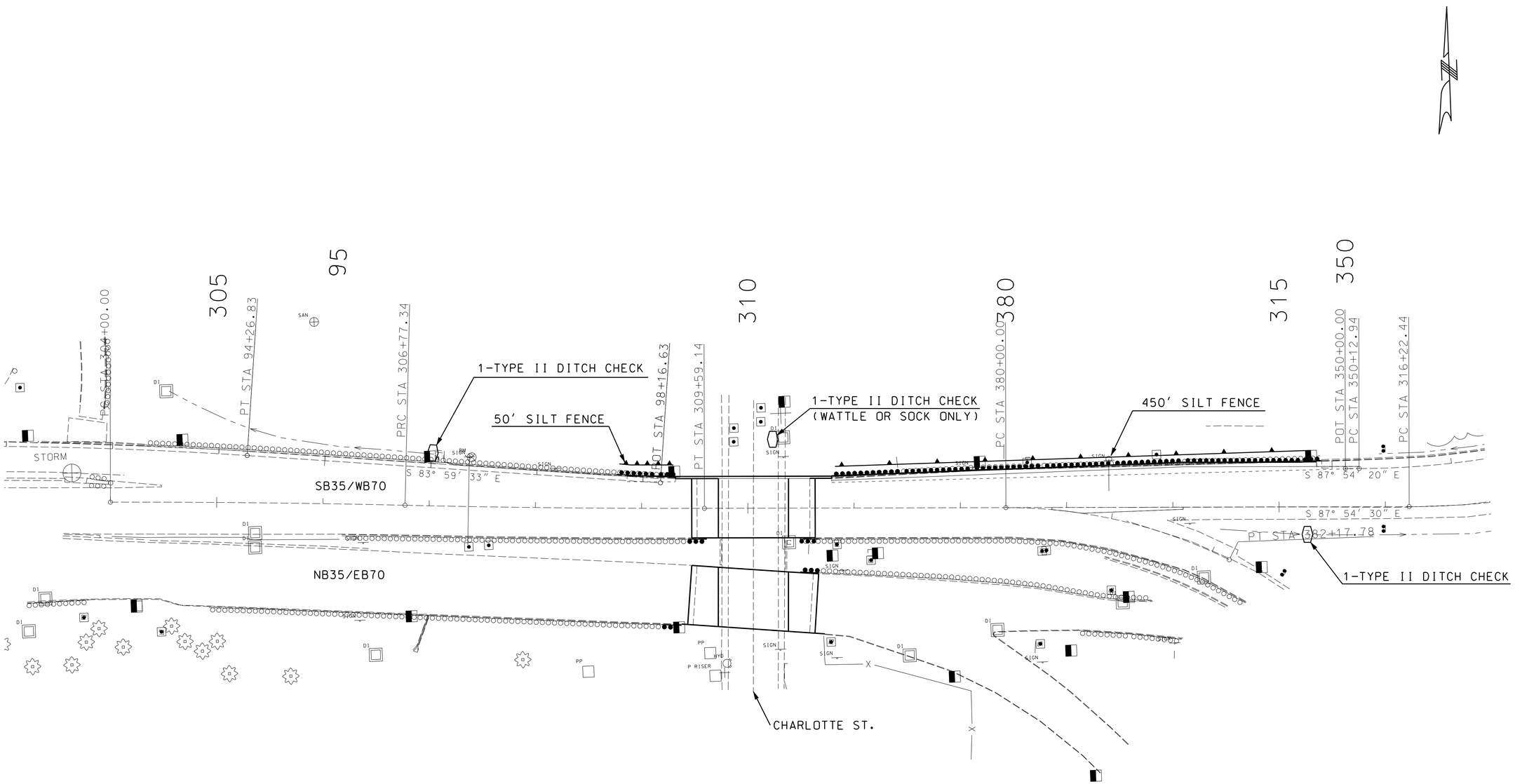


TEMPORARY EROSION CONTROL LEGEND

- TYPE I DITCH CHECK
- TYPE II DITCH CHECK
- TEMPORARY BERM
- SILT FENCE

SCALE

0 50 100 150

EROSION CONTROL
SHEET 1 OF 1

"THIS MEDIA SHOULD NOT BE CONSIDERED A CERTIFIED DOCUMENT."

| | |
|---|---|
| DATE PREPARED | 12/13/2012 |
| ROUTE | 35/70 |
| STATE | MO |
| DISTRICT | KC |
| SHEET NO. | 74 |
| COUNTY | JACKSON |
| JOB NO. | J4I2371 |
| CONTRACT ID. | |
| PROJECT NO. | |
| BRIDGE NO. | |

| DATE | DESCRIPTION |
|---|---|

MISSOURI HIGHWAYS AND TRANSPORTATION COMMISSION

105 WEST CAPITOL
JEFFERSON CITY, MO 65102
1-888-ASK-MODOT (1-888-275-6636)

IF A SEAL IS PRESENT ON THIS SHEET IT HAS BEEN ELECTRONICALLY SEALED AND DATED.

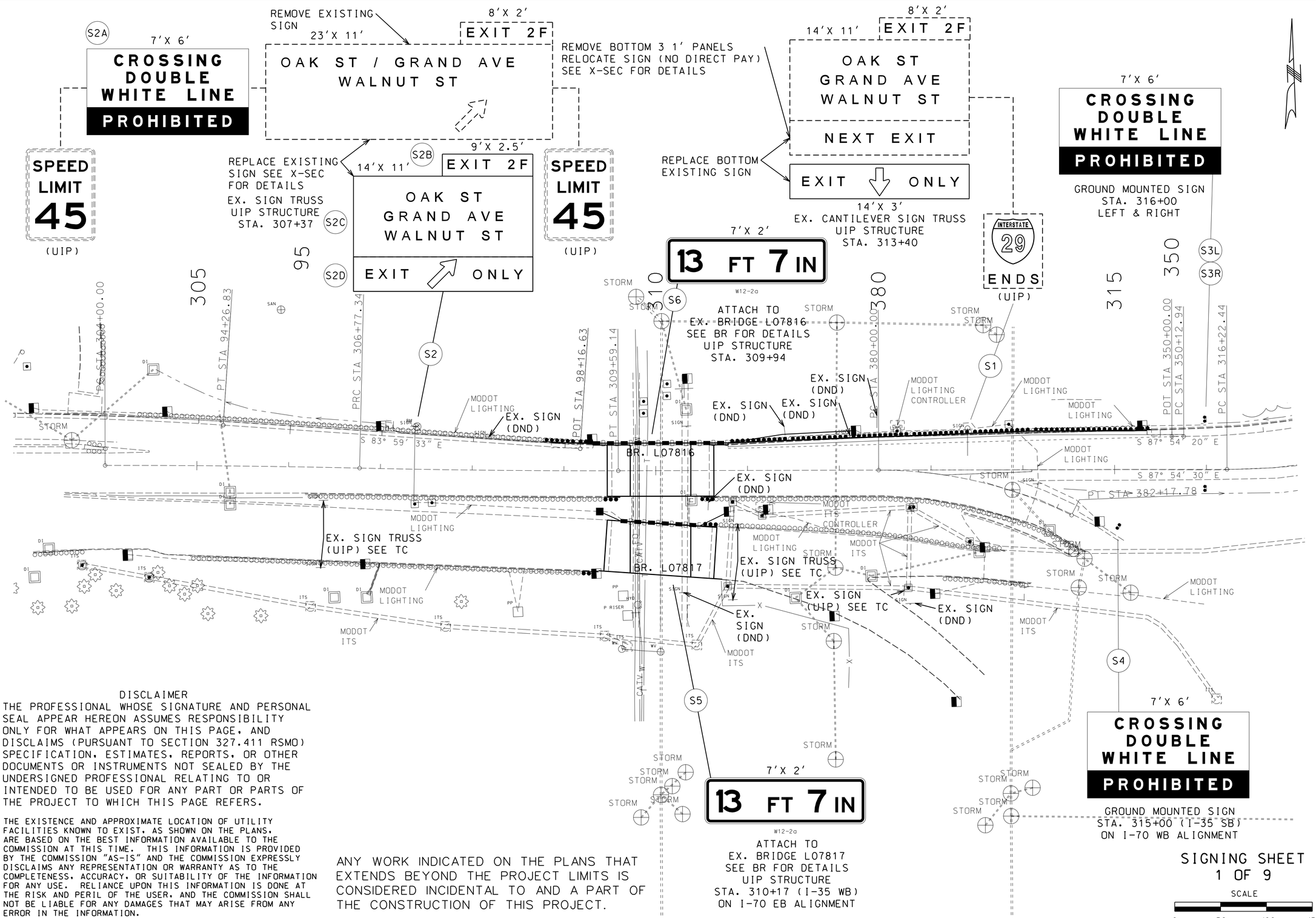


DISCLAIMER

THE PROFESSIONAL WHOSE SIGNATURE AND PERSONAL SEAL APPEAR HEREON ASSUMES RESPONSIBILITY ONLY FOR WHAT APPEARS ON THIS PAGE, AND DISCLAIMS (PURSUANT TO SECTION 327.411 RSMO) SPECIFICATION, ESTIMATES, REPORTS, OR OTHER DOCUMENTS OR INSTRUMENTS NOT SEALED BY THE UNDERSIGNED PROFESSIONAL RELATING TO OR INTENDED TO BE USED FOR ANY PART OR PARTS OF THE PROJECT TO WHICH THIS PAGE REFERS.

THE EXISTENCE AND APPROXIMATE LOCATION OF UTILITY FACILITIES KNOWN TO EXIST, AS SHOWN ON THE PLANS, ARE BASED ON THE BEST INFORMATION AVAILABLE TO THE COMMISSION AT THIS TIME. THIS INFORMATION IS PROVIDED BY THE COMMISSION "AS-IS" AND THE COMMISSION EXPRESSLY DISCLAIMS ANY REPRESENTATION OR WARRANTY AS TO THE COMPLETENESS, ACCURACY, OR SUITABILITY OF THE INFORMATION FOR ANY USE. RELIANCE UPON THIS INFORMATION IS DONE AT THE RISK AND PERIL OF THE USER, AND THE COMMISSION SHALL NOT BE LIABLE FOR ANY DAMAGES THAT MAY ARISE FROM ANY ERROR IN THE INFORMATION.

ANY WORK INDICATED ON THE PLANS THAT EXTENDS BEYOND THE PROJECT LIMITS IS CONSIDERED INCIDENTAL TO AND A PART OF THE CONSTRUCTION OF THIS PROJECT.

SIGNING SHEET
1 OF 9

SCALE
0 50 100 150

"THIS MEDIA SHOULD NOT BE CONSIDERED A CERTIFIED DOCUMENT."

| | |
|---|---|
| DATE PREPARED | 12/13/2012 |
| ROUTE | 35/70 |
| STATE | MO |
| DISTRICT | KC |
| SHEET NO. | 75 |
| COUNTY | JACKSON |
| JOB NO. | J4I2371 |
| CONTRACT ID. | |
| PROJECT NO. | |
| BRIDGE NO. | L07816, L07817 |

DESCRIPTION

DATE

MISSOURI HIGHWAYS AND TRANSPORTATION COMMISSION

105 WEST CAPITOL
JEFFERSON CITY, MO 65102
1-888-ASK-MODOT (1-888-275-6636)

IF A SEAL IS PRESENT ON THIS SHEET IT HAS BEEN ELECTRONICALLY SEALED AND DATED.

EFFECTIVE 01-01-2003

| SIGNS | | | | | PIPE POST | | | | | STRUCTURAL STEEL POSTS | | | | | | BACKING BARS 2" X 3/8" BARS @ 2.55 LBS PER LIN FT | | | | TOTAL ITEM NO. 903-12.10 | U-CHANNEL POST ITEM NO. 903-12.50 | WOOD POSTS | | | PERF. STEEL SQ. | | BREAKAWAY ASSEMBLY ITEM NO. 903-12.40 | CONC FTG'S EMBD ITEM NO. 903-10.10 | CONC FTG'S BOLT DOWN ITEM NO. 903-10.20 | HORZ CLEAR IF NOT STD | DELINEATORS, MILEPOSTS, CONDUIT, CONDUCTOR CABLE, TRENCHING AND BACKFILLING. CONTROL STATION, PULL BOXES AND OTHER REQUIRED ITEMS. |
|---|---|---|---|---|---|---|---|---|---|---|---|---|---|---|---|---|---|---|---|---|---|---|---|---|---|---|---|---|---|---|---|
| SIGN NO. | STATION | SIGN DTL. SHT. NO. | LOCATION | SIGN SIZE | PIPE SIZE | POST NO. 1 | POST NO. 2 | LBS PER FT | TOTAL ITEM NO. 903-12.20 | POST DES NO. | POST NO. 1 | POST NO. 2 | POST NO. 3 | LBS PER FT | TOTAL | NO. EACH | LGTH | TOTAL | TOTAL | | | 4"X4" ITEM NO. 903-12.60 | 4"X6" ITEM NO. 903-12.61 | 6"X6" ITEM NO. 903-12.62 | POSTS ITEM NO. 903-12.70 | ANCHOR SLEEVE ITEM NO. 903-12.71 | | | | | |
| | | | | | IN. | LIN FT | LIN FT | | LBS | | LIN FT | LIN FT | LIN FT | | LBS | | IN. | LIN FT | LBS | LBS | LIN FT | LIN FT | LIN FT | LIN FT | LIN FT | LIN FT | EACH | CU YDS | CU YDS | | |
| S1 | 313+40 | 4 | 35SB/70WB LT. | 168"X36" | OVERHEAD SIGN TRUSS - SEE D32 | | | | | SHEET FOR ADDITIONAL DETAILS | | | | | | | | | | | | | | | | | | | | | |
| S2A | 307+37 | 4 | 35SB/70WB | 84"X72" | OVERHEAD SIGN TRUSS - SEE D33 | | | | | SHEET FOR ADDITIONAL DETAILS | | | | | | | | | | | | | | | | | | | | | |
| S2B | 307+37 | 4 | 35SB/70WB | 108"X30" | OVERHEAD SIGN TRUSS - SEE D33 | | | | | SHEET FOR ADDITIONAL DETAILS | | | | | | | | | | | | | | | | | | | | | |
| S2C | 307+37 | 4 | 35SB/70WB | 168"X96" | OVERHEAD SIGN TRUSS - SEE D33 | | | | | SHEET FOR ADDITIONAL DETAILS | | | | | | | | | | | | | | | | | | | | | |
| S2D | 307+37 | 4 | 35SB/70WB | 168"X36" | OVERHEAD SIGN TRUSS - SEE D33 | | | | | SHEET FOR ADDITIONAL DETAILS | | | | | | | | | | | | | | | | | | | | | |
| S3L | 316+00 | 4 | SB35 LT. | 84"X72" | | | | | | 1 | 17 | 16.75 | | 9 | 303.8 | | | | | 303.8 | | | | | | | | | 0.29 | | |
| S3R | 316+00 | 4 | SB35 RT. | 84"X72" | | | | | | 1 | 17.25 | 17.75 | | 9 | 315.0 | | | | | 315.0 | | | | | | | | | 0.30 | | |
| S4 | 315+00 | 4 | WB70 RT. | 84"X72" | | | | | | 1 | 17.25 | 17.5 | | 9 | 312.8 | | | | | 312.8 | | | | | | | | | 0.30 | | |
| S5 | 310+17 | N/A | 35NB/EB70 | 84"X24" | ATTACHED TO BRIDGE L0781 7 - SEE BRIDGE DRAWINGS FOR ADDITIONAL DETAILS | | | | | | | | | | | | | | | | | | | | | | | | | | |
| S6 | 309+94 | NA | 35SB/WB70 | 84"X24" | ATTACHED TO BRIDGE L0781 7 - SEE BRIDGE DRAWINGS FOR ADDITIONAL DETAILS | | | | | | | | | | | | | | | | | | | | | | | | | | |
| TOTAL | | | | | | | | | 0 | | | | | | 931.6 | | | | 0 | 930 | 0 | 0 | 0 | 0 | 0 | 0 | 0 | 0 | 0.9 | | |

"THIS MEDIA SHOULD NOT BE CONSIDERED A CERTIFIED DOCUMENT."

DATE PREPARED 12/13/2012

ROUTE 35/70 | STATE MO

DISTRICT KC | SHEET NO. 76

COUNTY JACKSON

JOB NO. J4I2371

CONTRACT ID.

PROJECT NO.

BRIDGE NO.

DESCRIPTION

DATE

MISSOURI HIGHWAYS AND TRANSPORTATION COMMISSION

105 WEST CAPITOL
JEFFERSON CITY, MO 65102
1-888-ASK-MODOT (1-888-275-6636)

IF A SEAL IS PRESENT ON THIS SHEET IT HAS BEEN ELECTRONICALLY SEALED AND DATED.

SIGNING
SHEET 2 OF 9

EFFECTIVE 07-01-2010

## STANDARD SIGN ASSEMBLIES

| SIGN NUMBER | STATION | LOCATION | TYPE: SIGN DESCRIPTION, SIZES & NUMBER OF EACH | | | | | | | | | | | | | | | |
|---|---|---|---|---|---|---|---|---|---|---|---|---|---|---|---|---|---|---|
| | | | W12-2a 84"X24" | | | | | | | | | | | | | | | |
| S5 | 310+17 | 35NB/70EB | 1 | | | | | | | | | | | | | | | |
| S6 | 309+94 | 35SB/70WB | 1 | | | | | | | | | | | | | | | |

## SIGN SUMMARY

| STANDARD SIGN OR SPECIAL SIGN NUMBER | SIGN DETAIL SHEET NO. | NO. EACH | SIZE, TYPE & SQUARE FEET: SIZE | SHR2L-1 ITEM NO. 903-50.04 | STR2L-1 ITEM NO. 903-50.64 | SHR2L-3 ITEM NO. 903-50.65 | STR2L-3 ITEM NO. 903-50.11 | SHR4L-1 ITEM NO. 903-50.69 | STR4L-1 ITEM NO. 903-50.71 | SHR4L-3 ITEM NO. 903-50.70 | STR4L-3 ITEM NO. 903-50.72 | 48" STOP EACH | 36" STOP EACH |
|---|---|---|---|---|---|---|---|---|---|---|---|---|---|
| S5/S6 | | 2 | 84"X24" | | | | | 28.0 | | | | | |
| S1 | | 1 | 168"X36" | | | | | | 42.0 | | | | |
| S2B | | 1 | 108"X30" | | | | 22.5 | | | | | | |
| S2C | | 1 | 168"X96" | | | | 112.0 | | | | | | |
| S2D | | 1 | 168"X36" | | | | | | 42.0 | | | | |
| S2A/S3L/S3R/S4 | | 4 | 84"X72" | | | | 168.0 | | | | | | |
| | | | TOTAL | | | | 303 | 28 | 84 | | | | |

SIGNING
SHEET 3 OF 9

D-30

"THIS MEDIA SHOULD NOT BE CONSIDERED A CERTIFIED DOCUMENT."

DATE PREPARED 12/13/2012

ROUTE 35/70 | STATE MO

DISTRICT KC | SHEET NO. 77

COUNTY JACKSON

JOB NO. J4I2371

CONTRACT ID.

PROJECT NO.

BRIDGE NO.

| DATE | DESCRIPTION |
|---|---|
| | |

IF A SEAL IS PRESENT ON THIS SHEET IT HAS BEEN ELECTRONICALLY SEALED AND DATED.

MISSOURI HIGHWAYS AND TRANSPORTATION COMMISSION
105 WEST CAPITOL
JEFFERSON CITY, MO 65102
1-888-ASK-MODOT (1-888-275-6636)

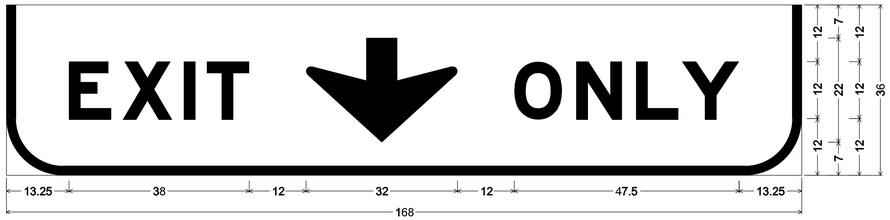


STR4L1; 12.000" Radius, 2.000" Border, Black on Yellow;
[EXIT] E Mod; Down Arrow 22.000" 270°; [ONLY] E Mod;
Table of letter and object lefts.

| | | | | | | | | |
|---|---|---|---|---|---|---|---|---|
| E | X | I | T | ↓ | O | N | L | Y |
| 13.250 | 24.625 | 37.500 | 42.375 | 63.250 | 107.250 | 120.375 | 133.000 | 142.750 |

E1-5P STR2L3; 6.000" Radius, 2.000" Border, White on Green;
[EXIT] E Mod; [2 F] E Mod;
E1-1 STR2L3; 12.000" Radius, 2.000" Border, White on Green;
[Oak St] E Mod; [Grand Ave] E Mod; [Walnut St] E Mod;
STR4L1; 12.000" Radius, 2.000" Border, Black on Yellow;
[EXIT] E Mod; Arrow 160 - 35.000" 45°; [ONLY] E Mod;
Table of letter and object lefts.

| | | | | | |
|---|---|---|---|---|---|
| E | X | I | T | 2 | F |
| 15.125 | 24.625 | 35.375 | 39.375 | 61.750 | 81.750 |

| | | | | |
|---|---|---|---|---|
| O | a | k | S | t |
| 42.000 | 59.500 | 75.750 | 101.875 | 118.000 |

| | | | | | | | |
|---|---|---|---|---|---|---|---|
| G | r | a | n | d | A | v | e |
| 19.250 | 37.250 | 47.375 | 63.625 | 78.750 | 105.000 | 123.500 | 138.625 |

| | | | | | | | |
|---|---|---|---|---|---|---|---|
| W | a | l | n | u | t | S | t |
| 21.375 | 42.000 | 58.250 | 67.375 | 83.750 | 98.500 | 122.500 | 138.625 |

| | | | | | | | | |
|---|---|---|---|---|---|---|---|---|
| E | X | I | T | ↗ | O | N | L | Y |
| 15.500 | 26.875 | 39.750 | 44.625 | 65.500 | 105.000 | 118.125 | 130.750 | 140.500 |

| | |
|---|---|
| SIGN NO. | S1 |
| STATION | 313+40 |
| ROADWAY | 35SB/70WB |

| | |
|---|---|
| SIGN NO. | S2B |
| STATION | 307+37 |
| ROADWAY | 35SB/70WB |
| SIGN NO. | S2C |
| STATION | 307+37 |
| ROADWAY | 35SB/70WB |
| SIGN NO. | S2D |
| STATION | 307+37 |
| ROADWAY | 35SB/70WB |

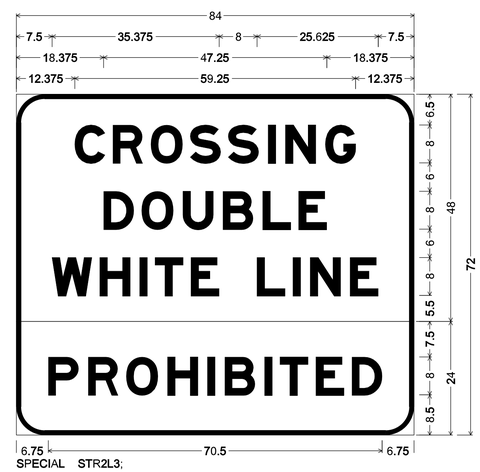


SPECIAL STR2L3;
6.000" Radius, 1.000" Border, Black on White;
[CROSSING] E Mod; [DOUBLE] E Mod; [WHITE LINE] E Mod;
6.000" Radius, 1.000" Border, Black on Red;
[PROHIBITED] White E Mod;
Table of letter and object lefts.

| | | | | | | | |
|---|---|---|---|---|---|---|---|
| C | R | O | S | S | I | N | G |
| 12.375 | 20.375 | 28.375 | 36.750 | 44.750 | 53.250 | 56.875 | 65.250 |

| | | | | | |
|---|---|---|---|---|---|
| D | O | U | B | L | E |
| 18.375 | 26.500 | 35.250 | 43.625 | 52.000 | 59.625 |

| | | | | | | | | | |
|---|---|---|---|---|---|---|---|---|---|
| W | H | I | T | E | L | I | N | E | |
| 7.500 | 17.625 | 26.125 | 29.375 | 36.875 | 50.875 | 58.375 | 62.125 | 70.500 | |

| | | | | | | | | | |
|---|---|---|---|---|---|---|---|---|---|
| P | R | O | H | I | B | I | T | E | D |
| 6.750 | 15.125 | 23.250 | 32.000 | 40.375 | 44.000 | 52.500 | 55.750 | 63.250 | 70.875 |

| | |
|---|---|
| SIGN NO. | S2A |
| STATION | 307+37 |
| ROADWAY | 35SB/70WB |
| SIGN NO. | S3L |
| STATION | 316+00 |
| ROADWAY | 35SB |
| SIGN NO. | S3R |
| STATION | 316+00 |
| ROADWAY | 35SB |
| SIGN NO. | S4 |
| STATION | 315+00 |
| ROADWAY | 70WB |

SIGNING
SHEET 4 OF 9

D-31

"THIS MEDIA SHOULD NOT BE CONSIDERED A CERTIFIED DOCUMENT."

| | |
|---|---|
| DATE PREPARED | 12/13/2012 |
| ROUTE | 35/70 |
| STATE | MO |
| DISTRICT | KC |
| SHEET NO. | 78 |
| COUNTY | JACKSON |
| JOB NO. | J4I2371 |
| CONTRACT ID. | |
| PROJECT NO. | |
| BRIDGE NO. | |

| DATE | DESCRIPTION |
|---|---|
| | |

MISSOURI HIGHWAYS AND TRANSPORTATION COMMISSION
105 WEST CAPITOL
JEFFERSON CITY, MO 65102
1-888-ASK-MODOT (1-888-275-6636)

IF A SEAL IS PRESENT ON THIS SHEET IT HAS BEEN ELECTRONICALLY SEALED AND DATED.

REV.

EFFECTIVE 10-01-2005

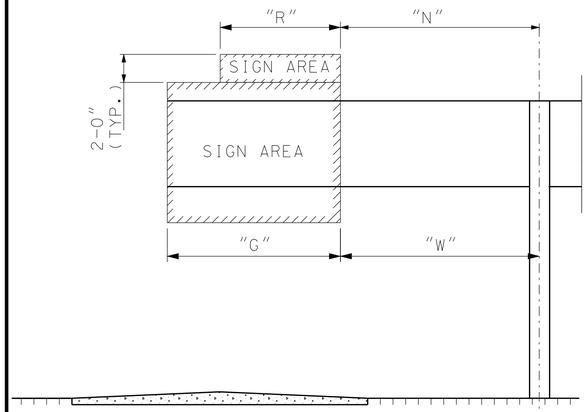


ELEVATION

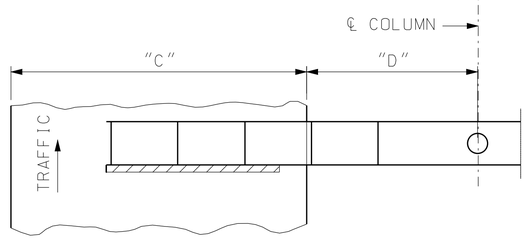


PLAN
CANTILEVER OVERHEAD SIGN TRUSS

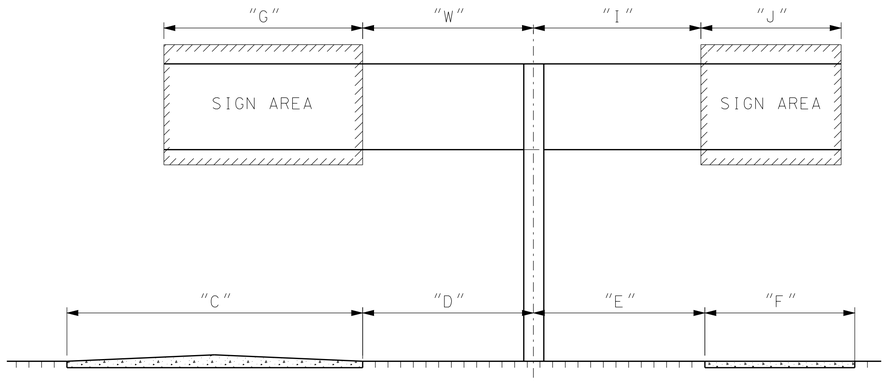


ELEVATION

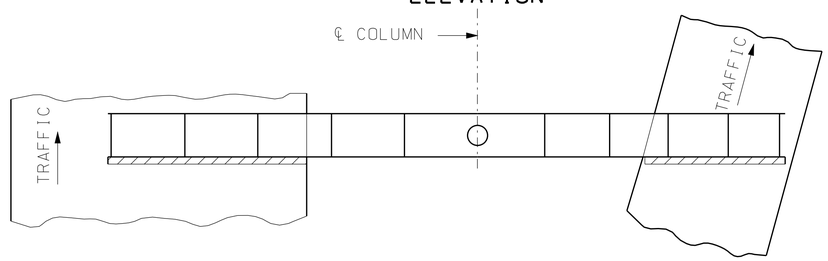


PLAN
BUTTERFLY OVERHEAD SIGN TRUSS

GENERAL NOTES:

DESIGN SPECIFICATIONS: AASHTO STANDARD SPECIFICATIONS FOR STRUCTURAL SUPPORTS FOR HIGHWAY SIGNS. LUMINAIRES AND TRAFFIC SIGNALS - 2001 AND LATEST INTERIM.

STRUCTURAL CARBON STEEL (ASTM A709 GRADE 36) fy = 36,000 psi.

REINFORCING STEEL (GRADE 60) fY = 60,000 psi.

CLASS B CONCRETE f'c = 3,000 psi.

MINIMUM CLEARANCE: VERTICAL ROADWAY CLEARANCE = 17'-6".

MINIMUM CLEARANCE TO REINFORCING SHALL BE 3", UNLESS OTHERWISE SHOWN.

TRUSS SHALL BE ALL WELDED CONSTRUCTION. ALL WELDING TO BE CONTINUOUS UNLESS OTHERWISE SHOWN.

QUALIFICATION OF WELDING OPERATORS WILL BE REQUIRED.

STRUCTURAL STEEL WELDING AND WELDER QUALIFICATION SHALL BE PERFORMED IN ACCORDANCE WITH THE A.W.S. D1.5 BRIDGE WELDING CODE AS AMMENDED BY THE MISSOURI HIGHWAY AND TRANSPORTATION COMMISSION STANDARD SPECIFICATIONS AND SPECIAL PROVISIONS ON STRUCTURAL STEEL CONSTRUCTION.

ALUMINUM WELDING AND WELDER QUALIFICATION SHALL BE PERFORMED IN ACCORDANCE WITH THE CURRENT EDITION OF A.W.S. D1.2 STRUCTURAL WELDING CODE - ALUMINUM, EXCEPT AS AMENDED BY SECTION 903 OF THE MISSOURI HIGHWAY AND TRANSPORTATION COMMISSION STANDARD SPECIFICATIONS FOR HIGHWAY CONSTRUCTION.

ALL ALUMINUM FILLET WELDS SHALL BE $\frac{3}{16}$" UNLESS OTHERWISE SHOWN.

COATING: ALL COLUMNS SHALL BE GALVANIZED AS PER AASHTO M 111. ALL STRUCTURAL STEEL (EXCEPT THE COLUMNS) SHALL BE CLEANED AND COATED WITH SYSTEM G IN ACCORDANCE WITH STANDARD SPECIFICATIONS, SECTION 1081 AND 903 COLOR OF THE FINISHED COAT SHALL BE GRAY.

PAYMENT FOR GALVANIZING, CLEANING AND COATING SHALL BE INCLUDED IN THE CONTRACT UNIT PRICE PER SIGN TRUSS. ALL THE STRUCTURAL STEEL MAY BE GALVANIZED IN LIEU OF COATING. PORTIONS OF THE STEEL MAY BE GALVANIZED WITH THE APPROVAL OF THE ENGINEER.

PERMITS MUST BE OBTAINED FOR ALL TRUCK LOADS OVER LEGAL LENGTH.

OVERHEAD SIGN DIMENSIONS

| SIGN NO. | STATION NUMBER | TYPE SIGN | | COL. H | COL. TYPE | ROADWAY DESCRIPTION | | | | SIGN SPACING | | | | | | | | CONCRETE FOOTINGS (CU. YD.) |
|---|---|---|---|---|---|---|---|---|---|---|---|---|---|---|---|---|---|---|
| | | CANT. | BUTTER FLY | | | "C" | "D" | "E" | "F" | "G" | Ht. | "W" | "I" | "J" | Ht. | "R" | "N" | |
| S-1 | 313+40 | 30'0" | | EXISTING | | 36'0" | 11'11" | | | 14'0" | 13'0" | 10'11" | | | | 8'0" | 10'11" | EXISTING |

# BUTTERFLY AND CANTILEVER OVERHEAD SIGN TRUSSES

STRUCTURAL STEEL

SIGNING SHEET
5 OF 9

DATA SHEET
(SEE STANDARD 903.12)

D-32

"THIS MEDIA SHOULD NOT BE CONSIDERED A CERTIFIED DOCUMENT."

| DATE PREPARED | |
|---|---|
| 12/13/2012 | |
| ROUTE 35/70 | STATE MO |
| DISTRICT KC | SHEET NO. 79 |
| COUNTY JACKSON | |
| JOB NO. J4I2371 | |
| CONTRACT ID. | |
| PROJECT NO. | |
| BRIDGE NO. | |

| DATE | DESCRIPTION |
|---|---|
| | |

MISSOURI HIGHWAYS AND TRANSPORTATION COMMISSION

105 WEST CAPITOL
JEFFERSON CITY, MO 65102
1-888-ASK-MODOT (1-888-275-6636)

IF A SEAL IS PRESENT ON THIS SHEET IT HAS BEEN ELECTRONICALLY SEALED AND DATED.

EFFECTIVE 04-01-1999

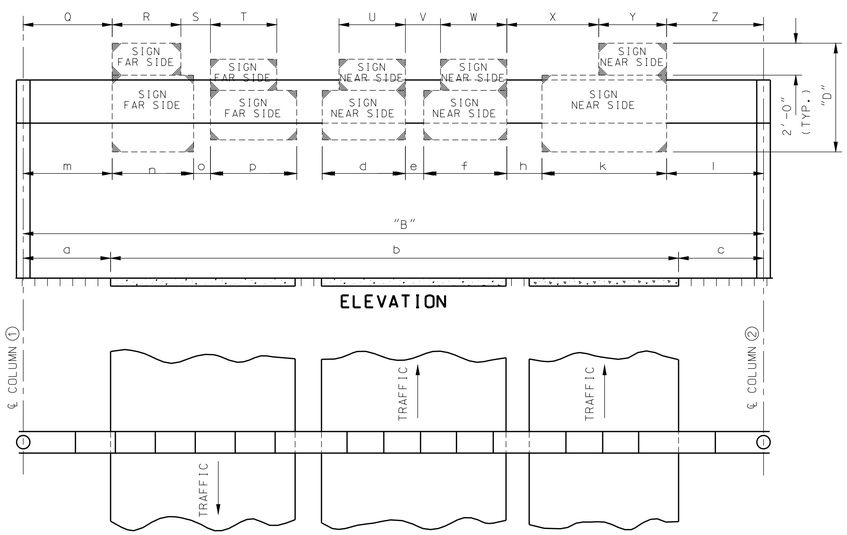


PLAN

DIMENSIONS
TYPE 'B' SIGN BRIDGE

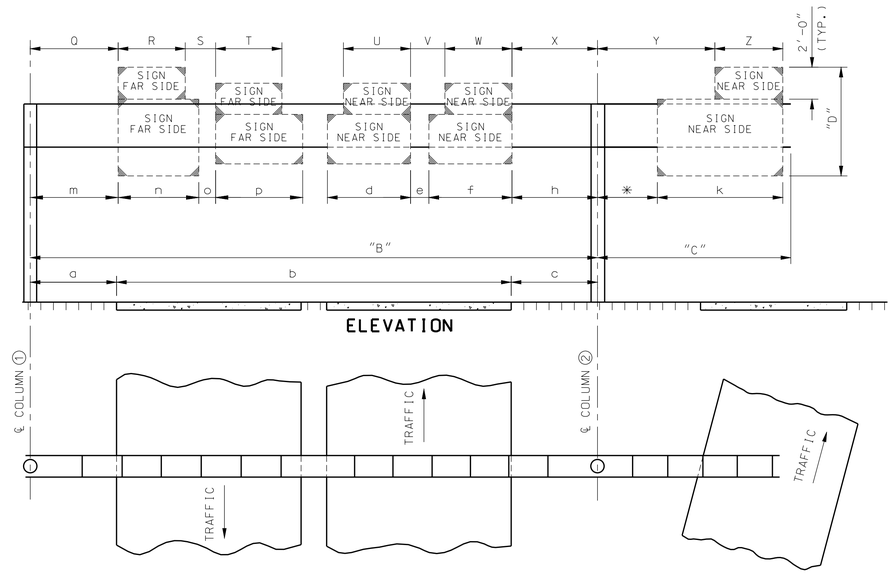


PLAN

DIMENSIONS
TYPE 'BC' SIGN BRIDGE

NOTE: ABOVE MINIMUMS ARE RECOMMENDED DIMENSIONS.

✳ MINIMUM = 6'-0" WHEN ALUMINUM IS USED.

## SIGN BRIDGE DIMENSIONS

| SIGN NO. | STATION NUMBER | TRUSS DESCRIPTION | | | | | ROADWAY DESCRIPTION | | | "D" | SIGN SPACING | | | | | | | | | | | | | | | COLUMN DATA | | | | |
|---|---|---|---|---|---|---|---|---|---|---|---|---|---|---|---|---|---|---|---|---|---|---|---|---|---|---|---|---|---|---|
| | | | | | CHORD | | | | | | NEAR SIDE | | | | | | | | FAR SIDE | | | | | | | COLUMN 1 | | COLUMN 2 | | CONCRETE FOOTINGS (CU. YD.) |
| | | Type | "B" | "C" | ALUM. | STEEL | a | b | c | | d | Ht. | e | f | Ht. | h | k | Ht. | l | m | n | Ht. | o | p | Ht. | H | TYPE | H | TYPE | |
| S-2 | 307+37 | B | 84'0" | | EXISTING | | 12'0" | 53'2" | 18'9" | 13'6" | 7'0" | 6'0" | 3'2" | 14'0" | 13'6" | 18'9" | | | | | | | | | | EXISTING | | EXISTING | | EXISTING |

## SIGN BRIDGE DIMENSIONS

| SIGN NO. | STATION NUMBER | TRUSS DESCRIPTION | | | | | ROADWAY DESCRIPTION | | | "D" | SIGN SPACING | | | | | | | | | | | |
|---|---|---|---|---|---|---|---|---|---|---|---|---|---|---|---|---|---|---|---|---|---|---|
| | | | | | CHORD | | | | | | NEAR SIDE | | | | | | | FAR SIDE | | | | |
| | | Type | "B" | "C" | ALUM. | STEEL | a | b | c | | U | V | W | X | Y | Z | | Q | R | S | T | |
| S-2 | 307+37 | B | 84'0" | | EXISTING | | 12'0" | 53'2" | 18'9" | 13'6" | | | 9'0" | 18'9" | | | | | | | | |

## OVERHEAD SIGN TRUSSES
### STRUCTURAL STEEL OR ALUMINUM

DATA SHEET
(SEE STANDARD 903.10 OR 903.60)

## GENERAL NOTES

DESIGN SPECIFICATIONS: AASHTO STANDARD SPECIFICATIONS FOR STRUCTURAL SUPPORTS FOR HIGHWAY SIGNS, LUMINAIRES AND TRAFFIC SIGNALS - 1985 AND LATEST INTERIM.

BASIC ASSUMPTIONS: WIND VELOCITY = 70 mph, WIND PRESSURE ON SIGN AREA = 27 psf, ICE LOAD = 3 psf.

STRUCTURAL ALUMINUM STRESS = 10,000 psi.

STRUCTURAL CARBON STEEL (ASTM A709 GRADE 36) fs = 20,000 psi.

REINFORCING STEEL (GRADE 40) fs= 20,000 psi.

CLASS B CONCRETE fc = 1,200 psi.

ALLOWABLE SOIL PRESSURE = 2,750 psf.

ALLOWABLE UNIT STRESSES DUE TO WIND LOAD OR WIND LOAD IN COMBINATION WITH OTHER FORCES ARE INCREASED 40%.

MINIMUM CLEARANCE: VERTICAL ROADWAY CLEARANCE = 17'-6".

MINIMUM CLEARANCE TO REINFORCING SHALL BE 2", UNLESS OTHERWISE SHOWN.

TRUSS SHALL BE ALL WELDED CONSTRUCTION. ALL WELDING TO BE CONTINUOUS UNLESS OTHERWISE SHOWN.

QUALIFICATION OF WELDING OPERATORS WILL BE REQUIRED.

STRUCTURAL STEEL WELDING AND WELDER QUALIFICATION SHALL BE PERFORMED IN ACCORDANCE WITH THE A.W.S. D1.2 BRIDGE WELDING CODE AS AMENDED BY THE MISSOURI HIGHWAY AND TRANSPORTATION COMMISSION STANDARD SPECIFICATIONS AND SPECIAL PROVISIONS ON STRUCTURAL STEEL CONSTRUCTION.

ALUMINUM WELDING AND WELDER QUALIFICATION SHALL BE PERFORMED IN ACCORDANCE WITH THE CURRENT EDITION OF A.W.S. D1.2 STRUCTURAL WELDING CODE - ALUMINUM, EXCEPT AS AMENDED BY SECTION 903 OF THE MISSOURI HIGHWAY AND TRANSPORTATION COMMISSION STANDARD SPECIFICATIONS FOR HIGHWAY CONSTRUCTION.

ALL ALUMINUM FILLET WELDS SHALL BE $\frac{3}{16}$" UNLESS OTHERWISE SHOWN.

COATING: ALL COLUMNS SHALL BE GALVANIZED AS PER AASHTO M 111. ALL STRUCTURAL STEEL (EXCEPT THE COLUMNS) SHALL BE CLEANED AND COATED WITH SYSTEM G IN ACCORDANCE WITH STANDARD SPECIFICATIONS, SECTIONS 712.12 AND 903.3.4. COLOR OF THE FINISHED COAT SHALL BE GRAY.

PAYMENT FOR GALVANIZING, CLEANING AND COATING SHALL BE INCLUDED IN THE CONTRACT UNIT PRICE PER SIGN TRUSS. ALL THE STRUCTURAL STEEL MAY BE GALVANIZED IN LIEU OF COATING PORTIONS OF THE STEEL MAY BE GALVANIZED WITH THE APPROVAL OF THE ENGINEER.

PERMITS MUST BE OBTAINED FOR ALL TRUCK LOADS OVER LEGAL LENGTH.

SIGNING SHEET
6 OF 9



"THIS MEDIA SHOULD NOT BE CONSIDERED A CERTIFIED DOCUMENT."

| DATE PREPARED | |
|---|---|
| 12/13/2012 | |
| ROUTE 35/70 | STATE MO |
| DISTRICT KC | SHEET NO. 80 |
| COUNTY JACKSON | |
| JOB NO. J4I2371 | |
| CONTRACT ID. | |
| PROJECT NO. | |
| BRIDGE NO. | |

| DATE | DESCRIPTION |
|---|---|
| | |

MISSOURI HIGHWAYS AND TRANSPORTATION COMMISSION
105 WEST CAPITOL
JEFFERSON CITY, MO 65102
1-888-ASK-MODOT (1-888-275-6636)

IF A SEAL IS PRESENT ON THIS SHEET IT HAS BEEN ELECTRONICALLY SEALED AND DATED.

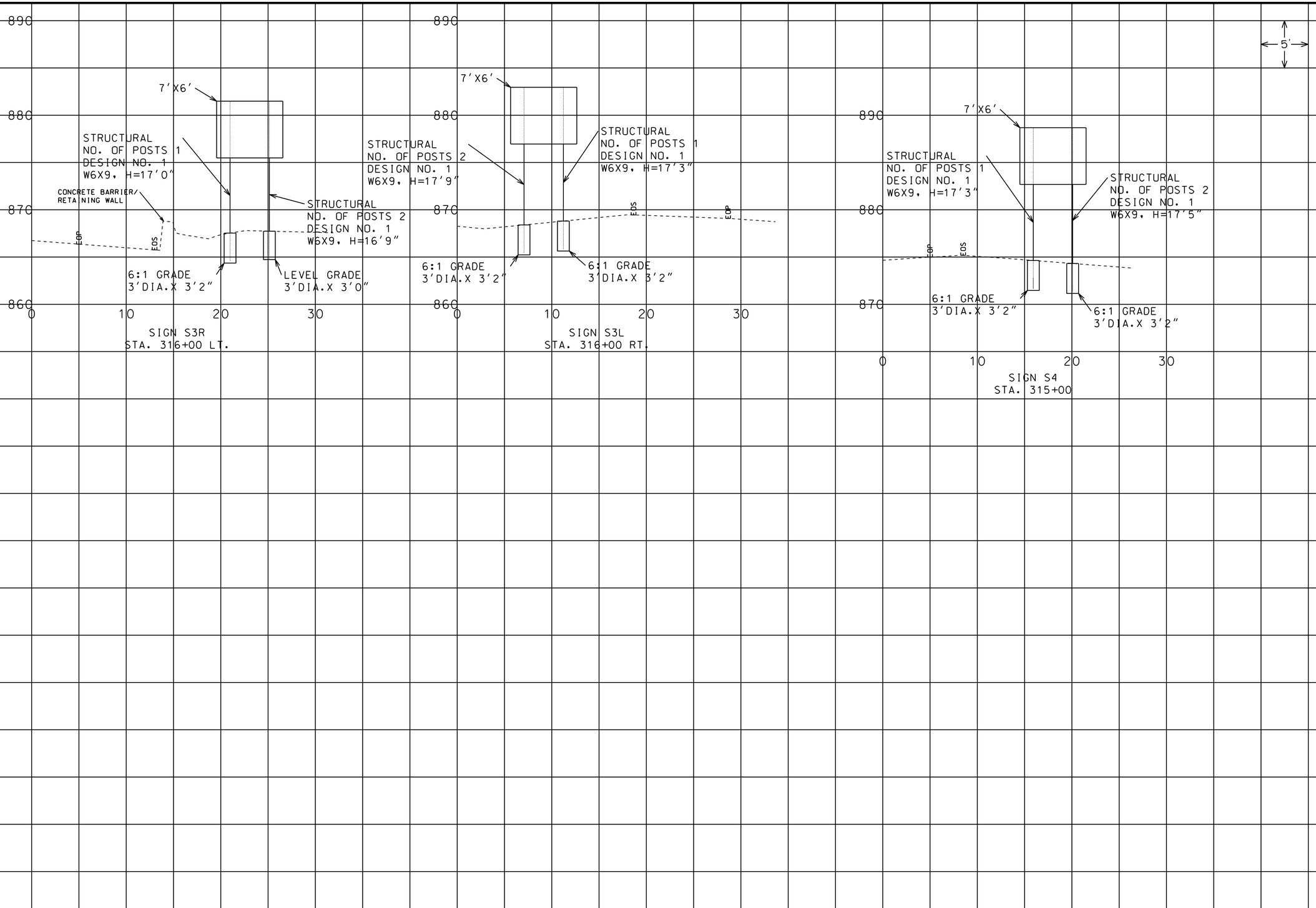


"THIS MEDIA SHOULD NOT BE CONSIDERED A CERTIFIED DOCUMENT."

| | |
|---|---|
| DATE PREPARED | 12/13/2012 |
| ROUTE | 35/70 |
| STATE | MO |
| DISTRICT | KC |
| SHEET NO. | 81 |
| COUNTY | JACKSON |
| JOB NO. | J4I2371 |
| CONTRACT ID. | |
| PROJECT NO. | |
| BRIDGE NO. | |

DESCRIPTION

DATE

MISSOURI HIGHWAYS AND TRANSPORTATION COMMISSION

105 WEST CAPITOL
JEFFERSON CITY, MO 65102
1-888-ASK-MODOT (1-888-275-6636)

IF A SEAL IS PRESENT ON THIS SHEET IT HAS BEEN ELECTRONICALLY SEALED AND DATED.

SIGNING SHEET
7 OF 9

REV.

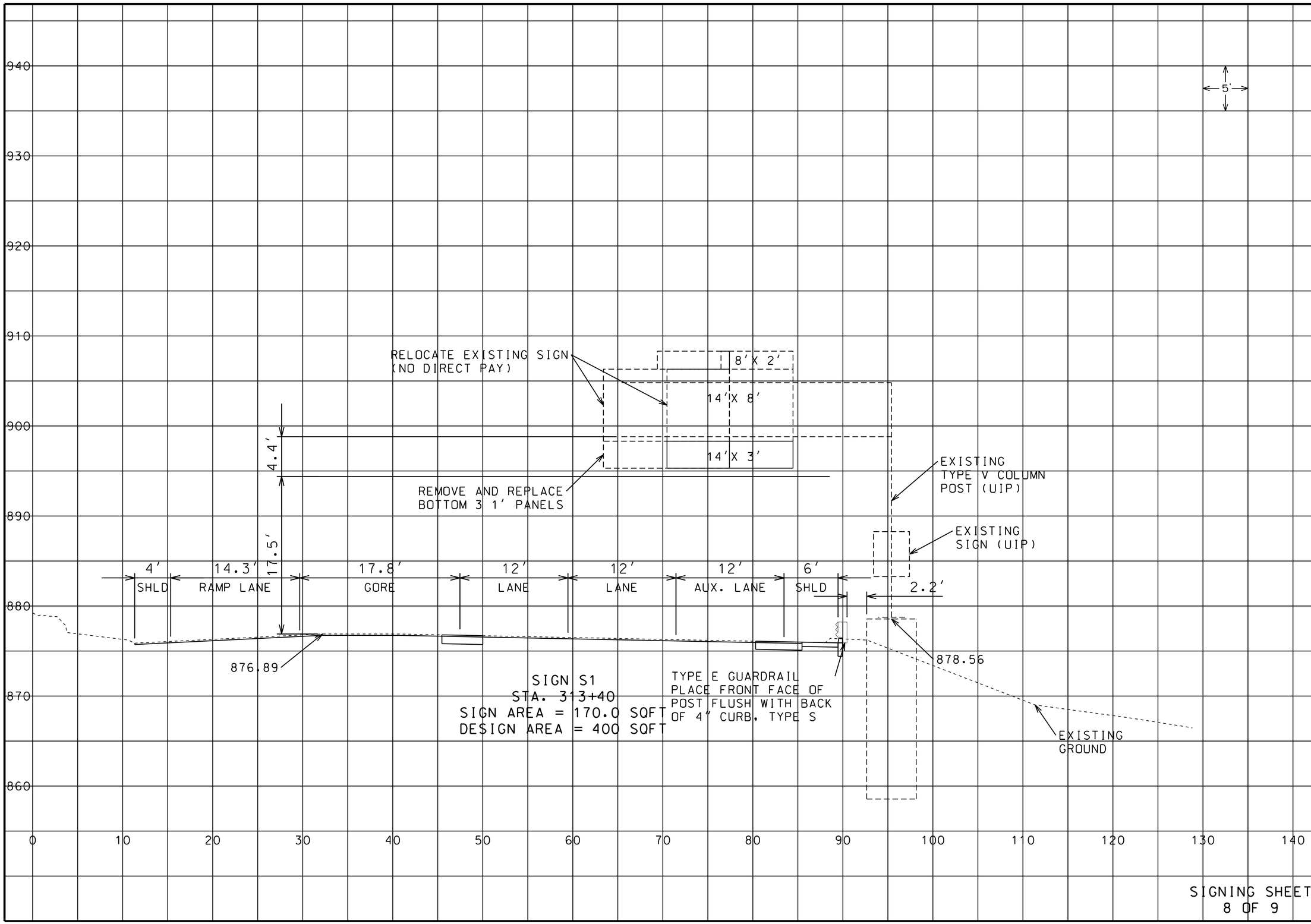


SIGNING SHEET
8 OF 9

"THIS MEDIA SHOULD NOT BE CONSIDERED A CERTIFIED DOCUMENT."

| | |
|---|---|
| DATE PREPARED | 12/13/2012 |
| ROUTE | 35/70 |
| STATE | MO |
| DISTRICT | KC |
| SHEET NO. | 82 |
| COUNTY | JACKSON |
| JOB NO. | J4I2371 |
| CONTRACT ID. | |
| PROJECT NO. | |
| BRIDGE NO. | |

| DATE | DESCRIPTION |
|---|---|
| | |

MISSOURI HIGHWAYS AND TRANSPORTATION COMMISSION

105 WEST CAPITOL
JEFFERSON CITY, MO 65102
1-888-ASK-MODOT (1-888-275-6636)

IF A SEAL IS PRESENT ON THIS SHEET IT HAS BEEN ELECTRONICALLY SEALED AND DATED.

REV.

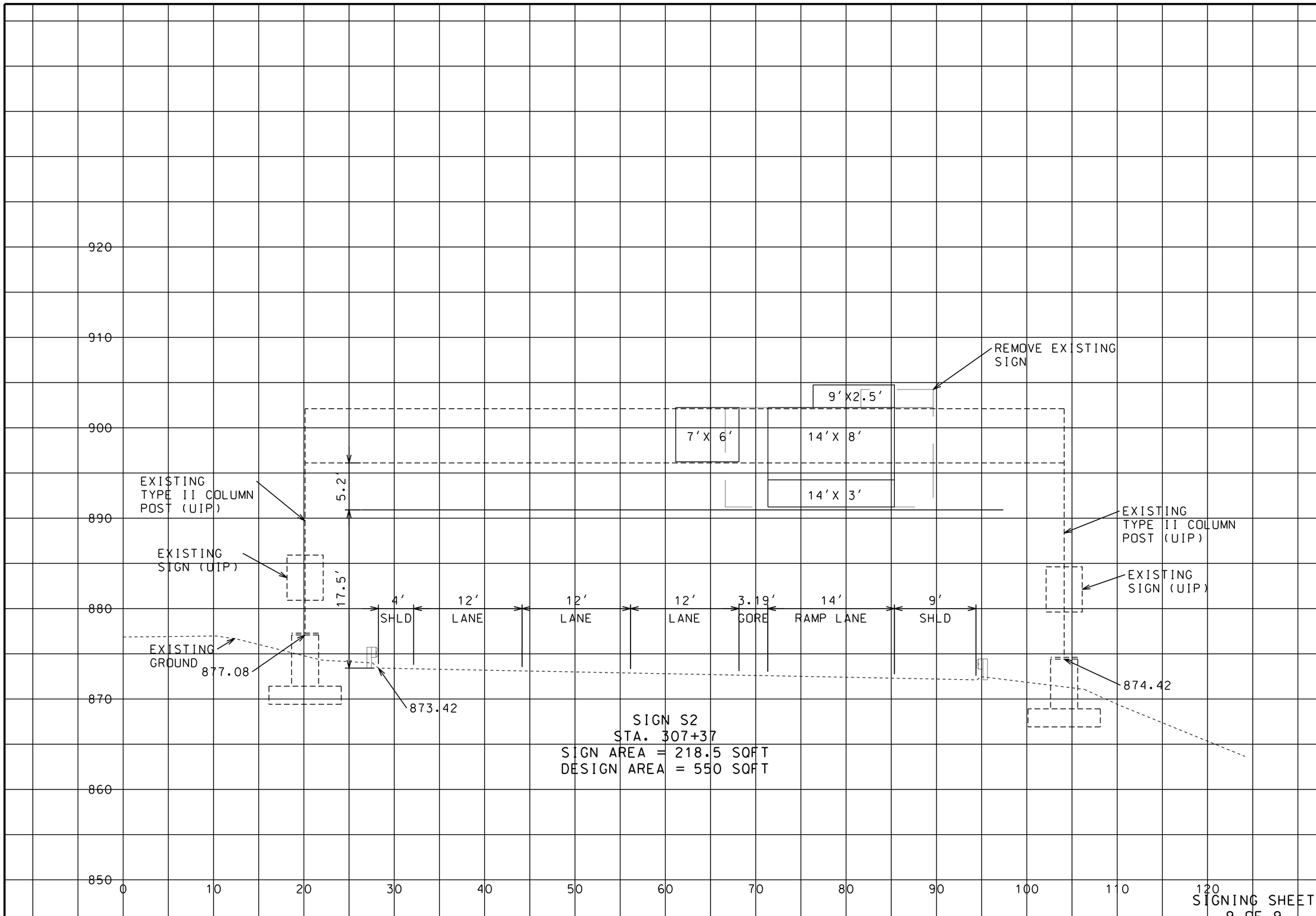


SIGNING SHEET
9 OF 9

"THIS MEDIA SHOULD NOT BE CONSIDERED A CERTIFIED DOCUMENT."

| | |
|---|---|
| DATE PREPARED | 12/13/2012 |
| ROUTE | 35/70 |
| STATE | MO |
| DISTRICT | KC |
| SHEET NO. | 83 |
| COUNTY | JACKSON |
| JOB NO. | J4I2371 |
| CONTRACT ID. | |
| PROJECT NO. | |
| BRIDGE NO. | |

| DESCRIPTION | DATE |
|---|---|
| | |

MISSOURI HIGHWAYS AND TRANSPORTATION COMMISSION

105 WEST CAPITOL
JEFFERSON CITY, MO 65102
1-888-ASK-MODOT (1-888-275-6636)

IF A SEAL IS PRESENT ON THIS SHEET IT HAS BEEN ELECTRONICALLY SEALED AND DATED.

REV.

PAVEMENT MARKING LEGEND

S.Y. - SOLID YELLOW ACRLYIC WATERBORNE PAINT
S.W. - SOLID WHITE ACRYLIC WATERBORNE PAINT
D.S.W.- DOUBLE SOLID WHITE WET REFLECTIVE EPOXY PAINT
I.W. - INTERMITTENT WHITE WET REFLECTIVE EPOXY PAINT
D.W. - DOTTED WHITE WET REFLECTIVE EXPOXY PAINT
(3 FT. LANE LINE W/ 9 FT. GAP)

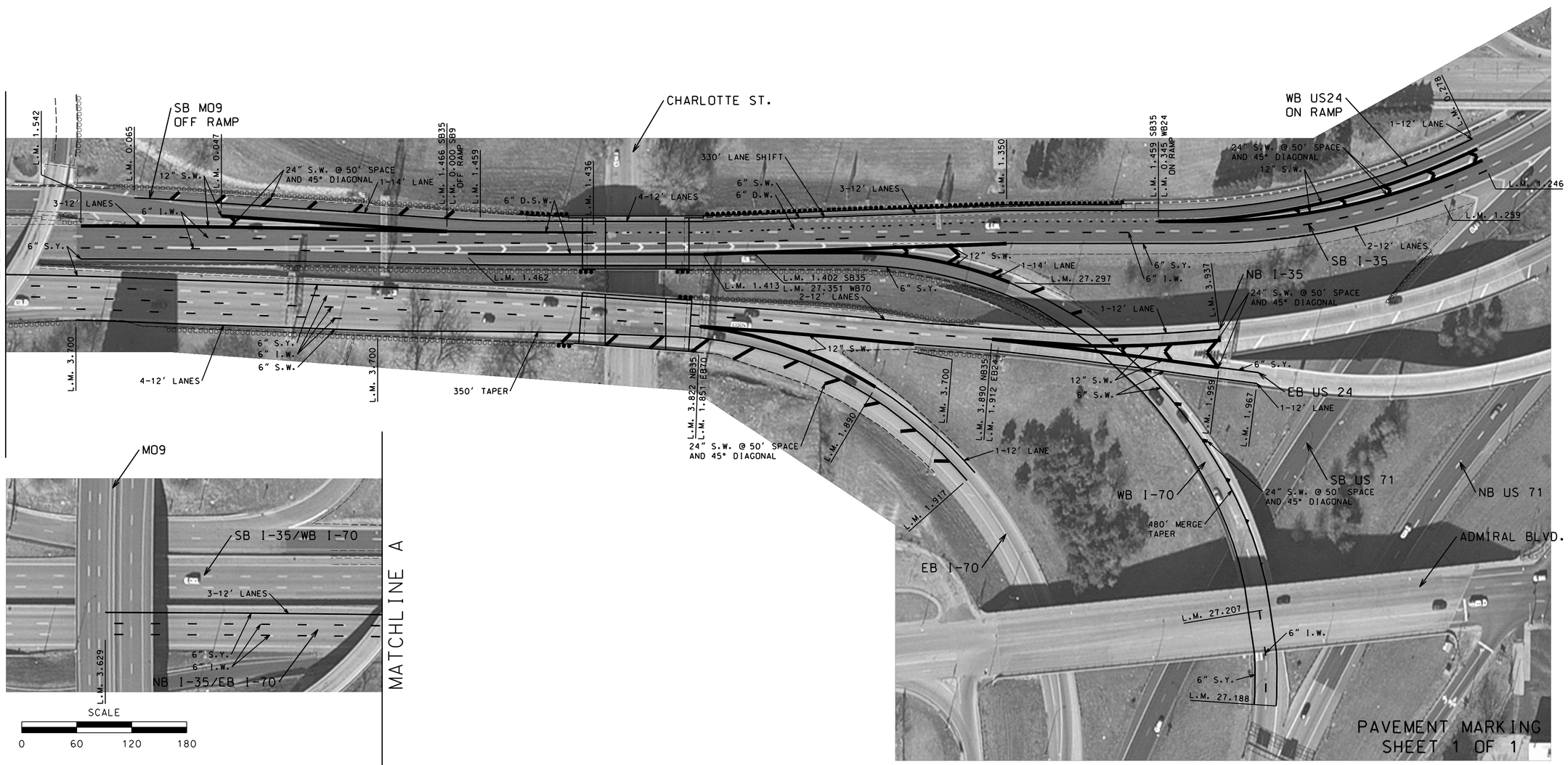


"THIS MEDIA SHOULD NOT BE CONSIDERED A CERTIFIED DOCUMENT."

| | |
|---|---|
| DATE PREPARED | 12/13/2012 |
| ROUTE | 35/70 |
| STATE | MO |
| DISTRICT | KC |
| SHEET NO. | 84 |
| COUNTY | JACKSON |
| JOB NO. | J4I2371 |
| CONTRACT ID. | |
| PROJECT NO. | |
| BRIDGE NO. | |

| DATE | DESCRIPTION |
|---|---|
| | |

MISSOURI HIGHWAYS AND TRANSPORTATION COMMISSION
105 WEST CAPITOL
JEFFERSON CITY, MO 65102
1-888-ASK-MODOT (1-888-275-6636)

IF A SEAL IS PRESENT ON THIS SHEET IT HAS BEEN ELECTRONICALLY SEALED AND DATED.

# MISSOURI HIGHWAYS AND TRANSPORTATION COMMISSION

SEC/SUR 32 TWP 50N RGE 33W

## U.I.P & REDECK EXISTING (63') SIMPLE COMPOSITE WIDE FLANGE BEAM SPAN

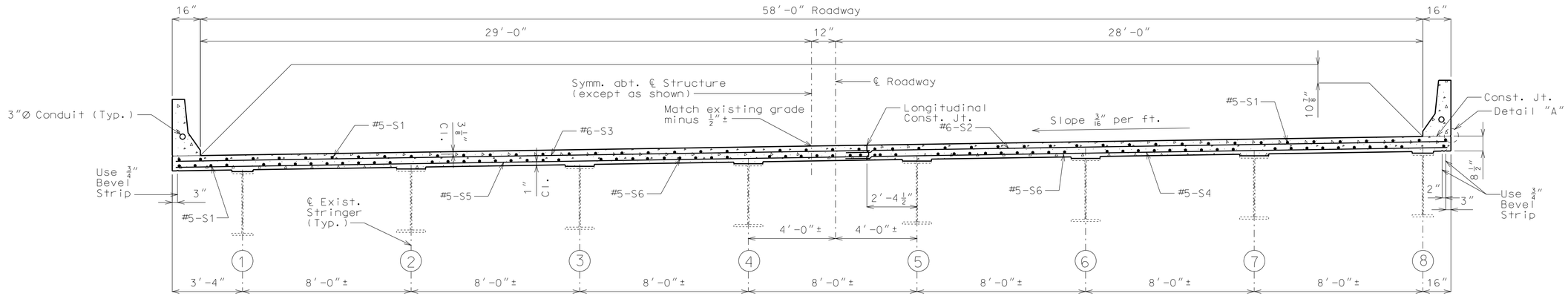


TYPICAL SECTION THRU SLAB

## General Notes:

**Design Specifications:**

2002 - AASHTO 17th Edition
Load Factor Design
Seismic Performance Category A

**Design Loading:**

HS20 Modified (New Construction)
35#/sq. ft. Future Wearing Surface
Earth - 120#/cu. ft.. Equivalent Fluid Pressure 45#/cu. ft.
Fatigue Stress - Case I

**Design Unit Stresses:**

Class B-1 Concrete (Safety Barrier Curb) f'c = 4,000 psi
Class B-2 Concrete (Slab on Wing Wall & Superstructure, except Safety Barrier Curb) f'c = 4,000 psi
Reinforcing Steel (Grade 60) fy = 60,000 psi

**Joint Filler:**

All joint filler shall be in accordance with Sec 1057 for preformed sponge rubber expansion and partition joint filler, except as noted.

**Reinforcing Steel:**

Minimum clearance to reinforcing steel shall be 1-1/2", unless otherwise shown.

**Miscellaneous:**

Bars bonded in old concrete not removed shall be cleanly stripped and embedded into new concrete where possible. If length is available, old bars shall extend into new concrete at least 40 diameters for smooth bars and 30 diameters for deformed bars, unless otherwise noted.

Roadway surfacing adjacent to bridge ends shall match new bridge approach slab surface (Roadway Item).

Outline of old work is indicated by light dashed lines. Heavy lines indicate new work.

Contractor shall verify all dimensions in field before ordering new material.

The area exposed by the removal of concrete and not covered with new concrete shall be coated with an approved qualified special mortar in accordance with Sec 704.

Protective coating for concrete bents and piers (Epoxy) shall be applied as shown on the bridge plans and in accordance with Sec 711.

High strength bolts, nuts and washers will be sampled for quality assurance as specified in Sec 106.

**Traffic Handling:**

Maintain traffic on structure during construction.
See Sheet No. 2 for Details of Stage Construction and Roadway Plans for traffic control.

### Estimated Quantities

| | Item | | Total |
|---|---|---|---|
| | Removal of Existing Bridge Decks | sq. foot | 4558 |
| | Partial Removal of Substructure Concrete | lump sum | 1 |
| | Bridge Approach Slab (Bridge) | sq. yard | 285 |
| | Slab on Steel | sq. yard | 455 |
| * | Safety Barrier Curb | linear foot | 234 |
| | Slab on Wing Wall | sq. yard | 77 |
| | Conduit System on Structure | lump sum | 1 |
| | Protective Coating - Concrete Bents and Piers (Epoxy) | lump sum | 1 |
| | Silicone Expansion Joint Sealant | linear foot | 58 |
| | | | |
| | | | |
| | | | |
| | | | |

* Safety barrier curb shall be cast-in-place option or slip-form option.

Cost of any required excavation for bridge will be considered completely covered by the contract unit price for other items.

Cost of removing existing slabs on wing wall will be considered completely covered by the contract unit price for Removal of Existing Bridge Decks per sq. foot.

All concrete and reinforcement in the end bents above the top of existing beam is included in the Estimated Quantities for Slab on Steel.

All concrete and reinforcement in the slabs on wing wall and toe walls is included in the Estimated Quantities for Slab on Wing Wall.

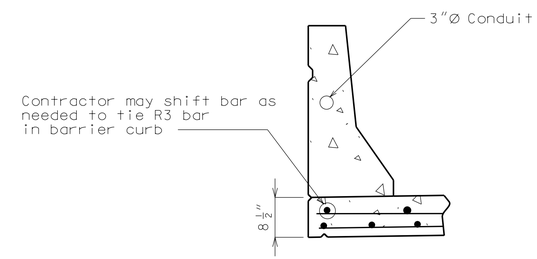


PART SECTION THRU EDGE OF SLAB

### Estimated Quantities for Slab on Steel

| Item | | Total |
|---|---|---|
| Class B-2 Concrete | cu. yard | 189.4 |
| Reinforcing Steel (Epoxy Coated) | pound | 36,440 |

### Estimated Quantities for Slab on Wing Wall

| Item | | Total |
|---|---|---|
| Class B-2 Concrete | cu. yard | 19.5 |
| Reinforcing Steel (Epoxy Coated) | pound | 5220 |

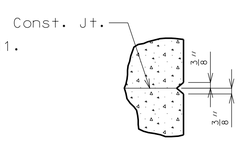


DETAIL "A"

The tables of Estimated Quantities for Slab on Steel and Slab on Wing Wall represent the quantities used by the State in preparing the cost estimate for concrete slabs. The area of the concrete slab will be measured to the nearest square yard from end of slab to end of slab and the overall width shown in the Typical Section Thru Slab. Payment for conventional forms or optional stay-in-place forms, all concrete and coated reinforcing steel will be considered completely covered by the contract unit price for the slab.

Method of forming the slab shall be in accordance with Sec 703. All hardware for forming the slab to be left in place as a permanent part of the structure shall be coated in accordance with ASTM A123 or ASTM B633 with a thickness class SC 4 and a finish type I, II or III.

Slab shall be cast-in-place with conventional forming or stay-in-place corrugated steel forms. Precast prestressed panels will not be permitted.

For optional stay-in-place form details, see Sheet No. 3.

**REPAIRS TO BRIDGE: RTE. I-35 SB & RTE. I-70 WB OVER CHARLOTTE STREET**

STATE ROAD: MIDTOWN FREEWAY
IN KANSAS CITY
STA. 14+33.27± (MATCH EXIST.)

| |
|---|
| STD. 609.00 |
| STD. 617.10 |
| STD. 706.35 |

Designed July 2012
Detailed Oct. 2012
Checked Nov. 2012

Note: This drawing is not to scale. Follow dimensions.



"THIS MEDIA SHOULD NOT BE CONSIDERED A CERTIFIED DOCUMENT."

| DATE PREPARED | |
|---|---|
| 1/17/2013 | |
| ROUTE I-35 | STATE MO |
| DISTRICT BR | SHEET NO. 1 |
| COUNTY JACKSON | |
| JOB NO. J4I2371 | |
| CONTRACT ID. | |
| PROJECT NO. | |
| BRIDGE NO. L07816 | |

DESCRIPTION
DATE

MISSOURI HIGHWAYS AND TRANSPORTATION COMMISSION
105 WEST CAPITOL
JEFFERSON CITY, MO 65102
1-888-ASK-MODOT (1-888-275-6636)

IF A SEAL IS PRESENT ON THIS SHEET IT HAS BEEN ELECTRONICALLY SEALED AND DATED.

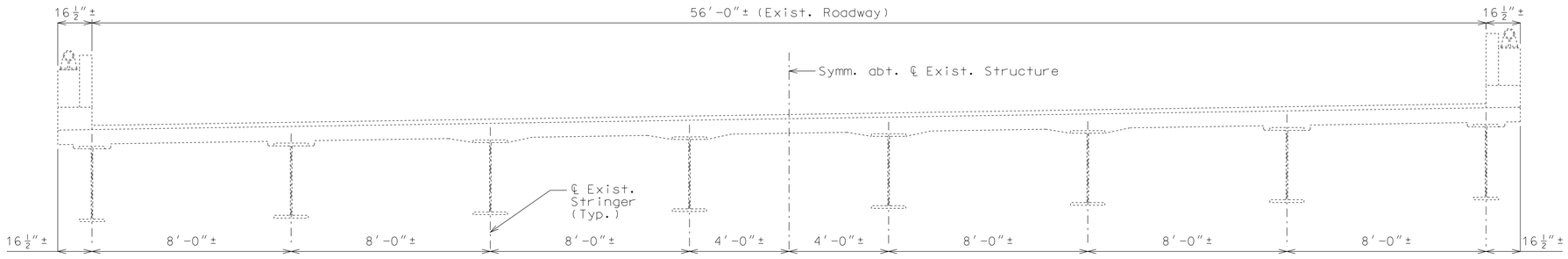


EXISTING SLAB SECTION

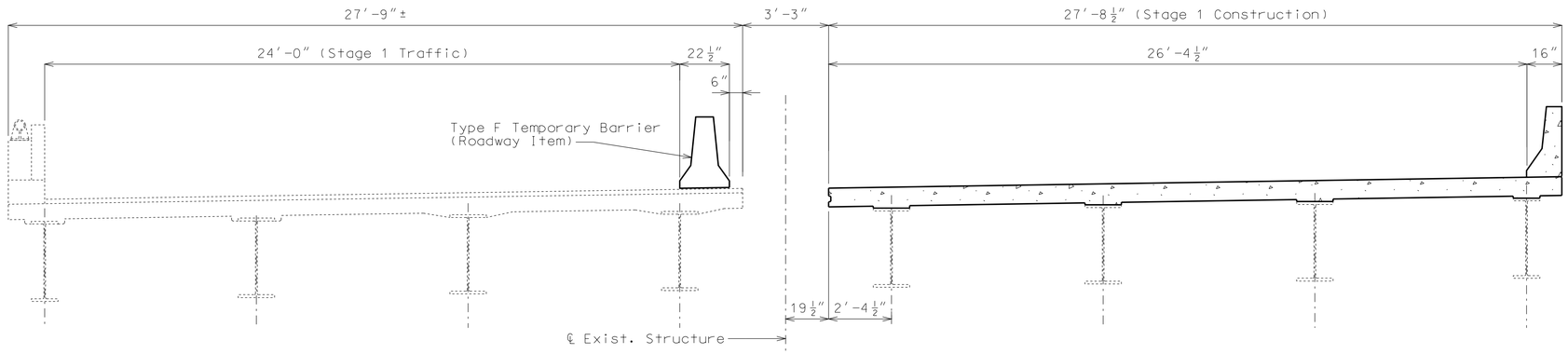


STAGE 1 CONSTRUCTION

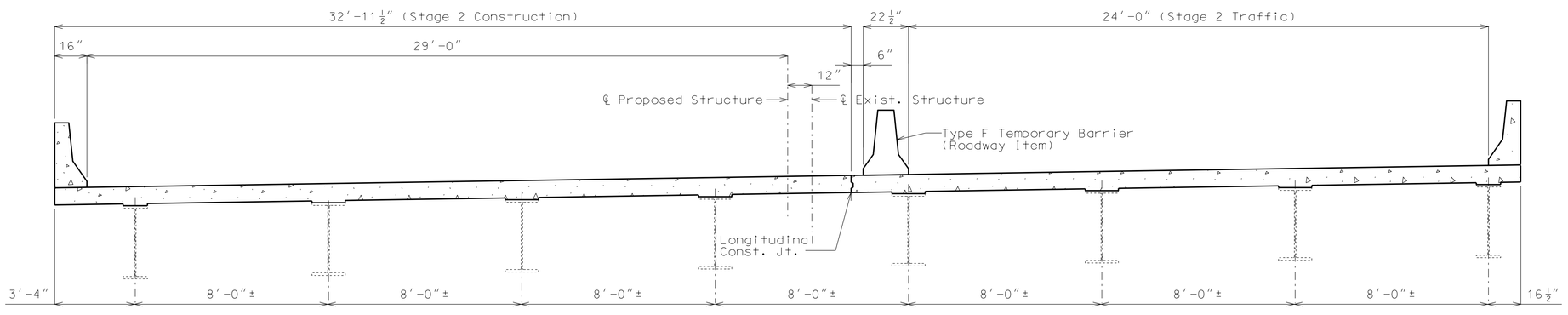


STAGE 2 CONSTRUCTION

Notes:

Rivets on existing intermediate diaphragms that connect stringers under different construction stage slab pours shall be removed, replaced with new 3/4" H.S. bolts and installed snug tight prior to removal of existing slab, then tightened after both adjacent slab pours are completed.

Cost of removing existing rivets and furnishing and installing new 3/4"Ø H.S. bolts will be considered completely covered by the contract unit price for other items.

Notes:

Method of attachment for the Type F Temporary Barrier shall be the Tie-Down Strap.

The contractor may use the bolt through the deck method of attaching the Type F Temporary Barrier for Stage 1 only.

# DETAILS OF STAGE CONSTRUCTION

Detailed Oct. 2012
Checked Nov. 2012

Note: This drawing is not to scale. Follow dimensions.



"THIS MEDIA SHOULD NOT BE CONSIDERED A CERTIFIED DOCUMENT."

| | |
|---|---|
| DATE PREPARED | 1/17/2013 |
| ROUTE | I-35 |
| STATE | MO |
| DISTRICT | BR |
| SHEET NO. | 2 |
| COUNTY | JACKSON |
| JOB NO. | J4I2371 |
| CONTRACT ID. | |
| PROJECT NO. | |
| BRIDGE NO. | L07816 |

| DATE | DESCRIPTION |
|---|---|
| | |

MISSOURI HIGHWAYS AND TRANSPORTATION COMMISSION
105 WEST CAPITOL
JEFFERSON CITY, MO 65102
1-888-ASK-MODOT (1-888-275-6636)

IF A SEAL IS PRESENT ON THIS SHEET IT HAS BEEN ELECTRONICALLY SEALED AND DATED.

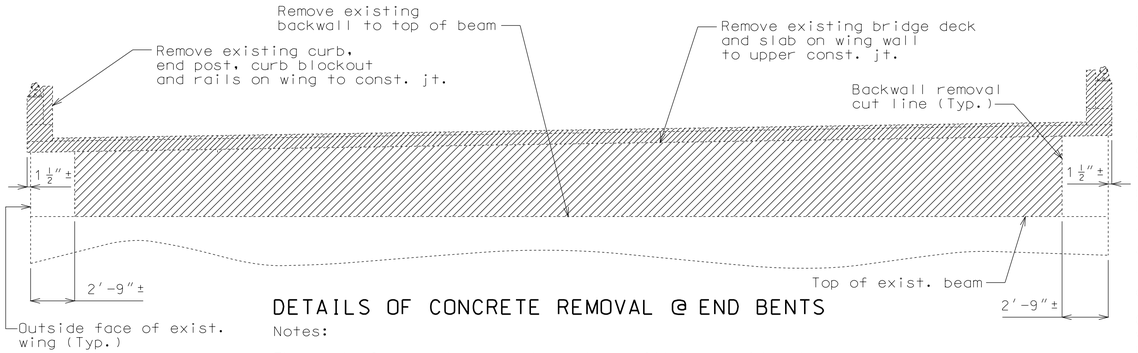


## DETAILS OF CONCRETE REMOVAL @ END BENTS

Notes:

The cost of concrete removal as shown will be considered completely covered by the contract unit price for Removal of Existing Bridge Decks, except the cost of existing backwall removal will be considered completely covered by Partial Removal of Substructure Concrete.

All exposed backwall reinforcement at End Bent No. 2 only shall be cut off one inch below concrete removal surface, and the resulting holes shall be filled with a qualified special mortar.

A smooth, level surface shall be provided at End Bent No. 2 removal lines.

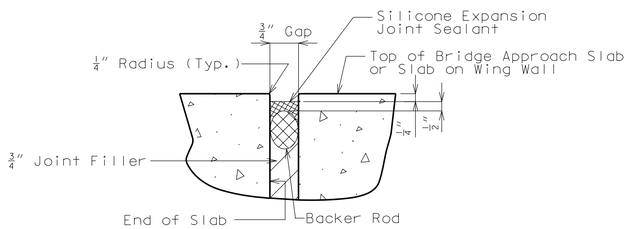


## DETAIL OF SILICONE EXPANSION JOINT SEALANT AT END BENT NO. 2

Note:

Silicone Expansion Joint Sealant shall be in accordance with Sec 717.

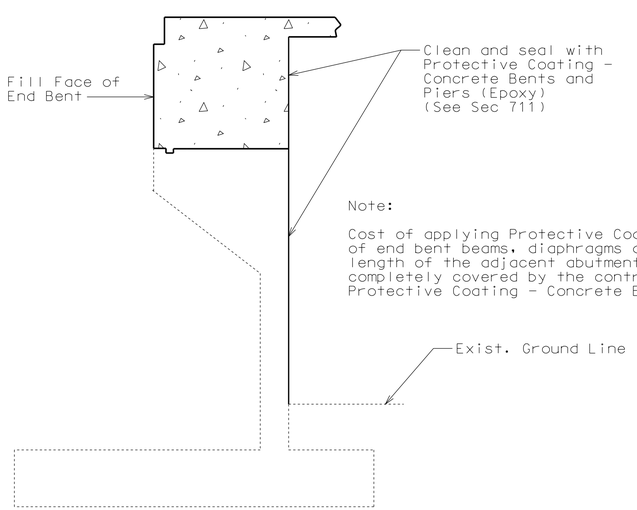


Note:

Cost of applying Protective Coating to front face of end bent beams, diaphragms and approximately one half the length of the adjacent abutment wall will be considered completely covered by the contract lump sum price for Protective Coating - Concrete Bents and Piers (Epoxy).

## TYPICAL SECTION THRU END BENTS NO. 1 & 2 SHOWING PROTECTIVE COATING

Notes:

Existing vertical clearance sign and attachment brackets shall be removed and welds ground flush with stringer webs. Payment will be considered completely covered by the contract unit price for Removal of Existing Bridge Decks.

Surfaces of existing structural steel exposed from vertical clearance sign removal shall be recoated with one 6-mil thickness of gray epoxy-mastic primer applied over an SSPC-SP3 surface preparation in accordance with Sec 1081. The cost of surface preparation and gray epoxy-mastic primer will be considered completely covered by the contract unit price for Removal of Existing Bridge Decks.

The new vertical clearance sign is a Roadway Item and shall be attached to the Safety Barrier Curb.

The location and attachment details of the new vertical clearance sign shall be determined by the engineer.

Cost of furnishing and installing cone expansion anchors will be considered completely covered by the contract unit price for Safety Barrier Curb.

The 3/4"Ø diameter cone expansion anchors shall have a minimum ultimate pullout strength of 12,000 lbs. in concrete with f'c = 4,000 psi.

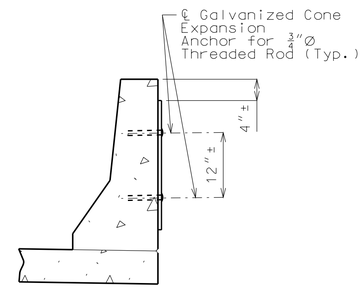


## PART SECTION THRU BARRIER CURB SHOWING SIGN ATTACHMENT

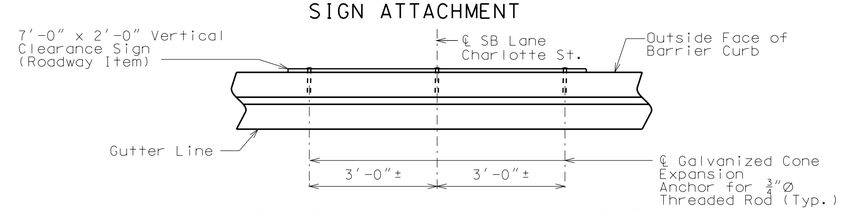


## PART PLAN SHOWING SIGN LOCATION

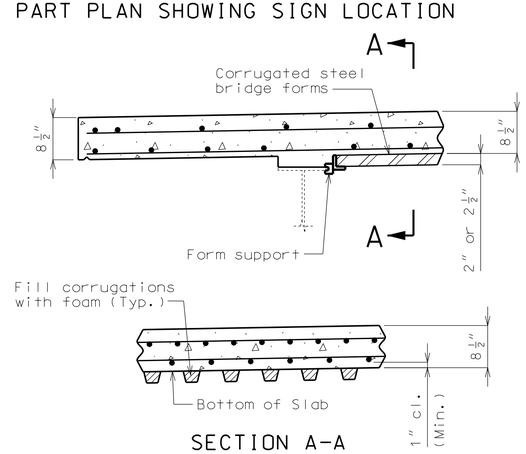


## SECTION A-A

## OPTIONAL STAY-IN-PLACE FORM DETAILS

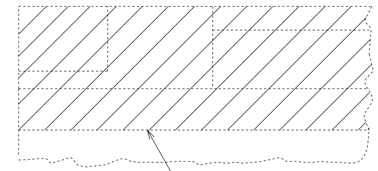


## ELEVATION OF END POST SHOWING CONCRETE REMOVAL LIMITS

Note:

Cost of removing curb, parapet, end post, rails and curb blockout concrete at end bents, as shown, will be considered completely covered by the contract unit price for Removal of Existing Bridge Decks.

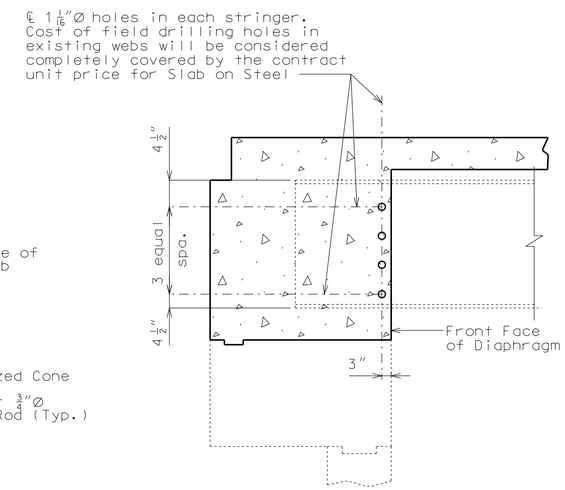


## DETAIL OF WEB HOLES AT END BENT

Notes:

Corrugated steel forms, supports, closure elements and accessories shall be in accordance with grade requirement and coating designation G165 of ASTM A653. Complete shop drawings of the permanent steel deck forms shall be required in accordance with Sec 1080.

Corrugations of stay-in-place forms shall be filled with an expanded polystyrene material. The polystyrene material shall be placed in the forms with an adhesive in accordance with the manufacturer's recommendations.

Form sheets shall not rest directly on the top of girders, stringers or floorbeams flanges. Sheets shall be securely fastened to form supports with a minimum bearing length of one inch on each end. Form supports shall be placed in direct contact with the flange. Welding on or drilling holes in the flanges of the girders, stringers or floorbeams will not be permitted. All steel fabrication and construction shall be in accordance with Sec's 1080 and 712. MoDOT certified field welders will not be required for welding of the form supports.

The contractor shall provide temporary bracing as necessary to prevent stringers from rotating during slab pour. The cost for temporary bracing will be considered completely covered by the contract unit price for Slab on Steel.

Detailed Oct. 2012
Checked Nov. 2012

Note: This drawing is not to scale. Follow dimensions.



"THIS MEDIA SHOULD NOT BE CONSIDERED A CERTIFIED DOCUMENT."

| DATE PREPARED | |
|---|---|
| 1/17/2013 | |
| ROUTE | STATE |
| I-35 | MO |
| DISTRICT | SHEET NO. |
| BR | 3 |
| COUNTY | |
| JACKSON | |
| JOB NO. | |
| J4I2371 | |
| CONTRACT ID. | |
| PROJECT NO. | |
| BRIDGE NO. | |
| L07816 | |

| DATE | DESCRIPTION |
|---|---|
| | |

MISSOURI HIGHWAYS AND TRANSPORTATION COMMISSION
105 WEST CAPITOL
JEFFERSON CITY, MO 65102
1-888-ASK-MODOT (1-888-275-6636)

IF A SEAL IS PRESENT ON THIS SHEET IT HAS BEEN ELECTRONICALLY SEALED AND DATED.

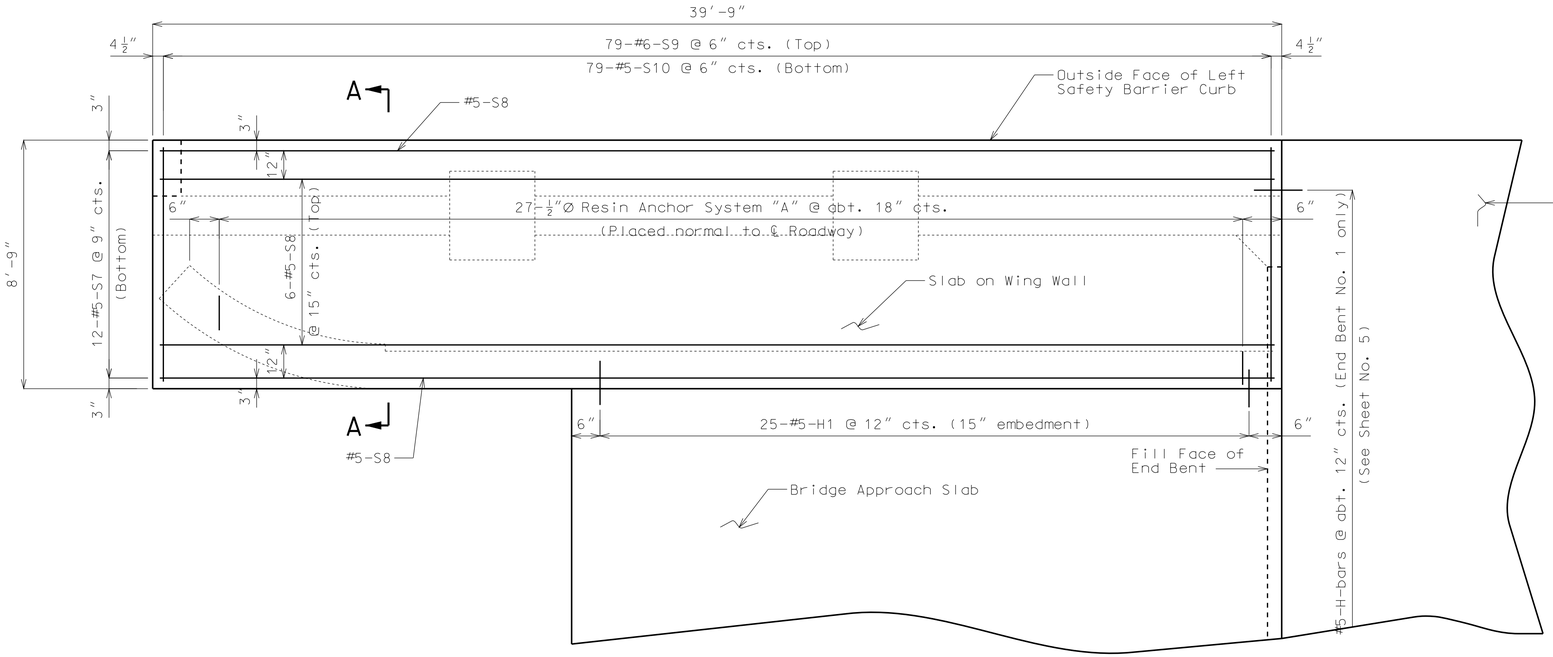


## PLAN OF SLAB ON WING WALL

(End Bent No. 1 shown, End Bent No. 2 similar)

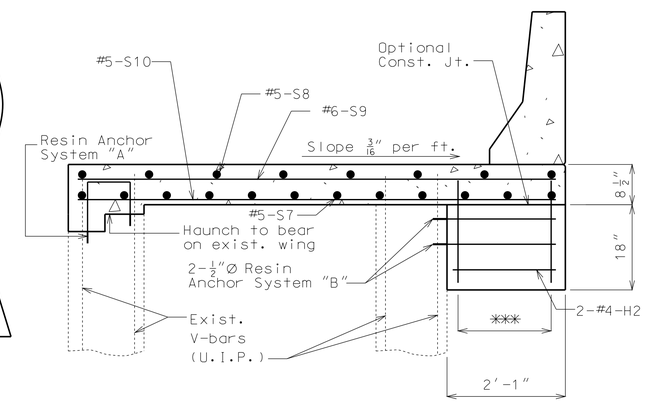


## SECTION A-A

✱✱✱ 4-#4-V1 (Each Face)

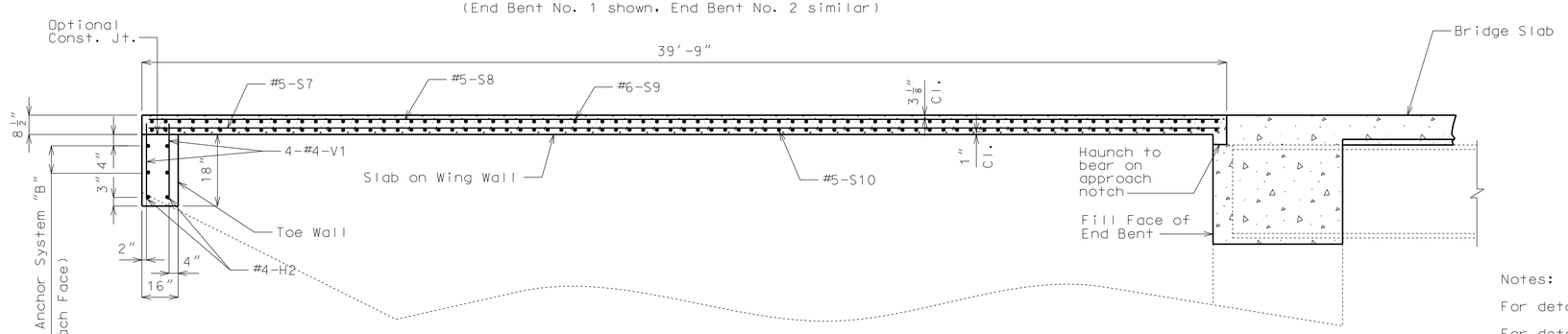


## SECTION NEAR EXISTING WING SHOWING PLACEMENT OF SLAB ON WING WALL AND TOE WALL

(End Bent No. 1 shown, End Bent No. 2 similar)

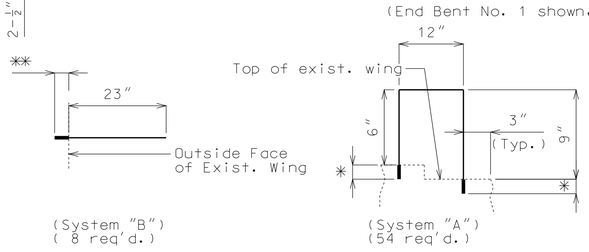


## DETAILS OF RESIN ANCHOR SYSTEMS

✱✱ Manufacturer's recommended embedment length (5" min.)

✱ Manufacturer's recommended embedment length (5" min.) Adjust embedment depth as needed to maintain 3 1/8" (Min.) clear to top of slab.

Notes:

For details of Bridge Approach Slab, see Sheets No. 16 & 17.

For details of Bridge Slab reinforcement, see Sheets No. 7 & 8.

For details and reinforcement of Safety Barrier Curb, see Sheets No. 10 thru 15.

For details of End Bents not shown, see Sheets No. 5 & 6.

Payment for all concrete and reinforcement in the slab on wing wall and toe wall, complete-in-place, will be considered completely covered by the contract unit price for Slab on Wing Wall.

Longitudinal slab dimensions are measured horizontally.

The #5-S10 & #6-S9 bars shall be placed normal to ℄ Roadway.

The contractor shall use one of the qualified resin anchor systems in accordance with Sec 1039.

Cost of furnishing and installing the resin anchor system complete-in-place will be considered completely covered by the contract unit price for Slab on Wing Wall.

The minimum embedment depth in concrete with f'c = 4,000 psi for the resin anchor system shall be that required to meet the minimum ultimate pullout strength in accordance with Sec 1039 but shall not be less than 5".

An epoxy coated #4 Grade 60 reinforcing bar shall be substituted for the 1/2"Ø threaded rod.

# DETAILS OF SLAB ON WING WALL AND TOE WALL

Detailed Oct. 2012
Checked Nov. 2012

Note: This drawing is not to scale. Follow dimensions.



"THIS MEDIA SHOULD NOT BE CONSIDERED A CERTIFIED DOCUMENT."

| | |
|---|---|
| DATE PREPARED | 1/17/2013 |
| ROUTE | I-35 |
| STATE | MO |
| DISTRICT | BR |
| SHEET NO. | 4 |
| COUNTY | JACKSON |
| JOB NO. | J4I2371 |
| CONTRACT ID. | |
| PROJECT NO. | |
| BRIDGE NO. | L07816 |

DESCRIPTION

DATE

MISSOURI HIGHWAYS AND TRANSPORTATION COMMISSION

105 WEST CAPITOL
JEFFERSON CITY, MO 65102
1-888-ASK-MODOT (1-888-275-6636)

IF A SEAL IS PRESENT ON THIS SHEET IT HAS BEEN ELECTRONICALLY SEALED AND DATED.

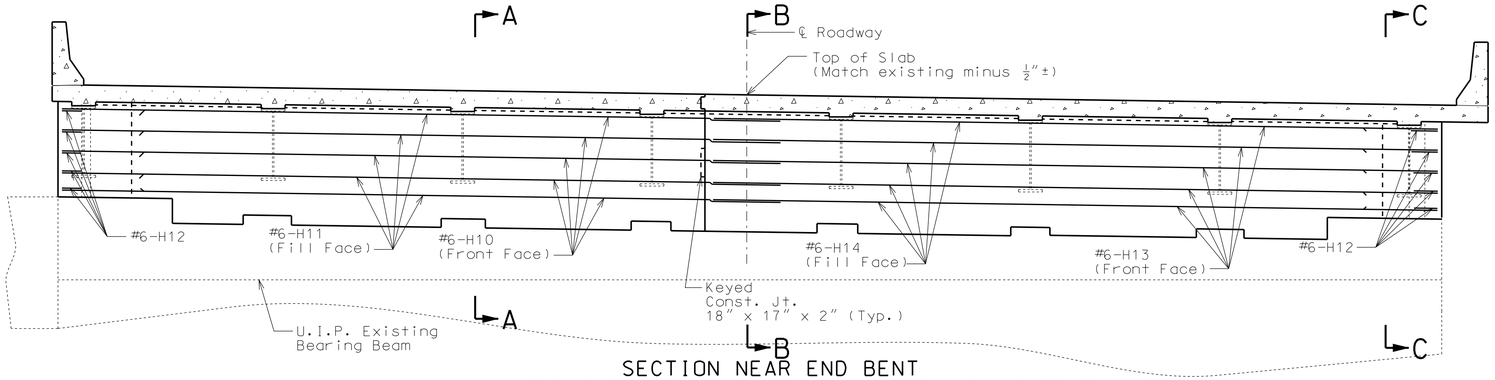


## SECTION NEAR END BENT

Note: Existing steel end diaphragms not shown for clarity (leave in place).
Resin anchors not shown for clarity.

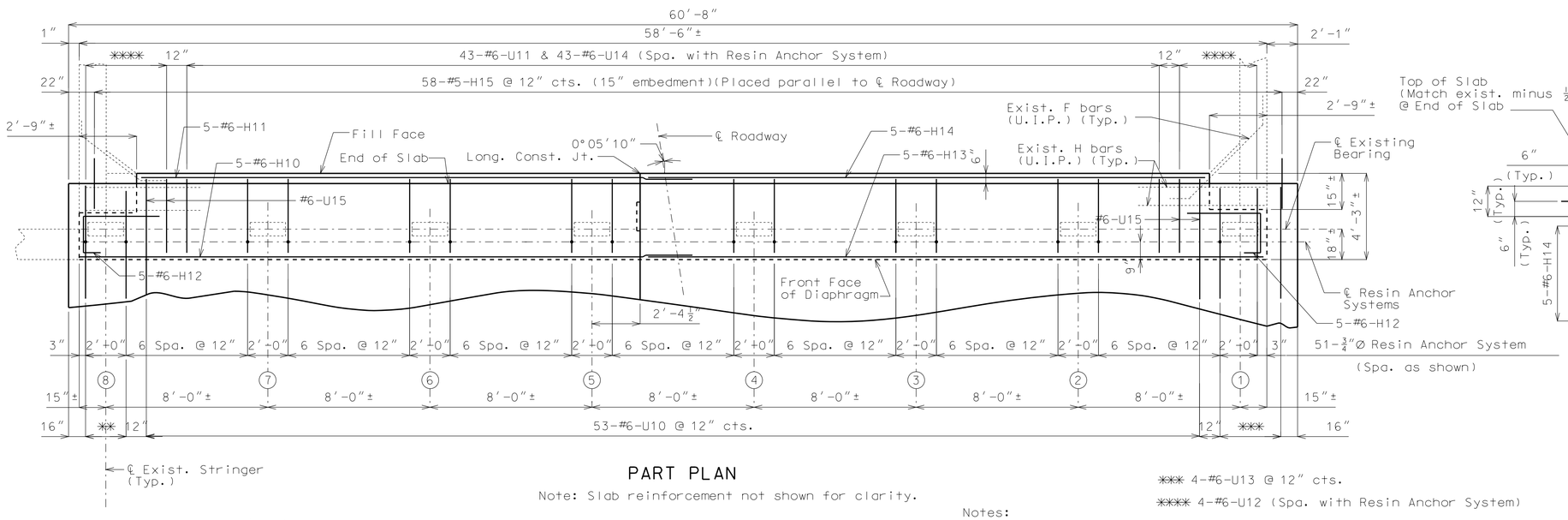


## PART PLAN

Note: Slab reinforcement not shown for clarity.

✱✱ 2-#6-U13 @ 12" cts.

✱✱✱ 4-#6-U13 @ 12" cts.

✱✱✱✱ 4-#6-U12 (Spa. with Resin Anchor System)

Note:

The H10 & H13 bars are segmented bars for ease of placement of bars through stringer web holes between stringers. The total bar lengths for the H10 & H13 bars shown in Bill of Reinforcing Steel allow for one splice with a lap splice length of 3'-6". Actual bar segment lengths to be determined by contractor for ease of installing bars. The contractor may use a mechanical bar splice in lieu of a lap splice. When a mechanical bar splice is used, the actual bar segment lengths will be determined by the contractor to accommodate manufacturer's recommendations for installation and ease of construction. The cost of furnishing and installing the bar splices will be considered completely covered by the contract unit price for Slab on Steel. No adjustment of the quantity of reinforcing steel will be allowed for the use of mechanical bar splices.

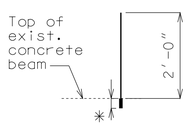


(51 req'd.)

✱ Manufacturer's recommended embedment length (5" min.)

## DETAILS OF RESIN ANCHOR SYSTEM

Notes:

All U-Bars in End Bent shall be placed parallel to ℄ Roadway.

For reinforcement in safety barrier curb, see Sheets No. 10 thru 15.

The exposed and accessible surfaces of the existing structural steel and bearings that will be encased in concrete shall be cleaned with a minimum of SSPC-SP-2 surface preparation before concrete is poured. Payment for cleaning steel to be encased in concrete will be considered completely covered by the contract unit price for Slab on Steel.

For Details of Stage Construction, see Sheet No. 2.

For Detail of Web Holes at End Bent, see Sheet No. 3.

The contractor shall use one of the qualified resin anchor systems in accordance with Sec 1039.

Cost of furnishing and installing the resin anchor system, complete in place, will be considered completely covered by the contract unit price for Slab on Steel.

The minimum embedment depth in concrete with f'c = 4,000 psi for the resin anchor system shall be that required to meet the minimum ultimate pullout strength in accordance with Sec 1039 but shall not be less than 5".

An epoxy coated #6 Grade 60 reinforcing bar shall be substituted for the ¾"Ø threaded rod.

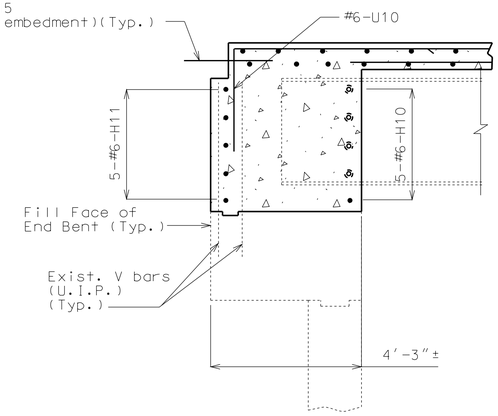


## SECTION A-A

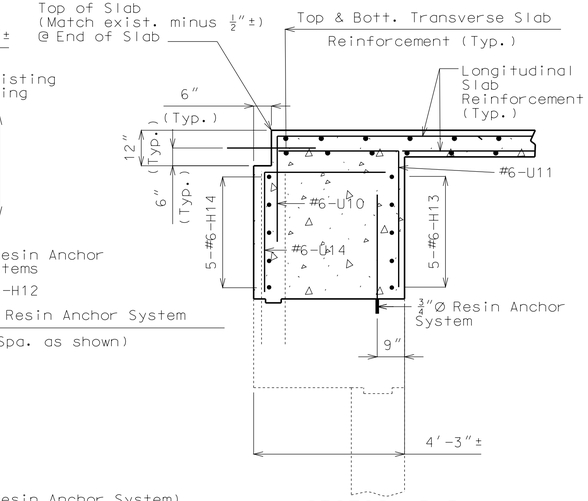


## SECTION B-B

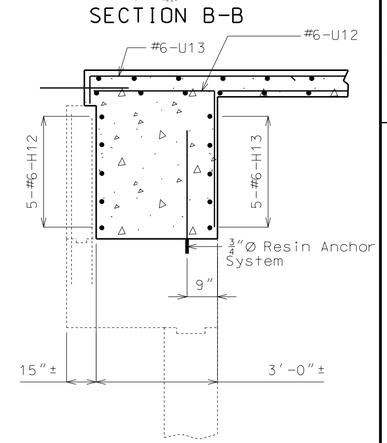


## SECTION C-C

"THIS MEDIA SHOULD NOT BE CONSIDERED A CERTIFIED DOCUMENT."

| DATE PREPARED | |
|---|---|
| 1/17/2013 | |
| ROUTE | STATE |
| I-35 | MO |
| DISTRICT | SHEET NO. |
| BR | 5 |
| COUNTY | |
| JACKSON | |
| JOB NO. | |
| J4I2371 | |
| CONTRACT ID. | |
| PROJECT NO. | |
| BRIDGE NO. | |
| L07816 | |

DESCRIPTION

DATE

MISSOURI HIGHWAYS AND TRANSPORTATION COMMISSION

105 WEST CAPITOL
JEFFERSON CITY, MO 65102
1-888-ASK-MODOT (1-888-275-6636)

IF A SEAL IS PRESENT ON THIS SHEET IT HAS BEEN ELECTRONICALLY SEALED AND DATED.

Detailed Oct. 2012
Checked Nov. 2012

# DETAILS OF END BENT NO. 1

Note: This drawing is not to scale. Follow dimensions.

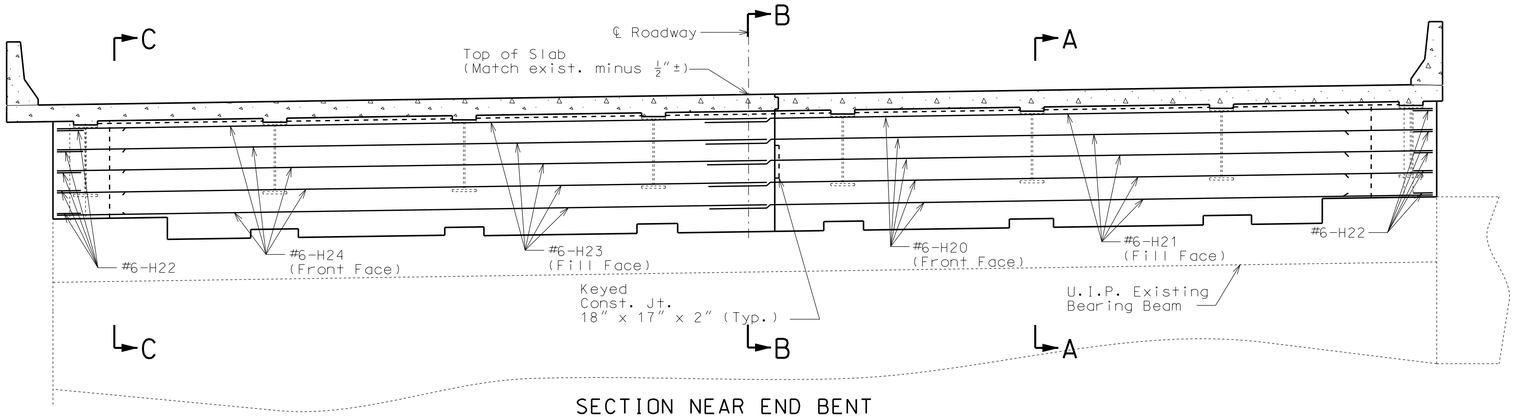


## SECTION NEAR END BENT

Note: Existing steel end diaphragms not shown for clarity (leave in place).

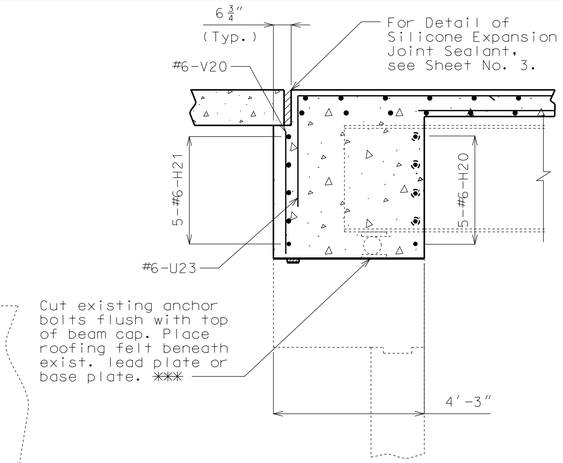


## SECTION A-A

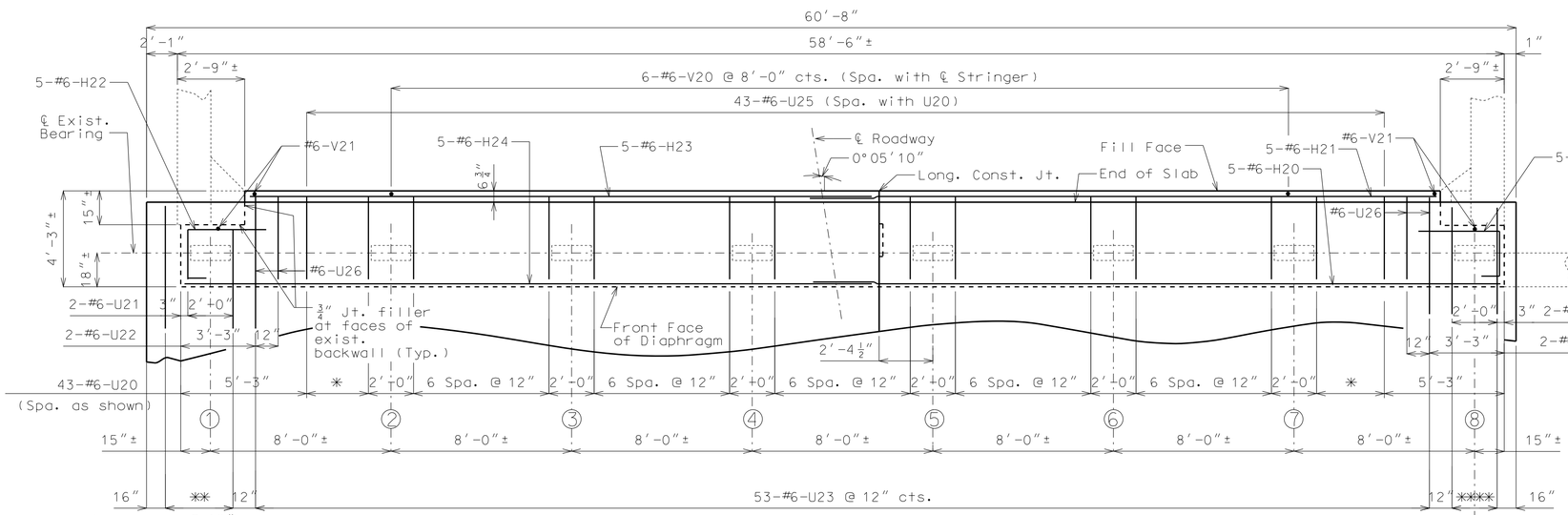


## PART PLAN

Note: Slab reinforcement not shown for clarity.

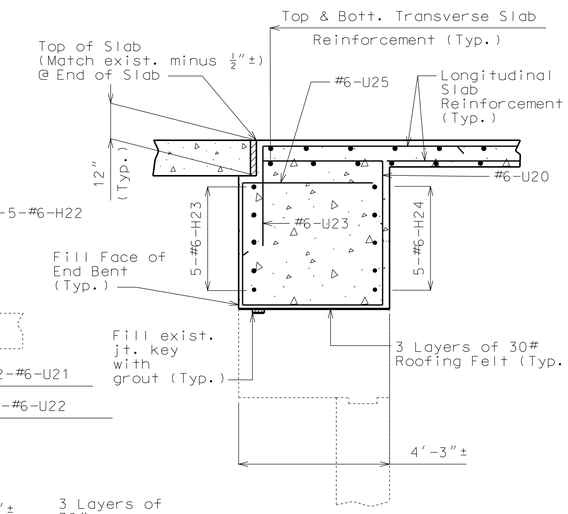


## SECTION B-B

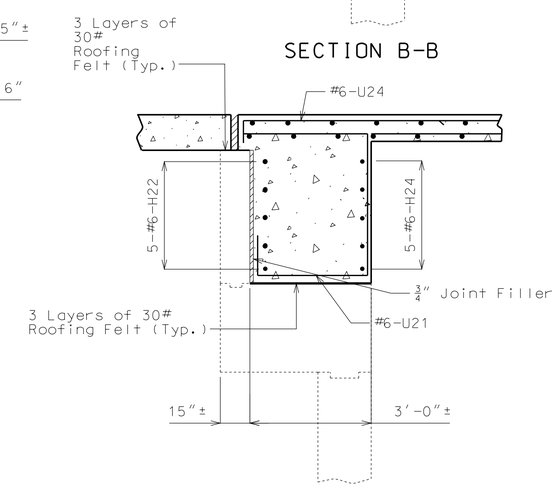


## SECTION C-C

Note:

The H20 & H24 bars are segmented bars for ease of placement of bars through stringer web holes between stringers. The total bar lengths for H20 & H24 bars shown in Bill of Reinforcing Steel allow for one splice with a lap splice length of 3'-6". Actual bar segment lengths to be determined by contractor for ease of installing bars. The contractor may use a mechanical bar splice in lieu of a lap splice. When a mechanical bar splice is used, the actual bar segment lengths will be determined by the contractor to accommodate manufacturer's recommendations for installation and ease of construction. The cost of furnishing and installing the bar splices will be considered completely covered by the contract unit price for Slab on Steel. No adjustment of the quantity of reinforcing steel will be allowed for the use of mechanical bar splices.

*** These tasks and the temporary support of the stringer ends while completing these tasks will be considered completely covered by the contract unit price for Slab on Steel.

Notes:

All U-Bars in End Bent shall be placed parallel to ℄ Roadway.

For reinforcement in safety barrier curb, see Sheets No. 10 thru 15.

The exposed and accessible surfaces of the existing structural steel and bearings that will be encased in concrete shall be cleaned with a minimum of SSPC-SP-2 surface preparation before concrete is poured. Payment for cleaning steel to be encased in concrete will be considered completely covered by the contract unit price for Slab on Steel.

For Details of Stage Construction, see Sheet No. 2.

For Detail of Web Holes at End Bent, see Sheet No. 3.

# DETAILS OF END BENT NO. 2

Detailed Oct. 2012
Checked Nov. 2012

Note: This drawing is not to scale. Follow dimensions.



"THIS MEDIA SHOULD NOT BE CONSIDERED A CERTIFIED DOCUMENT."

| DATE PREPARED | |
|---|---|
| 1/17/2013 | |
| ROUTE | STATE |
| I-35 | MO |
| DISTRICT | SHEET NO. |
| BR | 6 |
| COUNTY | |
| JACKSON | |
| JOB NO. | |
| J4I2371 | |
| CONTRACT ID. | |
| PROJECT NO. | |
| BRIDGE NO. | |
| L07816 | |

| DESCRIPTION | DATE |
|---|---|
| | |

MISSOURI HIGHWAYS AND TRANSPORTATION COMMISSION
105 WEST CAPITOL
JEFFERSON CITY, MO 65102
1-888-ASK-MODOT (1-888-275-6636)

IF A SEAL IS PRESENT ON THIS SHEET IT HAS BEEN ELECTRONICALLY SEALED AND DATED.

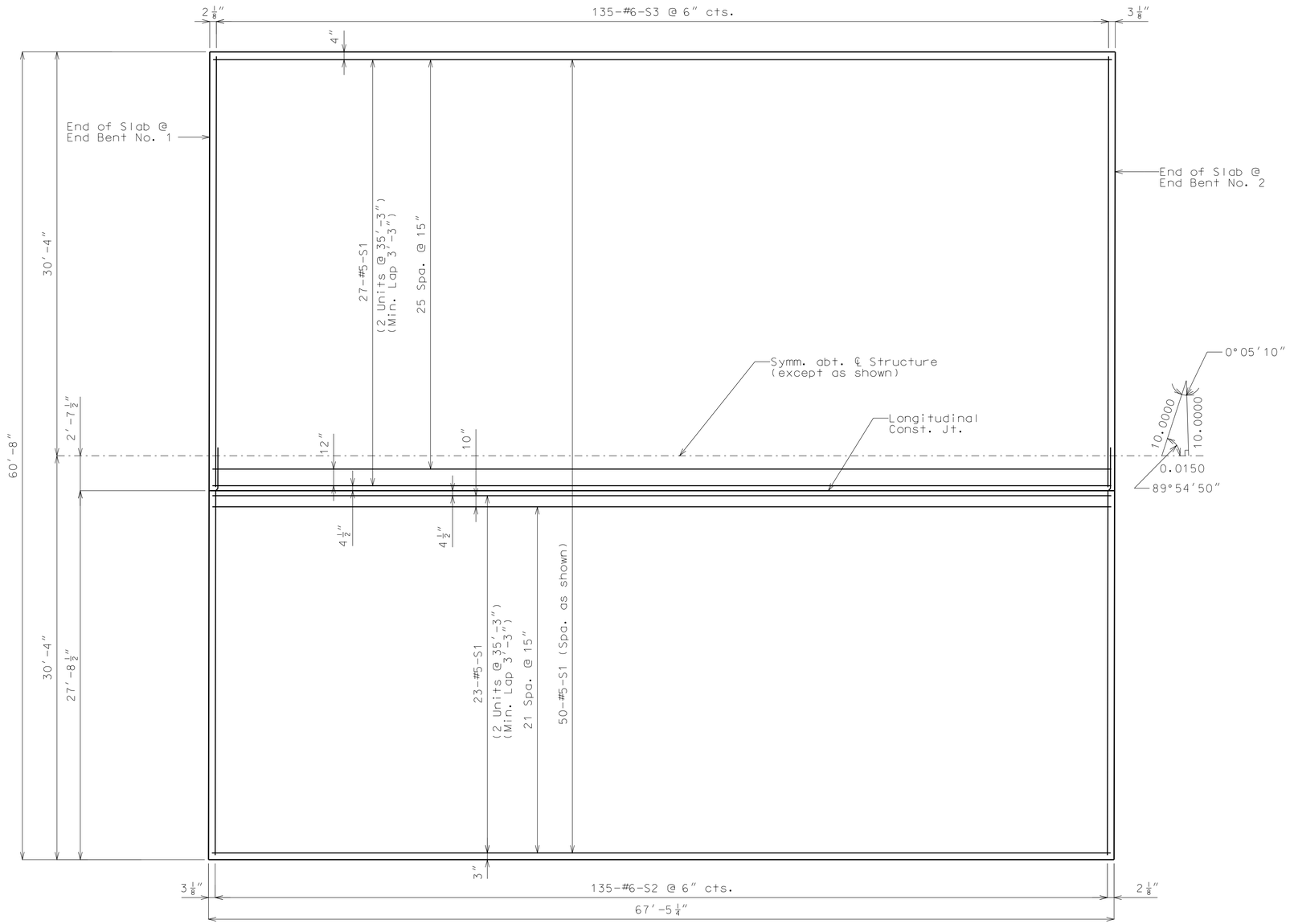


SPAN (1-2)

## PLAN OF SLAB SHOWING TOP REINFORCEMENT

Notes:

Longitudinal slab dimensions are measured horizontally.

For Typical Section Thru Slab, see Sheet No. 1.

For Details and Reinforcement of Safety Barrier Curbs, see Sheets No. 10 thru 15.

For Plan of Slab Showing Bottom Reinforcement, see Sheet No. 8.

For Optional Stay-in-Place Form Details, see Sheet No. 3.

Slab shall be poured from end to end at a minimum rate of 25 cu. yd./hr.

Alternate pour sequences may be submitted to the engineer for approval. Keyed construction joints shall be provided between pours.

Slab is to be considered at a uniform depth as shown on the plans. Haunching will vary.

Deflection Note:

The contractor shall determine dead load deflections and haunching based on field measurements and/or existing bridge plans and may be adjusted based on the difference between the new and existing dead load weights.

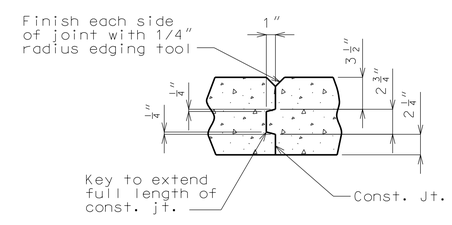


## SLAB CONSTRUCTION JOINT DETAIL

Detailed Oct. 2012
Checked Nov. 2012

Note: This drawing is not to scale. Follow dimensions.



"THIS MEDIA SHOULD NOT BE CONSIDERED A CERTIFIED DOCUMENT."

| | |
|---|---|
| DATE PREPARED | 1/17/2013 |
| ROUTE | I-35 |
| STATE | MO |
| DISTRICT | BR |
| SHEET NO. | 7 |
| COUNTY | JACKSON |
| JOB NO. | J4I2371 |
| CONTRACT ID. | |
| PROJECT NO. | |
| BRIDGE NO. | L07816 |

| DESCRIPTION | DATE |
|---|---|
| | |

MISSOURI HIGHWAYS AND TRANSPORTATION COMMISSION

105 WEST CAPITOL
JEFFERSON CITY, MO 65102
1-888-ASK-MODOT (1-888-275-6636)

IF A SEAL IS PRESENT ON THIS SHEET IT HAS BEEN ELECTRONICALLY SEALED AND DATED.

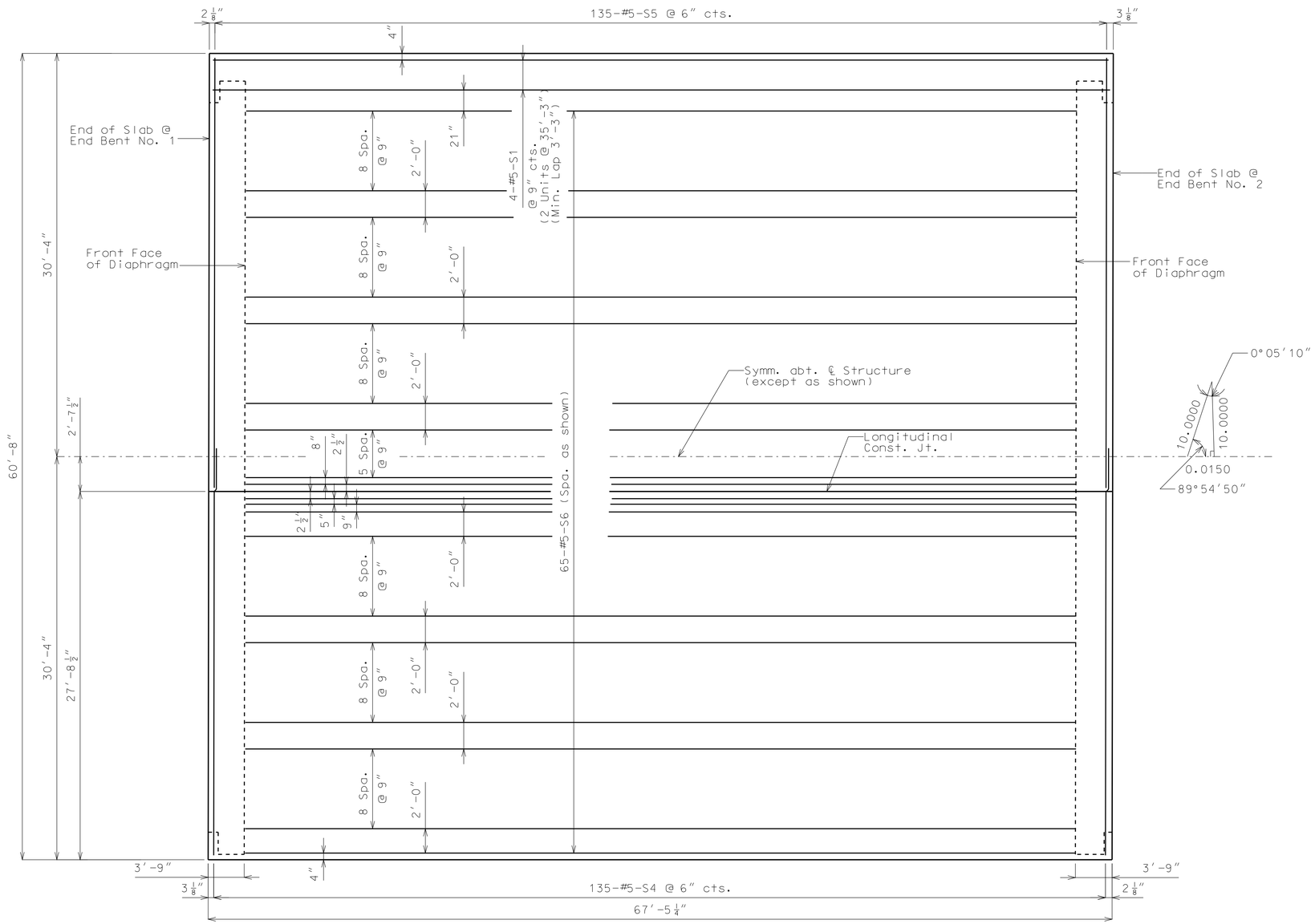


SPAN (1-2)

## PLAN OF SLAB SHOWING BOTTOM REINFORCEMENT

Notes:

Longitudinal slab dimensions are measured horizontally.

For Typical Section Thru Slab, see Sheet No. 1.

For Details and Reinforcement of Safety Barrier Curbs, see Sheets No. 10 thru 15.

For Plan of Slab Showing Top Reinforcement, see Sheet No. 7.

For Optional Stay-in-Place Form Details, see Sheet No. 3.

Slab shall be poured from end to end at a minimum rate of 25 cu. yd./hr.

Alternate pour sequences may be submitted to the engineer for approval. Keyed construction joints shall be provided between pours.

Slab is to be considered at a uniform depth as shown on the plans. Haunching will vary.

Deflection Note:

The contractor shall determine dead load deflections and haunching based on field measurements and/or existing bridge plans and may be adjusted based on the difference between the new and existing dead load weights.

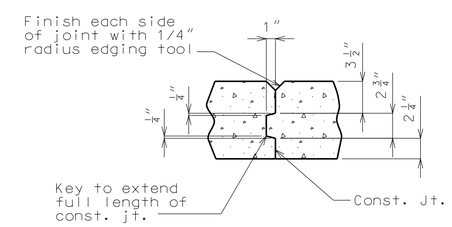


## SLAB CONSTRUCTION JOINT DETAIL

Detailed Oct. 2012
Checked Nov. 2012

Note: This drawing is not to scale. Follow dimensions.



"THIS MEDIA SHOULD NOT BE CONSIDERED A CERTIFIED DOCUMENT."

| | |
|---|---|
| DATE PREPARED | 1/17/2013 |
| ROUTE | I-35 |
| STATE | MO |
| DISTRICT | BR |
| SHEET NO. | 8 |
| COUNTY | JACKSON |
| JOB NO. | J4I2371 |
| CONTRACT ID. | |
| PROJECT NO. | |
| BRIDGE NO. | L07816 |

| DATE | DESCRIPTION |
|---|---|

MISSOURI HIGHWAYS AND TRANSPORTATION COMMISSION

105 WEST CAPITOL
JEFFERSON CITY, MO 65102
1-888-ASK-MODOT (1-888-275-6636)

IF A SEAL IS PRESENT ON THIS SHEET IT HAS BEEN ELECTRONICALLY SEALED AND DATED.

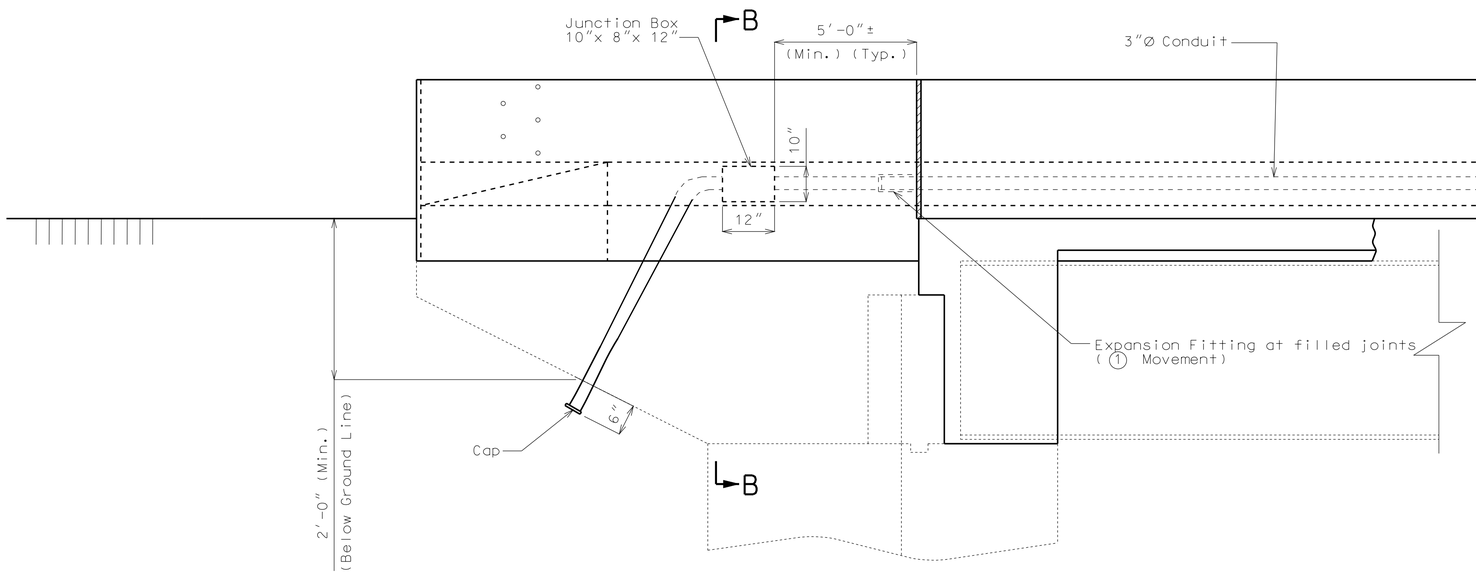


## PART ELEVATION OF JUNCTION BOX AT END BENT

(End Bent No. 1 shown, End Bent No. 2 similar) (right side shown, left side similar)

Notes:

All conduits shall be rigid nonmetallic schedule 40 heavy wall polyvinyl chloride (PVC) with 3" minimum cover in concrete. Each section of conduit shall bear the Underwriters Laboratories (UL) label.

Shift reinforcing steel in field where necessary to clear conduit and junction boxes.

Expansion fittings shall be placed as shown and set in accordance with the manufacturer's requirements and based on the air temperature at the time of setting given an estimated total expansion movement of (1) at filled joints using a maximum temperature range of 150°F and a maximum temperature of 120°F.

All end bent junction boxes shall be PVC molded in accordance with Sec 1062 and designed for flush mounting. The conduit terminations shall be permanent or separable. The terminations and covers shall be of watertight construction and shall meet requirements for NEMA 4 enclosure.

Drainage shall be provided at low points or other critical locations of all conduits and all junction boxes in accordance with Sec 707. All conduits shall be sloped to drain where possible.

Payment for furnishing and installing Conduit System, complete-in-place, will be considered completely covered by the contract lump sum price for Conduit System on Structure.

Placement of junction boxes and covers, complete-in-place, shall be flush with the roadway face of the safety barrier curb. Junction boxes and covers may be recessed up to $\frac{1}{4}$".

Additional R3, R4 & R7 bars have been included in The Bill of Reinforcing Steel as needed for the junction box placement in the Left Safety Barrier Curb.

Final location of junction boxes to be determined by the engineer.

All conduit clamps shall be commercially-available, nonmetallic conduit clamps and approved by the engineer.

All conduits not encased shall be secured to concrete with nonmetallic clamps at about 5'-0" cts. Concrete anchors for clamps shall be in accordance with Federal Specification FF-S-325, Group II, Type 4, Class I and shall be galvanized in accordance with ASTM A153, B695-91 Class 50 or stainless steel. Minimum embedment in concrete shall be $1\frac{3}{4}$". The supplier shall furnish a manufacturer's certification that the concrete anchors meet the required material and galvanizing specifications

(1) 1" at End Bent No. 1

3" at End Bent No. 2

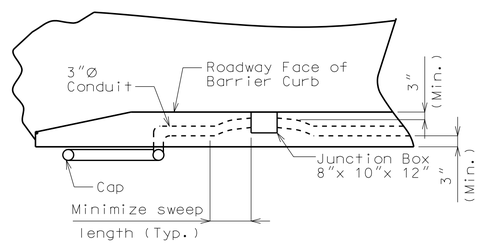


## PART PLAN SHOWING LOCATION OF JUNCTION BOX AT END BENT

(End Bent No. 1 shown, End Bent No. 2 similar)
(Right side shown, left side similar)

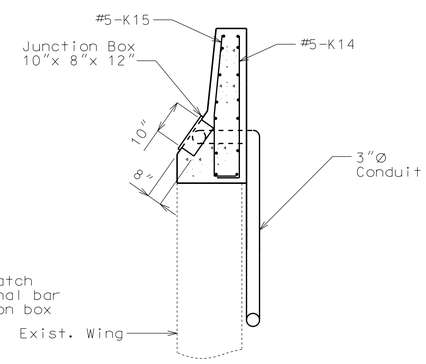


## PART SECTION B-B

(Right Barrier Curb)

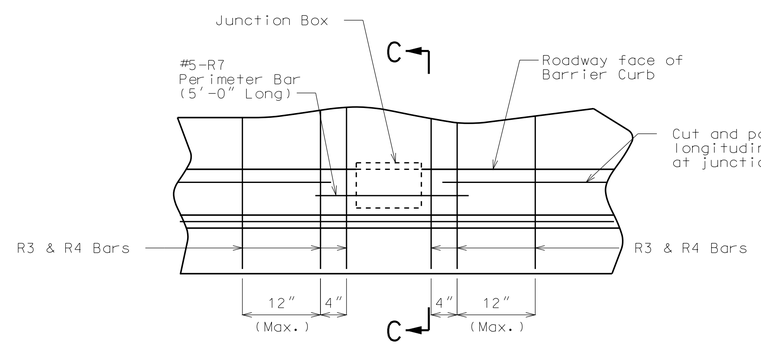


## PART PLAN SHOWING REINFORCEMENT NEAR JUNCTION BOX AT LEFT BARRIER CURB

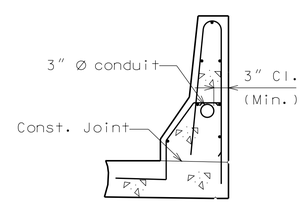


## PART SECTION A-A

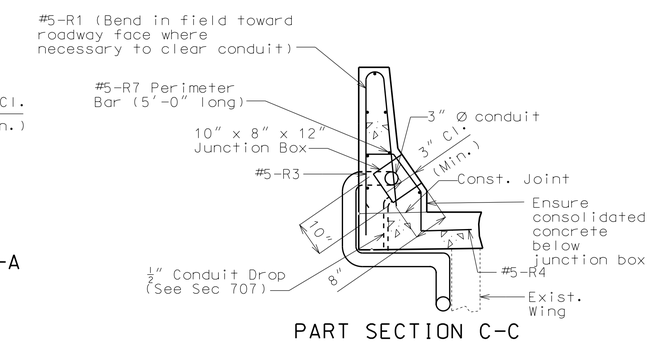


## PART SECTION C-C

(Left Barrier Curb)

# DETAILS OF CONDUIT SYSTEM ON STRUCTURE

Detailed Oct. 2012
Checked Nov. 2012

Note: This drawing is not to scale. Follow dimensions.



"THIS MEDIA SHOULD NOT BE CONSIDERED A CERTIFIED DOCUMENT."

| DATE PREPARED | |
|---|---|
| 1/17/2013 | |
| ROUTE | STATE |
| I-35 | MO |
| DISTRICT | SHEET NO. |
| BR | 9 |
| COUNTY | |
| JACKSON | |
| JOB NO. | |
| J4I2371 | |
| CONTRACT ID. | |
| PROJECT NO. | |
| BRIDGE NO. | |
| L07816 | |

| DATE | DESCRIPTION |
|---|---|
| | |

IF A SEAL IS PRESENT ON THIS SHEET IT HAS BEEN ELECTRONICALLY SEALED AND DATED.

MISSOURI HIGHWAYS AND TRANSPORTATION COMMISSION

105 WEST CAPITOL
JEFFERSON CITY, MO 65102
1-888-ASK-MODOT (1-888-275-6636)

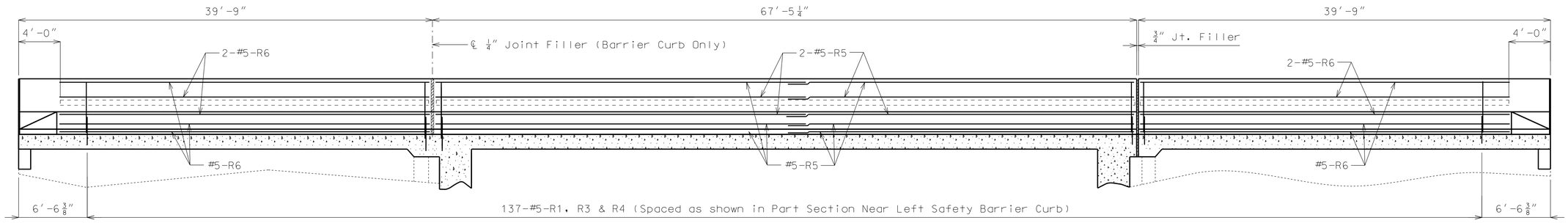


SPAN (1-2)

## SECTION NEAR LEFT SAFETY BARRIER CURB

Note: Longitudinal dimensions are horizontal.
Conduit not shown for clarity.

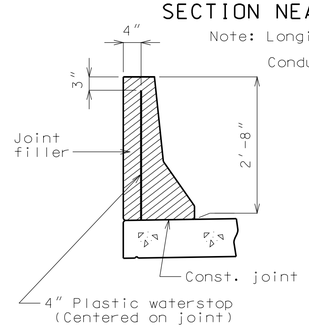


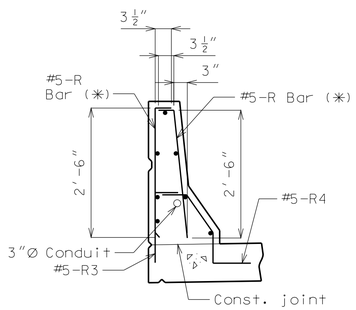


## R-BAR PERMISSIBLE ALTERNATE SHAPE

(*) The R1 bar may be separated into two bars as shown, at the contractor's option, only when slip forming is not used. (All dimensions are out to out.)

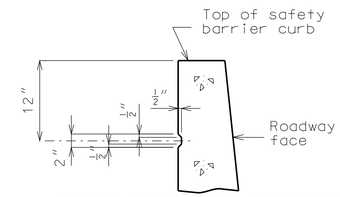


## PART SECTION SHOWING RUSTICATION DETAILS

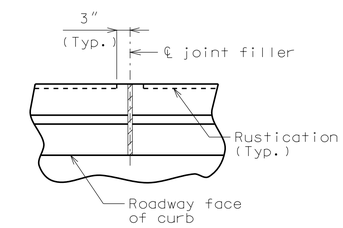


## PART PLAN SHOWING SAFETY BARRIER CURB JOINT

## DETAILS OF PLASTIC WATERSTOP

Notes:

Plastic waterstop shall be placed in all safety barrier curb filled joints, except structures with superelevation, use on all lower safety barrier curb joints only.

Cost of plastic waterstop, complete in place, will be considered completely covered by the contract unit price for Safety Barrier Curb.

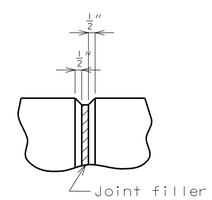


## FILLED JOINT DETAIL

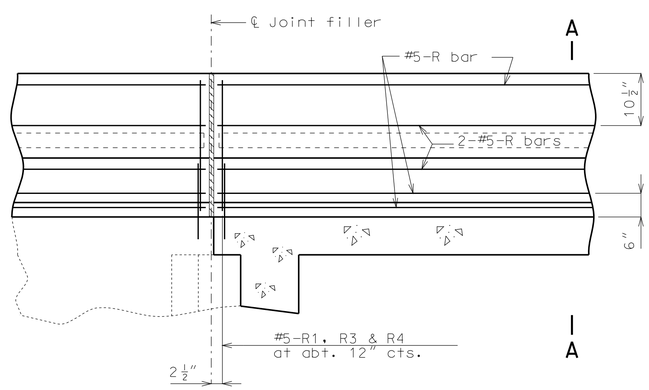


## PART SECTION NEAR LEFT SAFETY BARRIER CURB (CAST-IN-PLACE CONVENTIONAL FORMING OPTION)

Note: Conduit not shown for clarity.

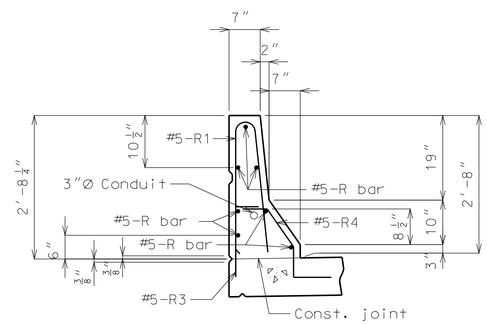


## PART SECTION A-A

Notes:

Use a minimum lap of 2'-11" for #5 horizontal safety barrier curb bars.

The cross-sectional area above the slab = 2.27 sq. ft.

Notes:

Top of safety barrier curb shall be built parallel to grade with barrier curb joints (except at end bents) normal to grade.

All exposed edges of safety barrier curb shall have either a 1/2" radius or a 3/4" bevel, unless otherwise noted.

Payment for all concrete and reinforcement, complete-in-place, will be considered completely covered by the contract unit price for safety barrier curb per linear foot.

Concrete in the safety barrier curb shall be Class B-1.

Measurement of safety barrier curb is to the nearest linear foot for each structure, measured along the outside top of slab from end of exist. wing to end of exist. wing.

Concrete traffic barrier delineators shall be placed on top of the safety barrier curb as shown on Missouri Standard Plans 617.10 and in accordance with Sec 617. Concrete traffic barrier delineators will be considered completely covered by the contract unit price for "Safety Barrier Curb."

For details of Conduit System on Structure, see Sheet No. 9.

Detailed Oct. 2012
Checked Nov. 2012

Note: This drawing is not to scale. Follow dimensions.



"THIS MEDIA SHOULD NOT BE CONSIDERED A CERTIFIED DOCUMENT."

| | |
|---|---|
| DATE PREPARED | 1/17/2013 |
| ROUTE | I-35 |
| STATE | MO |
| DISTRICT | BR |
| SHEET NO. | 10 |
| COUNTY | JACKSON |
| JOB NO. | J4I2371 |
| CONTRACT ID. | |
| PROJECT NO. | |
| BRIDGE NO. | L07816 |

| DATE | DESCRIPTION |
|---|---|
| | |

MISSOURI HIGHWAYS AND TRANSPORTATION COMMISSION
105 WEST CAPITOL
JEFFERSON CITY, MO 65102
1-888-ASK-MODOT (1-888-275-6636)

IF A SEAL IS PRESENT ON THIS SHEET IT HAS BEEN ELECTRONICALLY SEALED AND DATED.

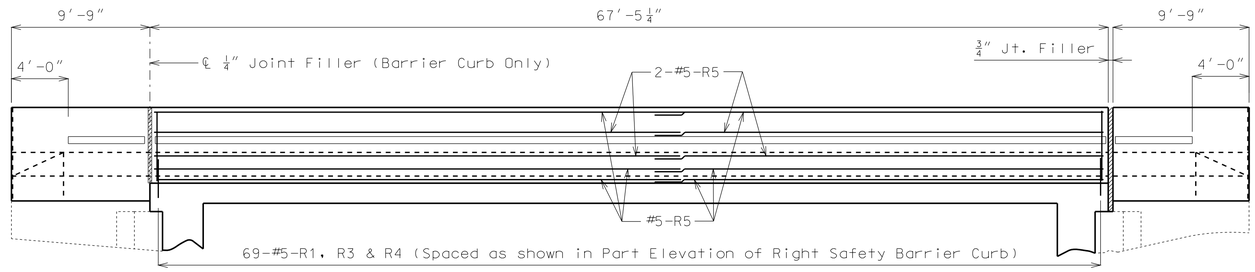


SPAN (1-2)

## ELEVATION OF RIGHT SAFETY BARRIER CURB

Note: Longitudinal dimensions are horizontal.
Conduit not shown for clarity.

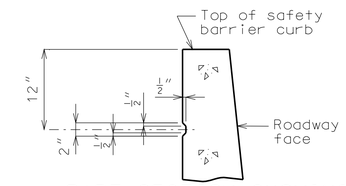


## PART SECTION SHOWING RUSTICATION DETAILS

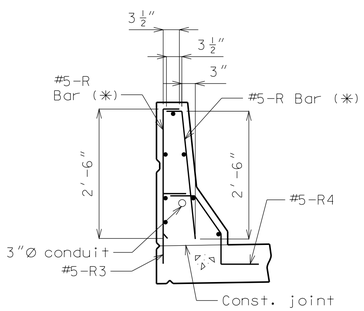


## R-BAR PERMISSIBLE ALTERNATE SHAPE

(✱) The R1 bar may be separated into two bars as shown, at the contractor's option, only when slip forming is not used. (All dimensions are out to out.)

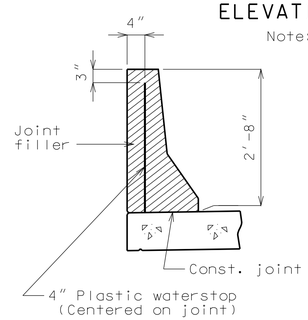


## DETAILS OF PLASTIC WATERSTOP

Notes:

Plastic waterstop shall be placed in all safety barrier curb filled joints, except structures with superelevation, use on all lower safety barrier curb joints only.

Cost of plastic waterstop, complete in place, will be considered completely covered by the contract unit price for Safety Barrier Curb.

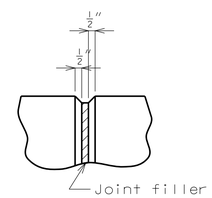


## FILLED JOINT DETAIL

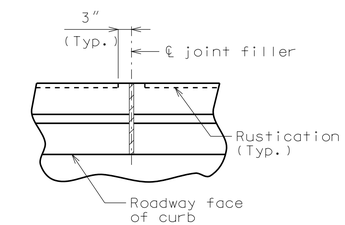


## PART PLAN SHOWING SAFETY BARRIER CURB JOINT

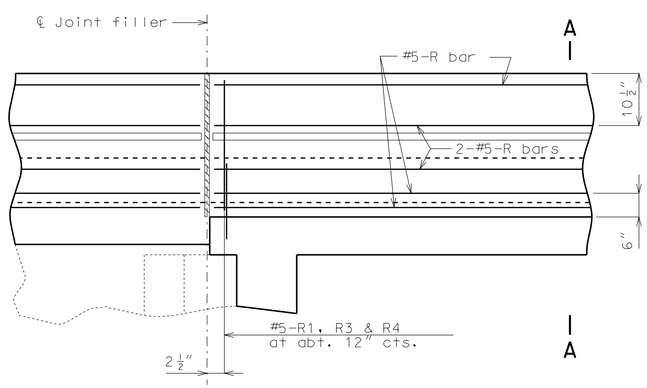


## PART ELEVATION OF RIGHT SAFETY BARRIER CURB (CAST-IN-PLACE CONVENTIONAL FORMING OPTION)

Note: Conduit not shown for clarity.

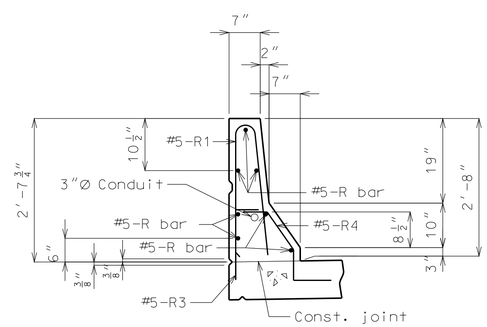


## PART SECTION A-A

Notes:

Use a minimum lap of 2'-11" for #5 horizontal safety barrier curb bars.

The cross-sectional area above the slab = 2.24 sq. ft.

Notes:

Top of safety barrier curb shall be built parallel to grade with barrier curb joints (except at end bents) normal to grade.

All exposed edges of safety barrier curb shall have either a 1/2" radius or a 3/8" bevel, unless otherwise noted.

Payment for all concrete and reinforcement, complete-in-place, will be considered completely covered by the contract unit price for safety barrier curb per linear foot.

Concrete in the safety barrier curb shall be Class B-1.

Measurement of safety barrier curb is to the nearest linear foot for each structure, measured along the outside top of slab from end of exist. wing to end of exist. wing.

Concrete traffic barrier delineators shall be placed on top of the safety barrier curb as shown on Missouri Standard Plans 617.10 and in accordance with Sec 617. Concrete traffic barrier delineators will be considered completely covered by the contract unit price for "Safety Barrier Curb."

For details of Conduit System on Structure, see Sheet No. 9.

Detailed Oct. 2012
Checked Nov. 2012

Note: This drawing is not to scale. Follow dimensions.



"THIS MEDIA SHOULD NOT BE CONSIDERED A CERTIFIED DOCUMENT."

| DATE PREPARED | |
|---|---|
| 1/17/2013 | |
| ROUTE | STATE |
| I-35 | MO |
| DISTRICT | SHEET NO. |
| BR | 11 |
| COUNTY | |
| JACKSON | |
| JOB NO. | |
| J4I2371 | |
| CONTRACT ID. | |
| PROJECT NO. | |
| BRIDGE NO. | |
| L07816 | |

DESCRIPTION

DATE

MISSOURI HIGHWAYS AND TRANSPORTATION COMMISSION
105 WEST CAPITOL
JEFFERSON CITY, MO 65102
1-888-ASK-MODOT (1-888-275-6636)

IF A SEAL IS PRESENT ON THIS SHEET IT HAS BEEN ELECTRONICALLY SEALED AND DATED.

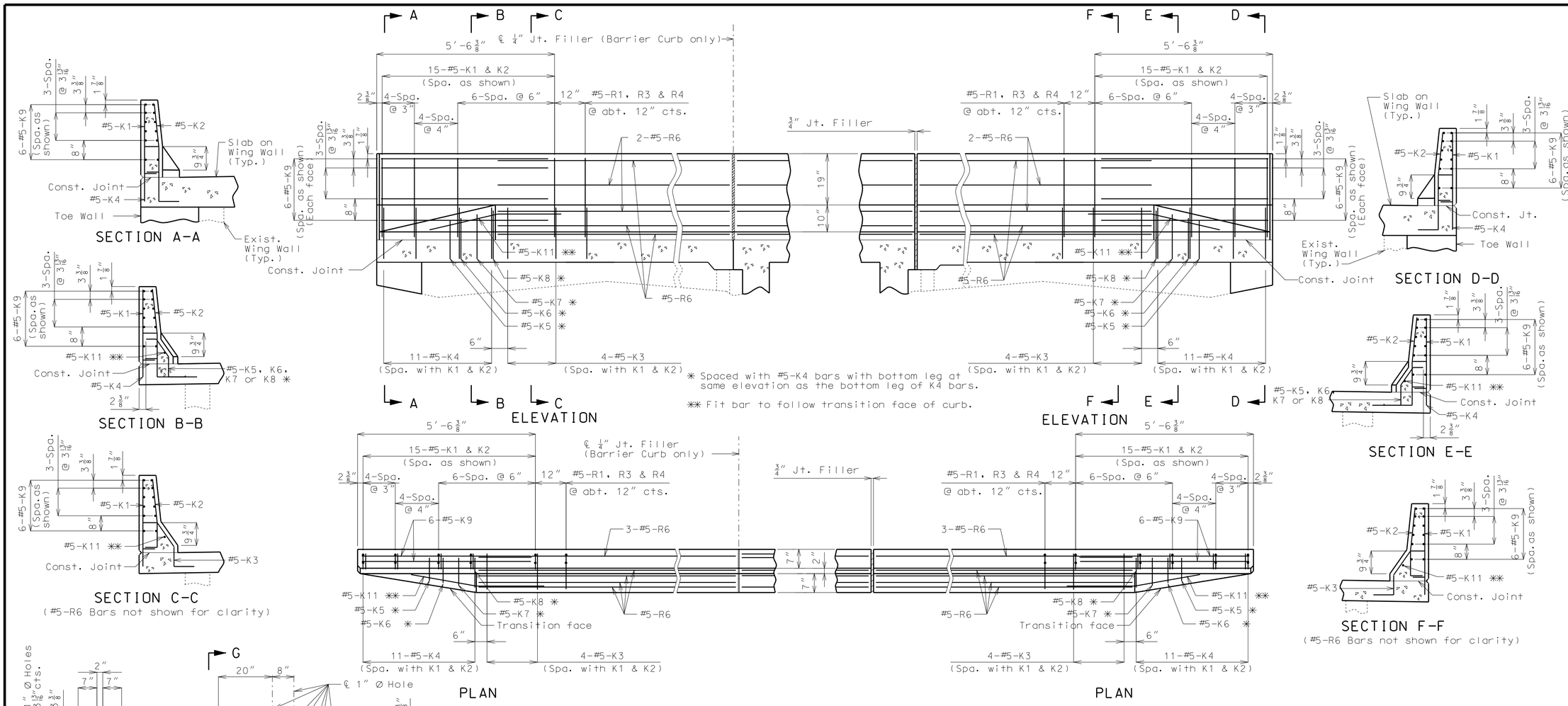


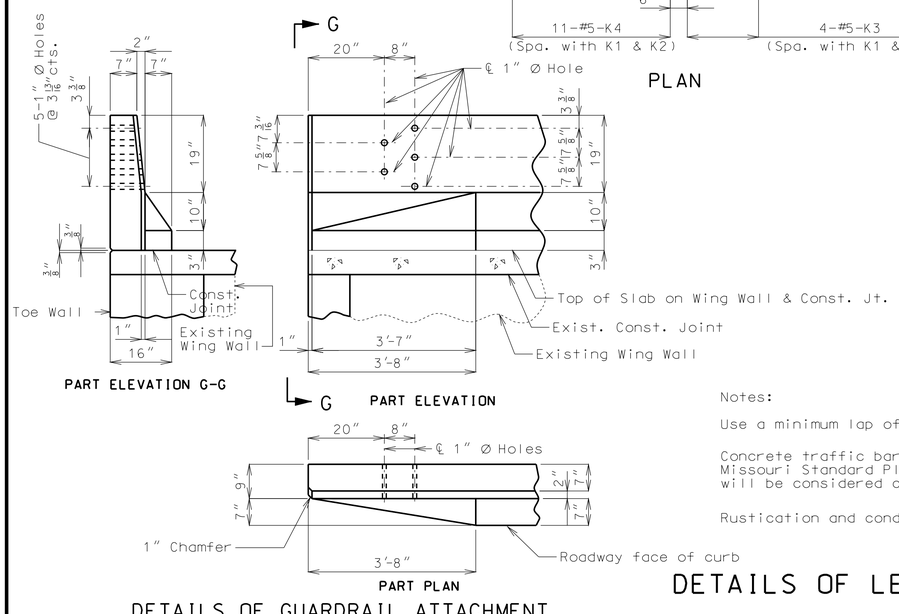


DETAILS OF GUARDRAIL ATTACHMENT

Notes:

Use a minimum lap of 2'-11" between K9 and R6 bars.

Concrete traffic barrier delineators shall be placed on top of the safety barrier curb as shown on Missouri Standard Plans 617.10 and in accordance with Sec 617. Concrete traffic barrier delineators will be considered completely covered by the contract unit price for "Safety Barrier Curb)."

Rustication and conduit not shown for clarity.

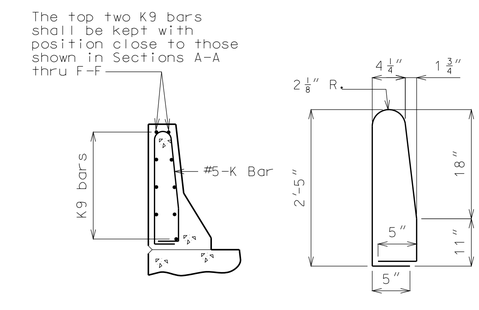


(K3 or K4 thru K8 bars not shown for clarity)

K1-K2 BAR PERMISSIBLE ALTERNATE SHAPE (***)

(***) The K1 and K2 bar combination may be furnished as one bar as shown, at the contractor's option.

# DETAILS OF LEFT SAFETY BARRIER CURB AT END BENTS

Detailed Oct. 2012
Checked Nov. 2012

Note: This drawing is not to scale. Follow dimensions.



"THIS MEDIA SHOULD NOT BE CONSIDERED A CERTIFIED DOCUMENT."

| | |
|---|---|
| DATE PREPARED | 1/17/2013 |
| ROUTE | I-35 |
| STATE | MO |
| DISTRICT | BR |
| SHEET NO. | 12 |
| COUNTY | JACKSON |
| JOB NO. | J4I2371 |
| CONTRACT ID. | |
| PROJECT NO. | |
| BRIDGE NO. | L07816 |

DESCRIPTION

DATE

MISSOURI HIGHWAYS AND TRANSPORTATION COMMISSION
105 WEST CAPITOL
JEFFERSON CITY, MO 65102
1-888-ASK-MODOT (1-888-275-6636)

IF A SEAL IS PRESENT ON THIS SHEET IT HAS BEEN ELECTRONICALLY SEALED AND DATED.

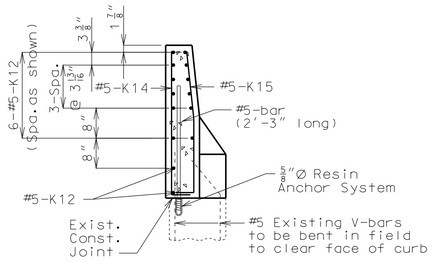


SECTION A-A

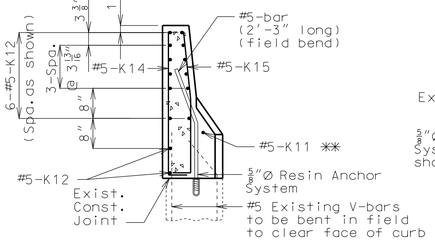


SECTION B-B

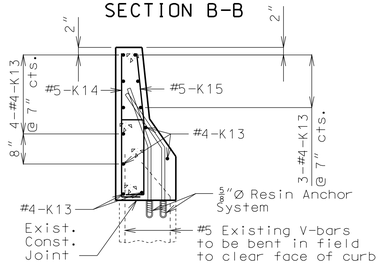


SECTION C-C

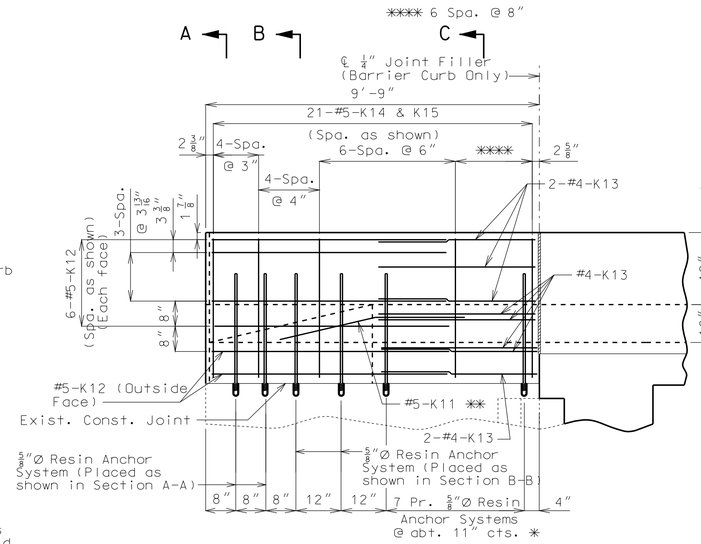


ELEVATION

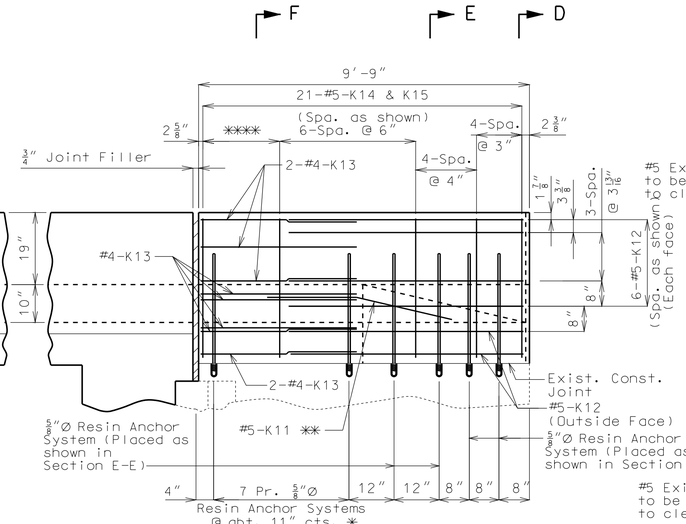


ELEVATION

✱ Space Resin Anchor Systems to avoid conduit junction box. See Sheet No. 9.

✱✱ Fit bar to follow transition face of curb.

R bars not shown for clarity.

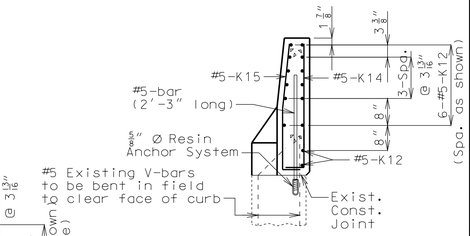


SECTION D-D

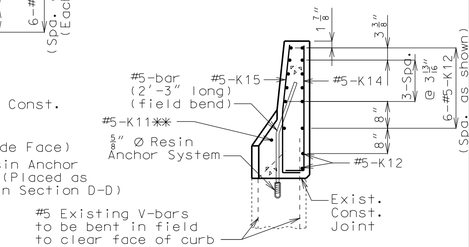


SECTION E-E

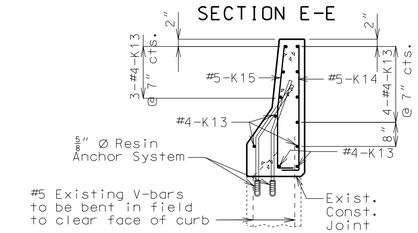


SECTION F-F

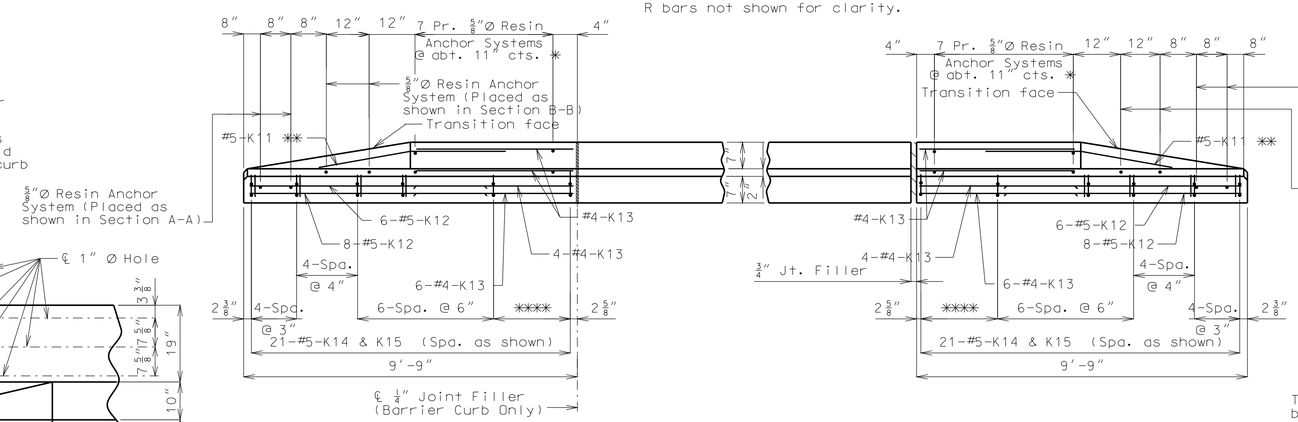


PLAN

PLAN




PART ELEVATION G-G

PART ELEVATION

PART PLAN

DETAILS OF GUARDRAIL ATTACHMENT

Notes:

Use a minimum lap of 2'-0" between K12 and K13 bars.

Rustication and conduit not shown for clarity.

Concrete traffic barrier delineators shall be placed on top of the safety barrier curb as shown on Missouri Standard Plans 617.10 and in accordance with Sec 617. Concrete traffic barrier delineators will be considered completely covered by the contract unit price for "Safety Median Barrier Curb (Type C) (Type D)."

The contractor shall use one of the qualified resin anchor systems in accordance with Sec 1039.

Cost of furnishing and installing the resin anchor system complete-in-place will be considered completely covered by the contract unit price for Safety Barrier Curb.

The minimum embedment depth in concrete with f'c = 4,000 psi for the resin anchor system shall be that required to meet the minimum ultimate pullout strength in accordance with Sec 1039 but shall not be less than 5".

An epoxy coated #5 Grade 60 reinforcing bar 2'-3" long shall be substituted for the 5/8"Ø threaded rod.

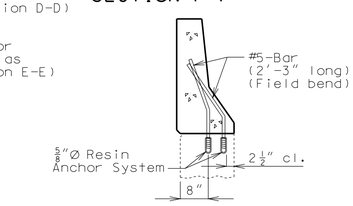


ANCHOR SYSTEMS AT SECTIONS C-C & F-F

The top two K12 or K13 bars shall be kept with position close to those shown in Sections A-A thru F-F.

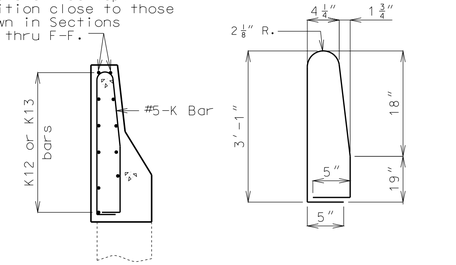


K14-K15 BAR PERMISSIBLE ALTERNATE SHAPE (✱✱✱)

(✱✱✱) The K14 & K15 bar combinations may be furnished as one bar as shown, at the contractor's option.

DETAILS OF RIGHT SAFETY BARRIER CURB AT END BENTS

Detailed Oct. 2012
Checked Nov. 2012

Note: This drawing is not to scale. Follow dimensions.



"THIS MEDIA SHOULD NOT BE CONSIDERED A CERTIFIED DOCUMENT."

| DATE PREPARED | |
|---|---|
| 1/17/2013 | |
| ROUTE | STATE |
| I-35 | MO |
| DISTRICT | SHEET NO. |
| BR | 13 |
| COUNTY | |
| JACKSON | |
| JOB NO. | |
| J4I2371 | |
| CONTRACT ID. | |
| PROJECT NO. | |
| BRIDGE NO. | |
| L07816 | |

| DATE | DESCRIPTION |
|---|---|
| | |

MISSOURI HIGHWAYS AND TRANSPORTATION COMMISSION
105 WEST CAPITOL
JEFFERSON CITY, MO 65102
1-888-ASK-MODOT (1-888-275-6636)

IF A SEAL IS PRESENT ON THIS SHEET IT HAS BEEN ELECTRONICALLY SEALED AND DATED.

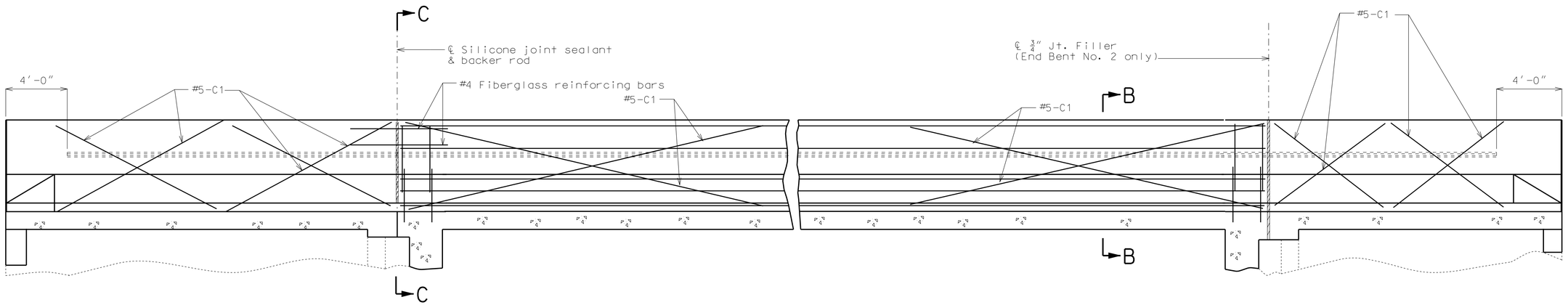


TYPICAL SECTION NEAR LEFT SAFETY BARRIER CURB AT SUPPORT LOCATIONS
(OPTIONAL SLIP-FORM BRIDGE SAFETY BARRIER CURB)

Notes:

Top of safety barrier curb shall be built parallel to grade with barrier curb joints (except at end bents) normal to grade.

Payment for all concrete and reinforcement, complete in place, will be considered completely covered by the contract unit price for safety barrier curb per linear foot.

Concrete in the safety barrier curb shall be Class B-1.

Measurement of safety barrier curb is to the nearest linear foot for each structure, measured along the outside top of slab from end of exist. wing to end of exist. wing.

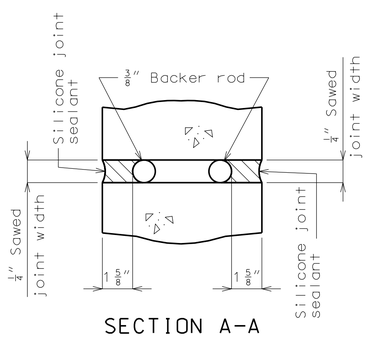


SECTION A-A

Notes:

Joint sealant and backer rods shall be used on all slip-form barrier curbs instead of joint filler at End bent No. 1 only and shall be in accordance with Sec 717 for silicone joint sealant for saw cut and formed joints.

Plastic waterstop shall not be used with slip-form option.

C Bars (Slip-form option only) shall be used in addition to cast-in-place conventional forming reinforcement for bridge safety barrier curb.

For Slip-Form option, all sides of the safety barrier curb shall have a vertically broomed finish and the curb top shall have a transversely broomed finish.

Concrete traffic barrier delineators shall be placed on top of the safety barrier curb as shown on Missouri Standard Plans 617.10 and in accordance with Sec 617. Concrete traffic barrier delineators will be considered completely covered by the contract unit price for "Safety Barrier Curb".

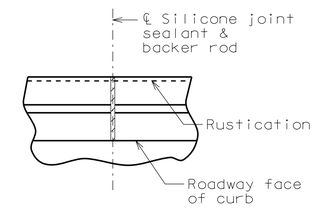


PART PLAN SHOWING SAFETY BARRIER CURB JOINT

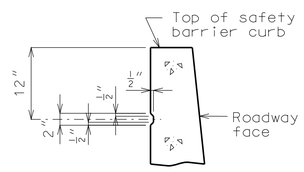


PART SECTION SHOWING RUSTICATION DETAILS

RUSTICATION DETAIL

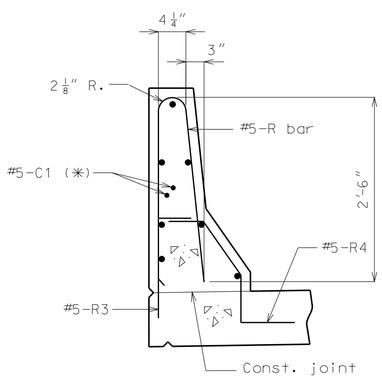


Notes:
(✳) Each side of joint location.

PART SECTION B-B

Note:

Cost of silicone joint sealant and backer rod, complete in place, will be considered completely covered by the contract unit price for Safety Barrier Curb.

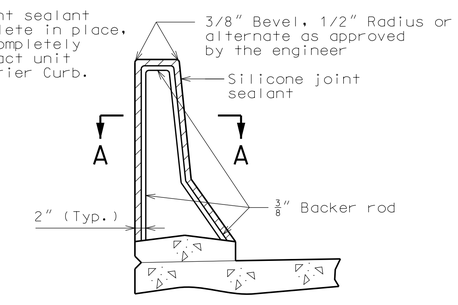


SECTION THRU JOINT

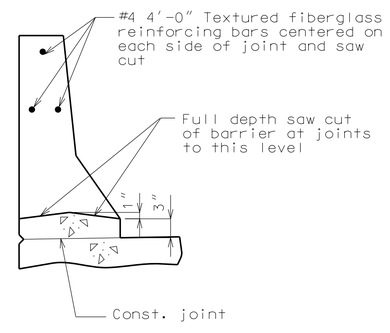


PART SECTION C-C

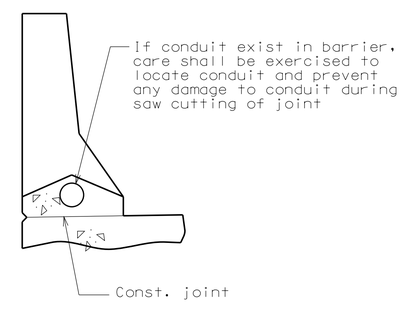


PART SECTION C-C
(Use when conduit required)

OPTIONAL SLIP-FORM BRIDGE SAFETY BARRIER CURB

Detailed Oct. 2012
Checked Nov. 2012

Note: This drawing is not to scale. Follow dimensions.



"THIS MEDIA SHOULD NOT BE CONSIDERED A CERTIFIED DOCUMENT."

| | |
|---|---|
| DATE PREPARED | 1/17/2013 |
| ROUTE | I-35 |
| STATE | MO |
| DISTRICT | BR |
| SHEET NO. | 14 |
| COUNTY | JACKSON |
| JOB NO. | J4I2371 |
| CONTRACT ID. | |
| PROJECT NO. | |
| BRIDGE NO. | L07816 |

DESCRIPTION

DATE

MISSOURI HIGHWAYS AND TRANSPORTATION COMMISSION
105 WEST CAPITOL
JEFFERSON CITY, MO 65102
1-888-ASK-MODOT (1-888-275-6636)

IF A SEAL IS PRESENT ON THIS SHEET IT HAS BEEN ELECTRONICALLY SEALED AND DATED.

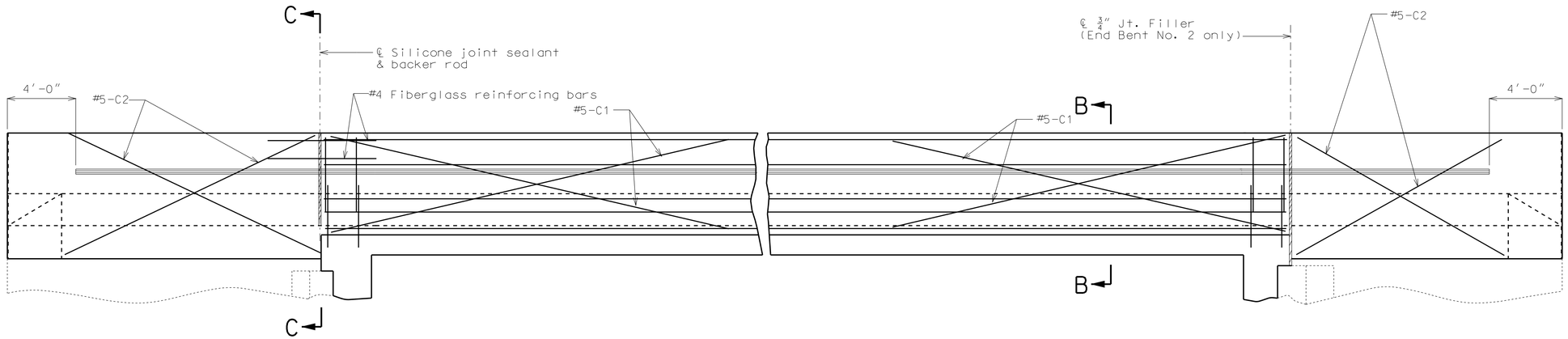


TYPICAL ELEVATION OF RIGHT SAFETY BARRIER CURB AT SUPPORT LOCATIONS
(OPTIONAL SLIP-FORM BRIDGE SAFETY BARRIER CURB)

Notes:

Top of safety barrier curb shall be built parallel to grade with barrier curb joints (except at end bents) normal to grade.

Payment for all concrete and reinforcement, complete in place, will be considered completely covered by the contract unit price for safety barrier curb per linear foot.

Concrete in the safety barrier curb shall be Class B-1.

Measurement of safety barrier curb is to the nearest linear foot for each structure, measured along the outside top of slab from end of exist. wing to end of exist. wing.

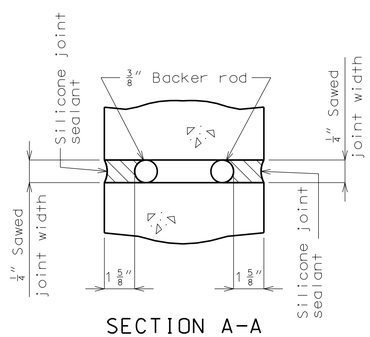


SECTION A-A

Notes:

Joint sealant and backer rods shall be used on all slip-form barrier curbs instead of joint filler at End Bent No.1 only and shall be in accordance with Sec 717 for silicone joint sealant for saw cut and formed joints.

Plastic waterstop shall not be used with slip-form option.

C Bars (Slip-form option only) shall be used in addition to cast-in-place conventional forming reinforcement for bridge safety barrier curb.

For Slip-Form option, all sides of the safety barrier curb shall have a vertically broomed finish and the curb top shall have a transversely broomed finish.

Concrete traffic barrier delineators shall be placed on top of the safety barrier curb as shown on Missouri Standard Plans 617.10 and in accordance with Sec 617. Concrete traffic barrier delineators will be considered completely covered by the contract unit price for "Safety Barrier Curb".

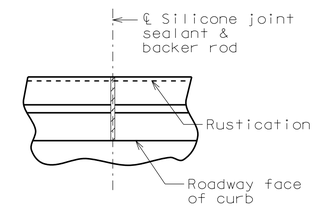


PART PLAN SHOWING SAFETY BARRIER CURB JOINT

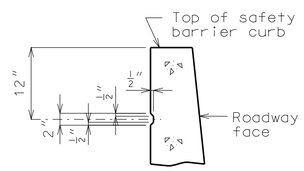


PART SECTION SHOWING RUSTICATION DETAILS

RUSTICATION DETAIL

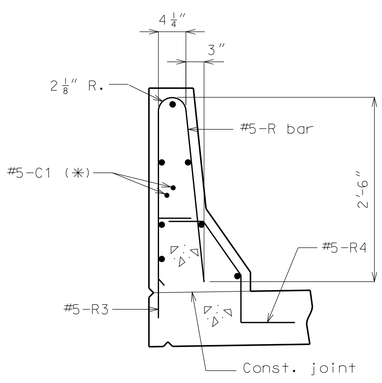


Notes:
(✳) Each side of joint location.

PART SECTION B-B

Note:

Cost of silicone joint sealant and backer rod, complete in place, will be considered completely covered by the contract unit price for Safety Barrier Curb.

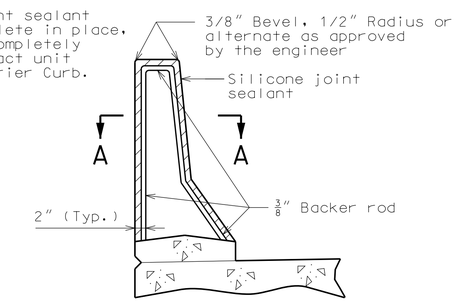


SECTION THRU JOINT

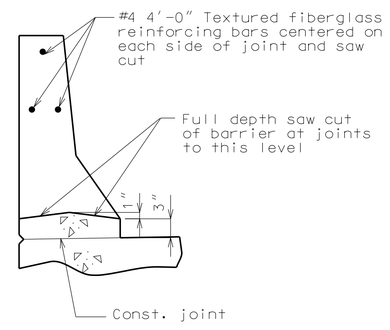


PART SECTION C-C

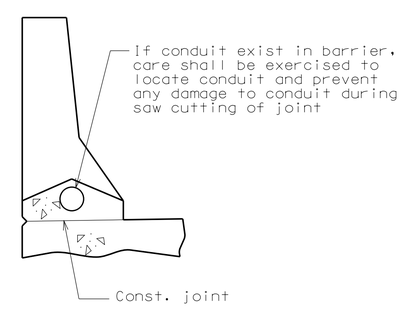


PART SECTION C-C
(Use when conduit required)

OPTIONAL SLIP-FORM BRIDGE SAFETY BARRIER CURB

Detailed Oct. 2012
Checked Nov. 2012

Note: This drawing is not to scale. Follow dimensions.



"THIS MEDIA SHOULD NOT BE CONSIDERED A CERTIFIED DOCUMENT."

| | |
|---|---|
| DATE PREPARED | 1/17/2013 |
| ROUTE | I-35 |
| STATE | MO |
| DISTRICT | BR |
| SHEET NO. | 15 |
| COUNTY | JACKSON |
| JOB NO. | J4I2371 |
| CONTRACT ID. | |
| PROJECT NO. | |
| BRIDGE NO. | L07816 |

DESCRIPTION

DATE

IF A SEAL IS PRESENT ON THIS SHEET IT HAS BEEN ELECTRONICALLY SEALED AND DATED.

MISSOURI HIGHWAYS AND TRANSPORTATION COMMISSION
105 WEST CAPITOL
JEFFERSON CITY, MO 65102
1-888-ASK-MODOT (1-888-275-6636)

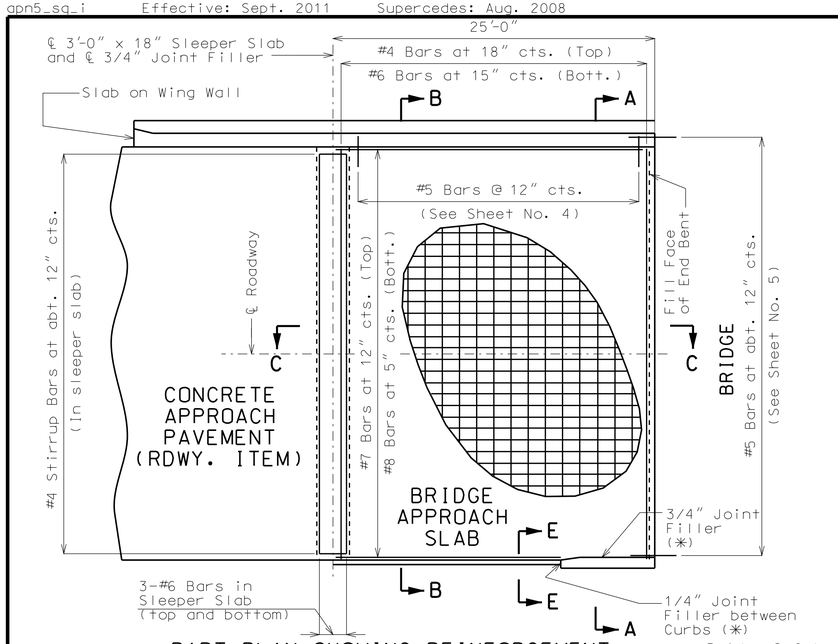


PART PLAN SHOWING REINFORCEMENT

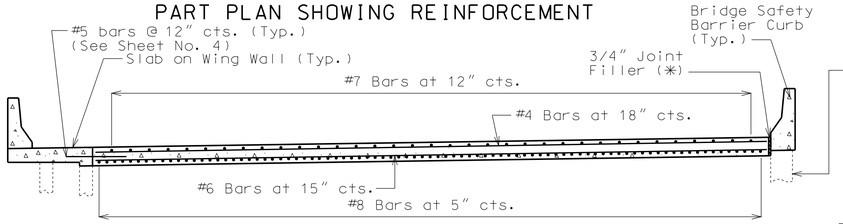


SECTION A-A

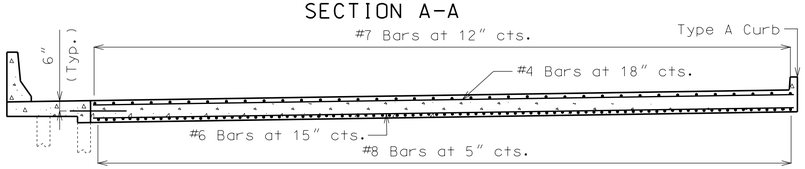


SECTION B-B

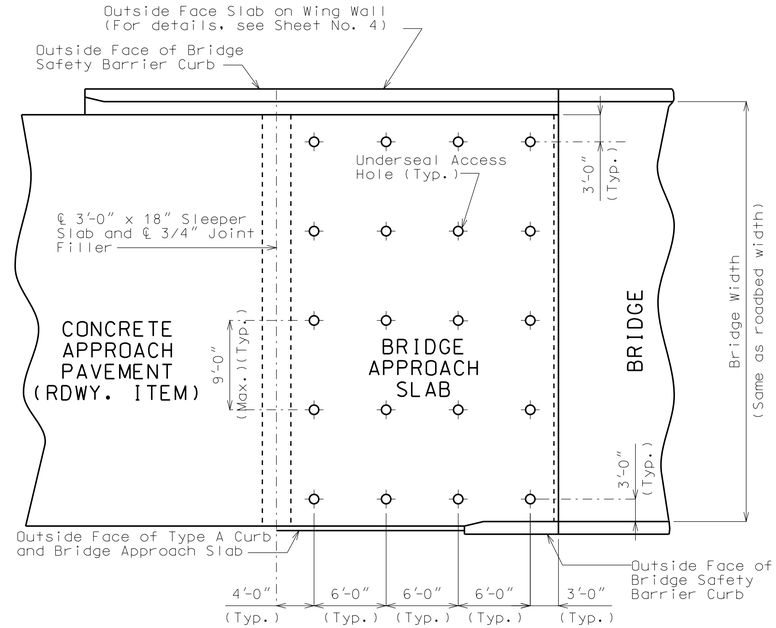


PART PLAN
(SHOWING TYPICAL UNDERSEAL ACCESS HOLE LOCATIONS)

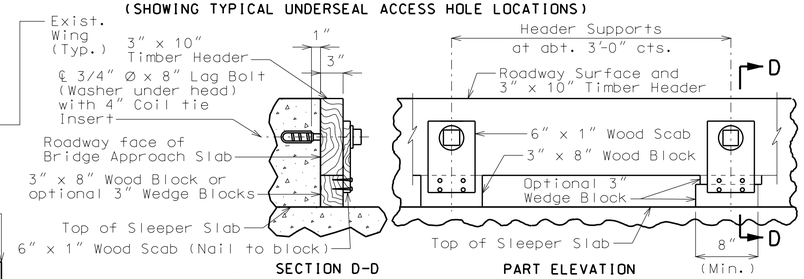


SECTION D-D PART ELEVATION

Note: Remove timber header when concrete pavement is placed.

DETAILS OF TIMBER HEADER

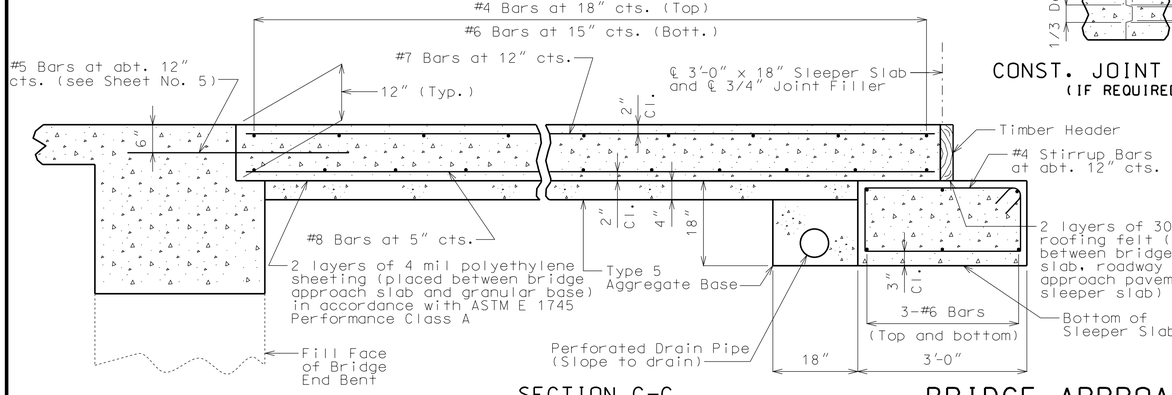


SECTION C-C

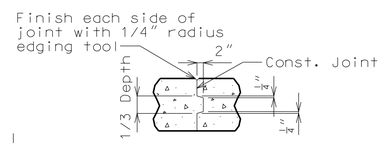


CONST. JOINT DETAIL
(IF REQUIRED)

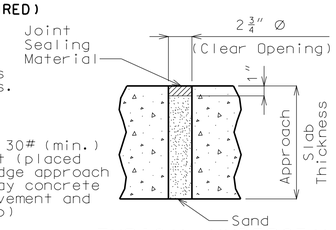


TYPICAL UNDERSEAL ACCESS HOLE DETAIL

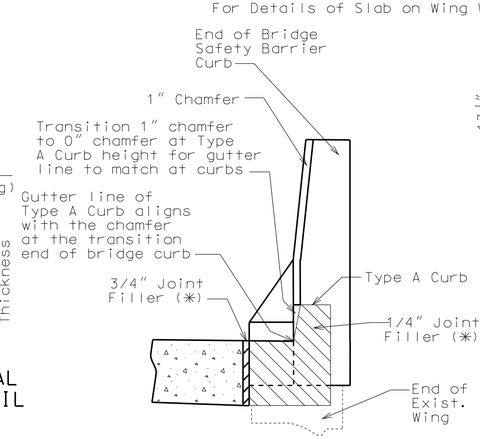


SECTION E-E
(BETWEEN RIGHT CURBS)

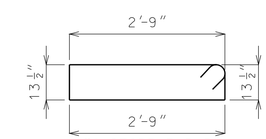


#4 STIRRUP BAR
(ACTUAL LENGTH = 8'-3")

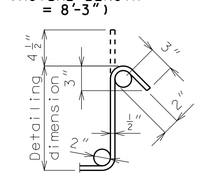


TYPICAL 135° STIRRUP HOOK DIMENSIONS BENDING DIAGRAM

Note: Nominal lengths are based on out to out dimensions shown in bending diagram and are listed for fabricators use (nearest inch).

## GENERAL NOTES:

All concrete for the bridge approach slab and sleeper slab shall be in accordance with Sec 503 (f'c = 4,000 psi).

All joint filler shall be in accordance with Sec 1057 for preformed fiber expansion joint filler, except as noted.

The reinforcing steel in the bridge approach slab and the sleeper slab shall be epoxy coated Grade 60 with Fy = 60,000 psi.

Minimum clearance to reinforcing steel shall be 1 1/2", unless otherwise shown.

The reinforcing steel in the bridge approach slab and the sleeper slab shall be continuous. The transverse reinforcing steel may be made continuous by lap splicing the #4 & #6 bars 18" and 2'-2", respectively.

Mechanical bar splices shall be in accordance with Sec 706.

(✱) Seal joint between vertical face of approach slab and exist. wing with "Silicone Joint Sealant for Saw Cut and Formed Joints" in accordance with Sec 717.

Hooks and bends shall be in accordance with the CRSI Manual of Standard Practice for Detailing Reinforced Concrete Structures, Stirrup and Tie Dimensions.

The contractor shall pour and satisfactorily finish the bridge or semi-deep slab before pouring the bridge approach slabs.

Longitudinal construction joints in approach slab and sleeper slab shall be aligned with longitudinal construction joints in bridge or semi-deep slab.

Payment for furnishing all materials, labor and excavation necessary to construct the approach slab, including the timber header, sleeper slab, underdrain, Type 5 aggregate base, joint filler and all other appurtenances and incidental work as shown on this sheet, complete in place, will be considered completely covered by the contract unit price for Bridge Approach Slab (Bridge) per square yard.

For Concrete Approach Pavement details, see roadway plans.

See Missouri Standard Plans Drawing 609.00 for details of Type A Curb.

At the contractor's option, Grade 40 reinforcement may be substituted for the Grade 60 #5 dowel bars connecting the bridge approach slab to the bridge abutment. No additional payment will be made for this substitution.

When Grade 40 reinforcement is substituted for the Grade 60 #5 dowel bars connecting the bridge approach slab to the bridge abutment, the reinforcement may be bent up to 90 degrees with a 2" minimum radius near the abutment to allow compaction of the backfill material near the abutment. Damage to epoxy coating shall be repaired in accordance with Sec 710.

Drain pipe may be either 6" diameter corrugated metallic-coated pipe underdrain, 4" diameter corrugated polyvinyl chloride (PVC) drain pipe, or 4" diameter corrugated polyethylene (PE) drain pipe.

For Details of Slab on Wing Wall, see Sheet No. 4.

"THIS MEDIA SHOULD NOT BE CONSIDERED A CERTIFIED DOCUMENT."

| DATE PREPARED | |
|---|---|
| 1/17/2013 | |
| ROUTE I-35 | STATE MO |
| DISTRICT BR | SHEET NO. 16 |
| COUNTY JACKSON | |
| JOB NO. J4I2371 | |
| CONTRACT ID. | |
| PROJECT NO. | |
| BRIDGE NO. L07816 | |

| DATE | DESCRIPTION |
|---|---|
| | |

MISSOURI HIGHWAYS AND TRANSPORTATION COMMISSION
105 WEST CAPITOL
JEFFERSON CITY, MO 65102
1-888-ASK-MODOT (1-888-275-6636)

IF A SEAL IS PRESENT ON THIS SHEET IT HAS BEEN ELECTRONICALLY SEALED AND DATED.

Detailed Oct. 2012
Checked Nov. 2012

Note: This drawing is not to scale. Follow dimensions.



# BRIDGE APPROACH SLAB @ END BENT NO. 1

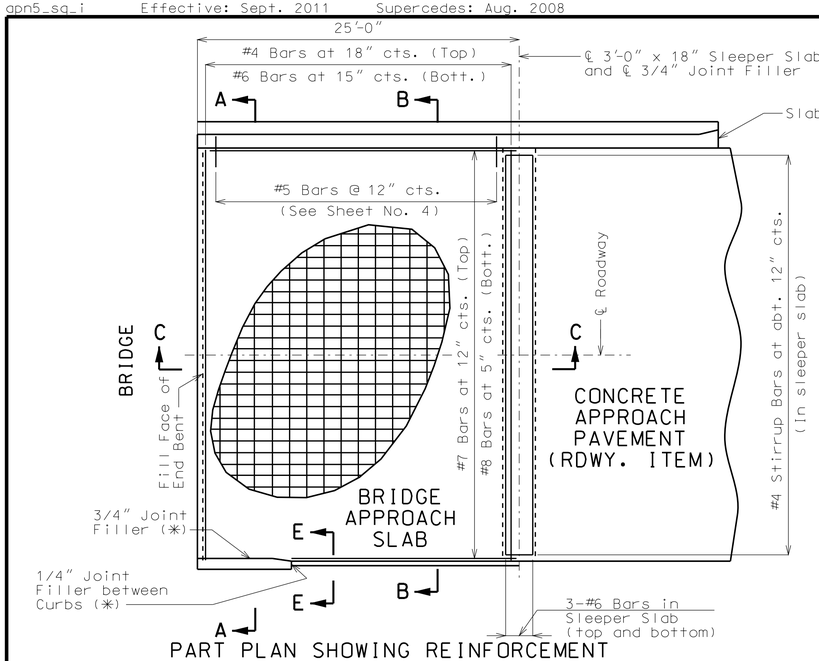


PART PLAN SHOWING REINFORCEMENT

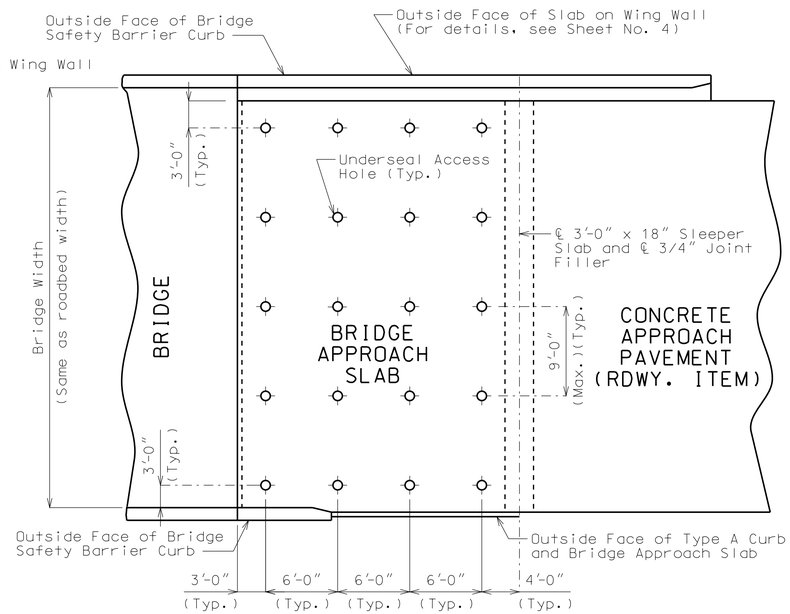


PART PLAN
(SHOWING TYPICAL UNDERSEAL ACCESS HOLE LOCATIONS)

## GENERAL NOTES:

All concrete for the bridge approach slab and sleeper slab shall be in accordance with Sec 503 (f'c = 4,000 psi).

All joint filler shall be in accordance with Sec 1057 for preformed fiber expansion joint filler, except as noted.

The reinforcing steel in the bridge approach slab and the sleeper slab shall be epoxy coated Grade 60 with Fy = 60,000 psi.

Minimum clearance to reinforcing steel shall be 1 1/2", unless otherwise shown.

The reinforcing steel in the bridge approach slab and the sleeper slab shall be continuous. The transverse reinforcing steel may be made continuous by lap splicing the #4 & #6 bars 18" and 2'-2", respectively.

Mechanical bar splices shall be in accordance with Sec 706.

(✳) Seal joint between vertical face of approach slab and exist. wing with "Silicone Joint Sealant for Saw Cut and Formed Joints" in accordance with Sec 717.

Hooks and bends shall be in accordance with the CRSI Manual of Standard Practice for Detailing Reinforced Concrete Structures, Stirrup and Tie Dimensions.

The contractor shall pour and satisfactorily finish the bridge or semi-deep slab before pouring the bridge approach slabs.

Longitudinal construction joints in approach slab and sleeper slab shall be aligned with longitudinal construction joints in bridge or semi-deep slab.

Payment for furnishing all materials, labor and excavation necessary to construct the approach slab, including the timber header, sleeper slab, underdrain, Type 5 aggregate base, joint filler and all other appurtenances and incidental work as shown on this sheet, complete in place, will be considered completely covered by the contract unit price for Bridge Approach Slab (Bridge) per square yard.

For Concrete Approach Pavement details, see roadway plans.

See Missouri Standard Plans Drawing 609.00 for details of Type A Curb.

At the contractor's option, Grade 40 reinforcement may be substituted for the Grade 60 #5 dowel bars connecting the bridge approach slab to the bridge abutment. No additional payment will be made for this substitution.

When Grade 40 reinforcement is substituted for the Grade 60 #5 dowel bars connecting the bridge approach slab to the bridge abutment, the reinforcement may be bent up to 90 degrees with a 2" minimum radius near the abutment to allow compaction of the backfill material near the abutment. Damage to epoxy coating shall be repaired in accordance with Sec 710.

Drain pipe may be either 6" diameter corrugated metallic-coated pipe underdrain, 4" diameter corrugated polyvinyl chloride (PVC) drain pipe, or 4" diameter corrugated polyethylene (PE) drain pipe.

For Details of Slab on Wing Wall, see Sheet No. 4.

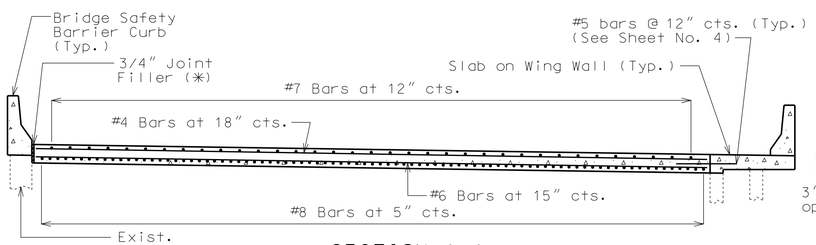


SECTION A-A

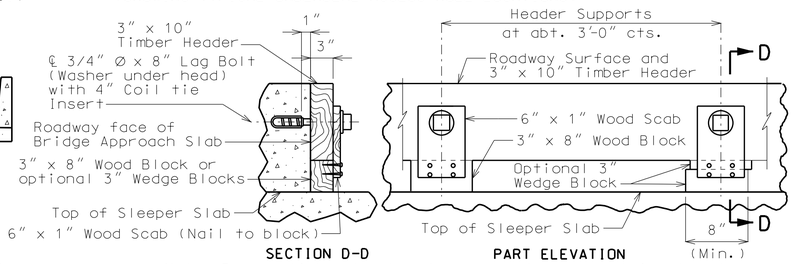


SECTION D-D PART ELEVATION

Note: Remove timber header when concrete pavement is placed.

DETAILS OF TIMBER HEADER

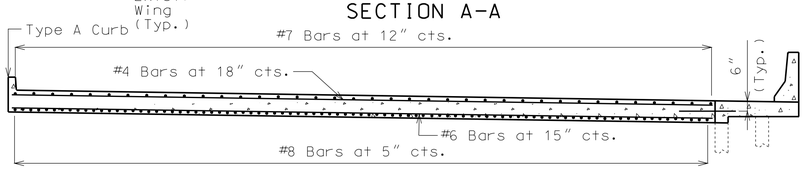


SECTION B-B

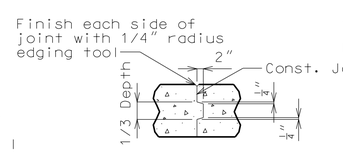


CONST. JOINT DETAIL
(IF REQUIRED)

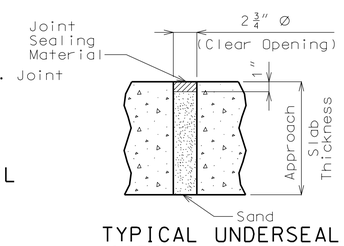


TYPICAL UNDERSEAL ACCESS HOLE DETAIL

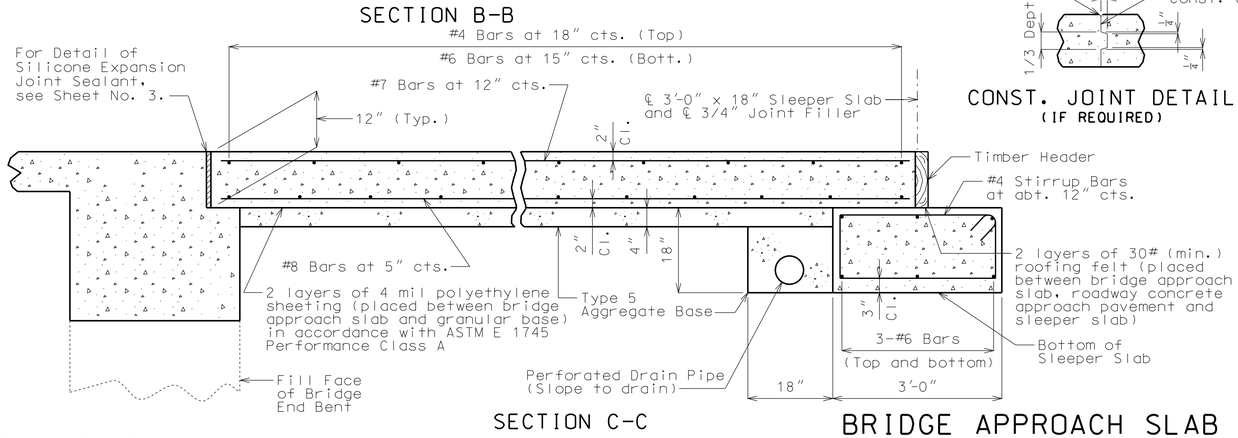


SECTION C-C

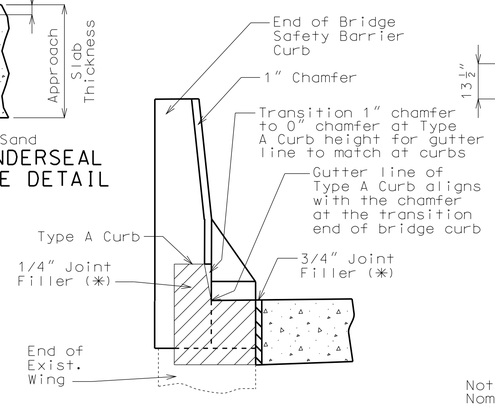


SECTION E-E
(BETWEEN RIGHT CURBS)

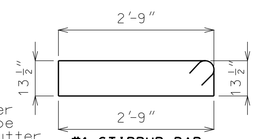


#4 STIRRUP BAR
(ACTUAL LENGTH = 8'-3")

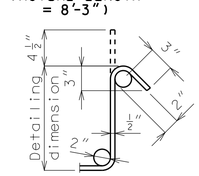


TYPICAL 135° STIRRUP HOOK DIMENSIONS BENDING DIAGRAM

Note: Nominal lengths are based on out to out dimensions shown in bending diagram and are listed for fabricators use (nearest inch).

Detailed Oct. 2012
Checked Nov. 2012

Note: This drawing is not to scale. Follow dimensions.

# BRIDGE APPROACH SLAB @ END BENT NO. 2



"THIS MEDIA SHOULD NOT BE CONSIDERED A CERTIFIED DOCUMENT."

| DATE PREPARED | |
|---|---|
| 1/17/2013 | |
| ROUTE | STATE |
| I-35 | MO |
| DISTRICT | SHEET NO. |
| BR | 17 |
| COUNTY | |
| JACKSON | |
| JOB NO. | |
| J4I2371 | |
| CONTRACT ID. | |
| PROJECT NO. | |
| BRIDGE NO. | |
| L07816 | |

DESCRIPTION

DATE

MISSOURI HIGHWAYS AND TRANSPORTATION COMMISSION
105 WEST CAPITOL
JEFFERSON CITY, MO 65102
1-888-ASK-MODOT (1-888-275-6636)

IF A SEAL IS PRESENT ON THIS SHEET IT HAS BEEN ELECTRONICALLY SEALED AND DATED.

# BILL OF REINFORCING STEEL

| NO. REQ'D. | MARK NO. SIZE | MARK NO. MARK | LOCATION | EPOXY (E) | SHAPE NO. | STIRRUP (S) | SUBSTR. (X) | VARIES (V) | NO. EACH | B FT. IN. | C FT. IN. | D FT. IN. | E FT. IN. | F FT. IN. | H FT. IN. | K FT. IN. | NOMINAL LENGTH FT. IN. | ACTUAL LENGTH FT. IN. | WEIGHT LBS. |
|---|---|---|---|---|---|---|---|---|---|---|---|---|---|---|---|---|---|---|---|
| | | | END BENT 1 | | | | | | | | | | | | | | | | |
| 5 | 6 | H10 | DIAPHRAGM | E | 20 | | | | | 34 8.000 | | | | | | | 34 8 | 34 8 | 260 |
| 5 | 6 | H11 | DIAPHRAGM | E | 20 | | | | | 28 5.000 | | | | | | | 28 5 | 28 5 | 213 |
| 10 | 6 | H12 | DIAPHRAGM | E | 11 | S | | | | | 10.000 | 2 9.000 | 4 0.000 | | | | 7 7 | 7 3 | 109 |
| 5 | 6 | H13 | DIAPHRAGM | E | 20 | | | | | 34 2.000 | | | | | | | 34 2 | 34 2 | 257 |
| 5 | 6 | H14 | DIAPHRAGM | E | 20 | | | | | 27 11.000 | | | | | | | 27 11 | 27 11 | 210 |
| 58 | 5 | H15 | APP NOTCH | E | 20 | | | | | 2 6.000 | | | | | | | 2 6 | 2 6 | 151 |
| 53 | 6 | U10 | DIAPHRAGM | E | 19 | S | | | | 3 0.000 | 5 9.000 | | | | | | 8 9 | 8 7 | 683 |
| 43 | 6 | U11 | DIAPHRAGM | E | 19 | S | | | | 4 2.000 | 3 6.000 | | | | | | 7 8 | 7 6 | 484 |
| 8 | 6 | U12 | DIAPHRAGM | E | 19 | S | | | | 3 6.000 | 3 6.000 | | | | | | 7 0 | 6 10 | 82 |
| 6 | 6 | U13 | DIAPHRAGM | E | 19 | S | | | | 8.000 | 5 9.000 | | | | | | 6 5 | 6 3 | 56 |
| 43 | 6 | U14 | DIAPHRAGM | E | 19 | S | | | | 3 10.000 | 4 0.000 | | | | | | 7 10 | 7 8 | 495 |
| 4 | 6 | U15 | DIAPHRAGM | E | 19 | S | | | | 3 2.000 | 4 0.000 | | | | | | 7 2 | 7 0 | 42 |
| | | | END BENT 2 | | | | | | | | | | | | | | | | |
| 5 | 6 | H20 | DIAPHRAGM | E | 20 | | | | | 34 8.000 | | | | | | | 34 8 | 34 8 | 260 |
| 5 | 6 | H21 | DIAPHRAGM | E | 20 | | | | | 28 5.000 | | | | | | | 28 5 | 28 5 | 213 |
| 10 | 6 | H22 | DIAPHRAGM | E | 11 | S | | | | | 10.000 | 2 9.000 | 4 0.000 | | | | 7 7 | 7 3 | 109 |
| 5 | 6 | H23 | DIAPHRAGM | E | 20 | | | | | 27 11.000 | | | | | | | 27 11 | 27 11 | 210 |
| 5 | 6 | H24 | DIAPHRAGM | E | 20 | | | | | 34 2.000 | | | | | | | 34 2 | 34 2 | 257 |
| 43 | 6 | U20 | DIAPHRAGM | E | 6 | S | | | | 2 8.000 | 4 0.000 | 4 6.000 | 3 5.000 | | | | 14 7 | 14 1 | 910 |
| 4 | 6 | U21 | DIAPHRAGM | E | 6 | S | | | | 2 8.000 | 2 9.000 | 3 11.000 | 3 5.000 | | | | 12 9 | 12 3 | 74 |
| 4 | 6 | U22 | DIAPHRAGM | E | 6 | S | | | | 2 8.000 | 4 0.000 | 3 11.000 | 3 5.000 | | | | 14 0 | 13 6 | 81 |
| 53 | 6 | U23 | DIAPHRAGM | E | 19 | S | | | | 3 0.000 | 5 9.000 | | | | | | 8 9 | 8 7 | 683 |
| 6 | 6 | U24 | DIAPHRAGM | E | 19 | S | | | | 8.000 | 5 9.000 | | | | | | 6 5 | 6 3 | 56 |
| 43 | 6 | U25 | DIAPHRAGM | E | 19 | S | | | | 4 1.000 | 4 0.000 | | | | | | 8 1 | 7 11 | 511 |
| 4 | 6 | U26 | DIAPHRAGM | E | 19 | S | | | | 3 6.000 | 4 0.000 | | | | | | 7 6 | 7 4 | 44 |
| 6 | 6 | V20 | DIAPHRAGM | E | 20 | | | | | 4 1.000 | | | | | | | 4 1 | 4 1 | 37 |
| 4 | 6 | V21 | DIAPHRAGM | E | 20 | | | | | 3 6.000 | | | | | | | 3 6 | 3 6 | 21 |
| | | | SLAB | | | | | | | | | | | | | | | | |
| 108 | 5 | S1 | SLAB | E | 20 | | | | | 35 3.000 | | | | | | | 35 3 | 35 3 | 3971 |
| 137 | 6 | S2 | SLAB | E | 20 | | | | | 30 6.000 | | | | | | | 30 6 | 30 6 | 6276 |
| 135 | 6 | S3 | SLAB | E | 20 | | | | | 32 9.000 | | | | | | | 32 9 | 32 9 | 6641 |
| 135 | 5 | S4 | SLAB | E | 20 | | | | | 30 6.000 | | | | | | | 30 6 | 30 6 | 4295 |
| 137 | 5 | S5 | SLAB | E | 20 | | | | | 32 9.000 | | | | | | | 32 9 | 32 9 | 4680 |
| 65 | 5 | S6 | SLAB | E | 20 | | | | | 60 0.000 | | | | | | | 60 0 | 60 0 | 4068 |
| | | | SLAB ON | | | | | | | | | | | | | | | | |
| | | | WING WALL | | | | | | | | | | | | | | | | |
| 50 | 5 | H1 | SLAB | E | 20 | | | | | 2 6.000 | | | | | | | 2 6 | 2 6 | 130 |
| 4 | 4 | H2 | TOE WALL | E | 20 | | | | | 22.000 | | | | | | | 0 22 | 0 22 | 5 |
| 24 | 5 | S7 | SLAB | E | 20 | | | | | 39 6.000 | | | | | | | 39 6 | 39 6 | 989 |
| 16 | 5 | S8 | SLAB | E | 20 | | | | | 39 6.000 | | | | | | | 39 6 | 39 6 | 659 |
| 158 | 6 | S9 | SLAB | E | 20 | | | | | 8 6.000 | | | | | | | 8 6 | 8 6 | 2017 |
| 158 | 5 | S10 | SLAB | E | 20 | | | | | 8 6.000 | | | | | | | 8 6 | 8 6 | 1401 |
| 16 | 4 | V1 | TOE WALL | E | 20 | | | | | 22.000 | | | | | | | 0 22 | 0 22 | 20 |

# BILL OF REINFORCING STEEL

| NO. REQ'D. | MARK NO. SIZE | MARK NO. MARK | LOCATION | EPOXY (E) | SHAPE NO. | STIRRUP (S) | SUBSTR. (X) | VARIES (V) | NO. EACH | B FT. IN. | C FT. IN. | D FT. IN. | E FT. IN. | F FT. IN. | H FT. IN. | K FT. IN. | NOMINAL LENGTH FT. IN. | ACTUAL LENGTH FT. IN. | WEIGHT LBS. |
|---|---|---|---|---|---|---|---|---|---|---|---|---|---|---|---|---|---|---|---|
| | | | BARRIER CURB | | | | | | | | | | | | | | | | |
| 30 | 5 | K1 | BARRIER CURB | E | 19 | S | | | | 2 5.000 | 5.125 | | | | | | 2 10 | 2 9 | 86 |
| 30 | 5 | K2 | BARRIER CURB | E | 14 | S | | | | 5.125 | 11.125 | 18.000 | | | 2.000 | 17.875 | 2 10 | 2 9 | 86 |
| 8 | 5 | K3 | BARRIER CURB | E | 27 | S | | | | 18.625 | 5.125 | 12.000 | 9.125 | 12.000 | 9.875 | 6.875 | 4 9 | 4 6 | 38 |
| 22 | 5 | K4 | BARRIER CURB | E | 10 | S | | | | 12.000 | 18.625 | 6.000 | | | | | 4 7 | 4 4 | 99 |
| 2 | 5 | K5 | BARRIER CURB | E | 27 | S | | | | | 4.375 | 6.750 | 9.125 | 6.750 | 5.500 | 4.000 | 2 3 | 2 1 | 4 |
| 2 | 5 | K6 | BARRIER CURB | E | 27 | S | | | | | 4.375 | 7.875 | 9.125 | 7.875 | 6.500 | 4.500 | 2 5 | 2 3 | 5 |
| 2 | 5 | K7 | BARRIER CURB | E | 27 | S | | | | | 4.375 | 9.625 | 9.125 | 9.625 | 7.875 | 5.500 | 2 9 | 2 7 | 5 |
| 2 | 5 | K8 | BARRIER CURB | E | 27 | S | | | | | 4.375 | 11.250 | 9.125 | 11.250 | 9.250 | 6.500 | 3 0 | 2 10 | 6 |
| 24 | 5 | K9 | BARRIER CURB | E | 20 | | | | | 6 7.000 | | | | | | | 6 7 | 6 7 | 165 |
| 4 | 5 | K11 | BARRIER CURB | E | 8 | | | | | 2 2.125 | | | | | 2 2.000 | 2.375 | 4 4 | 4 4 | 18 |
| 28 | 5 | K12 | BARRIER CURB | E | 20 | | | | | 5 7.000 | | | | | | | 5 7 | 5 7 | 163 |
| 26 | 4 | K13 | BARRIER CURB | E | 20 | | | | | 5 11.000 | | | | | | | 5 11 | 5 11 | 103 |
| 42 | 5 | K14 | BARRIER CURB | E | 19 | S | | | | 3 1.000 | 5.125 | | | | | | 3 6 | 3 5 | 150 |
| 42 | 5 | K15 | BARRIER CURB | E | 14 | S | | | | 5.125 | 19.125 | 18.000 | | | 2.000 | 17.875 | 3 6 | 3 5 | 150 |
| 206 | 5 | R1 | BARRIER CURB | E | 26 | | | | | 2 6.000 | 4.250 | 2 6.125 | | | 2 6.000 | 3.000 | 5 2 | 5 2 | 1110 |
| 208 | 5 | R3 | BARRIER CURB | E | 19 | S | | | | 17.000 | 6.000 | | | | | | 0 23 | 0 22 | 398 |
| 208 | 5 | R4 | BARRIER CURB | E | 27 | S | | | | | 6.000 | 11.250 | 7.000 | 12.000 | 9.250 | 6.375 | 3 0 | 2 10 | 615 |
| 28 | 5 | R5 | BARRIER CURB | E | 20 | | | | | 35 1.000 | | | | | | | 35 1 | 35 1 | 1025 |
| 14 | 5 | R6 | BARRIER CURB | E | 20 | | | | | 35 10.000 | | | | | | | 35 10 | 35 10 | 523 |
| 2 | 5 | R7 | BARRIER CURB | E | 20 | | | | | 5 0.000 | | | | | | | 5 0 | 5 0 | 10 |
| | | | SLIP FORM | | | | | | | | | | | | | | | | |
| | | | OPTION | | | | | | | | | | | | | | | | |
| 16 | 5 | C1 | SLIP FORM | E | 20 | | | | | 10 0.000 | | | | | | | 10 0 | 10 0 | 167 |
| 4 | 5 | C2 | SLIP FORM | E | 20 | | | | | 6 3.000 | | | | | | | 6 3 | 6 3 | 26 |
| | | | TOTALS | | | | | | | | | | | | | | | | |
| | 4 | | | E | | | | | | | | | | | | | | | 128 |
| | 5 | | | E | | | | | | | | | | | | | | | 25193 |
| | 6 | | | E | | | | | | | | | | | | | | | 21291 |
| | | | TOTAL | | | | | | | | | | | | | | | | 0 |
| | | | TOTAL | E | | | | | | | | | | | | | | | 46612 |
| | | | Slab on | | | | | | | | | | | | | | | | |
| | | | Girder | | | | | | | | | | | | | | | | |
| | 4 | | | E | | | | | | | | | | | | | | | 25 |
| | 5 | | | E | | | | | | | | | | | | | | | 20344 |
| | 6 | | | E | | | | | | | | | | | | | | | 21291 |
| | | | TOTAL | | | | | | | | | | | | | | | | 41660 |
| | | | Safety | | | | | | | | | | | | | | | | |
| | | | Barrier | | | | | | | | | | | | | | | | |
| | | | Curb | | | | | | | | | | | | | | | | |
| | 4 | | | E | | | | | | | | | | | | | | | 103 |
| | 5 | | | E | | | | | | | | | | | | | | | 4656 |
| | | | TOTAL | | | | | | | | | | | | | | | | 4759 |
| | | | Slip Form | | | | | | | | | | | | | | | | |
| | | | Option | | | | | | | | | | | | | | | | |
| | 5 | | | E | | | | | | | | | | | | | | | 193 |
| | | | TOTAL | | | | | | | | | | | | | | | | 193 |

TWO ADDITIONAL #4-K13, #5-S5 & #6-S2 ARE INCLUDED IN THE BAR BILL FOR TESTING.

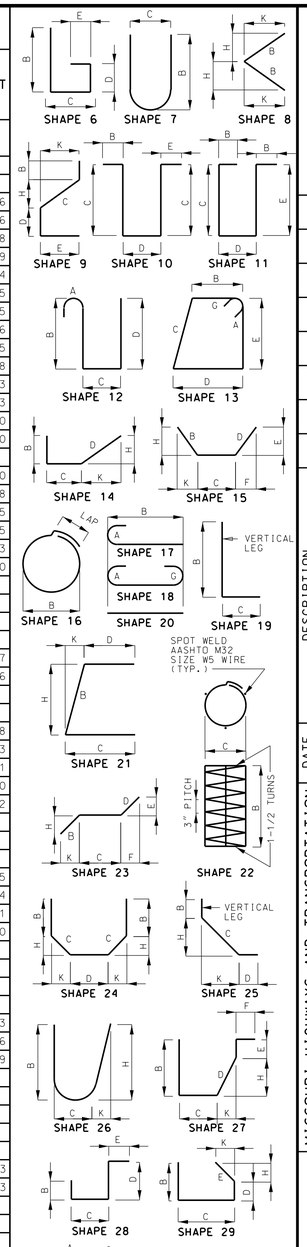


BENDING DIAGRAMS

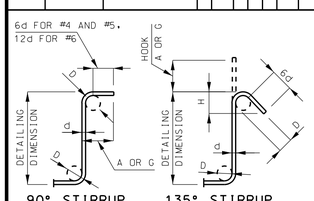


| STIRRUP HOOK DIMENSIONS | | | | |
|---|---|---|---|---|
| GRADES 40 - 50 - 60 KSI | | | | |
| BAR SIZE | D (IN.) | 90° HOOK | 135° HOOK | |
| | | HOOK A OR G | HOOK A OR G | APPROX. H |
| #4 | 2" | 4 1/2" | 4 1/2" | 3" |
| #5 | 2 1/2" | 6" | 5 1/2" | 3 3/4" |
| #6 | 4 1/2" | 12" | 8" | 4 1/2" |

NOTE: UNLESS OTHERWISE NOTED DIAMETER "D" IS THE SAME FOR ALL BENDS AND HOOKS ON A BAR.

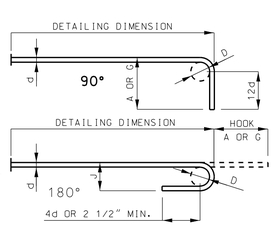


| END HOOK DIMENSIONS | | | | |
|---|---|---|---|---|
| BAR SIZE | D (IN.) | ALL GRADES | | |
| | | 180° HOOKS | | 90° HOOKS |
| | | A OR G | J | A OR G |
| #3 | 2 1/4" | 5" | 3" | 6" |
| #4 | 3" | 6" | 4" | 8" |
| #5 | 3 3/4" | 7" | 5" | 10" |
| #6 | 4 1/2" | 8" | 6" | 12" |
| #7 | 5 1/4" | 10" | 7" | 14" |
| #8 | 6" | 11" | 8" | 16" |
| #9 | 9 1/2" | 15" | 11 3/4" | 19" |
| #10 | 10 3/4" | 17" | 13 1/4" | 22" |
| #11 | 12" | 19" | 14 3/4" | 2'-0" |
| #14 | 18 1/4" | 2'-3" | 21 3/4" | 2'-7" |

**NOTE:**
ALL STANDARD HOOKS AND BENDS OTHER THAN 180 DEGREE ARE TO BE BENT WITH SAME PROCEDURE AS FOR 90 DEGREE STANDARD HOOKS.
HOOKS AND BENDS SHALL BE IN ACCORDANCE WITH THE PROCEDURES AS SHOWN ON THIS SHEET.
E = EPOXY COATED REINFORCEMENT.
S = STIRRUP.
X = BAR IS INCLUDED IN SUBSTRUCTURE QUANTITIES.
V = BAR DIMENSIONS VARY IN EQUAL INCREMENTS BETWEEN DIMENSIONS SHOWN ON THIS LINE AND THE FOLLOWING LINE.
NO. EA. = NUMBER OF BARS OF EACH LENGTH.
NOMINAL LENGTHS ARE BASED ON OUT TO OUT DIMENSIONS SHOWN IN BENDING DIAGRAMS AND ARE LISTED FOR FABRICATORS USE. (NEAREST INCH)
ACTUAL LENGTHS ARE MEASURED ALONG CENTERLINE BAR TO THE NEAREST INCH.
PAYWEIGHTS ARE BASED ON ACTUAL LENGTHS.
FOUR ANGLE OR CHANNEL SPACERS ARE REQUIRED FOR EACH COLUMN SPIRAL. SPACERS ARE TO BE PLACED ON INSIDE OF SPIRALS. LENGTH AND WEIGHT OF COLUMN SPIRALS DO NOT INCLUDE SPLICES OR SPACERS.
REINFORCING STEEL (GRADE 60) FY = 60,000 PSI.

"THIS MEDIA SHOULD NOT BE CONSIDERED A CERTIFIED DOCUMENT."

| | |
|---|---|
| DATE PREPARED | 1/17/2013 |
| ROUTE | I-35 |
| STATE | MO |
| DISTRICT | BR |
| SHEET NO. | 18 |
| COUNTY | JACKSON |
| JOB NO. | J4I2371 |
| CONTRACT ID. | |
| PROJECT NO. | |
| BRIDGE NO. | L07816 |

DESCRIPTION

DATE

MISSOURI HIGHWAYS AND TRANSPORTATION COMMISSION
105 WEST CAPITOL
JEFFERSON CITY, MO 65102
1-888-ASK-MODOT (1-888-275-6636)

IF A SEAL IS PRESENT ON THIS SHEET IT HAS BEEN ELECTRONICALLY SEALED AND DATED.

Detailed Nov. 2012
Checked Nov. 2012

Note: This drawing is not to scale. Follow dimensions.

# MISSOURI HIGHWAYS AND TRANSPORTATION COMMISSION

## U.I.P & REDECK EXISTING (63') SIMPLE COMPOSITE WIDE FLANGE BEAM SPAN

SEC/SUR 32 TWP 50N RGE 33W

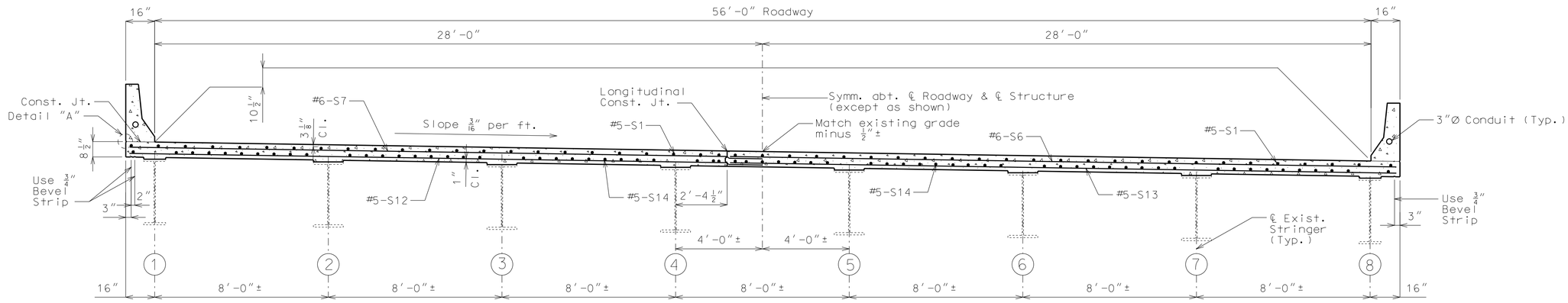


TYPICAL SECTION THRU SLAB

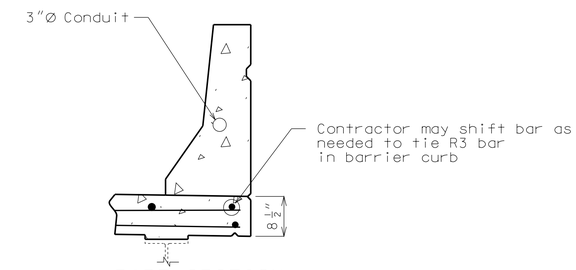


PART SECTION
THRU EDGE OF SLAB

## General Notes:

**Design Specifications:**

2002 - AASHTO 17th Edition
Load Factor Design
Seismic Performance Category A

**Design Loading:**

HS20 Modified (New Construction)
35#/sq. ft. Future Wearing Surface
Earth - 120#/cu. ft., Equivalent Fluid Pressure 45#/cu. ft.
Fatigue Stress - Case I

**Design Unit Stresses:**

| | |
|---|---|
| Class B-1 Concrete (Safety Barrier Curb) | f'c = 4,000 psi |
| Class B-2 Concrete (Superstructure, except Safety Barrier Curb) | f'c = 4,000 psi |
| Reinforcing Steel (Grade 60) | fy = 60,000 psi |

**Joint Filler:**

All joint filler shall be in accordance with Sec 1057 for preformed sponge rubber expansion and partition joint filler, except as noted.

**Reinforcing Steel:**

Minimum clearance to reinforcing steel shall be 1-1/2", unless otherwise shown.

**Miscellaneous:**

Bars bonded in old concrete not removed shall be cleanly stripped and embedded into new concrete where possible. If length is available, old bars shall extend into new concrete at least 40 diameters for smooth bars and 30 diameters for deformed bars, unless otherwise noted.

Roadway surfacing adjacent to bridge ends shall match new bridge approach slab surface (Roadway Item).

Outline of old work is indicated by light dashed lines. Heavy lines indicate new work.

Contractor shall verify all dimensions in field before ordering new material.

The area exposed by the removal of concrete and not covered with new concrete shall be coated with an approved qualified special mortar in accordance with Sec 704.

Protective coating for concrete bents and piers (Epoxy) shall be applied as shown on the bridge plans and in accordance with Sec 711.

High strength bolts, nuts and washers will be sampled for quality assurance as specified in Sec 106.

**Traffic Handling:**

Maintain traffic on structure during construction.
See Sheet No. 2 for Details of Stage Construction and Roadway Plans for traffic control.

### Estimated Quantities

| | Item | | Total |
|---|---|---|---|
| | Removal of Existing Bridge Decks | sq. foot | 4033 |
| | Partial Removal of Substructure Concrete | lump sum | 1 |
| | Bridge Approach Slab (Bridge) | sq. yard | 316 |
| | Slab on Steel | sq. yard | 441 |
| * | Safety Barrier Curb | linear foot | 223 |
| | Substructure Repair (Formed) | sq. foot | 5 |
| | Conduit System on Structure | lump sum | 1 |
| | Protective Coating - Concrete Bents and Piers (Epoxy) | lump sum | 1 |
| | Silicone Expansion Joint Sealant | linear foot | 56 |

* Safety barrier curb shall be cast-in-place option or slip-form option.

Cost of any required excavation for bridge will be considered completely covered by the contract unit price for other items.

All concrete and reinforcement in the end bents above the top of existing beam is included in the Estimated Quantities for Slab on Steel.

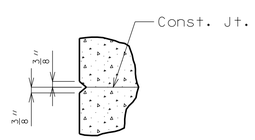


DETAIL "A"

### Estimated Quantities for Slab on Steel

| Item | | Total |
|---|---|---|
| Class B-2 Concrete | cu. yard | 186.1 |
| Reinforcing Steel (Epoxy Coated) | pound | 35,230 |

The table of Estimated Quantities for Slab on Steel represents the quantities used by the State in preparing the cost estimate for concrete slabs. The area of the concrete slab will be measured to the nearest square yard from end of slab to end of slab and the overall width shown in the Typical Section Thru Slab. Payment for conventional forms or optional stay-in-place forms, all concrete and coated reinforcing steel will be considered completely covered by the contract unit price for the slab.

Method of forming the slab shall be in accordance with Sec 703. All hardware for forming the slab to be left in place as a permanent part of the structure shall be coated in accordance with ASTM A123 or ASTM B633 with a thickness class SC 4 and a finish type I, II or III.

Slab shall be cast-in-place with conventional forming or stay-in-place corrugated steel forms. Precast prestressed panels will not be permitted.

For optional stay-in-place form details, see Sheet No. 3.

REPAIRS TO BRIDGE: RTE. I-35 NB
& RTE. I-70 EB OVER CHARLOTTE STREET

STATE ROAD: MIDTOWN FREEWAY
IN KANSAS CITY
STA. 14+34.16± (MATCH EXIST.)

| |
|---|
| STD. 609.00 |
| STD. 617.10 |
| STD. 706.35 |

Designed July 2012
Detailed Dec. 2012
Checked Dec. 2012

Note: This drawing is not to scale. Follow dimensions.



"THIS MEDIA SHOULD NOT BE CONSIDERED A CERTIFIED DOCUMENT."

| | |
|---|---|
| DATE PREPARED | 1/17/2013 |
| ROUTE | I-35 |
| STATE | MO |
| DISTRICT | BR |
| SHEET NO. | 1 |
| COUNTY | JACKSON |
| JOB NO. | J4I2371 |
| CONTRACT ID. | |
| PROJECT NO. | |
| BRIDGE NO. | L07817 |

DESCRIPTION

DATE

IF A SEAL IS PRESENT ON THIS SHEET IT HAS BEEN ELECTRONICALLY SEALED AND DATED.

MISSOURI HIGHWAYS AND TRANSPORTATION COMMISSION
105 WEST CAPITOL
JEFFERSON CITY, MO 65102
1-888-ASK-MODOT (1-888-275-6636)

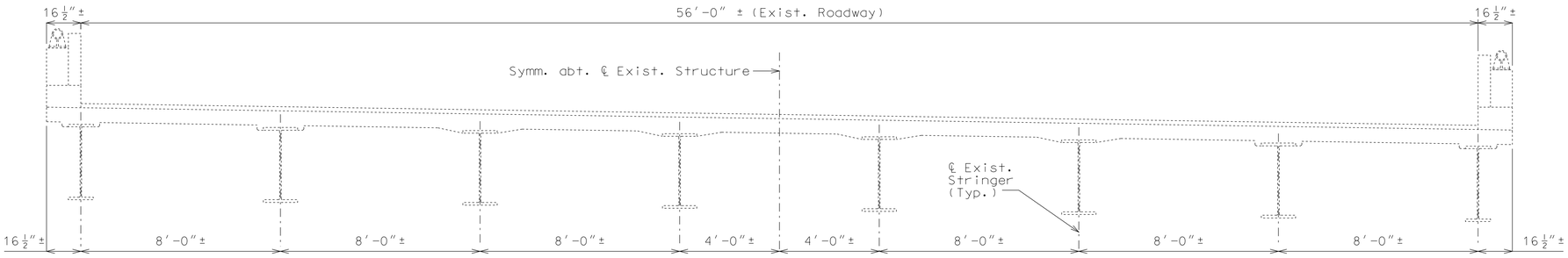


EXISTING SLAB SECTION

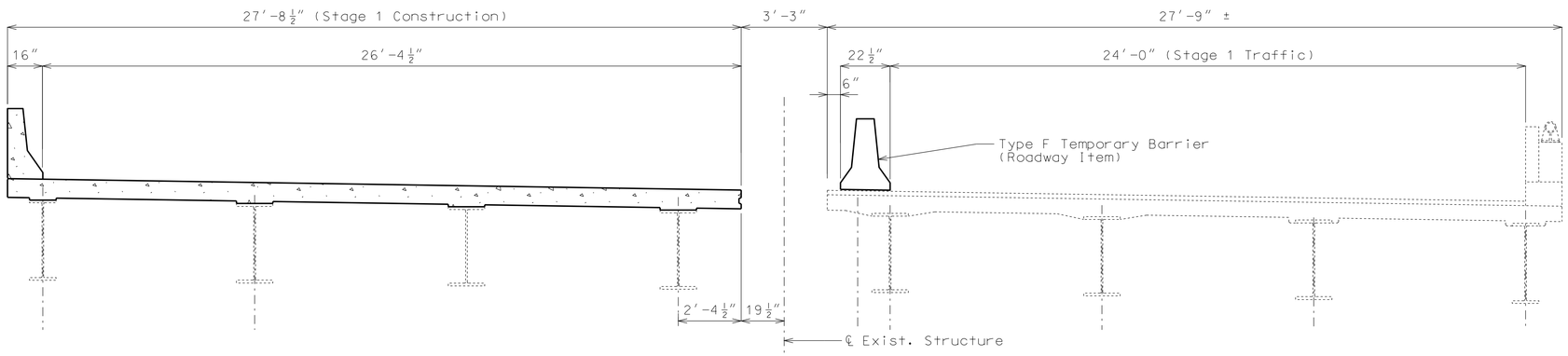


STAGE 1 CONSTRUCTION

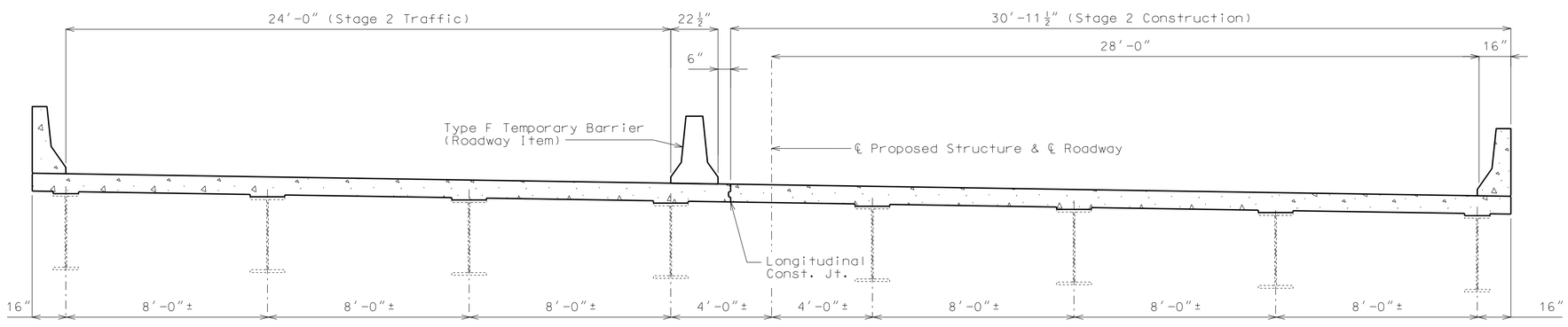


STAGE 2 CONSTRUCTION

Notes:

Rivets on existing intermediate diaphragms that connect stringers under different construction stage slab pours shall be removed, replaced with new ¾" H.S. bolts and installed snug tight prior to removal of existing slab, then tightened after both adjacent slab pours are completed.

Cost of removing existing rivets and furnishing and installing new ¾"Ø H.S. bolts will be considered completely covered by the contract unit price for other items.

Notes:

Method of attachment for the Type F Temporary Barrier shall be the Tie-Down Strap.

The contractor may use the bolt though the deck method of attaching the Type F Temporary Barrier for Stage 1 only.

# DETAILS OF STAGE CONSTRUCTION

Detailed Oct. 2012
Checked Dec. 2012

Note: This drawing is not to scale. Follow dimensions.



"THIS MEDIA SHOULD NOT BE CONSIDERED A CERTIFIED DOCUMENT."

| | |
|---|---|
| DATE PREPARED | 1/17/2013 |
| ROUTE | I-35 |
| STATE | MO |
| DISTRICT | BR |
| SHEET NO. | 2 |
| COUNTY | JACKSON |
| JOB NO. | J4I2371 |
| CONTRACT ID. | |
| PROJECT NO. | |
| BRIDGE NO. | L07817 |

| DESCRIPTION | DATE |
|---|---|
| | |

MISSOURI HIGHWAYS AND TRANSPORTATION COMMISSION

105 WEST CAPITOL
JEFFERSON CITY, MO 65102
1-888-ASK-MODOT (1-888-275-6636)

IF A SEAL IS PRESENT ON THIS SHEET IT HAS BEEN ELECTRONICALLY SEALED AND DATED.

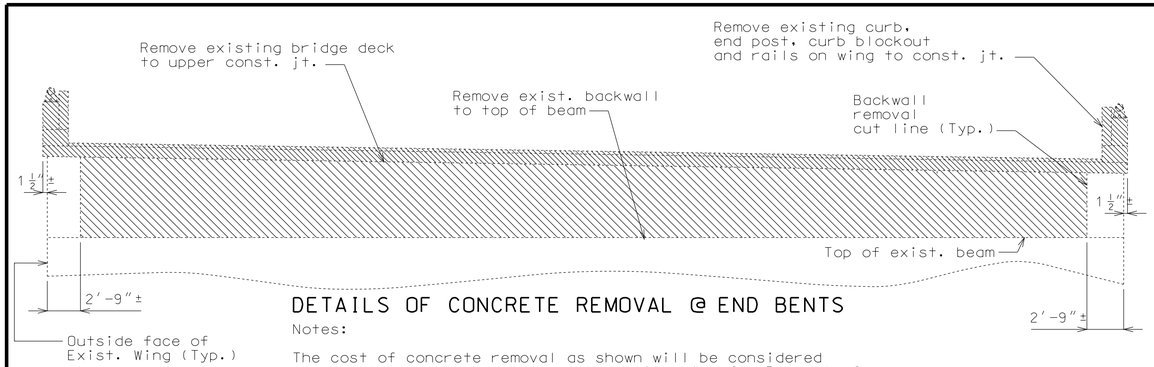


## DETAILS OF CONCRETE REMOVAL @ END BENTS

Notes:

The cost of concrete removal as shown will be considered completely covered by the contract unit price for Removal of Existing Bridge Decks, except the cost of backwall removal will be considered completely covered by Partial Removal of Substructure Concrete.

All exposed backwall reinforcement at End Bent No. 2 only shall be cut off one inch below concrete removal surface, and the resulting holes shall be filled with a qualified special mortar.

A smooth, level surface shall be provided at End Bent No. 2 removal lines.

Notes:

Existing vertical clearance sign and attachment brackets shall be removed and welds ground flush with stringer webs. Payment will be considered completely covered by the contract unit price for Removal of Existing Bridge Decks.

Surfaces of existing structural steel exposed from vertical clearance sign removal shall be recoated with one 6-mil thickness of gray epoxy-mastic primer applied over an SSPC-SP3 surface preparation in accordance with Sec 1081. The cost of surface preparation and gray epoxy-mastic primer will be considered completely covered by the contract unit price for Removal of Existing Bridge Decks.

The new vertical clearance sign is a Roadway Item and shall be attached to the Safety Barrier Curb.

The location and attachment details of the new vertical clearance sign shall be determined by the engineer.

Cost of furnishing and installing cone expansion anchors will be considered completely covered by the contract unit price for Safety Barrier Curb.

The $\frac{3}{4}$"Ø diameter cone expansion anchors shall have a minimum ultimate pullout strength of 12,000 lbs. in concrete with f'c = 4,000 psi.

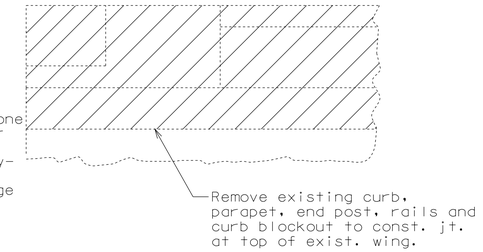


## ELEVATION OF END POST SHOWING CONCRETE REMOVAL LIMITS

Note:

Cost of removing curb, parapet, end post, rails and curb blockout concrete at end bents, as shown, will be considered completely covered by the contract unit price for Removal of Existing Bridge Decks.

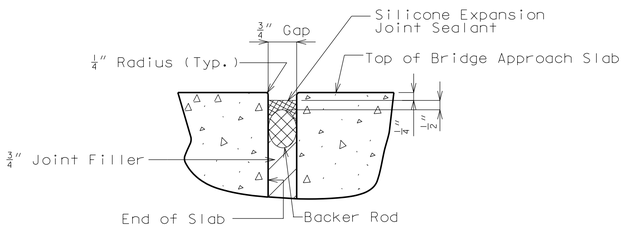


## DETAIL OF SILICONE EXPANSION JOINT SEALANT AT END BENT NO. 2

Note:

Silicone Expansion Joint Sealant shall be in accordance with Sec 717.

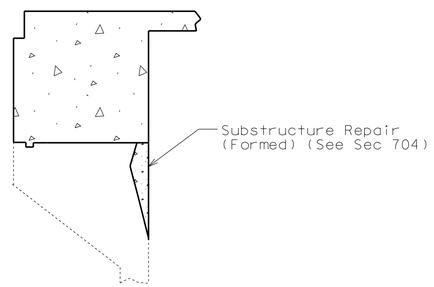


## PART ELEVATION OF END BENT NO. 2 SHOWING SUBSTRUCTURE REPAIR

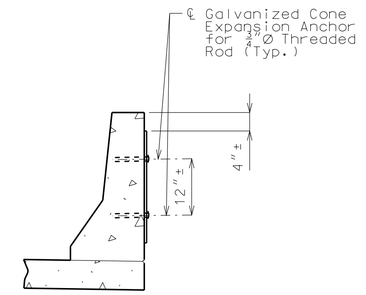


## PART SECTION THRU BARRIER CURB SHOWING SIGN ATTACHMENT

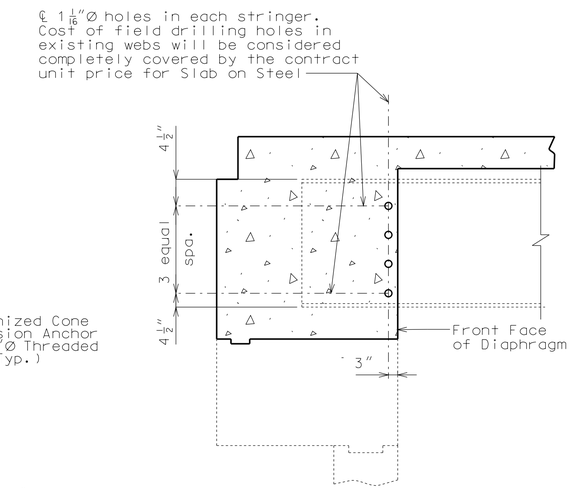


## DETAIL OF WEB HOLES AT END BENT

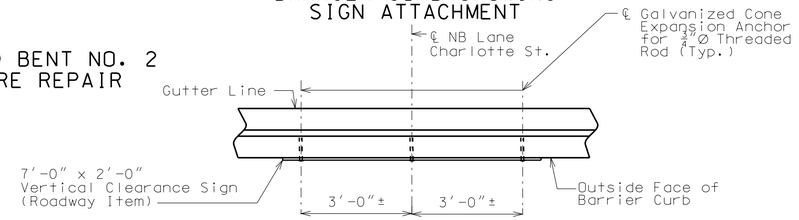


## PART PLAN SHOWING SIGN LOCATION

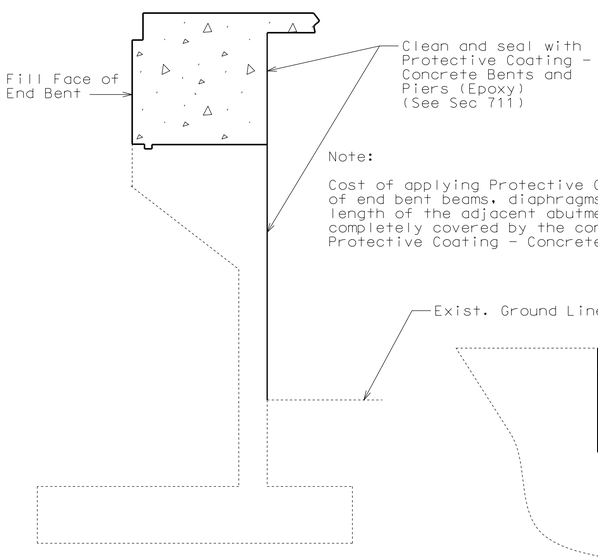


Note:

Cost of applying Protective Coating to front face of end bent beams, diaphragms and approximately one half the length of the adjacent abutment wall will be considered completely covered by the contract lump sum price for Protective Coating - Concrete Bents and Piers (Epoxy).

## TYPICAL SECTION THRU END BENTS NO. 1 & 2 SHOWING PROTECTIVE COATING

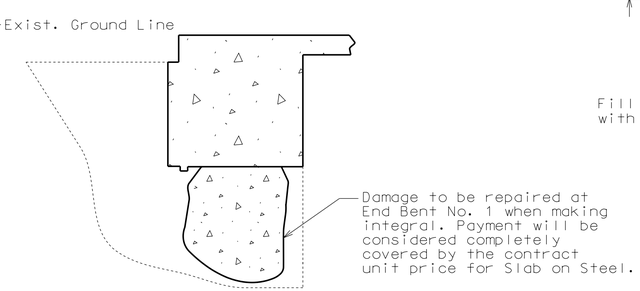


## PART ELEVATION OF END BENT NO. 1 SHOWING REPAIR TO SOUTHWEST CORNER

Note: This drawing is not to scale. Follow dimensions.

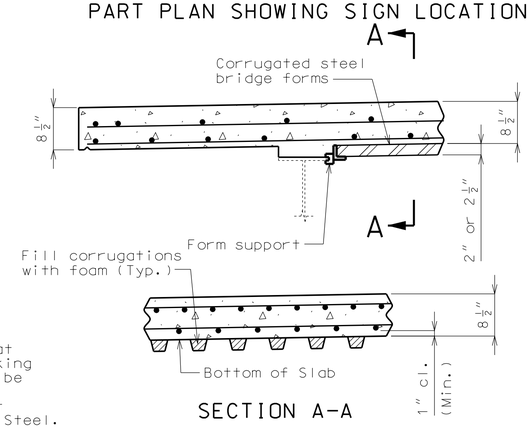


## SECTION A-A

## OPTIONAL STAY-IN-PLACE FORM DETAILS

Notes:

Corrugated steel forms, supports, closure elements and accessories shall be in accordance with grade requirement and coating designation G165 of ASTM A653. Complete shop drawings of the permanent steel deck forms shall be required in accordance with Sec 1080.

Corrugations of stay-in-place forms shall be filled with an expanded polystyrene material. The polystyrene material shall be placed in the forms with an adhesive in accordance with the manufacturer's recommendations.

Form sheets shall not rest directly on the top of girders, stringers or floorbeams flanges. Sheets shall be securely fastened to form supports with a minimum bearing length of one inch on each end. Form supports shall be placed in direct contact with the flange. Welding on or drilling holes in the flanges of the girders, stringers or floorbeams will not be permitted. All steel fabrication and construction shall be in accordance with Sec's 1080 and 712. MoDOT certified field welders will not be required for welding of the form supports.

The contractor shall provide temporary bracing as necessary to prevent stringers from rotating during slab pour. The cost for temporary bracing will be considered completely covered by the contract unit price for Slab on Steel.

Detailed Oct. 2012
Checked Dec. 2012



"THIS MEDIA SHOULD NOT BE CONSIDERED A CERTIFIED DOCUMENT."

| DATE PREPARED | |
|---|---|
| 1/17/2013 | |
| ROUTE | STATE |
| I-35 | MO |
| DISTRICT | SHEET NO. |
| BR | 3 |
| COUNTY | |
| JACKSON | |
| JOB NO. | |
| J4I2371 | |
| CONTRACT ID. | |
| PROJECT NO. | |
| BRIDGE NO. | |
| L07817 | |

| DATE | DESCRIPTION |
|---|---|
| | |

MISSOURI HIGHWAYS AND TRANSPORTATION COMMISSION
105 WEST CAPITOL
JEFFERSON CITY, MO 65102
1-888-ASK-MODOT (1-888-275-6636)

IF A SEAL IS PRESENT ON THIS SHEET IT HAS BEEN ELECTRONICALLY SEALED AND DATED.

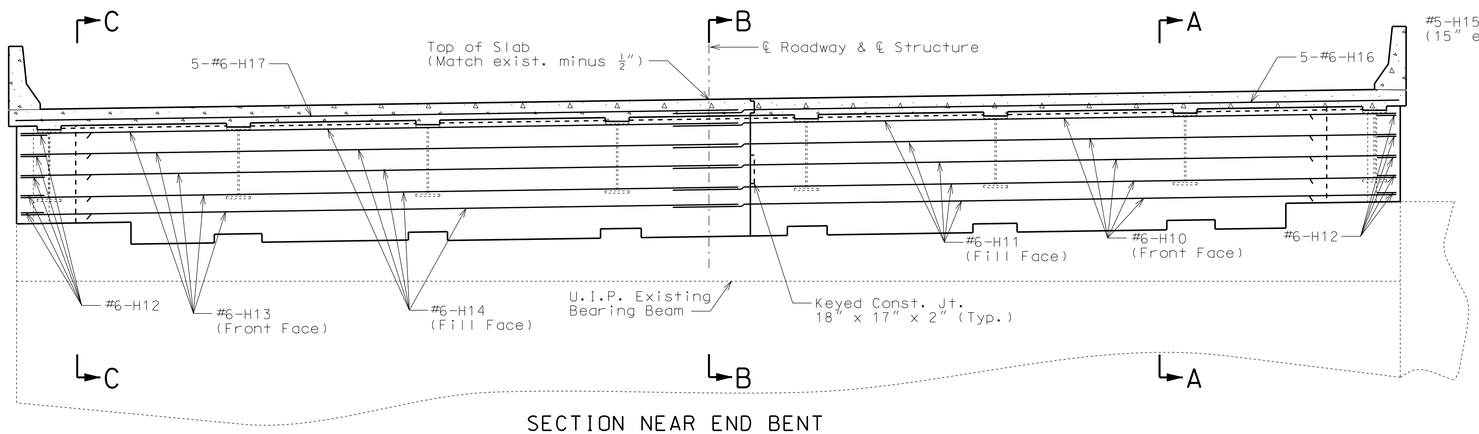


SECTION NEAR END BENT

Note: Existing steel end diaphragms not shown for clarity (leave in place).
Resin anchors not shown for clarity.

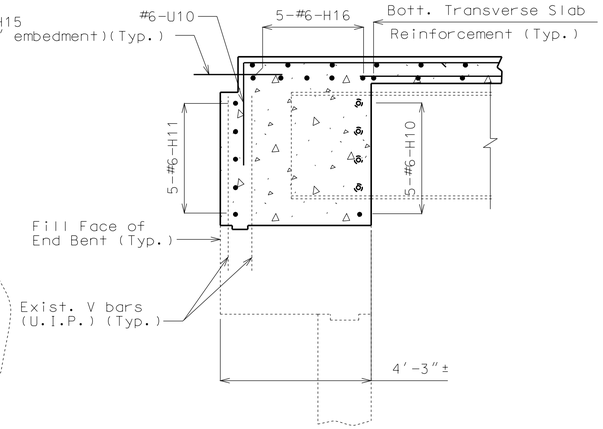


SECTION A-A

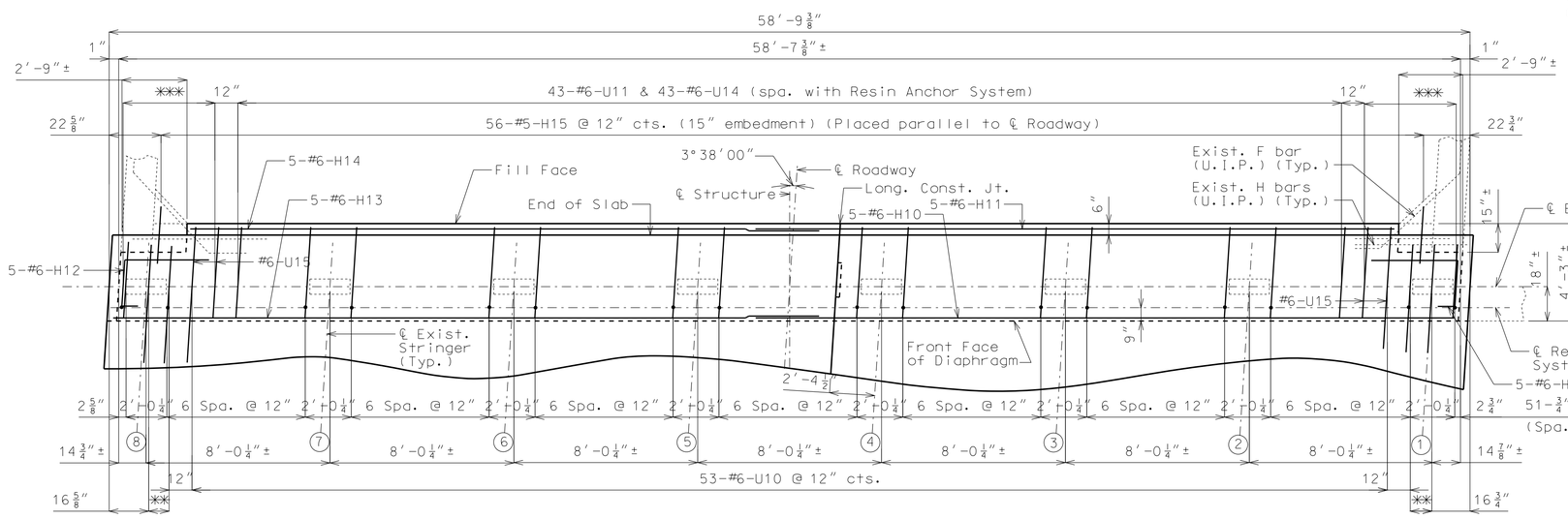


PART PLAN

Note: Slab reinforcement not shown for clarity.

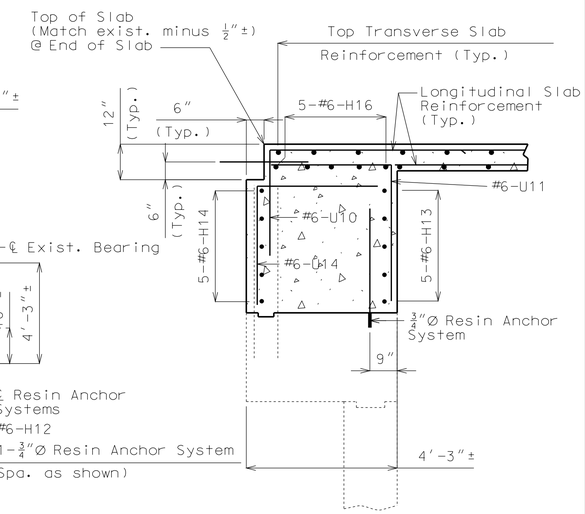


SECTION B-B

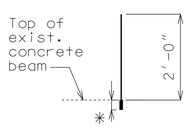


(51 req'd.)

✱ Manufacturer's recommended embedment length (5" min.)

DETAILS OF RESIN ANCHOR SYSTEM

Note:

The H10 & H13 bars are segmented bars for ease of placement of bars through stringer web holes between stringers. The total bar lengths for the H10 & H13 bars shown in Bill of Reinforcing Steel allow for one splice with a lap splice length of 3'-6". Actual bar segment lengths to be determined by contractor for ease of installing bars. The contractor may use a mechanical bar splice in lieu of a lap splice. When a mechanical bar splice is used, the actual bar segment lengths will be determined by the contractor to accommodate manufacturer's recommendations for installation and ease of construction. The cost of furnishing and installing the bar splices will be considered completely covered by the contract unit price for Slab on Steel. No adjustment of the quantity of reinforcing steel will be allowed for the use of mechanical bar splices.

Notes:

All U-Bars in End Bent shall be placed parallel to ℄ Roadway.

For reinforcement in safety barrier curb, see Sheets No. 9 thru 14.

The exposed and accessible surfaces of the existing structural steel and bearings that will be encased in concrete shall be cleaned with a minimum of SSPC-SP-2 surface preparation before concrete is poured. Payment for cleaning steel to be encased in concrete will be considered completely covered by the contract unit price for Slab on Steel.

The contractor shall use one of the qualified resin anchor systems in accordance with Sec 1039.

Cost of furnishing and installing the resin anchor system, complete in place, will be considered completely covered by the contract unit price for Slab on Steel.

The minimum embedment depth in concrete with f'c = 4,000 psi for the resin anchor system shall be that required to meet the minimum ultimate pullout strength in accordance with Sec 1039 but shall not be less than 5".

An epoxy coated #6 Grade 60 reinforcing bar shall be substituted for the ¾"Ø threaded rod.

For Detail of Web Holes at End Bent, see Sheet No. 3.

For Details of Stage Construction, see Sheet No. 2.

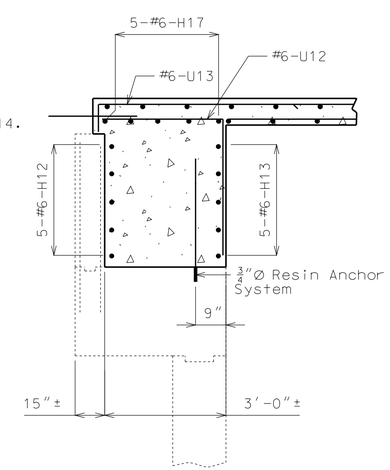


SECTION C-C

# DETAILS OF END BENT NO. 1

Detailed Dec. 2012
Checked Dec. 2012

Note: This drawing is not to scale. Follow dimensions.



"THIS MEDIA SHOULD NOT BE CONSIDERED A CERTIFIED DOCUMENT."

| DATE PREPARED | |
|---|---|
| 1/17/2013 | |
| ROUTE | STATE |
| I-35 | MO |
| DISTRICT | SHEET NO. |
| BR | 4 |
| COUNTY | |
| JACKSON | |
| JOB NO. | |
| J4I2371 | |
| CONTRACT ID. | |
| PROJECT NO. | |
| BRIDGE NO. | |
| L07817 | |

| DATE | DESCRIPTION |
|---|---|
| | |

MISSOURI HIGHWAYS AND TRANSPORTATION COMMISSION
105 WEST CAPITOL
JEFFERSON CITY, MO 65102
1-888-ASK-MODOT (1-888-275-6636)

IF A SEAL IS PRESENT ON THIS SHEET IT HAS BEEN ELECTRONICALLY SEALED AND DATED.

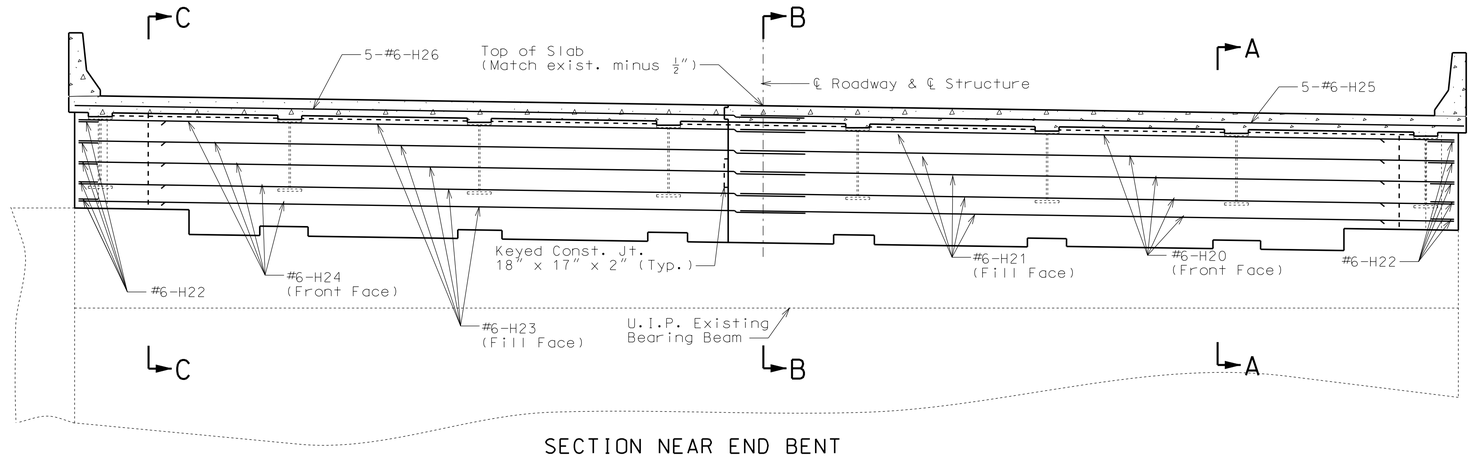


## SECTION NEAR END BENT

Note: Existing steel end diaphragms not shown for clarity (leave in place).

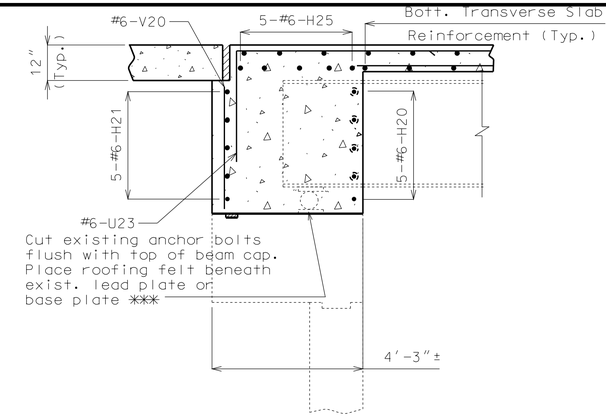


## SECTION A-A

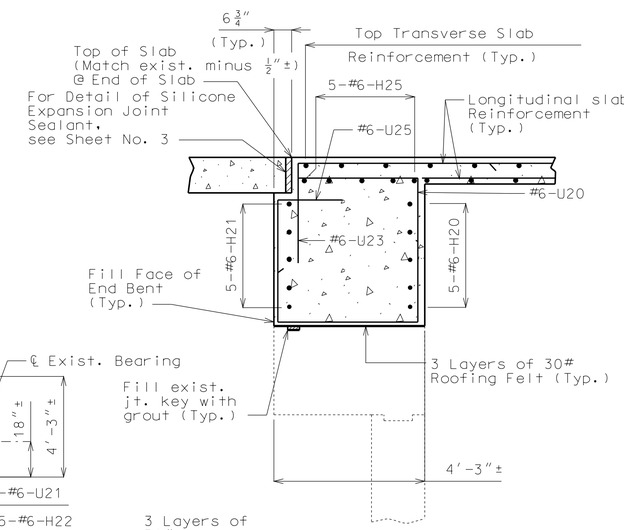


## SECTION B-B

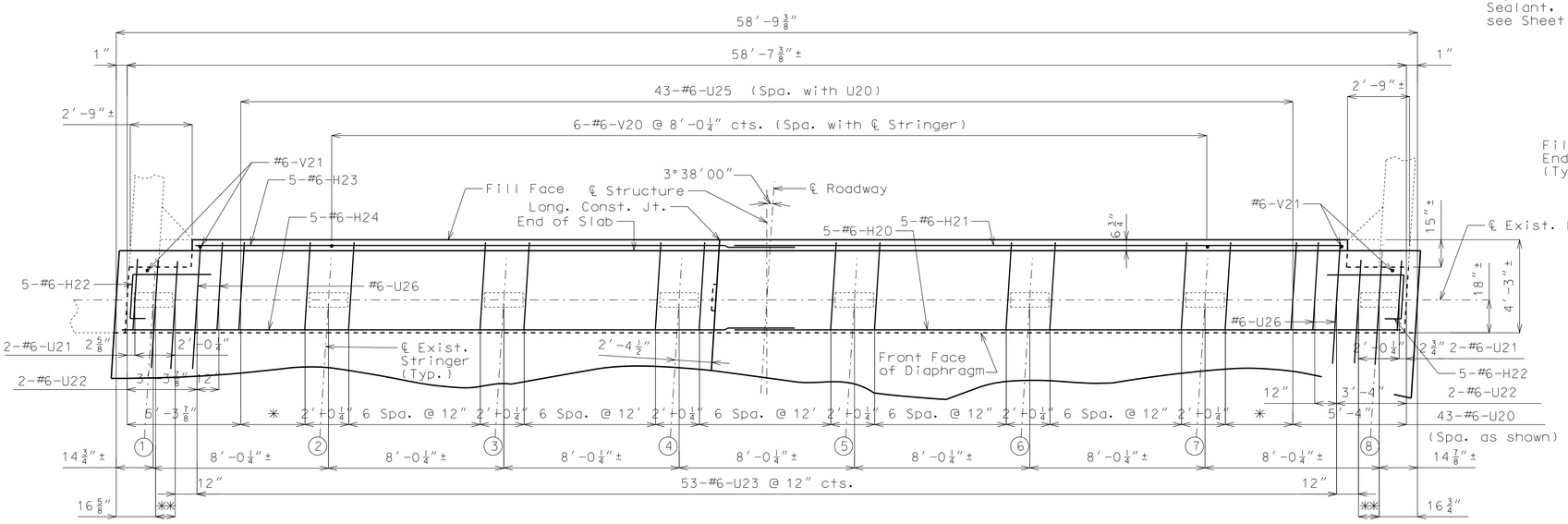


## PART PLAN

Note: Slab reinforcement not shown for clarity.

Note:

* 3 spaces @ 12"

** 2-#6-U24 @ 12" cts.

The H20 & H24 bars are segmented bars for ease of placement of bars through stringer web holes between stringers. The total bar lengths for H20 & H24 bars shown in Bill of Reinforcing Steel allow for one splice with a lap splice length of 3'-6". Actual bar segment lengths to be determined by contractor for ease of installing bars. The contractor may use a mechanical bar splice in lieu of a lap splice. When a mechanical bar splice is used, the actual bar segment lengths will be determined by the contractor to accommodate manufacturer's recommendations for installation and ease of construction. The cost of furnishing and installing the bar splices will be considered completely covered by the contract unit price for Slab on Steel. No adjustment of the quantity of reinforcing steel will be allowed for the use of mechanical bar splices.

*** These tasks and the temporary support of the girder ends while completing these tasks will be considered completely covered by the contract unit price for Slab on Steel.

Notes:

All U-Bars in End Bent shall be placed parallel to ℄ Roadway.

For reinforcement in safety barrier curb, see Sheets No. 9 thru 14.

The exposed and accessible surfaces of the existing structural steel and bearings that will be encased in concrete shall be cleaned with a minimum of SSPC-SP-2 surface preparation before concrete is poured. Payment for cleaning steel to be encased in concrete will be considered completely covered by the contract unit price for Slab on Steel.

For Details of Stage Construction, see Sheet No. 2.

For Detail of Web Holes at End Bent, see Sheet No. 3.

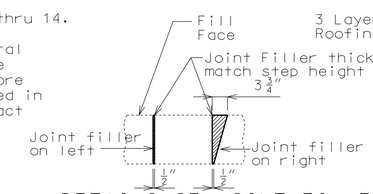


## DETAILS OF JOINT FILLER AT BEAM STEPS

(Typical at all beam steps)

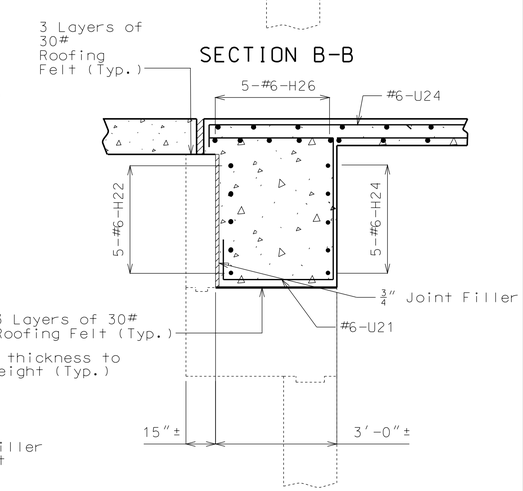


## SECTION C-C

# DETAILS OF END BENT NO. 2

Detailed Oct. 2012
Checked Dec. 2012

Note: This drawing is not to scale. Follow dimensions.



"THIS MEDIA SHOULD NOT BE CONSIDERED A CERTIFIED DOCUMENT."

| DATE PREPARED | |
|---|---|
| 1/17/2013 | |
| ROUTE | STATE |
| I-35 | MO |
| DISTRICT | SHEET NO. |
| BR | 5 |
| COUNTY | |
| JACKSON | |
| JOB NO. | |
| J4I2371 | |
| CONTRACT ID. | |
| PROJECT NO. | |
| BRIDGE NO. | |
| L07817 | |

| DATE | DESCRIPTION |
|---|---|

IF A SEAL IS PRESENT ON THIS SHEET IT HAS BEEN ELECTRONICALLY SEALED AND DATED.

MISSOURI HIGHWAYS AND TRANSPORTATION COMMISSION
105 WEST CAPITOL
JEFFERSON CITY, MO 65102
1-888-ASK-MODOT (1-888-275-6636)

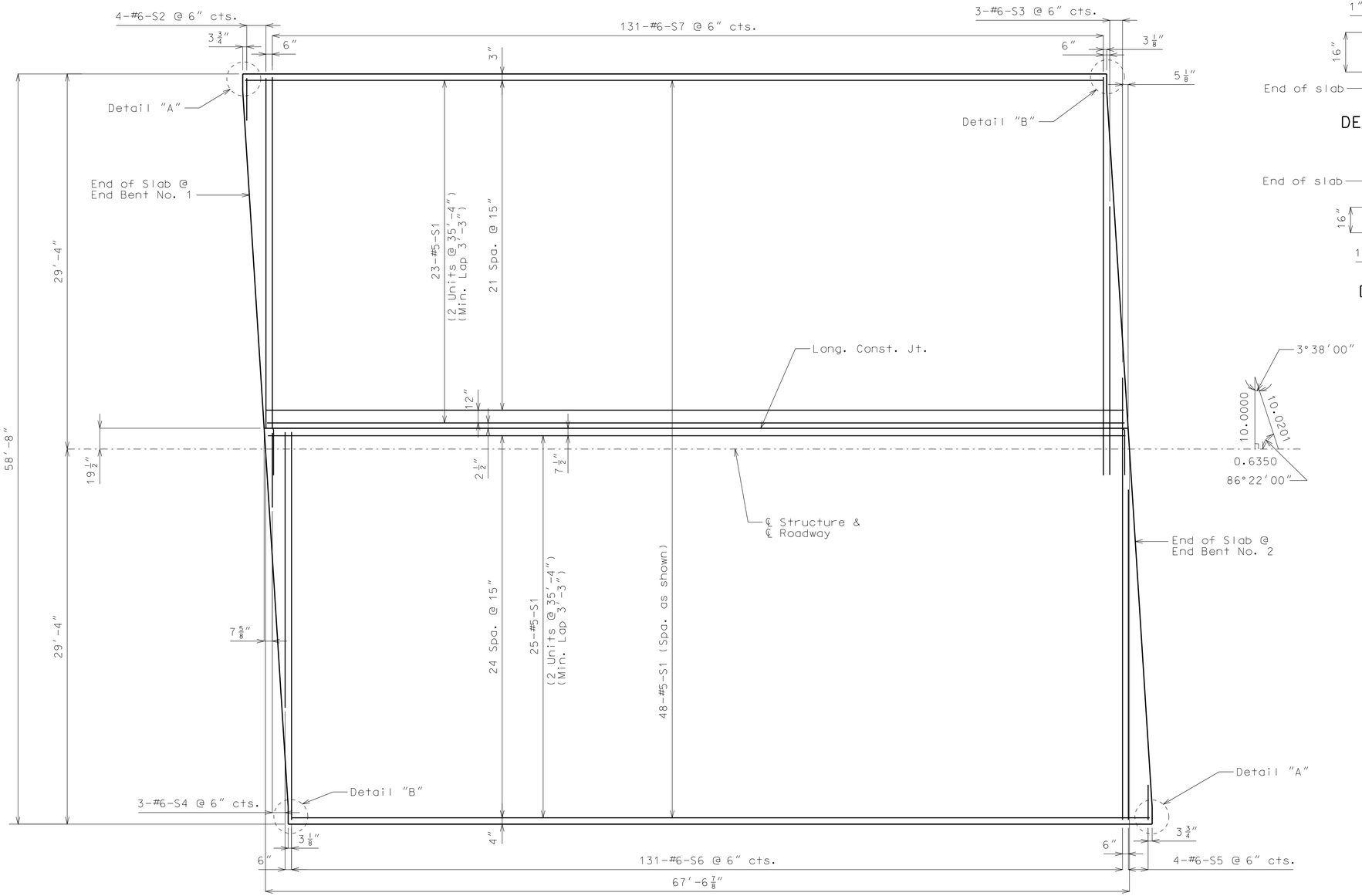


SPAN (1-2)

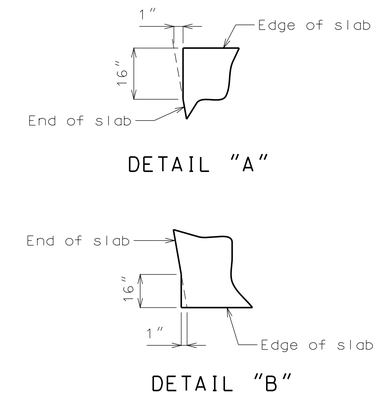


## PLAN OF SLAB SHOWING TOP REINFORCEMENT

Notes:

Longitudinal slab dimensions are measured horizontally.

For Typical Section Thru Slab, see Sheet No. 1.

For Details and Reinforcement of Safety Barrier Curbs, see Sheets No. 9 thru 14.

For Plan of Slab Showing Bottom Reinforcement, see Sheet No. 7.

For Optional Stay-in-Place Form Details, see Sheet No. 3.

Slab shall be poured from end to end at a minimum rate of 25 cu. yd./hr.

Alternate pour sequences may be submitted to the engineer for approval. Keyed construction joints shall be provided between pours.

Slab is to be considered at a uniform depth as shown on the plans. Haunching will vary.

Deflection Note:

The contractor shall determine dead load deflections and haunching based on field measurements and/or existing bridge plans and may be adjusted based on the difference between the new and existing dead load weights.

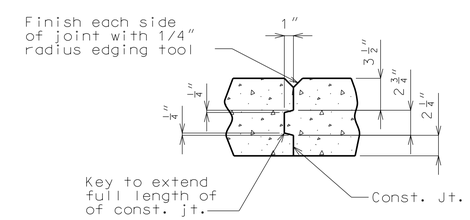


## SLAB CONSTRUCTION JOINT DETAIL

Detailed Oct. 2012
Checked Dec. 2012

Note: This drawing is not to scale. Follow dimensions.



"THIS MEDIA SHOULD NOT BE CONSIDERED A CERTIFIED DOCUMENT."

| | |
|---|---|
| DATE PREPARED | 1/17/2013 |
| ROUTE | I-35 |
| STATE | MO |
| DISTRICT | BR |
| SHEET NO. | 6 |
| COUNTY | JACKSON |
| JOB NO. | J4I2371 |
| CONTRACT ID. | |
| PROJECT NO. | |
| BRIDGE NO. | L07817 |

DESCRIPTION

DATE

MISSOURI HIGHWAYS AND TRANSPORTATION COMMISSION

105 WEST CAPITOL
JEFFERSON CITY, MO 65102
1-888-ASK-MODOT (1-888-275-6636)

IF A SEAL IS PRESENT ON THIS SHEET IT HAS BEEN ELECTRONICALLY SEALED AND DATED.

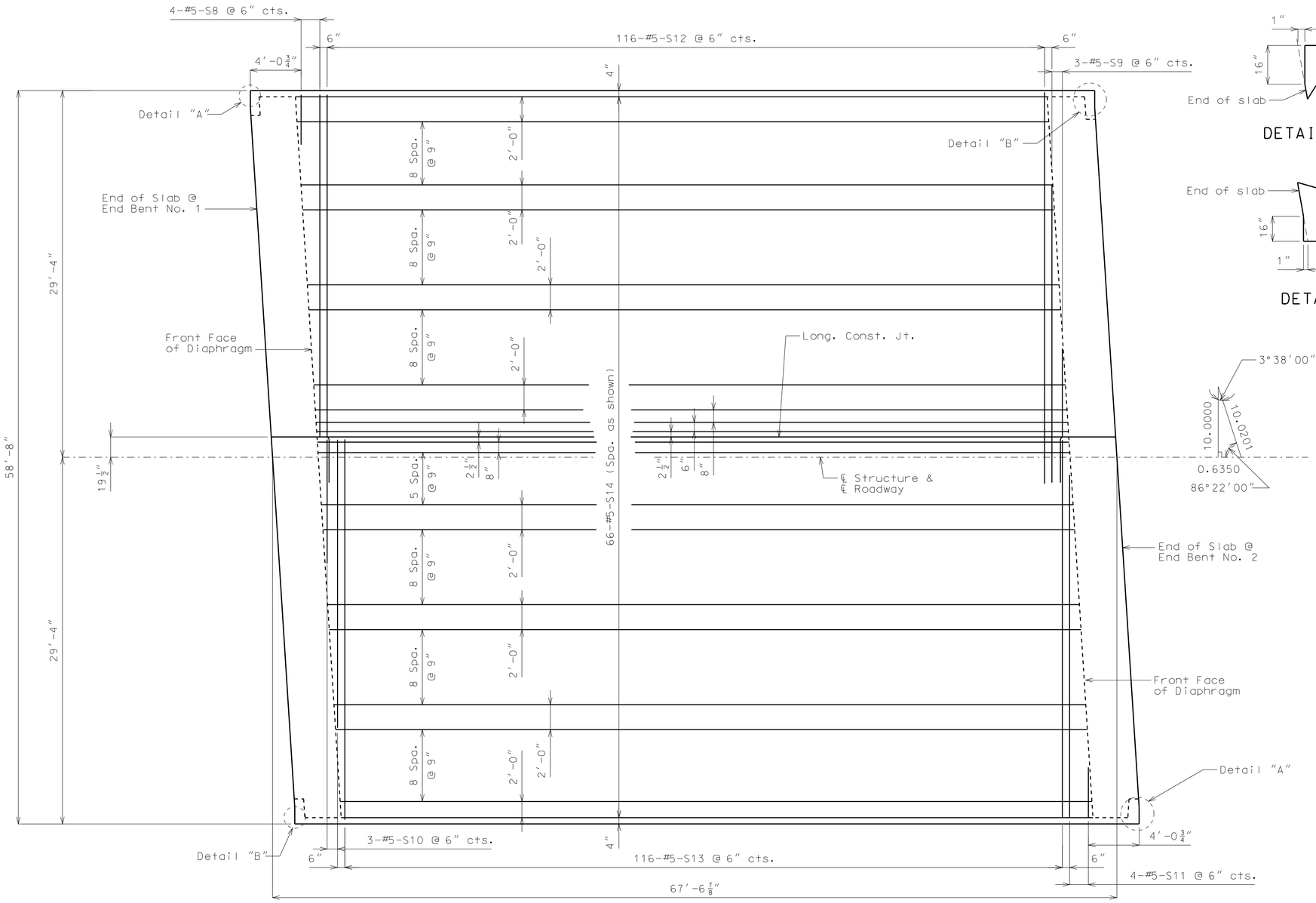


SPAN (1-2)

## PLAN OF SLAB SHOWING BOTTOM REINFORCEMENT

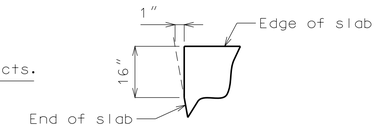


DETAIL "A"

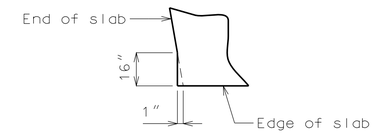


DETAIL "B"




Notes:

Longitudinal slab dimensions are measured horizontally.

For Typical Section Thru Slab, see Sheet No. 1.

For Details and Reinforcement of Safety Barrier Curbs, see Sheets No. 9 thru 14.

For Plan of Slab Showing Top Reinforcement, see Sheet No. 6.

For Optional Stay-in-Place Form Details, see Sheet No. 3.

Slab shall be poured from end to end at a minimum rate of 25 cu. yd./hr.

Alternate pour sequences may be submitted to the engineer for approval. Keyed construction joints shall be provided between pours.

Slab is to be considered at a uniform depth as shown on the plans. Haunching will vary.

Deflection Note:

The contractor shall determine dead load deflections and haunching based on field measurements and/or existing bridge plans and may be adjusted based on the difference between the new and existing dead load weights.

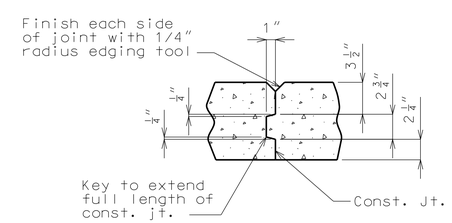


## SLAB CONSTRUCTION JOINT DETAIL

Detailed Oct. 2012
Checked Dec. 2012

Note: This drawing is not to scale. Follow dimensions.



"THIS MEDIA SHOULD NOT BE CONSIDERED A CERTIFIED DOCUMENT."

| DATE PREPARED | |
|---|---|
| 1/17/2013 | |
| ROUTE | STATE |
| I-35 | MO |
| DISTRICT | SHEET NO. |
| BR | 7 |
| COUNTY | |
| JACKSON | |
| JOB NO. | |
| J4I2371 | |
| CONTRACT ID. | |
| PROJECT NO. | |
| BRIDGE NO. | |
| L07817 | |

| DATE | DESCRIPTION |
|---|---|
| | |

IF A SEAL IS PRESENT ON THIS SHEET IT HAS BEEN ELECTRONICALLY SEALED AND DATED.

MISSOURI HIGHWAYS AND TRANSPORTATION COMMISSION
105 WEST CAPITOL
JEFFERSON CITY, MO 65102
1-888-ASK-MODOT (1-888-275-6636)

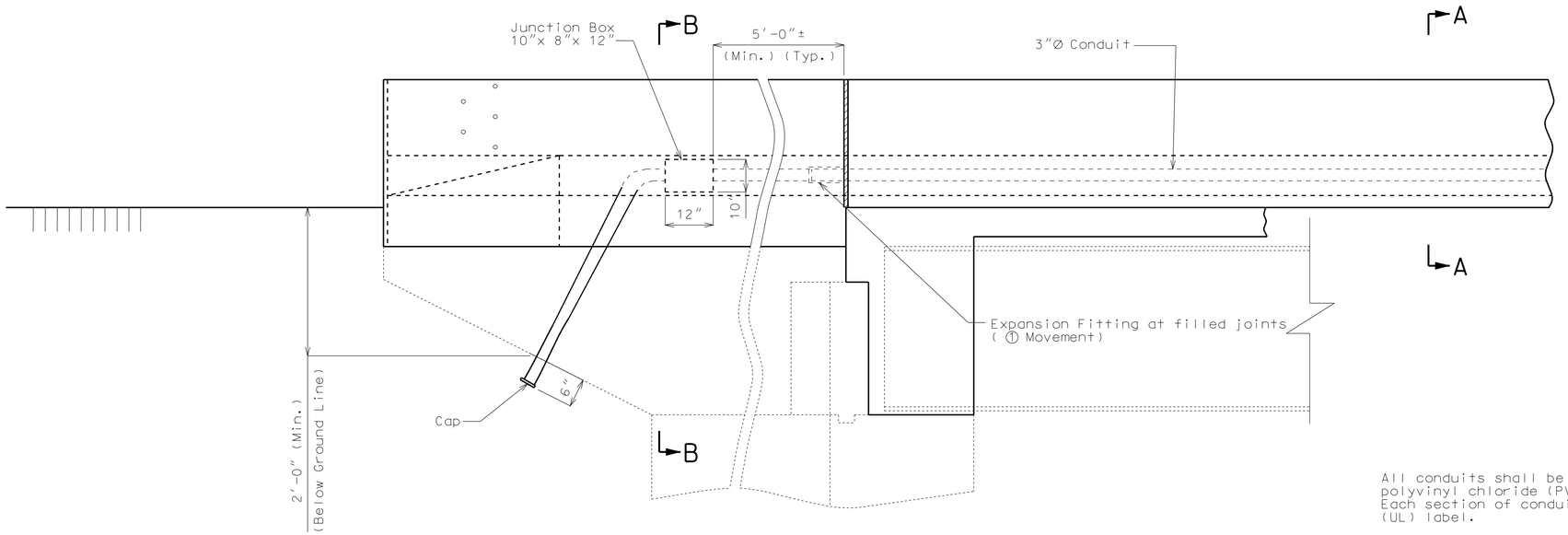


## PART ELEVATION OF JUNCTION BOX AT END BENT

(End Bent No. 1 shown, End Bent No. 2 similar) (right side shown, left side similar)

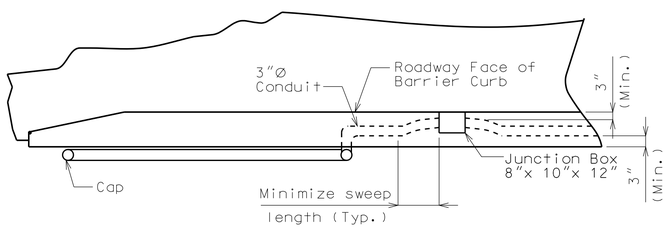


## PART PLAN SHOWING LOCATION OF JUNCTION BOX AT END BENT

(End Bent No. 1 shown, End Bent No. 2 similar)
(Right side shown, left side similar)

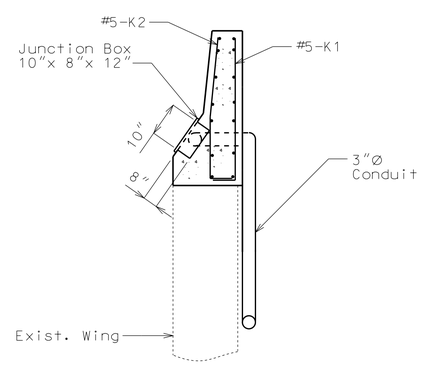


## PART SECTION B-B

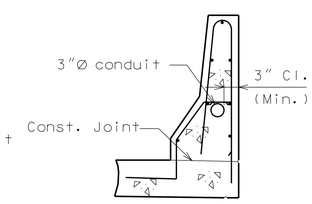


## PART SECTION A-A

All conduits shall be rigid nonmetallic schedule 40 heavy wall polyvinyl chloride (PVC) with 3" minimum cover in concrete. Each section of conduit shall bear the Underwriters Laboratories (UL) label.

Shift reinforcing steel in field where necessary to clear conduit and junction boxes.

Expansion fittings shall be placed as shown and set in accordance with the manufacturer's requirements and based on the air temperature at the time of setting given an estimated total expansion movement of 1 at filled joints using a maximum temperature range of 150°F and a maximum temperature of 120°F.

All end bent junction boxes shall be PVC molded in accordance with Sec 1062 and designed for flush mounting. The conduit terminations shall be permanent or separable. The terminations and covers shall be of watertight construction and shall meet requirements for NEMA 4 enclosure.

Drainage shall be provided at low points or other critical locations of all conduits and all junction boxes in accordance with Sec 707. All conduits shall be sloped to drain where possible.

Payment for furnishing and installing Conduit System, complete-in-place, will be considered completely covered by the contract lump sum price for Conduit System on Structure.

Placement of junction boxes and covers, complete-in-place, shall be flush with the roadway face of the safety barrier curb. Junction boxes and covers may be recessed up to $\frac{1}{4}$".

Final location of junction boxes to be determined by the engineer.

All conduit clamps shall be commercially-available, nonmetallic conduit clamps and approved by the engineer.

All conduits not encased shall be secured to concrete with nonmetallic clamps at about 5'-0" cts. Concrete anchors for clamps shall be in accordance with Federal Specification FF-S-325, Group II, Type 4, Class I and shall be galvanized in accordance with ASTM A153, B695-91 Class 50 or stainless steel. Minimum embedment in concrete shall be $1\frac{3}{4}$". The supplier shall furnish a manufacturer's certification that the concrete anchors meet the required material and galvanizing specifications

1 1" at End Bent No. 1

3" at End Bent No. 2

# DETAILS OF CONDUIT SYSTEM ON STRUCTURE

Detailed Oct. 2012
Checked Dec. 2012

Note: This drawing is not to scale. Follow dimensions.



"THIS MEDIA SHOULD NOT BE CONSIDERED A CERTIFIED DOCUMENT."

| | |
|---|---|
| DATE PREPARED | 1/17/2013 |
| ROUTE | I-35 |
| STATE | MO |
| DISTRICT | BR |
| SHEET NO. | 8 |
| COUNTY | JACKSON |
| JOB NO. | J4I2371 |
| CONTRACT ID. | |
| PROJECT NO. | |
| BRIDGE NO. | L07817 |

| DATE | DESCRIPTION |
|---|---|

MISSOURI HIGHWAYS AND TRANSPORTATION COMMISSION

105 WEST CAPITOL
JEFFERSON CITY, MO 65102
1-888-ASK-MODOT (1-888-275-6636)

IF A SEAL IS PRESENT ON THIS SHEET IT HAS BEEN ELECTRONICALLY SEALED AND DATED.

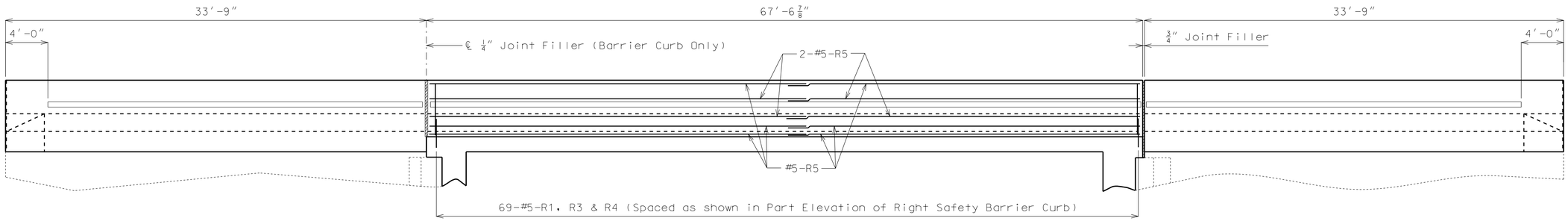


SPAN (1-2)

## ELEVATION OF RIGHT SAFETY BARRIER CURB

Note: Longitudinal dimensions are horizontal.

Conduit not shown for clarity.

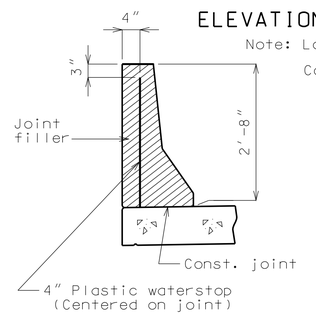


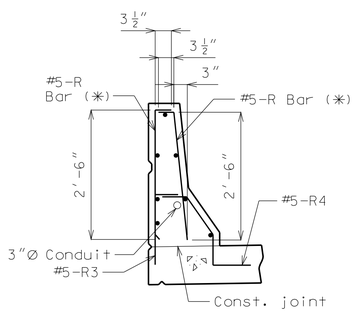


## R-BAR PERMISSIBLE ALTERNATE SHAPE

(✳) The R1 bar may be separated into two bars as shown, at the contractor's option, only when slip forming is not used. (All dimensions are out to out.)

## DETAILS OF PLASTIC WATERSTOP

Notes:

Plastic waterstop shall be placed in all safety barrier curb filled joints, except structures with superelevation, use on all lower safety barrier curb joints only.

Cost of plastic waterstop, complete in place, will be considered completely covered by the contract unit price for Safety Barrier Curb.

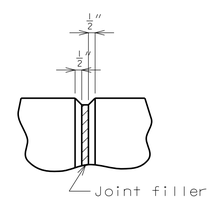


## FILLED JOINT DETAIL

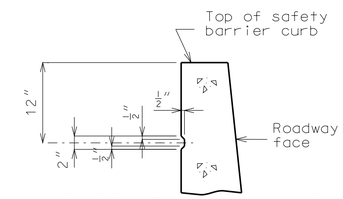


## PART SECTION SHOWING RUSTICATION DETAILS

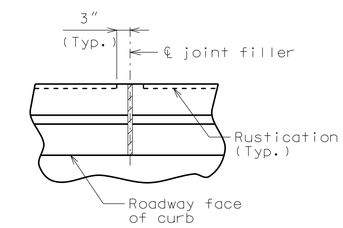


## PART PLAN SHOWING SAFETY BARRIER CURB JOINT

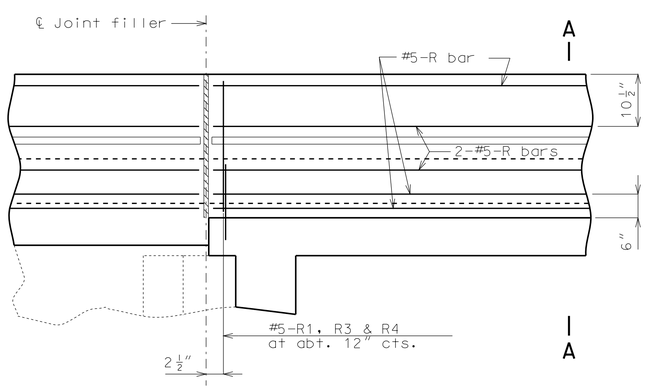


## PART ELEVATION OF RIGHT SAFETY BARRIER CURB (CAST-IN-PLACE CONVENTIONAL FORMING OPTION)

Note: Conduit not shown for clarity.

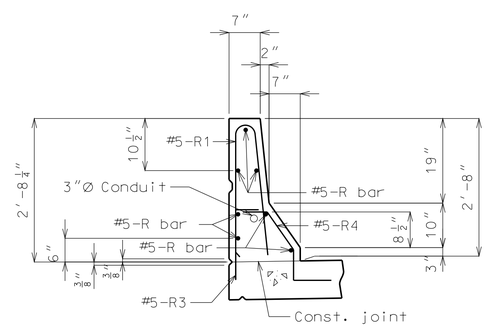


## PART SECTION A-A

Notes:

Use a minimum lap of 2′-11″ for #5 horizontal safety barrier curb bars.

The cross-sectional area above the slab = 2.27 sq. ft.

Notes:

Top of safety barrier curb shall be built parallel to grade with barrier curb joints (except at end bents) normal to grade.

All exposed edges of safety barrier curb shall have either a 1/2″ radius or a 3/8″ bevel, unless otherwise noted.

Payment for all concrete and reinforcement, complete-in-place, will be considered completely covered by the contract unit price for safety barrier curb per linear foot.

Concrete in the safety barrier curb shall be Class B-1.

Measurement of safety barrier curb is to the nearest linear foot for each structure, measured along the outside top of slab from end of exist. wing to end of exist. wing.

Concrete traffic barrier delineators shall be placed on top of the safety barrier curb as shown on Missouri Standard Plans 617.10 and in accordance with Sec 617. Concrete traffic barrier delineators will be considered completely covered by the contract unit price for "Safety Barrier Curb."

For details of Conduit System on Structure, see Sheet No. 8.

Detailed Oct. 2012
Checked Dec. 2012

Note: This drawing is not to scale. Follow dimensions.



"THIS MEDIA SHOULD NOT BE CONSIDERED A CERTIFIED DOCUMENT."

| | |
|---|---|
| DATE PREPARED | 1/17/2013 |
| ROUTE | I-35 |
| STATE | MO |
| DISTRICT | BR |
| SHEET NO. | 9 |
| COUNTY | JACKSON |
| JOB NO. | J4I2371 |
| CONTRACT ID. | |
| PROJECT NO. | |
| BRIDGE NO. | L07817 |

| DATE | DESCRIPTION |
|---|---|
| | |

MISSOURI HIGHWAYS AND TRANSPORTATION COMMISSION
105 WEST CAPITOL
JEFFERSON CITY, MO 65102
1-888-ASK-MODOT (1-888-275-6636)

IF A SEAL IS PRESENT ON THIS SHEET IT HAS BEEN ELECTRONICALLY SEALED AND DATED.

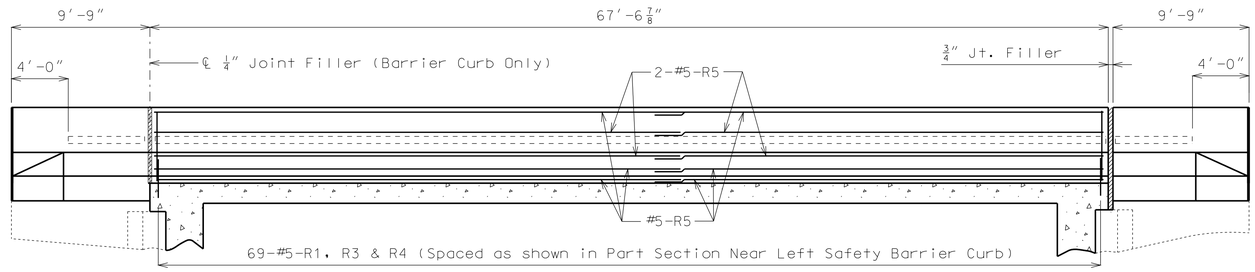


SPAN (1-2)

## SECTION NEAR LEFT SAFETY BARRIER CURB

Note: Longitudinal dimensions are horizontal.
Conduit not shown for clarity.

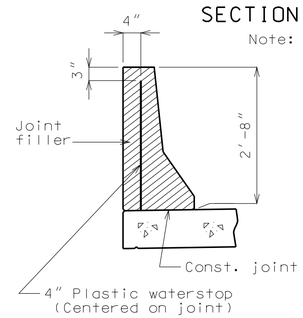


## DETAILS OF PLASTIC WATERSTOP

Notes:

Plastic waterstop shall be placed in all safety barrier curb filled joints, except structures with superelevation, use on all lower safety barrier curb joints only.

Cost of plastic waterstop, complete in place, will be considered completely covered by the contract unit price for Safety Barrier Curb.

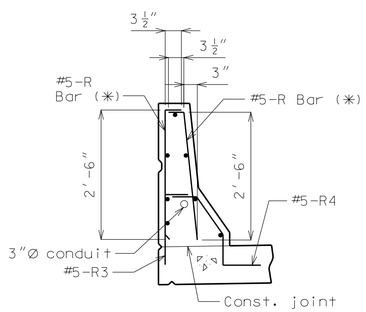


## R-BAR PERMISSIBLE ALTERNATE SHAPE

(*) The R1 bar may be separated into two bars as shown, at the contractor's option, only when slip forming is not used. (All dimensions are out to out.)

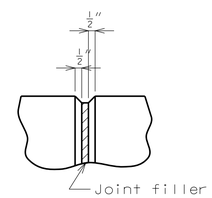


## FILLED JOINT DETAIL

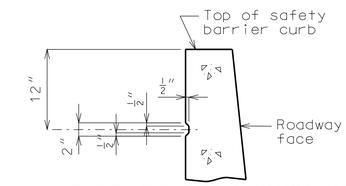


## PART SECTION SHOWING RUSTICATION DETAILS

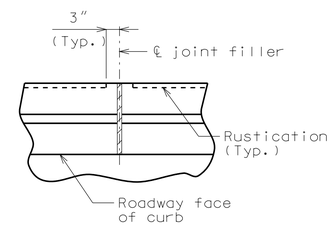


## PART PLAN SHOWING SAFETY BARRIER CURB JOINT

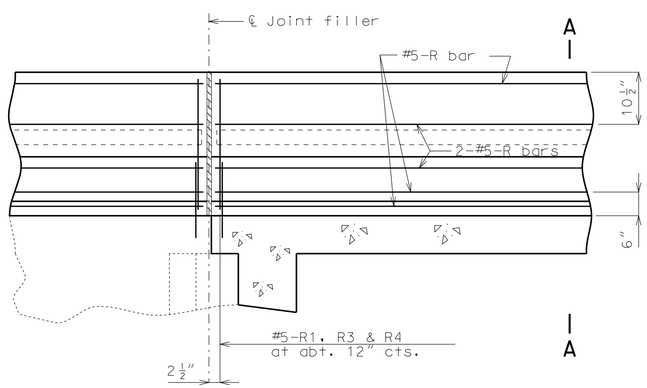


## PART SECTION NEAR LEFT SAFETY BARRIER CURB (CAST-IN-PLACE CONVENTIONAL FORMING OPTION)

Note: Conduit not shown for clarity.

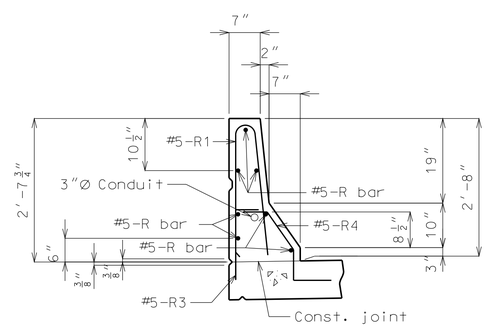


## PART SECTION A-A

Notes:

Use a minimum lap of 2'-11" for #5 horizontal safety barrier curb bars.

The cross-sectional area above the slab = 2.24 sq. ft.

Notes:

Top of safety barrier curb shall be built parallel to grade with barrier curb joints (except at end bents) normal to grade.

All exposed edges of safety barrier curb shall have either a 1/2" radius or a 3/8" bevel, unless otherwise noted.

Payment for all concrete and reinforcement, complete-in-place, will be considered completely covered by the contract unit price for safety barrier curb per linear foot.

Concrete in the safety barrier curb shall be Class B-1.

Measurement of safety barrier curb is to the nearest linear foot for each structure, measured along the outside top of slab from end of exist. wing to end of exist. wing.

Concrete traffic barrier delineators shall be placed on top of the safety barrier curb as shown on Missouri Standard Plans 617.10 and in accordance with Sec 617. Concrete traffic barrier delineators will be considered completely covered by the contract unit price for "Safety Barrier Curb."

For details of Conduit System on Structure, see Sheet No. 8.

Detailed Oct. 2012
Checked Dec. 2012

Note: This drawing is not to scale. Follow dimensions.



"THIS MEDIA SHOULD NOT BE CONSIDERED A CERTIFIED DOCUMENT."

| DATE PREPARED | |
|---|---|
| 1/17/2013 | |
| ROUTE | STATE |
| I-35 | MO |
| DISTRICT | SHEET NO. |
| BR | 10 |
| COUNTY | |
| JACKSON | |
| JOB NO. | |
| J4I2371 | |
| CONTRACT ID. | |
| PROJECT NO. | |
| BRIDGE NO. | |
| L07817 | |

| DATE | DESCRIPTION |
|---|---|

MISSOURI HIGHWAYS AND TRANSPORTATION COMMISSION
105 WEST CAPITOL
JEFFERSON CITY, MO 65102
1-888-ASK-MODOT (1-888-275-6636)

IF A SEAL IS PRESENT ON THIS SHEET IT HAS BEEN ELECTRONICALLY SEALED AND DATED.

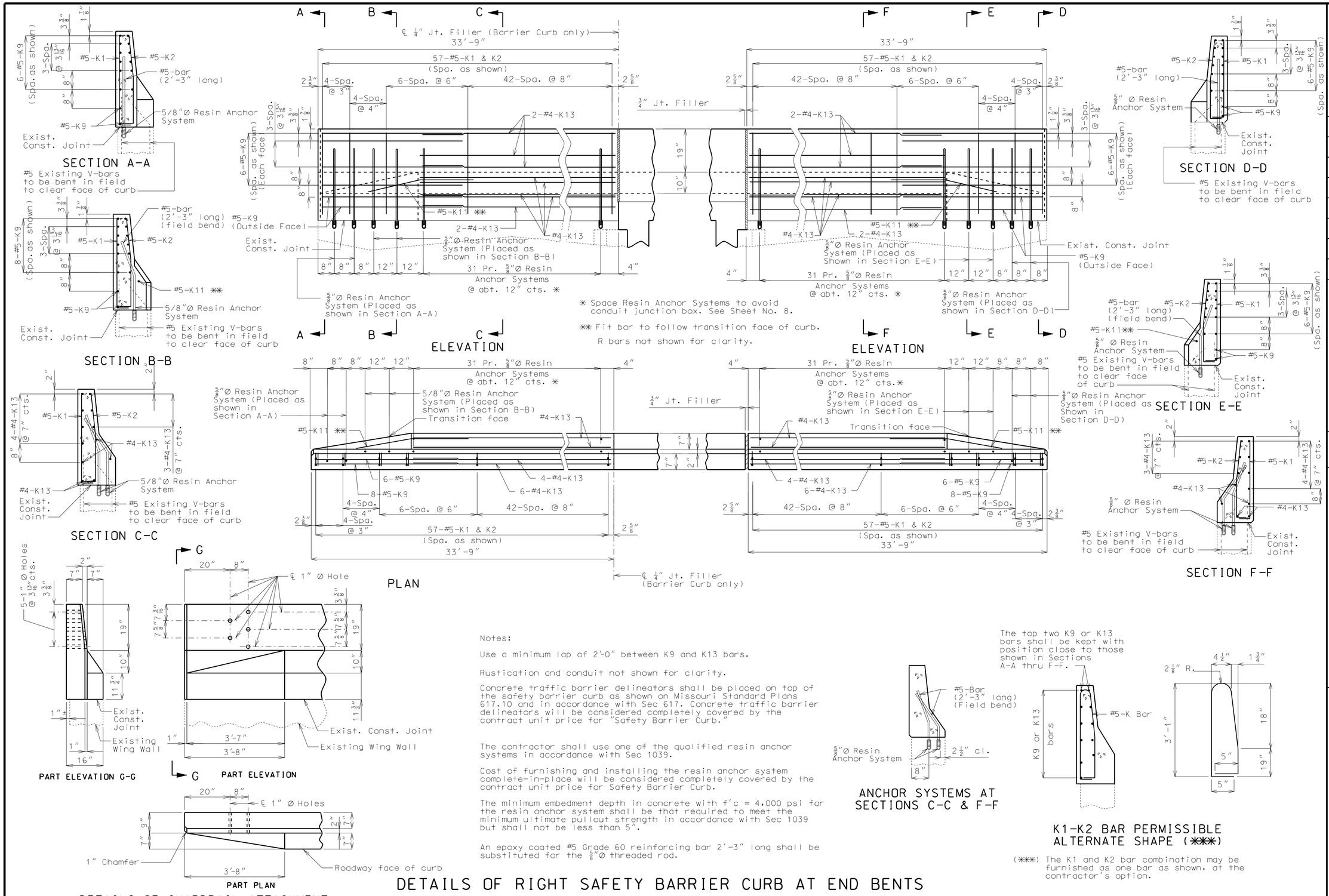


Notes:

Use a minimum lap of 2'-0" between K9 and K13 bars.

Rustication and conduit not shown for clarity.

Concrete traffic barrier delineators shall be placed on top of the safety barrier curb as shown on Missouri Standard Plans 617.10 and in accordance with Sec 617. Concrete traffic barrier delineators will be considered completely covered by the contract unit price for "Safety Barrier Curb."

The contractor shall use one of the qualified resin anchor systems in accordance with Sec 1039.

Cost of furnishing and installing the resin anchor system complete-in-place will be considered completely covered by the contract unit price for Safety Barrier Curb.

The minimum embedment depth in concrete with f'c = 4,000 psi for the resin anchor system shall be that required to meet the minimum ultimate pullout strength in accordance with Sec 1039 but shall not be less than 5".

An epoxy coated #5 Grade 60 reinforcing bar 2'-3" long shall be substituted for the 5/8"Ø threaded rod.




(✳✳✳) The K1 and K2 bar combination may be furnished as one bar as shown, at the contractor's option.

# DETAILS OF RIGHT SAFETY BARRIER CURB AT END BENTS

Detailed Oct. 2012
Checked Dec. 2012

Note: This drawing is not to scale. Follow dimensions.



"THIS MEDIA SHOULD NOT BE CONSIDERED A CERTIFIED DOCUMENT."

| DATE PREPARED | |
|---|---|
| 1/17/2013 | |
| ROUTE | STATE |
| I-35 | MO |
| DISTRICT | SHEET NO. |
| BR | 11 |
| COUNTY | |
| JACKSON | |
| JOB NO. | |
| J4I2371 | |
| CONTRACT ID. | |
| PROJECT NO. | |
| BRIDGE NO. | |
| L07817 | |

DESCRIPTION

DATE

MISSOURI HIGHWAYS AND TRANSPORTATION COMMISSION
105 WEST CAPITOL
JEFFERSON CITY, MO 65102
1-888-ASK-MODOT (1-888-275-6636)

IF A SEAL IS PRESENT ON THIS SHEET IT HAS BEEN ELECTRONICALLY SEALED AND DATED.

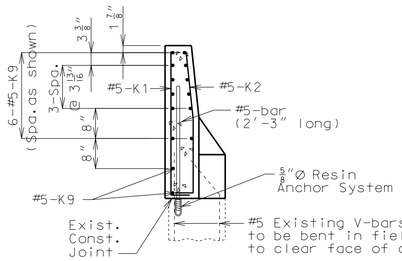


SECTION A-A

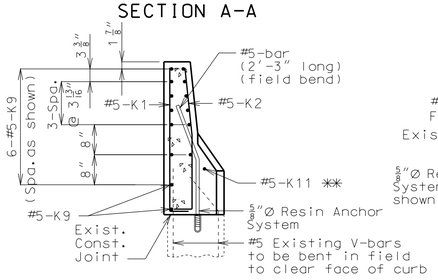


SECTION B-B

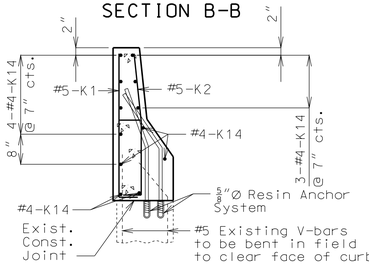


SECTION C-C

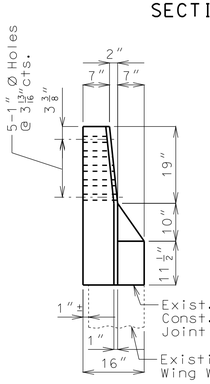


PART ELEVATION G-G

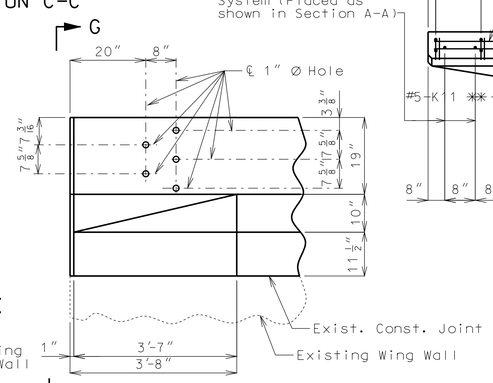


PART ELEVATION

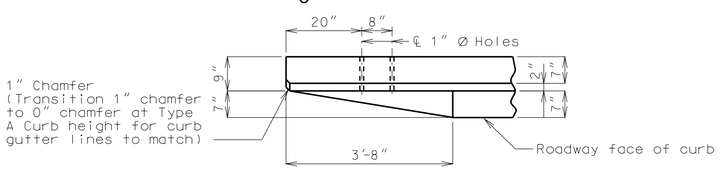


PART PLAN

DETAILS OF GUARDRAIL ATTACHMENT

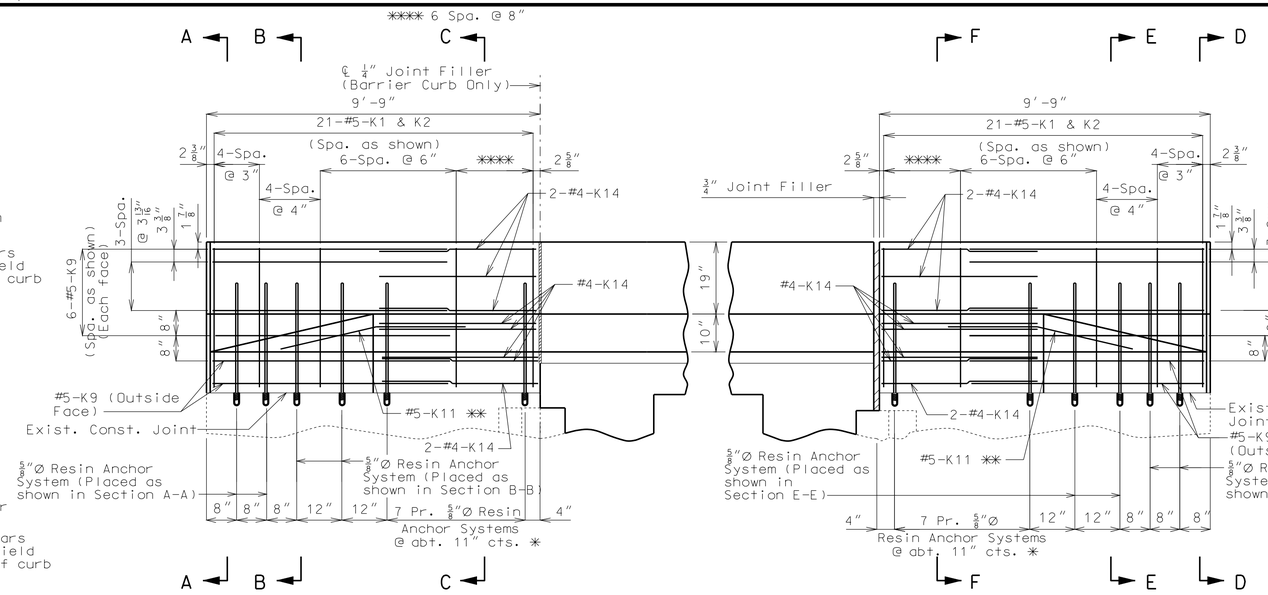


ELEVATION

ELEVATION

✱ Space Resin Anchor Systems to avoid conduit junction box. See Sheet No. 8.

✱✱ Fit bar to follow transition face of curb.

R bars not shown for clarity.

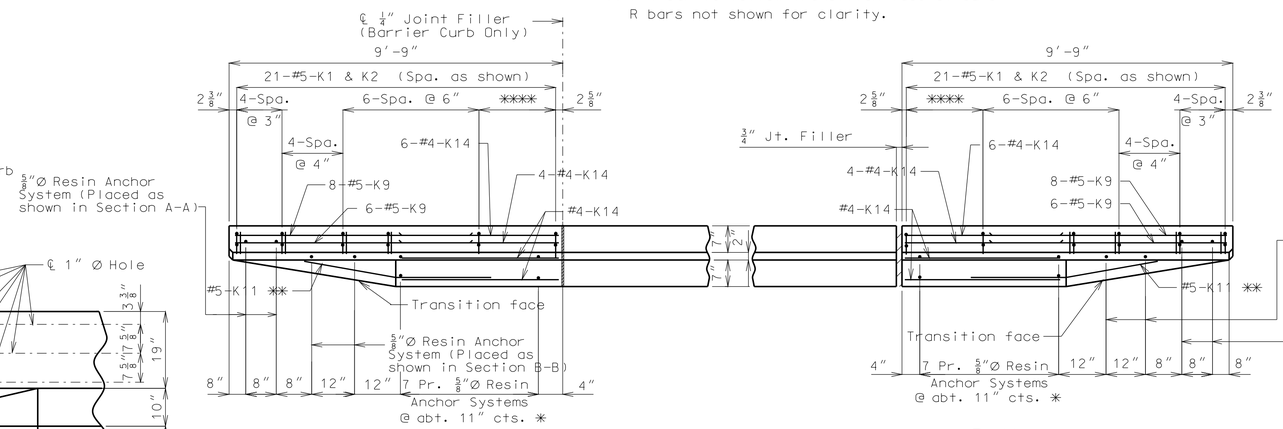


PLAN

PLAN

Notes:

Use a minimum lap of 2'-0" between K9 and K14 bars.

Rustication and conduit not shown for clarity.

Concrete traffic barrier delineators shall be placed on top of the safety barrier curb as shown on Missouri Standard Plans 617.10 and in accordance with Sec 617. Concrete traffic barrier delineators will be considered completely covered by the contract unit price for "Safety Barrier Curb."

The contractor shall use one of the qualified resin anchor systems in accordance with Sec 1039.

Cost of furnishing and installing the resin anchor system complete-in-place will be considered completely covered by the contract unit price for Safety Barrier Curb.

The minimum embedment depth in concrete with f'c = 4,000 psi for the resin anchor system shall be that required to meet the minimum ultimate pullout strength in accordance with Sec 1039 but shall not be less than 5".

An epoxy coated #5 Grade 60 reinforcing bar 2'-3" long shall be substituted for the 5/8"Ø threaded rod.

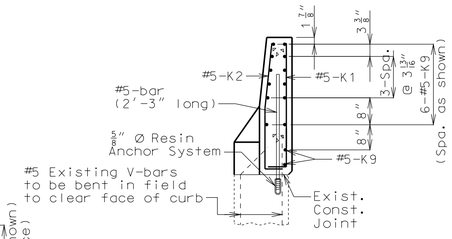


SECTION D-D

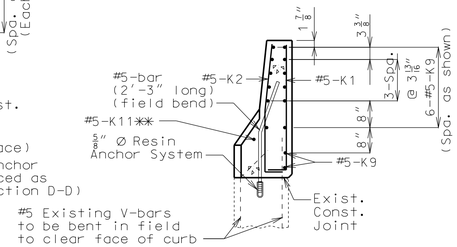


SECTION E-E

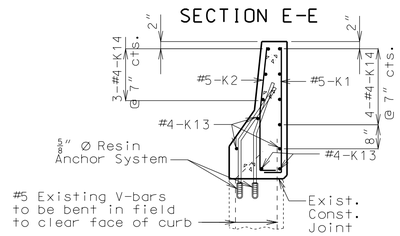


SECTION F-F

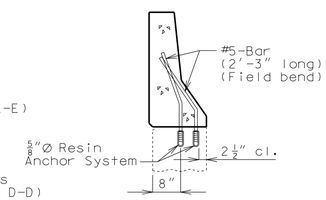


ANCHOR SYSTEMS AT SECTIONS C-C & F-F

The top two K9 or K14 bars shall be kept with position close to those shown in Sections A-A thru F-F.

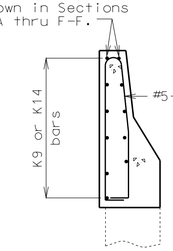


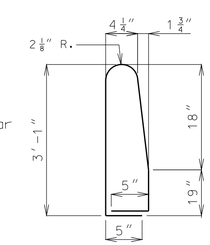


K1-K2 BAR PERMISSIBLE ALTERNATE SHAPE (✱✱✱)

(✱✱✱) The K1 & K2 bar combinations may be furnished as one bar as shown, at the contractor's option.

# DETAILS OF LEFT SAFETY BARRIER CURB AT END BENTS

Detailed Oct. 2012
Checked Dec. 2012

Note: This drawing is not to scale. Follow dimensions.



"THIS MEDIA SHOULD NOT BE CONSIDERED A CERTIFIED DOCUMENT."

| DATE PREPARED | |
|---|---|
| 1/17/2013 | |
| ROUTE | STATE |
| I-35 | MO |
| DISTRICT | SHEET NO. |
| BR | 12 |
| COUNTY | |
| JACKSON | |
| JOB NO. | |
| J4I2371 | |
| CONTRACT ID. | |
| PROJECT NO. | |
| BRIDGE NO. | |
| L07817 | |

| DATE | DESCRIPTION |
|---|---|
| | |

MISSOURI HIGHWAYS AND TRANSPORTATION COMMISSION
105 WEST CAPITOL
JEFFERSON CITY, MO 65102
1-888-ASK-MODOT (1-888-275-6636)

IF A SEAL IS PRESENT ON THIS SHEET IT HAS BEEN ELECTRONICALLY SEALED AND DATED.

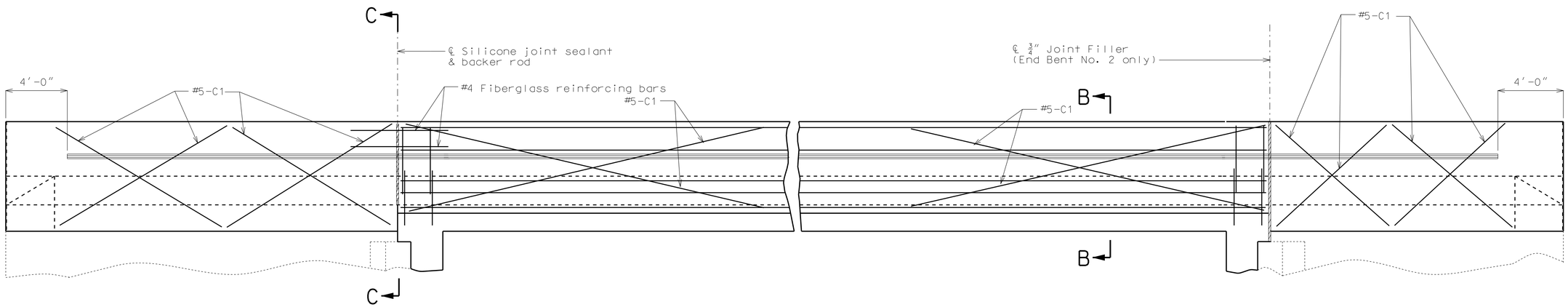


TYPICAL ELEVATION OF RIGHT SAFETY BARRIER CURB AT SUPPORT LOCATIONS
(OPTIONAL SLIP-FORM BRIDGE SAFETY BARRIER CURB)

Notes:

Top of safety barrier curb shall be built parallel to grade with barrier curb joints (except at end bents) normal to grade.

Payment for all concrete and reinforcement, complete in place, will be considered completely covered by the contract unit price for safety barrier curb per linear foot.

Concrete in the safety barrier curb shall be Class B-1.

Measurement of safety barrier curb is to the nearest linear foot for each structure, measured along the outside top of slab from end of exist. wing to end of exist. wing.

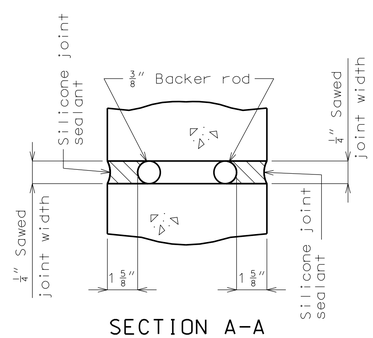


SECTION A-A

Notes:

Joint sealant and backer rods shall be used on all slip-form barrier curbs instead of joint filler at End Bent No. 1 only and shall be in accordance with Sec 717 for silicone joint sealant for saw cut and formed joints.

Plastic waterstop shall not be used with slip-form option.

C Bars (Slip-form option only) shall be used in addition to cast-in-place conventional forming reinforcement for bridge safety barrier curb.

For Slip-Form option, all sides of the safety barrier curb shall have a vertically broomed finish and the curb top shall have a transversely broomed finish.

Concrete traffic barrier delineators shall be placed on top of the safety barrier curb as shown on Missouri Standard Plans 617.10 and in accordance with Sec 617. Concrete traffic barrier delineators will be considered completely covered by the contract unit price for "Safety Barrier Curb".

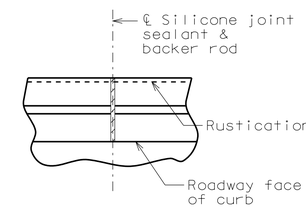


PART PLAN SHOWING SAFETY BARRIER CURB JOINT

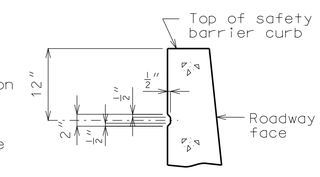


PART SECTION SHOWING RUSTICATION DETAILS

RUSTICATION DETAIL

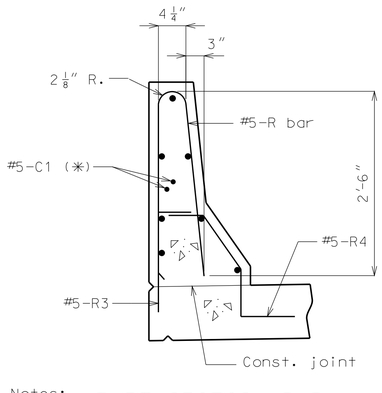


Notes:
(✳) Each side of joint location.

PART SECTION B-B

Note:

Cost of silicone joint sealant and backer rod, complete in place, will be considered completely covered by the contract unit price for Safety Barrier Curb.

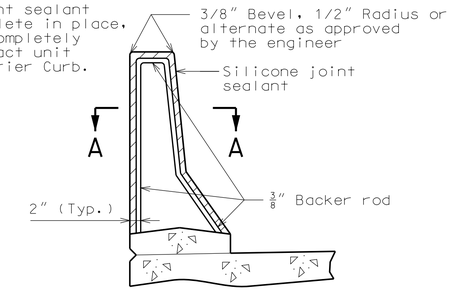


SECTION THRU JOINT

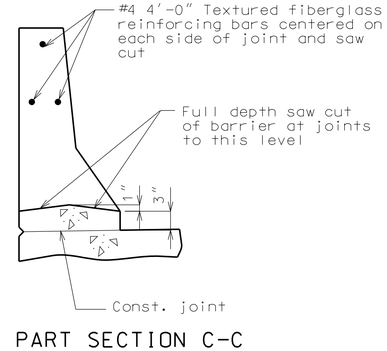


PART SECTION C-C

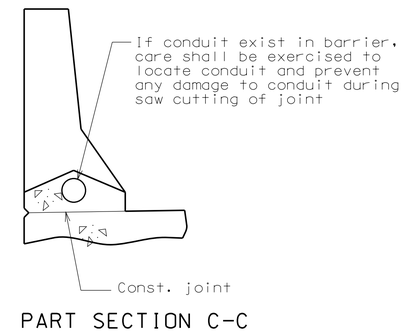


PART SECTION C-C
(Use when conduit required)

OPTIONAL SLIP-FORM BRIDGE SAFETY BARRIER CURB

Detailed Oct. 2012
Checked Dec. 2012

Note: This drawing is not to scale. Follow dimensions.



"THIS MEDIA SHOULD NOT BE CONSIDERED A CERTIFIED DOCUMENT."

| DATE PREPARED | |
|---|---|
| 1/17/2013 | |
| ROUTE | STATE |
| I-35 | MO |
| DISTRICT | SHEET NO. |
| BR | 13 |
| COUNTY | |
| JACKSON | |
| JOB NO. | |
| J4I2371 | |
| CONTRACT ID. | |
| PROJECT NO. | |
| BRIDGE NO. | |
| L07817 | |

| DESCRIPTION | DATE |
|---|---|
| | |

MISSOURI HIGHWAYS AND TRANSPORTATION COMMISSION
105 WEST CAPITOL
JEFFERSON CITY, MO 65102
1-888-ASK-MODOT (1-888-275-6636)

IF A SEAL IS PRESENT ON THIS SHEET IT HAS BEEN ELECTRONICALLY SEALED AND DATED.

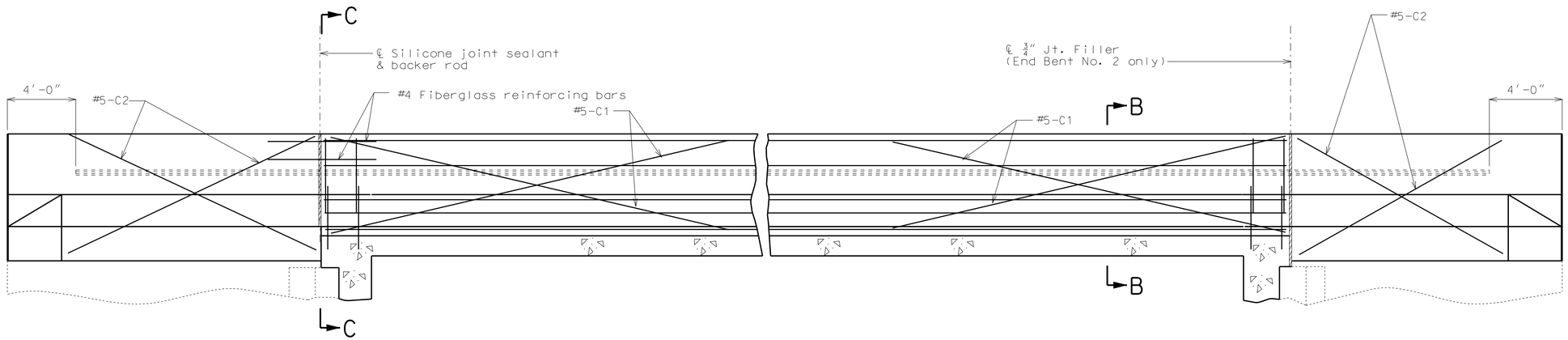


## TYPICAL SECTION NEAR LEFT SAFETY BARRIER CURB AT SUPPORT LOCATIONS (OPTIONAL SLIP-FORM BRIDGE SAFETY BARRIER CURB)

Notes:

Top of safety barrier curb shall be built parallel to grade with barrier curb joints (except at end bents) normal to grade.

Payment for all concrete and reinforcement, complete in place, will be considered completely covered by the contract unit price for safety barrier curb per linear foot.

Concrete in the safety barrier curb shall be Class B-1.

Measurement of safety barrier curb is to the nearest linear foot for each structure, measured along the outside top of slab from end of exist. wing to end of exist. wing.

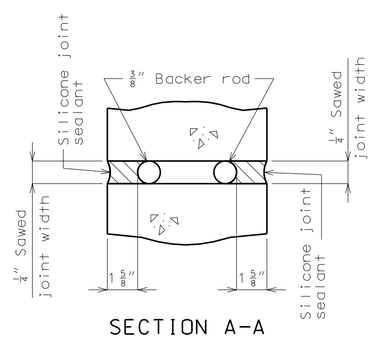


SECTION A-A

Notes:

Joint sealant and backer rods shall be used on all slip-form barrier curbs instead of joint filler at End Bent No. 1 only and shall be in accordance with Sec 717 for silicone joint sealant for saw cut and formed joints.

Plastic waterstop shall not be used with slip-form option.

C Bars (Slip-form option only) shall be used in addition to cast-in-place conventional forming reinforcement for bridge safety barrier curb.

For Slip-Form option, all sides of the safety barrier curb shall have a vertically broomed finish and the curb top shall have a transversely broomed finish.

Concrete traffic barrier delineators shall be placed on top of the safety barrier curb as shown on Missouri Standard Plans 617.10 and in accordance with Sec 617. Concrete traffic barrier delineators will be considered completely covered by the contract unit price for "Safety Barrier Curb".

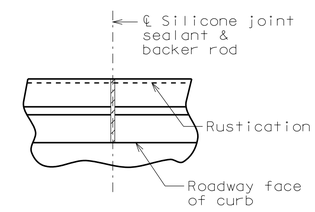


PART PLAN SHOWING SAFETY BARRIER CURB JOINT

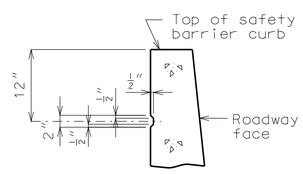


PART SECTION SHOWING RUSTICATION DETAILS

RUSTICATION DETAIL

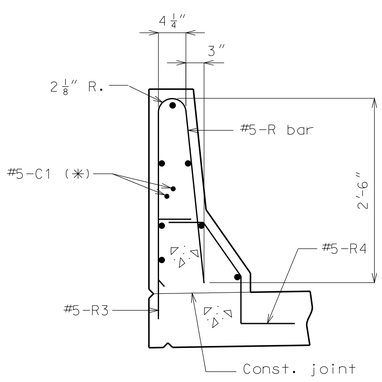


Notes:
(✳) Each side of joint location.

PART SECTION B-B

Note:

Cost of silicone joint sealant and backer rod, complete in place, will be considered completely covered by the contract unit price for Safety Barrier Curb.

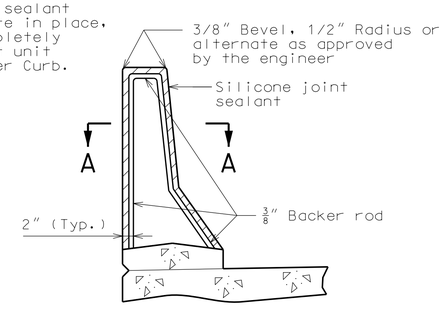


SECTION THRU JOINT

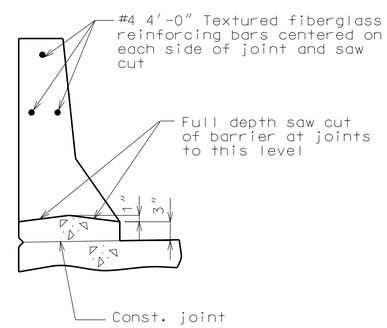


PART SECTION C-C

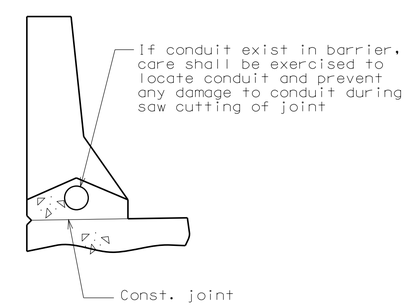


PART SECTION C-C
(Use when conduit required)

## OPTIONAL SLIP-FORM BRIDGE SAFETY BARRIER CURB

Detailed Oct. 2012
Checked Dec. 2012

Note: This drawing is not to scale. Follow dimensions.



"THIS MEDIA SHOULD NOT BE CONSIDERED A CERTIFIED DOCUMENT."

| | |
|---|---|
| DATE PREPARED | 1/17/2013 |
| ROUTE | I-35 |
| STATE | MO |
| DISTRICT | BR |
| SHEET NO. | 14 |
| COUNTY | JACKSON |
| JOB NO. | J4I2371 |
| CONTRACT ID. | |
| PROJECT NO. | |
| BRIDGE NO. | L07817 |

DESCRIPTION

DATE

IF A SEAL IS PRESENT ON THIS SHEET IT HAS BEEN ELECTRONICALLY SEALED AND DATED.

MISSOURI HIGHWAYS AND TRANSPORTATION COMMISSION
105 WEST CAPITOL
JEFFERSON CITY, MO 65102
1-888-ASK-MODOT (1-888-275-6636)

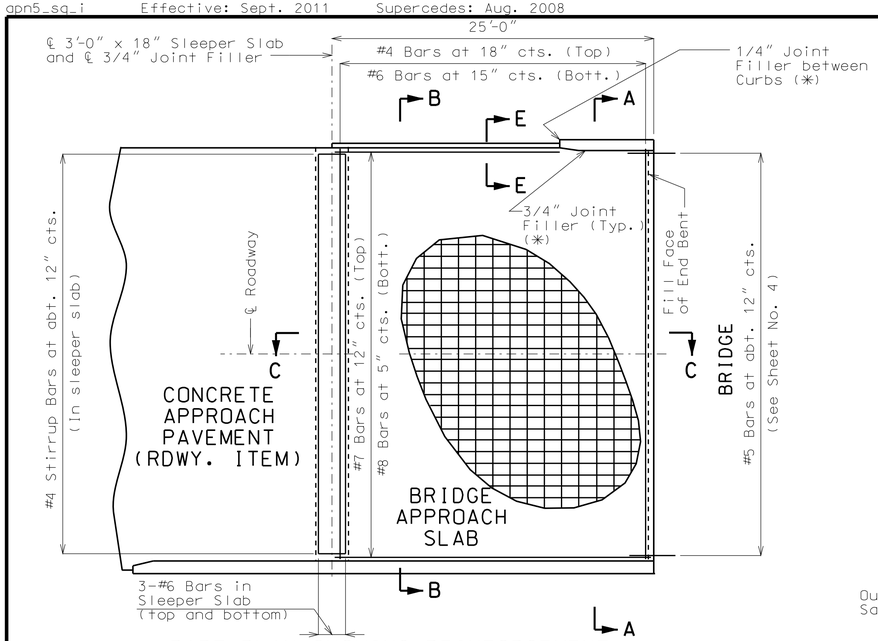


PART PLAN SHOWING REINFORCEMENT

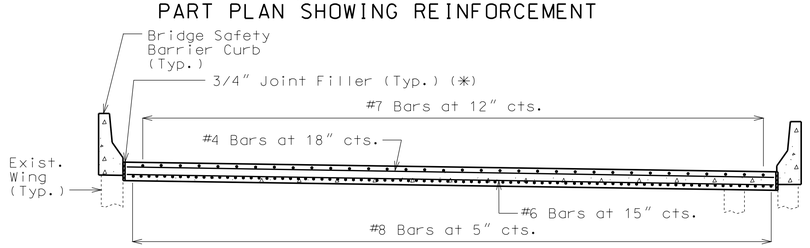


SECTION A-A

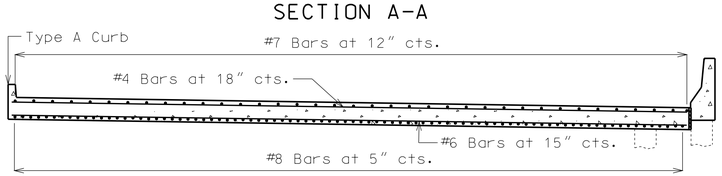


SECTION B-B

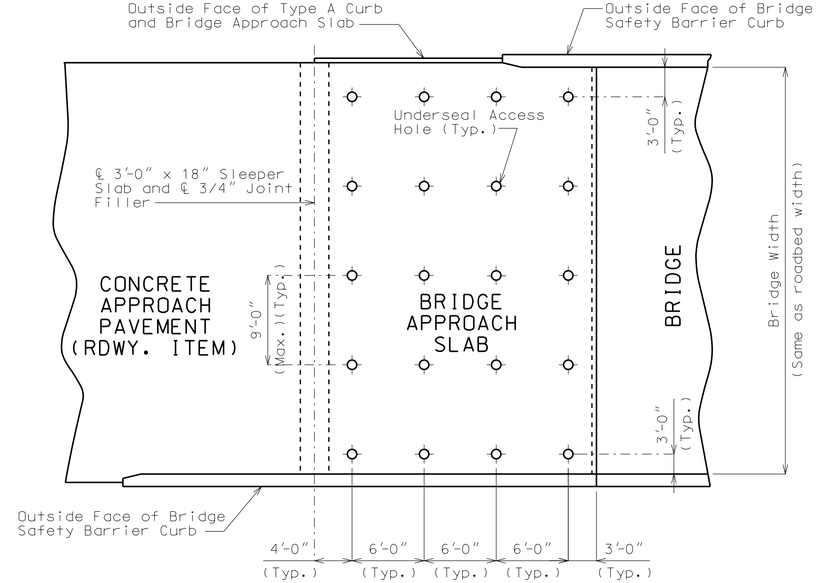


PART PLAN
(SHOWING TYPICAL UNDERSEAL ACCESS HOLE LOCATIONS)

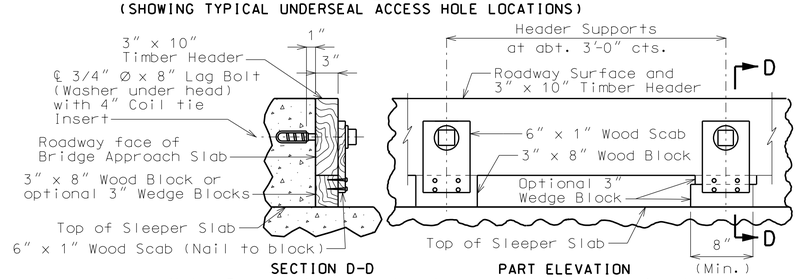


SECTION D-D PART ELEVATION

Note: Remove timber header when concrete pavement is placed.

DETAILS OF TIMBER HEADER

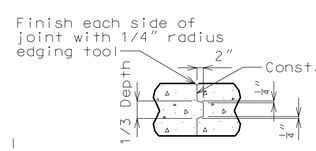


CONST. JOINT DETAIL
(IF REQUIRED)

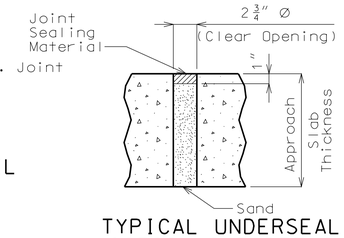


TYPICAL UNDERSEAL ACCESS HOLE DETAIL

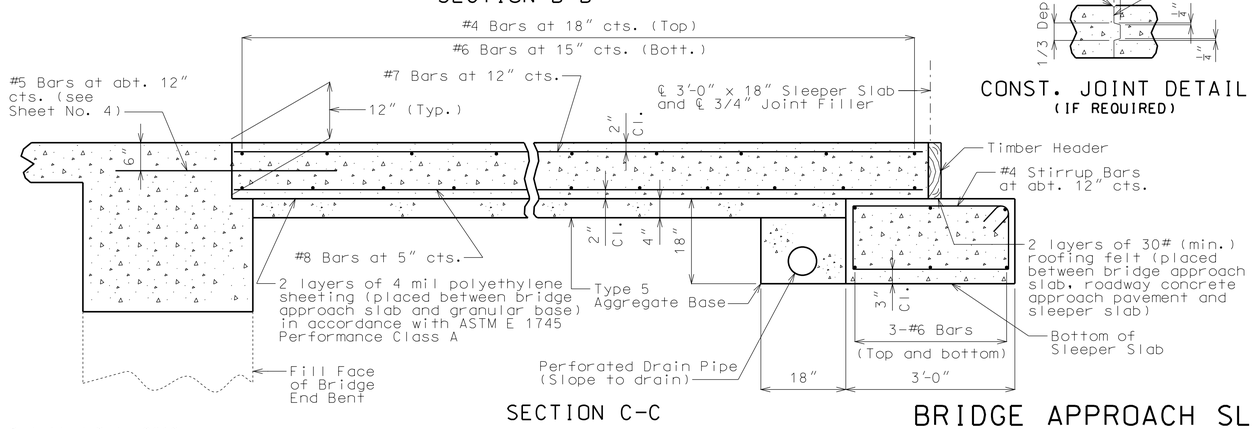


SECTION C-C

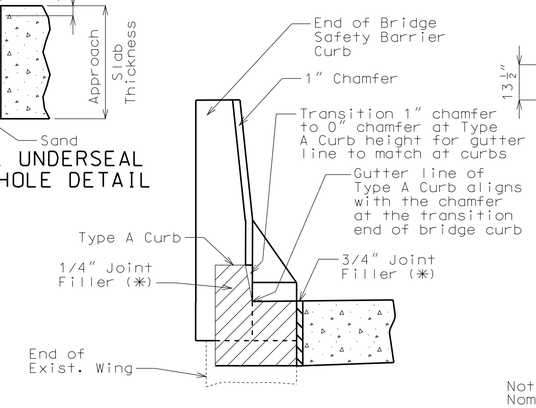


SECTION E-E
(BETWEEN LEFT CURBS)

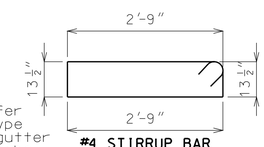


#4 STIRRUP BAR
(ACTUAL LENGTH = 8'-3")

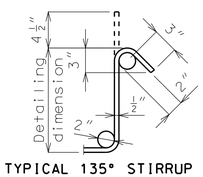


TYPICAL 135° STIRRUP HOOK DIMENSIONS BENDING DIAGRAM

Note: Nominal lengths are based on out to out dimensions shown in bending diagram and are listed for fabricators use (nearest inch).

## GENERAL NOTES:

All concrete for the bridge approach slab and sleeper slab shall be in accordance with Sec 503 (f'c = 4,000 psi).

All joint filler shall be in accordance with Sec 1057 for preformed fiber expansion joint filler, except as noted.

The reinforcing steel in the bridge approach slab and the sleeper slab shall be epoxy coated Grade 60 with Fy = 60,000 psi.

Minimum clearance to reinforcing steel shall be 1 1/2", unless otherwise shown.

The reinforcing steel in the bridge approach slab and the sleeper slab shall be continuous. The transverse reinforcing steel may be made continuous by lap splicing the #4 & #6 bars 18" and 2'-2", respectively.

Mechanical bar splices shall be in accordance with Sec 706.

(✱) Seal joint between vertical face of approach slab and exist. wing with "Silicone Joint Sealant for Saw Cut and Formed Joints" in accordance with Sec 717.

Hooks and bends shall be in accordance with the CRSI Manual of Standard Practice for Detailing Reinforced Concrete Structures, Stirrup and Tie Dimensions.

The contractor shall pour and satisfactorily finish the bridge or semi-deep slab before pouring the bridge approach slabs.

Longitudinal construction joints in approach slab and sleeper slab shall be aligned with longitudinal construction joints in bridge or semi-deep slab.

Payment for furnishing all materials, labor and excavation necessary to construct the approach slab, including the timber header, sleeper slab, underdrain, Type 5 aggregate base, joint filler and all other appurtenances and incidental work as shown on this sheet, complete in place, will be considered completely covered by the contract unit price for Bridge Approach Slab (Bridge) per square yard.

For Concrete Approach Pavement details, see roadway plans.

See Missouri Standard Plans Drawing 609.00 for details of Type A Curb.

At the contractor's option, Grade 40 reinforcement may be substituted for the Grade 60 #5 dowel bars connecting the bridge approach slab to the bridge abutment. No additional payment will be made for this substitution.

When Grade 40 reinforcement is substituted for the Grade 60 #5 dowel bars connecting the bridge approach slab to the bridge abutment, the reinforcement may be bent up to 90 degrees with a 2" minimum radius near the abutment to allow compaction of the backfill material near the abutment. Damage to epoxy coating shall be repaired in accordance with Sec 710.

Drain pipe may be either 6" diameter corrugated metallic-coated pipe underdrain, 4" diameter corrugated polyvinyl chloride (PVC) drain pipe, or 4" diameter corrugated polyethylene (PE) drain pipe.

"THIS MEDIA SHOULD NOT BE CONSIDERED A CERTIFIED DOCUMENT."

| DATE PREPARED | |
|---|---|
| 1/17/2013 | |
| ROUTE | STATE |
| I-35 | MO |
| DISTRICT | SHEET NO. |
| BR | 15 |
| COUNTY | |
| JACKSON | |
| JOB NO. | |
| J4I2371 | |
| CONTRACT ID. | |
| PROJECT NO. | |
| BRIDGE NO. | |
| L07817 | |

| DATE | DESCRIPTION |
|---|---|
| | |

IF A SEAL IS PRESENT ON THIS SHEET IT HAS BEEN ELECTRONICALLY SEALED AND DATED.

MISSOURI HIGHWAYS AND TRANSPORTATION COMMISSION
105 WEST CAPITOL
JEFFERSON CITY, MO 65102
1-888-ASK-MODOT (1-888-275-6636)

Detailed Oct. 2012
Checked Dec. 2012

BRIDGE APPROACH SLAB @ END BENT NO. 1

Note: This drawing is not to scale. Follow dimensions.

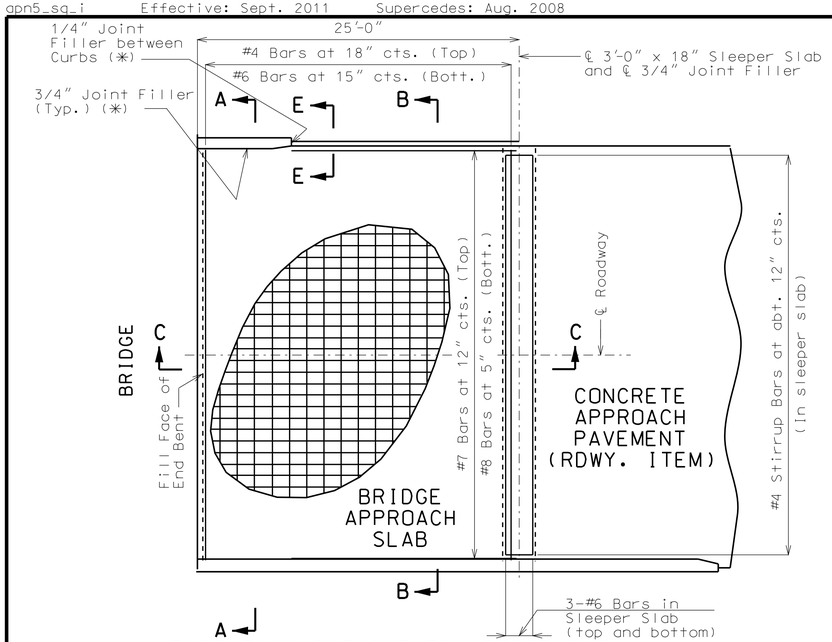


PART PLAN SHOWING REINFORCEMENT

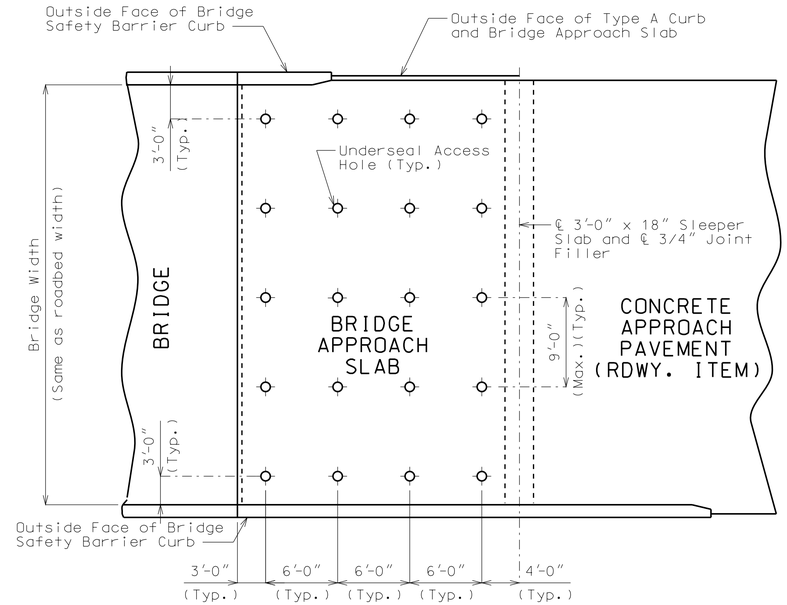


PART PLAN
(SHOWING TYPICAL UNDERSEAL ACCESS HOLE LOCATIONS)

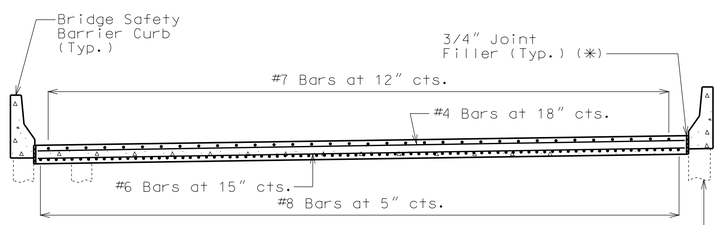


SECTION A-A

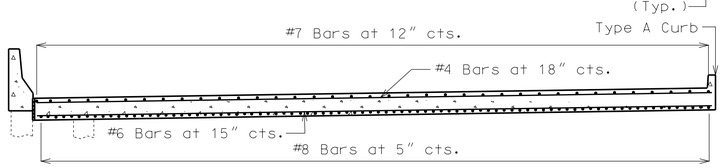


SECTION B-B

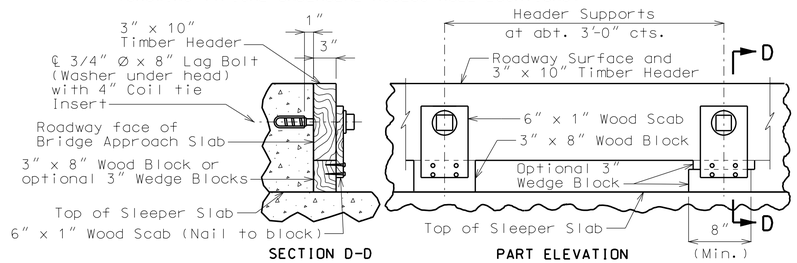


SECTION D-D PART ELEVATION

Note: Remove timber header when concrete pavement is placed.

DETAILS OF TIMBER HEADER

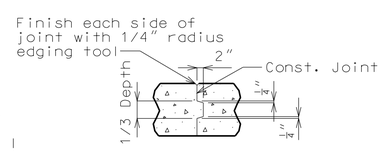


CONST. JOINT DETAIL
(IF REQUIRED)

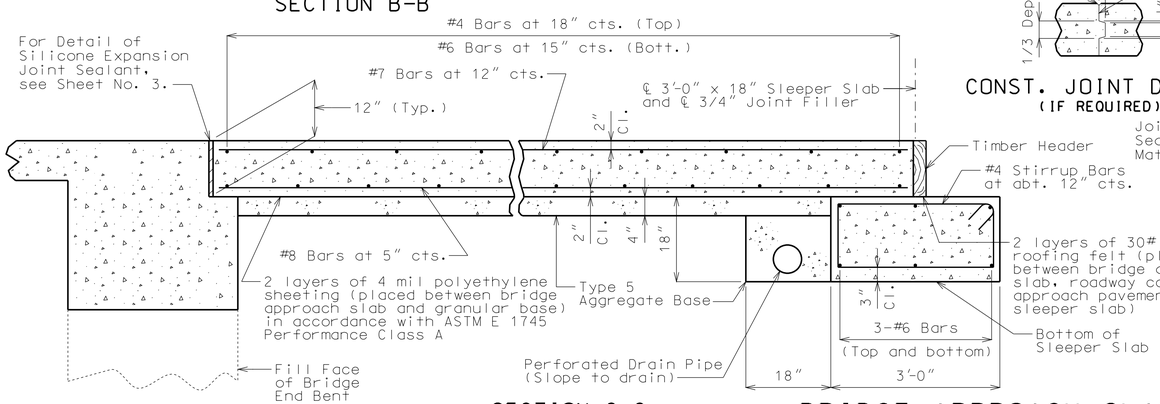


SECTION C-C

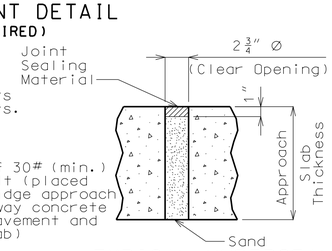


TYPICAL UNDERSEAL ACCESS HOLE DETAIL

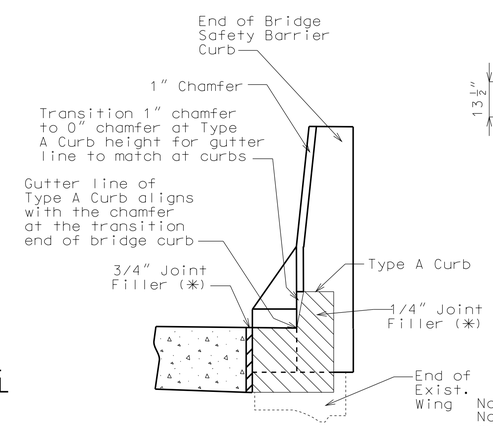


SECTION E-E
(BETWEEN LEFT CURBS)

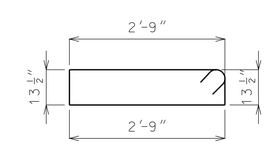


#4 STIRRUP BAR
(ACTUAL LENGTH = 8'-3")

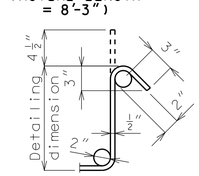


TYPICAL 135° STIRRUP HOOK DIMENSIONS BENDING DIAGRAM

Note: Nominal lengths are based on out to out dimensions shown in bending diagram and are listed for fabricators use (nearest inch).

## GENERAL NOTES:

All concrete for the bridge approach slab and sleeper slab shall be in accordance with Sec 503 (f'c = 4,000 psi).

All joint filler shall be in accordance with Sec 1057 for preformed fiber expansion joint filler, except as noted.

The reinforcing steel in the bridge approach slab and the sleeper slab shall be epoxy coated Grade 60 with Fy = 60,000 psi.

Minimum clearance to reinforcing steel shall be 1 1/2", unless otherwise shown.

The reinforcing steel in the bridge approach slab and the sleeper slab shall be continuous. The transverse reinforcing steel may be made continuous by lap splicing the #4 & #6 bars 18" and 2'-2", respectively.

Mechanical bar splices shall be in accordance with Sec 706.

(✱) Seal joint between vertical face of approach slab and exist. wing with "Silicone Joint Sealant for Saw Cut and Formed Joints" in accordance with Sec 717.

Hooks and bends shall be in accordance with the CRSI Manual of Standard Practice for Detailing Reinforced Concrete Structures, Stirrup and Tie Dimensions.

The contractor shall pour and satisfactorily finish the bridge or semi-deep slab before pouring the bridge approach slabs.

Longitudinal construction joints in approach slab and sleeper slab shall be aligned with longitudinal construction joints in bridge or semi-deep slab.

Payment for furnishing all materials, labor and excavation necessary to construct the approach slab, including the timber header, sleeper slab, underdrain, Type 5 aggregate base, joint filler and all other appurtenances and incidental work as shown on this sheet, complete in place, will be considered completely covered by the contract unit price for Bridge Approach Slab (Bridge) per square yard.

For Concrete Approach Pavement details, see roadway plans.

See Missouri Standard Plans Drawing 609.00 for details of Type A Curb.

At the contractor's option, Grade 40 reinforcement may be substituted for the Grade 60 #5 dowel bars connecting the bridge approach slab to the bridge abutment. No additional payment will be made for this substitution.

When Grade 40 reinforcement is substituted for the Grade 60 #5 dowel bars connecting the bridge approach slab to the bridge abutment, the reinforcement may be bent up to 90 degrees with a 2" minimum radius near the abutment to allow compaction of the backfill material near the abutment. Damage to epoxy coating shall be repaired in accordance with Sec 710.

Drain pipe may be either 6" diameter corrugated metallic-coated pipe underdrain, 4" diameter corrugated polyvinyl chloride (PVC) drain pipe, or 4" diameter corrugated polyethylene (PE) drain pipe.

"THIS MEDIA SHOULD NOT BE CONSIDERED A CERTIFIED DOCUMENT."

| DATE PREPARED | |
|---|---|
| 1/17/2013 | |
| ROUTE: I-35 | STATE: MO |
| DISTRICT: BR | SHEET NO.: 16 |
| COUNTY: JACKSON | |
| JOB NO.: J4I2371 | |
| CONTRACT ID. | |
| PROJECT NO. | |
| BRIDGE NO.: L07817 | |

| DATE | DESCRIPTION |
|---|---|
| | |

MISSOURI HIGHWAYS AND TRANSPORTATION COMMISSION
105 WEST CAPITOL
JEFFERSON CITY, MO 65102
1-888-ASK-MODOT (1-888-275-6636)

IF A SEAL IS PRESENT ON THIS SHEET IT HAS BEEN ELECTRONICALLY SEALED AND DATED.

Detailed Oct. 2012
Checked Dec. 2012

# BRIDGE APPROACH SLAB @ END BENT NO. 2

Note: This drawing is not to scale. Follow dimensions.

# BILL OF REINFORCING STEEL

| NO. REQ'D. | MARK NO. SIZE | MARK NO. MARK | LOCATION | EPOXY (E) | SHAPE NO. | STIRRUP (S) | SUBSTR. (X) | VARIES (V) | NO. EACH | B FT. | B IN. | C FT. | C IN. | D FT. | D IN. | E FT. | E IN. | F FT. | F IN. | H FT. | H IN. | K FT. | K IN. | NOMINAL LENGTH FT. | NOMINAL LENGTH IN. | ACTUAL LENGTH FT. | ACTUAL LENGTH IN. | WEIGHT LBS. |
|---|---|---|---|---|---|---|---|---|---|---|---|---|---|---|---|---|---|---|---|---|---|---|---|---|---|---|---|---|
| | | | END BENT 1 | | | | | | | | | | | | | | | | | | | | | | | | | |
| 5 | 6 | H10 | DIAPHRAGM | E | 20 | | | | | 34 | 8.000 | | | | | | | | | | | | | 34 | 8 | 34 | 8 | 260 |
| 5 | 6 | H11 | DIAPHRAGM | E | 20 | | | | | 28 | 5.000 | | | | | | | | | | | | | 28 | 5 | 28 | 5 | 213 |
| 10 | 6 | H12 | DIAPHRAGM | E | 11 | S | | | | | | 10.000 | | 2 | 9.000 | 4 | 0.000 | | | | | | | 7 | 7 | 7 | 3 | 109 |
| 5 | 6 | H13 | DIAPHRAGM | E | 20 | | | | | 34 | 2.000 | | | | | | | | | | | | | 34 | 2 | 34 | 2 | 257 |
| 5 | 6 | H14 | DIAPHRAGM | E | 20 | | | | | 27 | 11.000 | | | | | | | | | | | | | 27 | 11 | 27 | 11 | 210 |
| 56 | 5 | H15 | APP NOTCH | E | 20 | | | | | 2 | 6.000 | | | | | | | | | | | | | 2 | 6 | 2 | 6 | 146 |
| 5 | 6 | H16 | DIAPHRAGM | E | 20 | | | | | 30 | 9.000 | | | | | | | | | | | | | 30 | 9 | 30 | 9 | 231 |
| 5 | 6 | H17 | DIAPHRAGM | E | 20 | | | | | 30 | 8.000 | | | | | | | | | | | | | 30 | 8 | 30 | 8 | 230 |
| 53 | 6 | U10 | DIAPHRAGM | E | 19 | S | | | | 3 | 0.000 | 5 | 9.000 | | | | | | | | | | | 8 | 9 | 8 | 7 | 683 |
| 43 | 6 | U11 | DIAPHRAGM | E | 19 | S | | | | 4 | 2.000 | 3 | 6.000 | | | | | | | | | | | 7 | 8 | 7 | 6 | 484 |
| 8 | 6 | U12 | DIAPHRAGM | E | 19 | S | | | | 3 | 6.000 | 3 | 6.000 | | | | | | | | | | | 7 | 0 | 6 | 10 | 82 |
| 4 | 6 | U13 | DIAPHRAGM | E | 19 | S | | | | | 8.000 | 5 | 9.000 | | | | | | | | | | | 6 | 5 | 6 | 3 | 38 |
| 43 | 6 | U14 | DIAPHRAGM | E | 19 | S | | | | 3 | 10.000 | 4 | 0.000 | | | | | | | | | | | 7 | 10 | 7 | 8 | 495 |
| 4 | 6 | U15 | DIAPHRAGM | E | 19 | S | | | | 3 | 2.000 | 4 | 0.000 | | | | | | | | | | | 7 | 2 | 7 | 0 | 42 |
| | | | END BENT 2 | | | | | | | | | | | | | | | | | | | | | | | | | |
| 5 | 6 | H20 | DIAPHRAGM | E | 20 | | | | | 34 | 2.000 | | | | | | | | | | | | | 34 | 2 | 34 | 2 | 257 |
| 5 | 6 | H21 | DIAPHRAGM | E | 20 | | | | | 27 | 11.000 | | | | | | | | | | | | | 27 | 11 | 27 | 11 | 210 |
| 10 | 6 | H22 | DIAPHRAGM | E | 11 | S | | | | | | 10.000 | | 2 | 9.000 | 4 | 0.000 | | | | | | | 7 | 7 | 7 | 3 | 109 |
| 5 | 6 | H23 | DIAPHRAGM | E | 20 | | | | | 28 | 5.000 | | | | | | | | | | | | | 28 | 5 | 28 | 5 | 213 |
| 5 | 6 | H24 | DIAPHRAGM | E | 20 | | | | | 34 | 8.000 | | | | | | | | | | | | | 34 | 8 | 34 | 8 | 260 |
| 5 | 6 | H25 | DIAPHRAGM | E | 20 | | | | | 30 | 8.000 | | | | | | | | | | | | | 30 | 8 | 30 | 8 | 230 |
| 5 | 6 | H26 | DIAPHRAGM | E | 20 | | | | | 30 | 9.000 | | | | | | | | | | | | | 30 | 9 | 30 | 9 | 231 |
| 43 | 6 | U20 | DIAPHRAGM | E | 6 | S | | | | 2 | 8.000 | 4 | 0.000 | 4 | 6.000 | 3 | 5.000 | | | | | | | 14 | 7 | 14 | 1 | 910 |
| 4 | 6 | U21 | DIAPHRAGM | E | 6 | S | | | | 2 | 8.000 | 2 | 9.000 | 3 | 11.000 | 3 | 5.000 | | | | | | | 12 | 9 | 12 | 3 | 74 |
| 4 | 6 | U22 | DIAPHRAGM | E | 6 | S | | | | 2 | 8.000 | 4 | 0.000 | 3 | 11.000 | 3 | 5.000 | | | | | | | 14 | 0 | 13 | 6 | 81 |
| 53 | 6 | U23 | DIAPHRAGM | E | 19 | S | | | | 3 | 0.000 | 5 | 9.000 | | | | | | | | | | | 8 | 9 | 8 | 7 | 683 |
| 4 | 6 | U24 | DIAPHRAGM | E | 19 | S | | | | | 8.000 | 5 | 9.000 | | | | | | | | | | | 6 | 5 | 6 | 3 | 38 |
| 43 | 6 | U25 | DIAPHRAGM | E | 19 | S | | | | 4 | 1.000 | 4 | 0.000 | | | | | | | | | | | 8 | 1 | 7 | 11 | 511 |
| 4 | 6 | U26 | DIAPHRAGM | E | 19 | S | | | | 3 | 6.000 | 4 | 0.000 | | | | | | | | | | | 7 | 6 | 7 | 4 | 44 |
| 6 | 6 | V20 | DIAPHRAGM | E | 20 | | | | | 4 | 1.000 | | | | | | | | | | | | | 4 | 1 | 4 | 1 | 37 |
| 4 | 6 | V21 | DIAPHRAGM | E | 20 | | | | | 3 | 6.000 | | | | | | | | | | | | | 3 | 6 | 3 | 6 | 21 |
| | | | SLAB | | | | | | | | | | | | | | | | | | | | | | | | | |
| 96 | 5 | S1 | SLAB | E | 20 | | | | | 35 | 4.000 | | | | | | | | | | | | | 35 | 4 | 35 | 4 | 3538 |
| 4 | 6 | S2 | SLAB | E | 20 | | | V | 1 | 4 | 1.000 | | | | | | | | | | | | | 4 | 1 | 4 | 1 | |
| | | | INCREMENT = | | | | | | | 27 | 7.000 | | | | | | | | | | | | | 27 | 7 | 27 | 7 | 95 |
| | | | 94.000 INCH | | | | | | | | | | | | | | | | | | | | | | | | | |
| 3 | 6 | S3 | SLAB | E | 20 | | | V | 1 | 7 | 9.000 | | | | | | | | | | | | | 7 | 9 | 7 | 9 | |
| | | | INCREMENT = | | | | | | | 23 | 6.000 | | | | | | | | | | | | | 23 | 6 | 23 | 6 | 70 |
| | | | 94.500 INCH | | | | | | | | | | | | | | | | | | | | | | | | | |
| 3 | 6 | S4 | SLAB | E | 20 | | | V | 1 | 8 | 0.000 | | | | | | | | | | | | | 8 | 0 | 8 | 0 | |
| | | | INCREMENT = | | | | | | | 23 | 9.000 | | | | | | | | | | | | | 23 | 9 | 23 | 9 | 72 |
| | | | 94.500 INCH | | | | | | | | | | | | | | | | | | | | | | | | | |
| 4 | 6 | S5 | SLAB | E | 20 | | | V | 1 | 4 | 1.000 | | | | | | | | | | | | | 4 | 1 | 4 | 1 | |
| | | | INCREMENT = | | | | | | | 27 | 9.000 | | | | | | | | | | | | | 27 | 9 | 27 | 9 | 96 |
| | | | 94.625 INCH | | | | | | | | | | | | | | | | | | | | | | | | | |
| 131 | 6 | S6 | SLAB | E | 20 | | | | | 30 | 9.000 | | | | | | | | | | | | | 30 | 9 | 30 | 9 | 6050 |
| 133 | 6 | S7 | SLAB | E | 20 | | | | | 30 | 7.000 | | | | | | | | | | | | | 30 | 7 | 30 | 7 | 6110 |
| 4 | 5 | S8 | SLAB | E | 20 | | | V | 1 | 6 | 0.000 | | | | | | | | | | | | | 6 | 0 | 6 | 0 | |
| | | | INCREMENT = | | | | | | | 29 | 7.000 | | | | | | | | | | | | | 29 | 7 | 29 | 7 | 74 |
| | | | 94.375 INCH | | | | | | | | | | | | | | | | | | | | | | | | | |

# BILL OF REINFORCING STEEL

| NO. REQ'D. | MARK NO. SIZE | MARK NO. MARK | LOCATION | EPOXY (E) | SHAPE NO. | STIRRUP (S) | SUBSTR. (X) | VARIES (V) | NO. EACH | B FT. | B IN. | C FT. | C IN. | D FT. | D IN. | E FT. | E IN. | F FT. | F IN. | H FT. | H IN. | K FT. | K IN. | NOMINAL LENGTH FT. | NOMINAL LENGTH IN. | ACTUAL LENGTH FT. | ACTUAL LENGTH IN. | WEIGHT LBS. |
|---|---|---|---|---|---|---|---|---|---|---|---|---|---|---|---|---|---|---|---|---|---|---|---|---|---|---|---|---|
| 3 | 5 | S9 | SLAB | E | 20 | | | V | 1 | 9 | 8.000 | | | | | | | | | | | | | 9 | 8 | 9 | 8 | |
| | | | INCREMENT = | | | | | | | 25 | 5.000 | | | | | | | | | | | | | 25 | 5 | 25 | 5 | 55 |
| | | | 94.500 INCH | | | | | | | | | | | | | | | | | | | | | | | | | |
| 3 | 5 | S10 | SLAB | E | 20 | | | V | 1 | 9 | 10.000 | | | | | | | | | | | | | 9 | 10 | 9 | 10 | |
| | | | INCREMENT = | | | | | | | 25 | 7.000 | | | | | | | | | | | | | 25 | 7 | 25 | 7 | 55 |
| | | | 94.500 INCH | | | | | | | | | | | | | | | | | | | | | | | | | |
| 4 | 5 | S11 | SLAB | E | 20 | | | V | 1 | 6 | 0.000 | | | | | | | | | | | | | 6 | 0 | 6 | 0 | |
| | | | INCREMENT = | | | | | | | 29 | 7.000 | | | | | | | | | | | | | 29 | 7 | 29 | 7 | 74 |
| | | | 94.375 INCH | | | | | | | | | | | | | | | | | | | | | | | | | |
| 116 | 5 | S12 | SLAB | E | 20 | | | | | 30 | 7.000 | | | | | | | | | | | | | 30 | 7 | 30 | 7 | 3700 |
| 116 | 5 | S13 | SLAB | E | 20 | | | | | 30 | 9.000 | | | | | | | | | | | | | 30 | 9 | 30 | 9 | 3720 |
| 66 | 5 | S14 | SLAB | E | 20 | | | | | 60 | 0.000 | | | | | | | | | | | | | 60 | 0 | 60 | 0 | 4130 |
| | | | BARRIER CURB | | | | | | | | | | | | | | | | | | | | | | | | | |
| 156 | 5 | K1 | BARRIER CURB | E | 19 | S | | | | 3 | 1.000 | | 5.125 | | | | | | | | | | | 3 | 6 | 3 | 5 | 556 |
| 156 | 5 | K2 | BARRIER CURB | E | 14 | S | | | | | 5.125 | | 19.125 | | 18.000 | | | | | | 2.000 | | 17.875 | 3 | 6 | 3 | 5 | 556 |
| 56 | 5 | K9 | BARRIER CURB | E | 20 | | | | | 5 | 7.000 | | | | | | | | | | | | | 5 | 7 | 5 | 7 | 326 |
| 4 | 5 | K11 | BARRIER CURB | E | 8 | | | | | 2 | 2.125 | | | | | | | | | | 2 | 2.000 | 2.375 | 4 | 4 | 4 | 4 | 18 |
| 26 | 4 | K13 | BARRIER CURB | E | 20 | | | | | 29 | 11.000 | | | | | | | | | | | | | 29 | 11 | 29 | 11 | 520 |
| 24 | 4 | K14 | BARRIER CURB | E | 20 | | | | | 5 | 11.000 | | | | | | | | | | | | | 5 | 11 | 5 | 11 | 95 |
| 138 | 5 | R1 | BARRIER CURB | E | 26 | | | | | 2 | 6.000 | | 4.250 | 2 | 6.125 | | | | | | 2 | 6.000 | 3.000 | 5 | 2 | 5 | 2 | 744 |
| 138 | 5 | R3 | BARRIER CURB | E | 19 | S | | | | | 17.000 | | 6.000 | | | | | | | | | | | 0 | 23 | 0 | 22 | 264 |
| 138 | 5 | R4 | BARRIER CURB | E | 27 | S | | | | | | | 6.000 | | 11.250 | | 7.000 | | 12.000 | | 9.250 | | 6.375 | 3 | 0 | 2 | 10 | 408 |
| 30 | 5 | R5 | BARRIER CURB | E | 20 | | | | | 35 | 2.000 | | | | | | | | | | | | | 35 | 2 | 35 | 2 | 1100 |
| | | | SLIP FORM | | | | | | | | | | | | | | | | | | | | | | | | | |
| | | | OPTION | | | | | | | | | | | | | | | | | | | | | | | | | |
| 16 | 5 | C1 | SLIP FORM | E | 20 | | | | | 10 | 0.000 | | | | | | | | | | | | | 10 | 0 | 10 | 0 | 167 |
| 4 | 5 | C2 | SLIP FORM | E | 20 | | | | | 6 | 3.000 | | | | | | | | | | | | | 6 | 3 | 6 | 3 | 26 |
| | | | TOTALS | | | | | | | | | | | | | | | | | | | | | | | | | |
| | 4 | | | E | | | | | | | | | | | | | | | | | | | | | | | | 615 |
| | 5 | | | E | | | | | | | | | | | | | | | | | | | | | | | | 19657 |
| | 6 | | | E | | | | | | | | | | | | | | | | | | | | | | | | 19736 |
| | | | TOTAL | | | | | | | | | | | | | | | | | | | | | | | | | 0 |
| | | | TOTAL | E | | | | | | | | | | | | | | | | | | | | | | | | 40008 |
| | | | Slab on | | | | | | | | | | | | | | | | | | | | | | | | | |
| | | | Girder | | | | | | | | | | | | | | | | | | | | | | | | | |
| | 5 | | | E | | | | | | | | | | | | | | | | | | | | | | | | 15492 |
| | 6 | | | E | | | | | | | | | | | | | | | | | | | | | | | | 19736 |
| | | | TOTAL | | | | | | | | | | | | | | | | | | | | | | | | | 35228 |
| | | | Safety | | | | | | | | | | | | | | | | | | | | | | | | | |
| | | | Barrier | | | | | | | | | | | | | | | | | | | | | | | | | |
| | | | Curb | | | | | | | | | | | | | | | | | | | | | | | | | |
| | 4 | | | E | | | | | | | | | | | | | | | | | | | | | | | | 615 |
| | 5 | | | E | | | | | | | | | | | | | | | | | | | | | | | | 3972 |
| | | | TOTAL | | | | | | | | | | | | | | | | | | | | | | | | | 4587 |
| | | | Slip Form | | | | | | | | | | | | | | | | | | | | | | | | | |
| | | | Option | | | | | | | | | | | | | | | | | | | | | | | | | |
| | 5 | | | E | | | | | | | | | | | | | | | | | | | | | | | | 193 |
| | | | TOTAL | | | | | | | | | | | | | | | | | | | | | | | | | 193 |

TWO ADDITIONAL #4-K13, #5-R5 & #6-S7 ARE INCLUDED IN THE BAR BILL FOR TESTING.

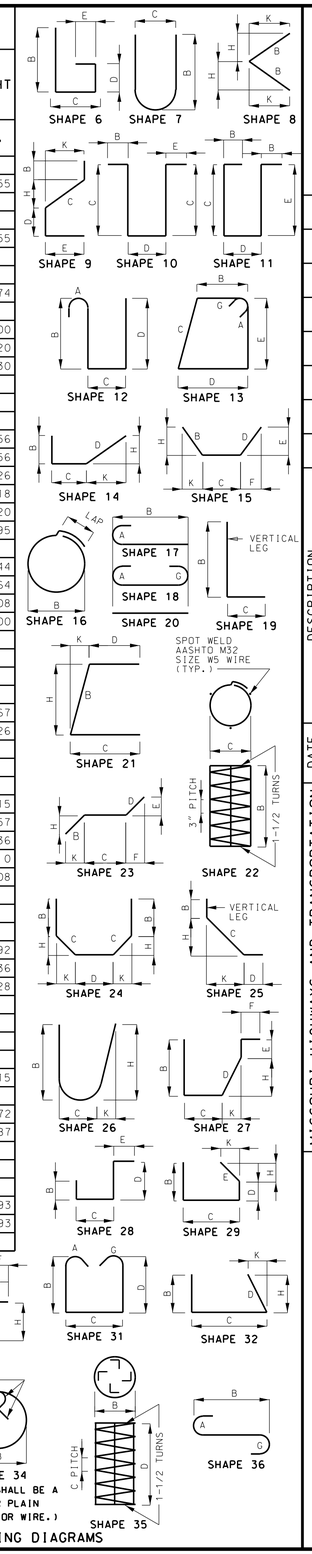


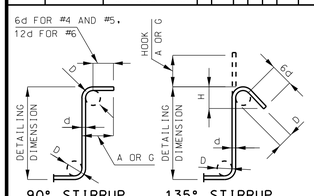


| STIRRUP HOOK DIMENSIONS | | | | |
|---|---|---|---|---|
| GRADES 40 - 50 - 60 KSI | | | | |
| BAR SIZE | D (IN.) | 90° HOOK: HOOK A OR G | 135° HOOK: HOOK A OR G | 135° HOOK: APPROX. H |
| #4 | 2" | 4 1/2" | 4 1/2" | 3" |
| #5 | 2 1/2" | 6" | 5 1/2" | 3 3/4" |
| #6 | 4 1/2" | 12" | 8" | 4 1/2" |

NOTE: UNLESS OTHERWISE NOTED DIAMETER "D" IS THE SAME FOR ALL BENDS AND HOOKS ON A BAR.

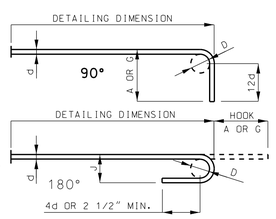


| END HOOK DIMENSIONS | | | | |
|---|---|---|---|---|
| BAR SIZE | D (IN.) | ALL GRADES: 180° HOOKS A OR G | ALL GRADES: 180° HOOKS J | ALL GRADES: 90° HOOKS A OR G |
| #3 | 2 1/4" | 5" | 3" | 6" |
| #4 | 3" | 6" | 4" | 8" |
| #5 | 3 3/4" | 7" | 5" | 10" |
| #6 | 4 1/2" | 8" | 6" | 12" |
| #7 | 5 1/4" | 10" | 7" | 14" |
| #8 | 6" | 11" | 8" | 16" |
| #9 | 9 1/2" | 15" | 11 3/4" | 19" |
| #10 | 10 3/4" | 17" | 13 1/4" | 22" |
| #11 | 12" | 19" | 14 3/4" | 2'-0" |
| #14 | 18 1/4" | 2'-3" | 21 3/4" | 2'-7" |

**NOTE:**
ALL STANDARD HOOKS AND BENDS OTHER THAN 180 DEGREE ARE TO BE BENT WITH SAME PROCEDURE AS FOR 90 DEGREE STANDARD HOOKS.
HOOKS AND BENDS SHALL BE IN ACCORDANCE WITH THE PROCEDURES AS SHOWN ON THIS SHEET.
E = EPOXY COATED REINFORCEMENT.
S = STIRRUP.
X = BAR IS INCLUDED IN SUBSTRUCTURE QUANTITIES.
V = BAR DIMENSIONS VARY IN EQUAL INCREMENTS BETWEEN DIMENSIONS SHOWN ON THIS LINE AND THE FOLLOWING LINE.
NO. EA. = NUMBER OF BARS OF EACH LENGTH.
NOMINAL LENGTHS ARE BASED ON OUT TO OUT DIMENSIONS SHOWN IN BENDING DIAGRAMS AND ARE LISTED FOR FABRICATORS USE. (NEAREST INCH)
ACTUAL LENGTHS ARE MEASURED ALONG CENTERLINE BAR TO THE NEAREST INCH.
PAYWEIGHTS ARE BASED ON ACTUAL LENGTHS.
FOUR ANGLE OR CHANNEL SPACERS ARE REQUIRED FOR EACH COLUMN SPIRAL. SPACERS ARE TO BE PLACED ON INSIDE OF SPIRALS. LENGTH AND WEIGHT OF COLUMN SPIRALS DO NOT INCLUDE SPLICES OR SPACERS.
REINFORCING STEEL (GRADE 60) FY = 60,000 PSI.

"THIS MEDIA SHOULD NOT BE CONSIDERED A CERTIFIED DOCUMENT."

| | |
|---|---|
| DATE PREPARED | 1/17/2013 |
| ROUTE | I-35 |
| STATE | MO |
| DISTRICT | BR |
| SHEET NO. | 17 |
| COUNTY | JACKSON |
| JOB NO. | J4I2371 |
| CONTRACT ID. | |
| PROJECT NO. | |
| BRIDGE NO. | L07817 |

DESCRIPTION

DATE

IF A SEAL IS PRESENT ON THIS SHEET IT HAS BEEN ELECTRONICALLY SEALED AND DATED.

MISSOURI HIGHWAYS AND TRANSPORTATION COMMISSION
105 WEST CAPITOL
JEFFERSON CITY, MO 65102
1-888-ASK-MODOT (1-888-275-6636)

Detailed Dec. 2012
Checked Jan. 2013

Note: This drawing is not to scale. Follow dimensions.