MISSOURI HIGHWAY AND TRANSPORTATION COMMISSION

STATE	PROJ. NO.	SHEET NO.
MO.		7
SEC./SUR. 22	TWP. 48 RGE. 33	

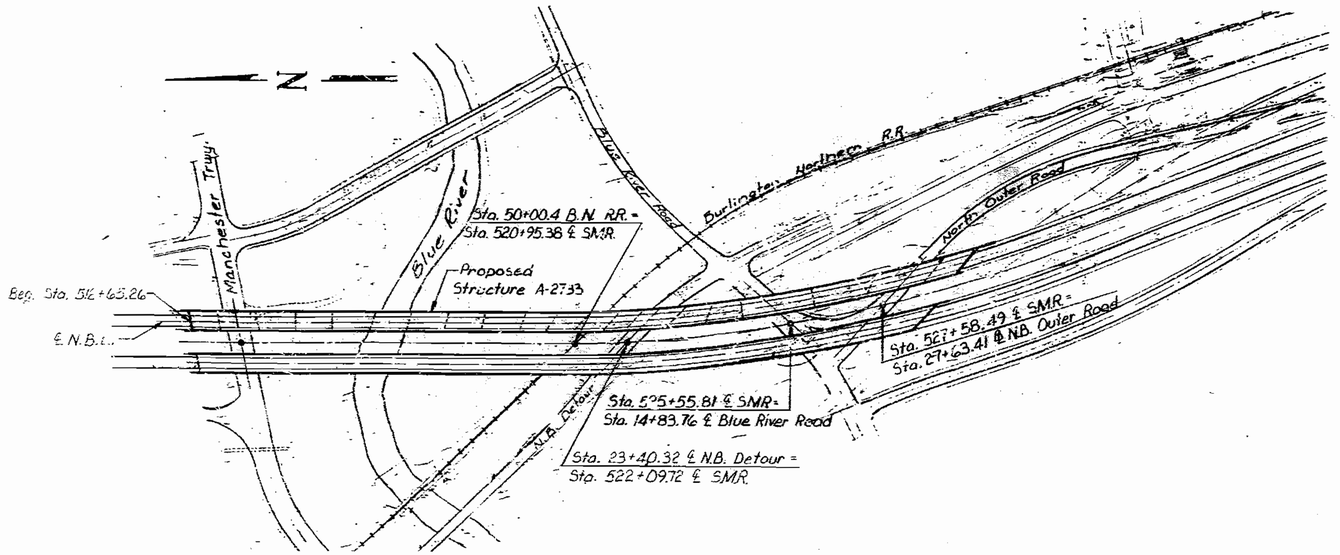

LOCATION SKETCH

BRIDGE NO. A-2733
OVER
MANCHESTER TRAFFICWAY, BLUE RIVER,
BURLINGTON NORTHERN RR,
N.B. DETOUR, BLUE RIVER ROAD
& NORTH OUTER ROAD

SUBSTRUCTURE CONTRACT

INDEX OF DRAWINGS

1	INDEX OF DRAWINGS	26	INT. BENT NO. 12
2	PART PLAN & ELEVATION	27	INT. BENT NO. 12
3	PART PLAN & ELEVATION	28	INT. BENT NO. 13
4	PART PLAN & ELEVATION	29	INT. BENT NO. 13
5	PART PLAN & ELEVATION	30	INT. BENT NO. 14
6	QUANTITIES, GEN. NOTES, PILE DATA & BORINGS	31	INT. BENT NO. 15
7	BORINGS	32	INT. BENT NO. 16
8	BORINGS	33	INT. BENT NO. 17
9	BORINGS	34	INT. BENT NO. 17
10	SUBSTRUCTURE LAYOUT	35	INT. BENT NO. 18
11	SUBSTRUCTURE LAYOUT	36	INT. BENT NO. 19
12	END BENT NO. 1	37	INT. BENT NO. 20
13	DEADMAN ANCHORAGE SYSTEM	38	END BENT NO. 21
14	INT. BENT NO. 2	39	END BENT NO. 21
15	INT. BENT NO. 3	40	END BENT NO. 21
16	INT. BENT NO. 4	41	DEADMAN ANCHORAGE SYSTEM
17	INT. BENT NO. 5	42	BEARING ALIGNMENT & EARTHQUAKE RESTRAINERS
18	INT. BENT NO. 6 & 7	43	BAR LIST
19	INT. BENT NO. 6 & 7	44	BAR LIST
20	INT. BENT NO. 8	45	BAR LIST
21	INT. BENT NO. 8	46	BAR LIST
22	INT. BENT NO. 9	47	BAR LIST
23	INT. BENT NO. 10	48	BAR LIST
24	INT. BENT NO. 9 & 10	49	BAR LIST
25	INT. BENT NO. 11		

B.M. TBM 2 Elev. 788.96 "+" on NE top flange bolt on fire hydrant at NW cor. Blue River Rd. and S.B. Hickman Mills Dr.

BRIDGE (SEE ABOVE)

STATE ROAD SOUTH MIDTOWN ROADWAY

IN KANAS CITY

PROJECT NO. DE-0031(803) STA. 512 + 65.26 (N.B.L.)

JOB NO. 4-U-71-2D RTE. 71 (NBL)

JACKSON COUNTY

DATE 9/14/88

STD. 611.60	
STD. 706.35	
A-2733	

DESIGNED FEB 1988
DETAILED AUG 1988
CHECKED AUG 1988

Note: This drawing is not to scale. Follow dimensions.

SEE FINAL PLANS

Sheet No. 1 of 49.

STATE	PROJ. NO	SHEET NO.
MO.		8

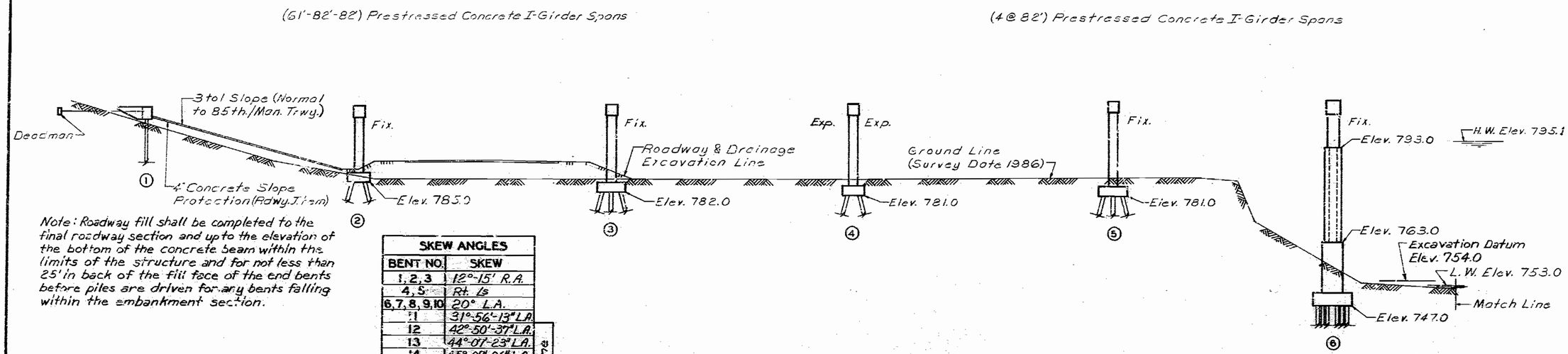

Note: Roadway fill shall be completed to the final roadway section and up to the elevation of the bottom of the concrete beam within the limits of the structure and for not less than 25' in back of the fill face of the end bents before piles are driven for any bents falling within the embankment section.

SKEW ANGLES	
BENT NO.	SKEW
1, 2, 3	12°-15' R.A.
4, 5	Rt. ∠s
6, 7, 8, 9, 10	20° L.A.
11	31°-56'-13" L.A.
12	42°-50'-37" L.A.
13	44°-07'-23" L.A.
14	45°-07'-06" L.A.
15	46°-54'-21" L.A.
16	28°-11'-36" L.A.
17, 18	Radial
19	36°-11'-18" L.A.
20	55°-24'-52" L.A.
21	56°-30'-09" L.A.

To Radial Line

Note: Skew angles are measured at ℄ N.B.L.

PART GENERAL ELEVATION

Note: A minimum Lateral Clearance of 2'-0" from Pavement edge shall be maintained during construction.
A minimum Lateral Clearance of 12'-0" from the centerline of track to nearst temporary construction false work shall be maintained during construction.

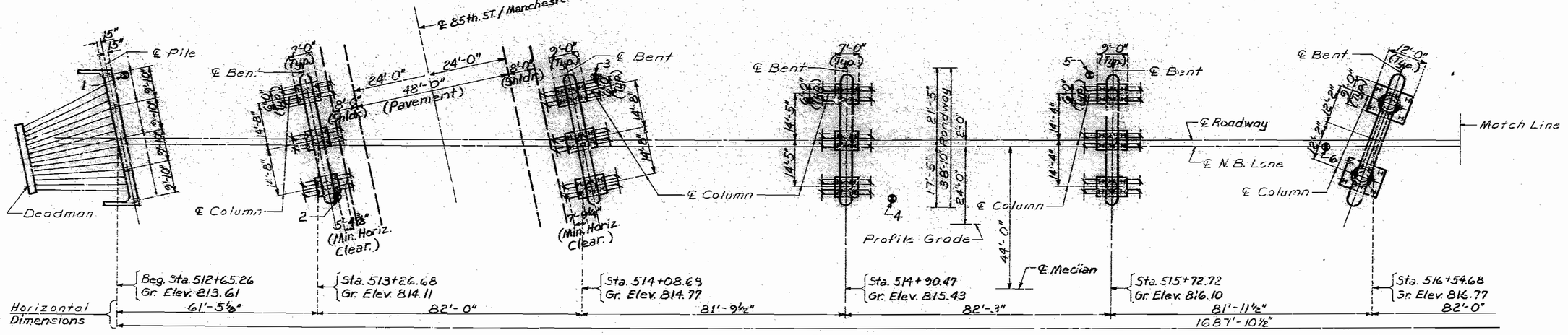

PART PLAN

Note: For boring data see Sheets No. 6, 7, 8 & 9.
"⊗" Indicates location of boring.
For General Notes, Estimated Quantites and Pile Data, see Sheet No. 6.
Stations shown are along ℄ Median.
Grade Elevations shown are along ℄ N.B. Lane.

DETAILED AUG. 1988
CHECKED AUG. 1988

Note: This drawing is not to scale. Follow dimensions.

Sheet No. 2 of 49.

JACKSON COUNTY

A-2733

449 254

FOR INFORMATION ONLY

STATE	PROJ. NO	SHEET NO.
MO.		9

(82'-82'-63'-63'-63') Prestressed Concrete I-Girder Spans

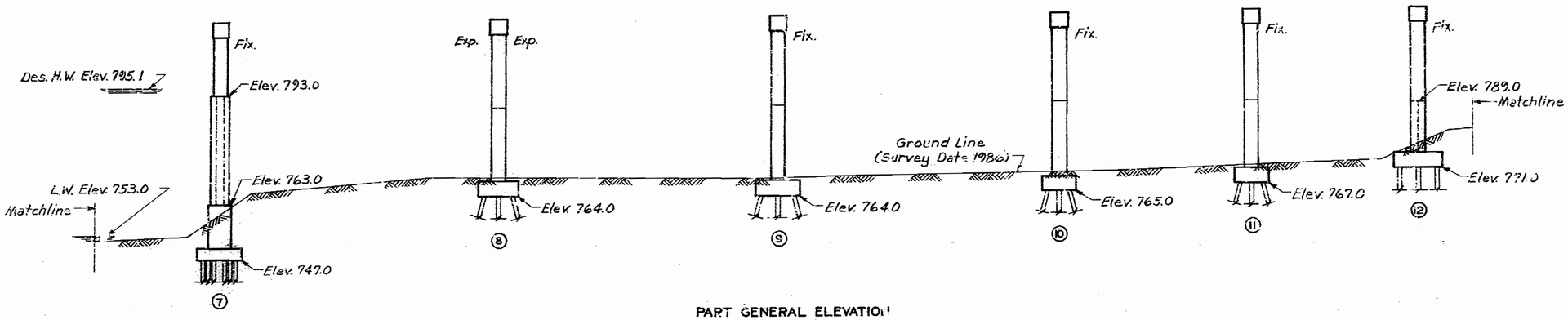

PART GENERAL ELEVATION

S.M.R. CURVE DATA

P.I. Sta.	= 526+15.81
Δ	= 22°-06'-46"
D	= 2°-00'-00"
R	= 2864.79'
L	= 1105.64'
T	= 559.79'
E	= 54.18'
S.E.	= Varies

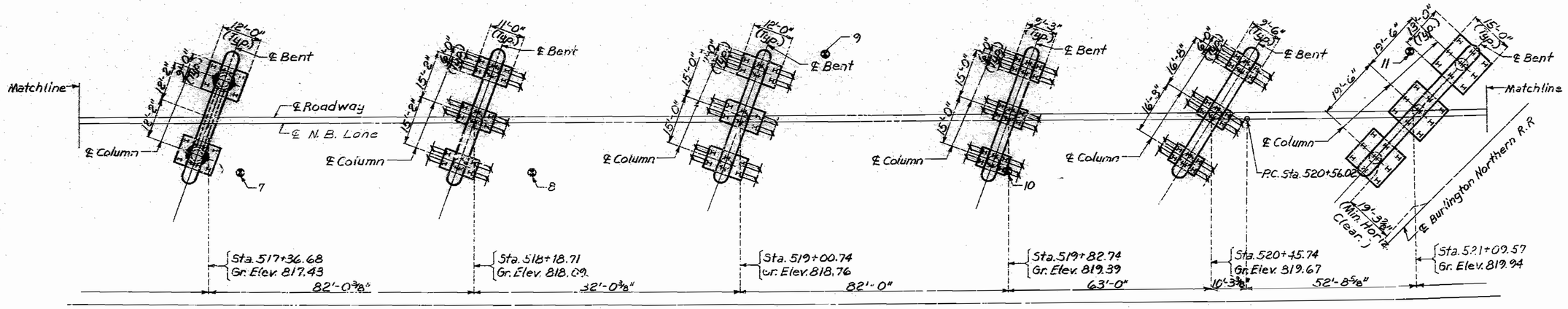

PART PLAN

DETAILED AUG. 1988
CHECKED AUG. 1988

Note: This drawing is not to scale. Follow dimensions.

JACKSON COUNTY

A-2733

STATE	FROJ. NO.	SHEET NO.
MO.		10

(43'-88'-71'-71') Prestressed Concrete I-Girder Spans

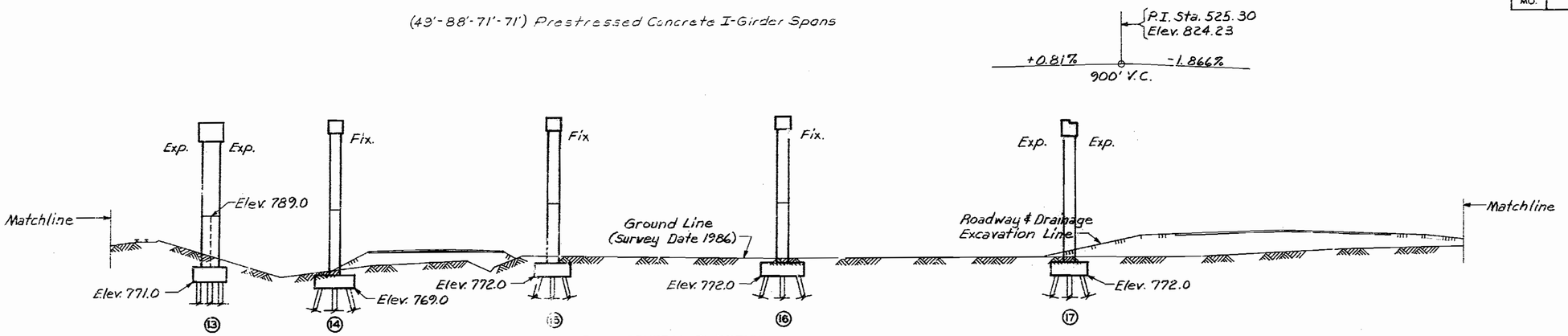

PART GENERAL ELEVATION

N.B. DETOUR CURVE DATA

P.I. Sta. = 21+33.94
Δ = 25°-23'-41"
D = 6°-00'-00"
R = 954.93'
L = 423.25'
T = 215.16'
E = 23.94'

BLUE RIVER RD. CURVE DATA

P.I. Sta. = 14+16.04
Δ = 23°-30'-42"
D = 7°-00'-00"
R = 818.51'
L = 335.88'
T = 170.34'
E = 17.54'

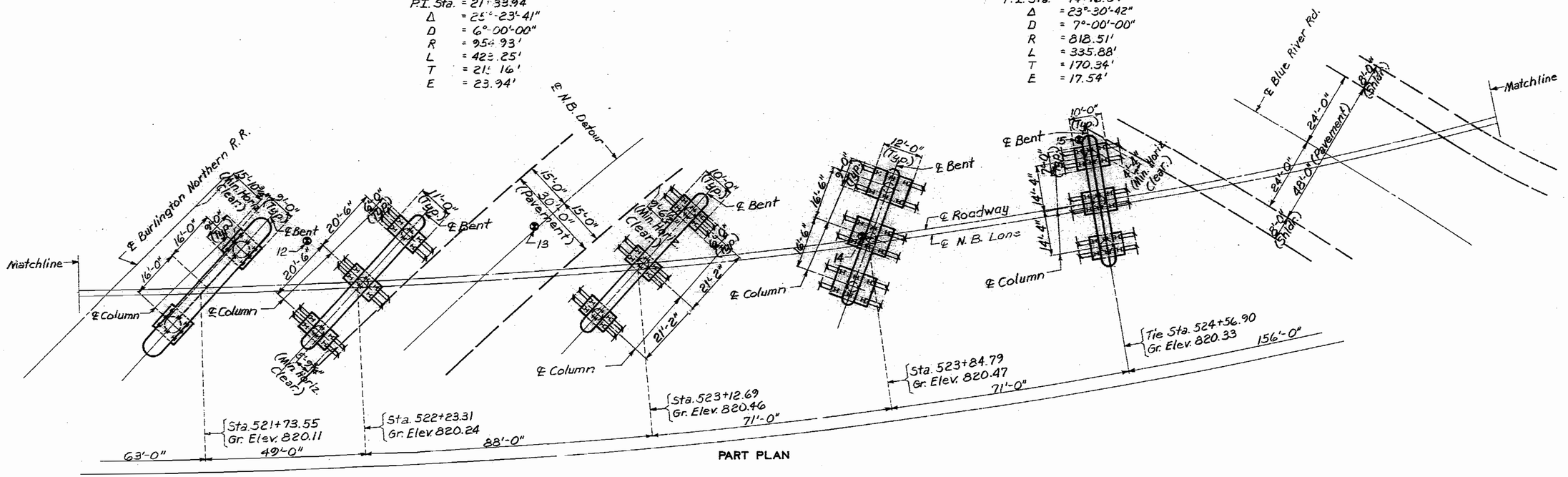

PART PLAN

DETAILED AUG. 1988
CHECKED AUG. 1988

Note: This drawing is not to scale. Follow dimensions.

JACKSON COUNTY

A-2733

STATE	PROJ. NO.	SHEET NO.
MO.		//

(156'-135'-135'-72') Continuous Composite Plate Girder Spans

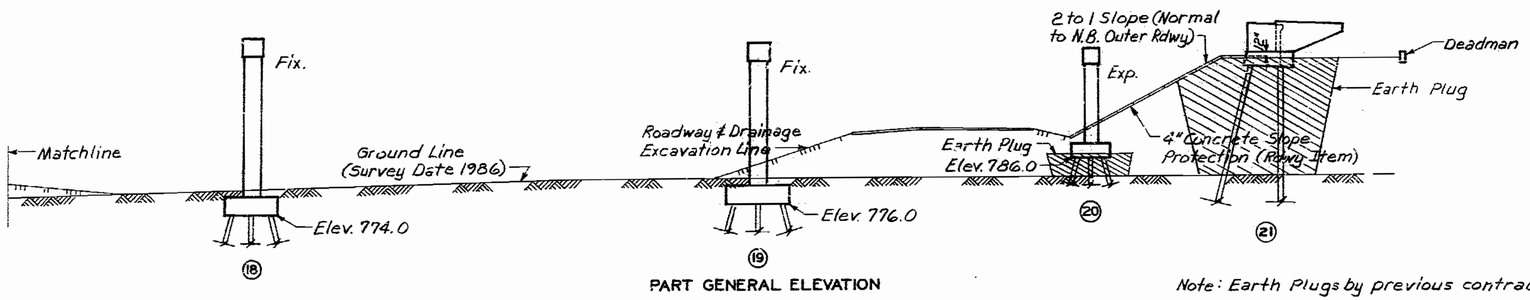

PART GENERAL ELEVATION

Note: Earth Plugs by previous contract.

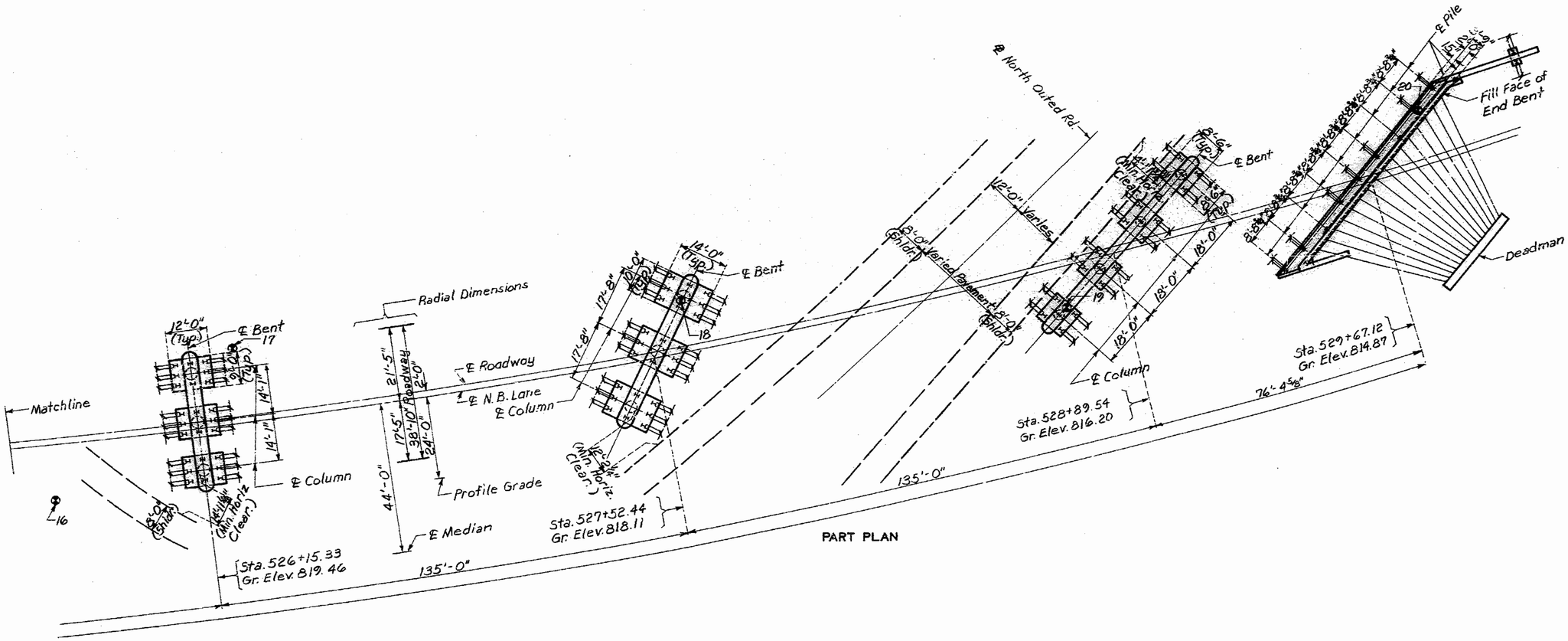

PART PLAN

SEE FINAL PLANS

157 357

DETAILED AUG. 1988
CHECKED AUG. 1988

Note: This drawing is not to scale. Follow dimensions.

Sheet No. 5 of 49.

JACKSON COUNTY

A-2733

STATE	PROJ. NO.	SHEET NO.
MO.		12

GENERAL NOTES:

DESIGN SPECIFICATIONS: A.A.S.H.T.O. - 1983 AND INTERIMS THRU 1987
LOAD FACTOR DESIGN

DESIGN LOADING:
HS20-44 MODIFIED 24,000# TANDEM AXLE
35#/SQ. FT. FUTURE WEARING SURFACE
EARTH 120#/CU. FT., EQUIVALENT FLUID PRESSURE 49#/CU. FT.(BT. #1) 29#/CU. FT.(BT. #21)
FATIGUE STRESS (PLATE GIRDERS)-CASE II
SUPERSTRUCTURE (PRESTRESSED GIRDERS) SIMPLY SUPPORTED, NON-COMPOSITE FOR DEAD LOAD.
CONTINUOUS COMPOSITE FOR LIVE LOAD.

DESIGN UNIT STESSES:
CLASS B CONCRETE (SUBSTRUCTURE) F'C = 3,000 PSI.
REINFORCING STEEL (GRADE 60) FY = 60,000PSI.
STEEL PILE FB = 9,000 PSI.

REINFORCING STEEL:
MINIMUM CLEARANCE TO REINFORCING STEEL SHALL BE 1 1/2", UNLESS OTHERWISE SHOWN.
ALL REINFORCING BARS IN TOP OF SUBSTRUCTURE BEAMS OR CAPS SHALL BE SPACED TO CLEAR ANCHOR BOLTS FOR BEARINGS BY AT LEAST 1/2".

ESTIMATED QUANTITIES

ITEM		TOTAL
CLASS 1 EXCAVATION	CU. YD.	1385
CLASS 2 EXCAVATION	CU. YD.	186
STRUCTURAL STEEL PILES (10 IN.)	LIN. FT.	7656
STRUCTURAL STEEL PILES (12 IN.)	LIN. FT.	5926
PRE-BORE FOR PILING	LIN. FT.	480
CLASS B CONCRETE	CU. YD.	2213.4
DEADMAN ANCHORAGE ASSEMBLY	EACH	2
REINFORCING STEEL	LB.	302,220
REINFORCING STEEL (EPOXY COATED)	LB.	3550

302,280 ⚠

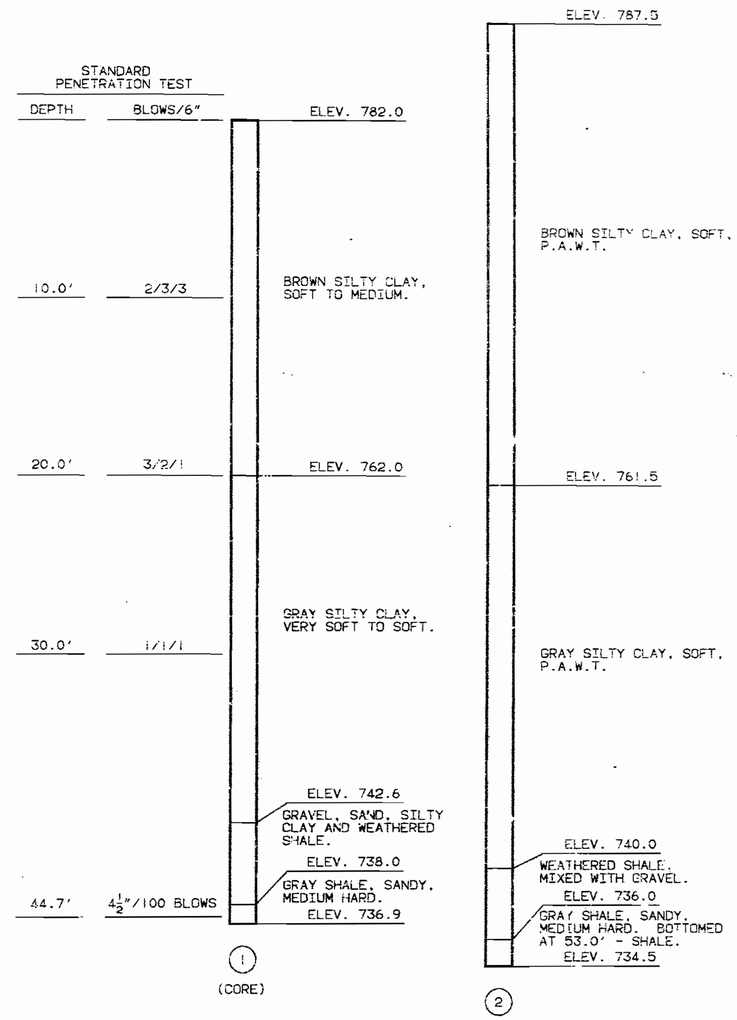

BORING DATA

PILE DATA																							
BENT NO.	1	2	3	4	5	6	7	8	9	10	11	12	13	14	15	16	17	18	19	20	21 BEAM	21 WING
PILE TYPE AND SIZE	HP12X53	HP12X53	HP10X42	HP12X53	HP10X42	HP12X53	HP12X53	HP10X42	HP10X42	HP10X42	HP10X42	HP10X42	HP12X53	HP10X42	HP12X53	HP10X42	HP10X42	HP12X53	HP10X42	HP12X53	HP12X53	HP10X42
NUMBER	5	12	18	12	18	20	20	18	18	18	18	24	16	18	18	18	18	24	24	20	11	2
APPROXIMATE LENGTH FT.	68	51	47	46	46	11	11	28	28	28	31	35	35	32	40	40	37	38	40	51	70	75
DESIGN BEARING TONS	62	59	46	62	47	68	68	53	54	52	49	51	62	54	58	50	55	60	53	57	61	8
HAMMER ENERGY REQ'D FT. LBS	13,800	13,900	10,800	14,600	11,000	15,200	15,200	12,400	12,600	12,200	11,500	11,300	13,800	12,600	13,600	11,700	13,000	14,800	12,400	13,400	16,300	11,900

MINIMUM ENERGY REQUIREMENT OF HAMMER IS BASED ON PLAN LENGTH AND DESIGN BEARING VALUE OF PILES.
ALL PILES SHALL BE DRIVEN TO PRACTICAL REFUSAL.
PREBORE FOR PILES AT BENTS NO. 1, 20 AND 21 TO ELEVATIONS 786.0, 781.0 AND 782.0, RESPECTIVELY.

53-258

DETAILED AUG. 1988
CHECKED AUG. 1988

NOTE: THIS DRAWING IS NOT TO SCALE. FOLLOW DIMENSIONS.

SHEET NO. 6 OF 49

⚠ Revised 5/3/89

JACKSON COUNTY

A-2733

STATE	PROJ. NO.	SHEET NO.
MO.		13

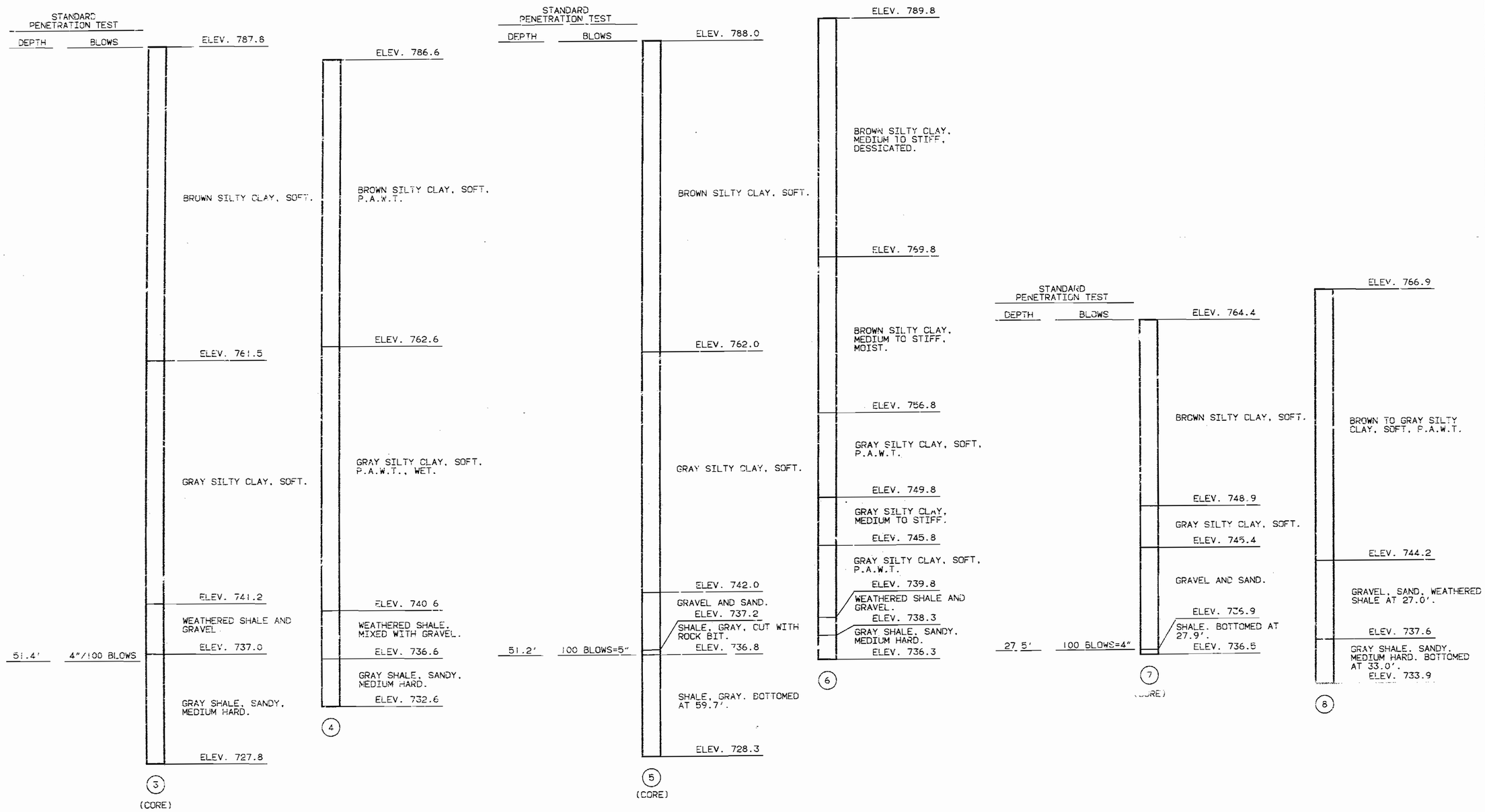

BORING DATA

DETAILED AUG. 1988
CHECKED AUG. 1988

NOTE: THIS DRAWING IS NOT TO SCALE. FOLLOW DIMENSIONS.

SHEET NO. 7 OF 49

JACKSON COUNTY

A-2733

STATE	PROJ. NO.	SHEET NO.
MO.		14

STANDARD PENETRATION TEST

DEPTH | BLOWS

ELEV. 767.1

BROWN SILTY CLAY, VERY SOFT TO SOFT.

ELEV. 745.7

COARSE GRAVEL, SAND AND WEATHERED SHALE.

29.8' | 4½"/100 BLOWS

ELEV. 738.0

GRAY SHALE, SANDY, MEDIUM HARD.

ELEV. 730.1

(9)

(CORE)

ELEV. 767.0

BROWN SILTY CLAY, SOFT, P.A.W.T.

ELEV. 745.0

GRAVEL, SAND.

ELEV. 738.0

GRAY SHALE, SANDY, MEDIUM HARD. BOTTOMED AT 33.5'-SHALE.

ELEV. 733.5

(10)

STANDARD PENETRATION TEST

DEPTH | BLOWS

ELEV. 769.0

BROWN SILTY CLAY, SOFT.

ELEV. 747.0

GRAY SILTY CLAY, SOFT.

ELEV. 740.5

GRAVEL.

ELEV. 737.6

31.4' | 100 BLOWS=6"

SHALE, GRAY. BOTTOMED AT 32.9'.

ELEV. 736.1

(11)

(CORE)

ELEV. 777.1

BROWN SILTY CLAY, SOFT, P.A.W.T. (RAILROAD FILL).

ELEV. 767.6

GRAVEL AND BOULDERS (RAILROAD FILL).

ELEV. 765.6

BROWN SILTY CLAY, SOFT, P.A.W.T.

ELEV. 754.1

GRAY SILTY CLAY, SOFT, WET P.A.W.T.

ELEV. 742.8

BROWN TO GRAY SILTY CLAY, STIFF (SOME GRAVEL).

ELEV. 740.1

GRAVEL, SAND AND WEATHERED SHALE.

ELEV. 737.1

GRAY SHALE, SANDY, MEDIUM HARD. BOTTOMED AT 43.5'-SHALE.

ELEV. 733.6

(12)

STANDARD PENETRATION TEST

DEPTH | BLOWS

ELEV. 776.9

BROWN SILTY CLAY, SOFT.

ELEV. 749.9

GRAY SILTY CLAY, VERY SOFT TO SOFT.

ELEV. 743.9

GRAVEL, SAND AND WEATHERED SHALE.

ELEV. 737.9

GRAY SHALE, SANDY, MEDIUM HARD.

ELEV. 736.7

40.0' | 2"/100 BLOWS

(13)

(CORE)

ELEV. 776.5

PAVEMENT.

ELEV. 775.5

BROWN SILTY CLAY, SOFT, P.A.W.T.

ELEV. 752.5

GRAY SILTY CLAY, SOFT, P.A.W.T., WET.

ELEV. 737.1

GRAVEL, SAND AND WEATHERED SHALE.

ELEV. 733.5

GRAY SHALE, SANDY, MEDIUM HARD.

ELEV. 729.5

(14)

BORING DATA

DETAILED AUG. 1988
CHECKED AUG. 1988

NOTE: THIS DRAWING IS NOT TO SCALE. FOLLOW DIMENSIONS.

SHEET NO. 8 OF 49

JACKSON COUNTY

A-2733

STATE	PROJ. NO.	SHEET NO.
MO.		15

ELEV. 776.5

BROWN SILTY CLAY, SOFT, P.A.W.T. FROM 3.0' ON.

ELEV. 753.5

GRAY SILTY CLAY, SOFT, WET, P.A.W.T.

ELEV. 745.9

GRAY SILTY CLAY, STIFF, WET.

ELEV. 741.5

GRAVEL, FAIRLY HEAVY.

ELEV. 738.5

GRAVEL MIXED WITH SHALE.

ELEV. 736.4

GRAY SHALE, MEDIUM HARD. BOTTOMED AT 43.3'-SHALE.

ELEV. 733.2

(15)

ELEV. 779.3

BROWN SILTY CLAY, MEDIUM (FILL TOP 3.0').

ELEV. 771.3

BROWN SILTY CLAY, SOFT, P.A.W.T.

ELEV. 756.3

GRAY SILTY CLAY, SOFT, WET, P.A.W.T.

ELEV. 742.8

GRAVEL, FAIRLY HEAVY.

ELEV. 737.3

GRAY SHALE, MEDIUM HARD (GRAVEL IN TOP 1' OF SHALE), BOTTOMED AT 43.5'-SHALE.

ELEV. 735.8

(16)

STANDARD PENETRATION TEST

DEPTH	BLOWS/6"
5.0'	2/3/4
10.0	1/2/3
15.0'	1/2/2
20.0'	3/2/4
25.0'	2/3/3
30.0'	1/2/2
40.6'	100/7½"

ELEV. 778.2

BROWN SILTY CLAY, SOFT.

ELEV. 767.2

BROWN SILTY CLAY, VERY SOFT.

ELEV. 751.8

GRAY SILTY CLAY, VERY SOFT TO SOFT.

ELEV. 746.2

GRAVEL, SAND AND WEATHERED SHALE. (HEAVY AT 34.0', WATER LOSS AT 37.0')

ELEV. 737.6

GRAY SHALE, SANDY.

ELEV. 736.9

(17)

(CORE)

STANDARD PENETRATION TEST

DEPTH	BLOWS/6"
5.0'	2/3/3
10.0'	4/4/6
15.0'	2/3/2
20.0'	7/2/2
25.0'	2/3/3
30.0'	2/2/2
35.0'	2/3/5
40.0'	5/10/14
44.5'	34/100 IN 4"
49.5'	65/5"/27
54.5'	100 IN 5'

ELEV. 781.14

CONCRETE SLAB. ELEV. 780.84

TAN BROWN, SILTY CLAY-MEDIUM TO STIFF WITH LIMONITE STAINS.

ELEV. 768.14

GRAY TO TAN, SILTY CLAY WITH CLAYEY SILT LAYERS-CONTAINS LIMONITE STAINS-SOFT TO MEDIUM STIFF.

ELEV. 753.64

GRAY, CLAYEY, SLIGHTLY SANDY SILT-SOFT-CONTAINS SCATTERED GRAVEL PIECES AT 36.0'.

ELEV. 744.64

MIXTURES OF FINE GRAVEL, SAND AND GRAY, CLAYEY SILT.

ELEV. 736.64

GRAY FIRM TO VERY FIRM, SLIGHTLY SILTY, SOMEWHAT MICACEOUS SHALE.

ELEV. 730.64

GRAY, FIRM, VERY SILTY, MICACEOUS SHALE.

ELEV. 729.64

GRAY, SILTY, SANDY, VERY FIRM SHALE.

ELEV. 726.64

BOTTOM IN SHALE.

(18)

(CORE)

ELEV. 782.87

BROWN, SOFT, SILTY CLAY-P.A.W.T. WITH EASE.

ELEV. 757.87

TAN BROWN TO GRAY, SOFT, CLAYEY SILT.

ELEV. 742.57

SAND WITH GRAVEL LAYERS

ELEV. 736.37

VERY FIRM SHALE.

ELEV. 723.87

BOTTOM IN SHALE.

(19)

ELEV. 782.43

TAN BROWN, SOFT, SILTY CLAY-P.A.W.T. WITH EASE.

ELEV. 772.63

TAN BROWN, STIFF TO VERY STIFF SILTY CLAY-COULD NOT P.A.W.T.

ELEV. 764.63

TAN BROWN, SOFT, SILTY CLAY TO GRAY, SOFT, CLAYEY SILT-P.A.W.T. WITH EASE.

ELEV. 747.33

POSSIBLE STIFF SILT OR SAND-COULD NOT P.A.W.T.(NO RECOVERY).

ELEV. 741.23

GRAVEL AND SAND.

ELEV. 736.63

SHALE, FIRM.

ELEV. 731.13

BOTTOM IN SHALE.

(20)

BORING DATA

156-261

DETAILED AUG. 1988
CHECKED AUG. 1988

NOTE: THIS DRAWING IS NOT TO SCALE. FOLLOW DIMENSIONS.

SHEET NO. 9 OF 09

JACKSON COUNTY

A-2733

STATE	PROJ. NO.	SHEET NO.
MO.		16

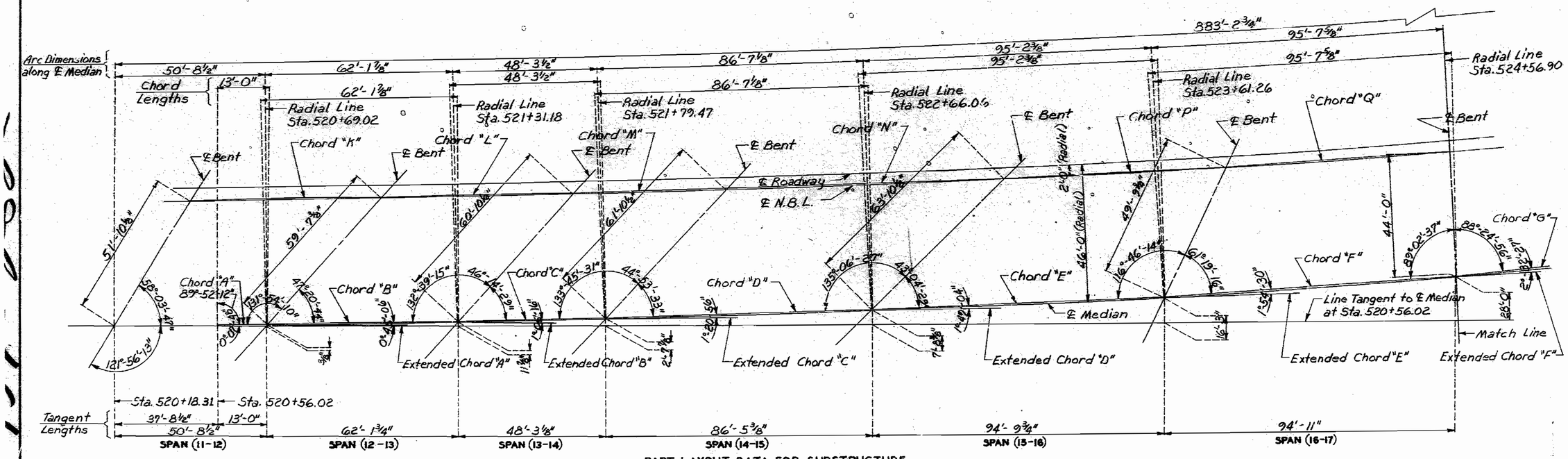

PART LAYOUT DATA FOR SUBSTRUCTURE

Note: All dimensions are horizontal.

DETAILED MAY 1988
CHECKED Aug 1988

Note: This drawing is not to scale. Follow dimensions.

STATE	PROJ. NO.	SHEET NO.
MO.		17

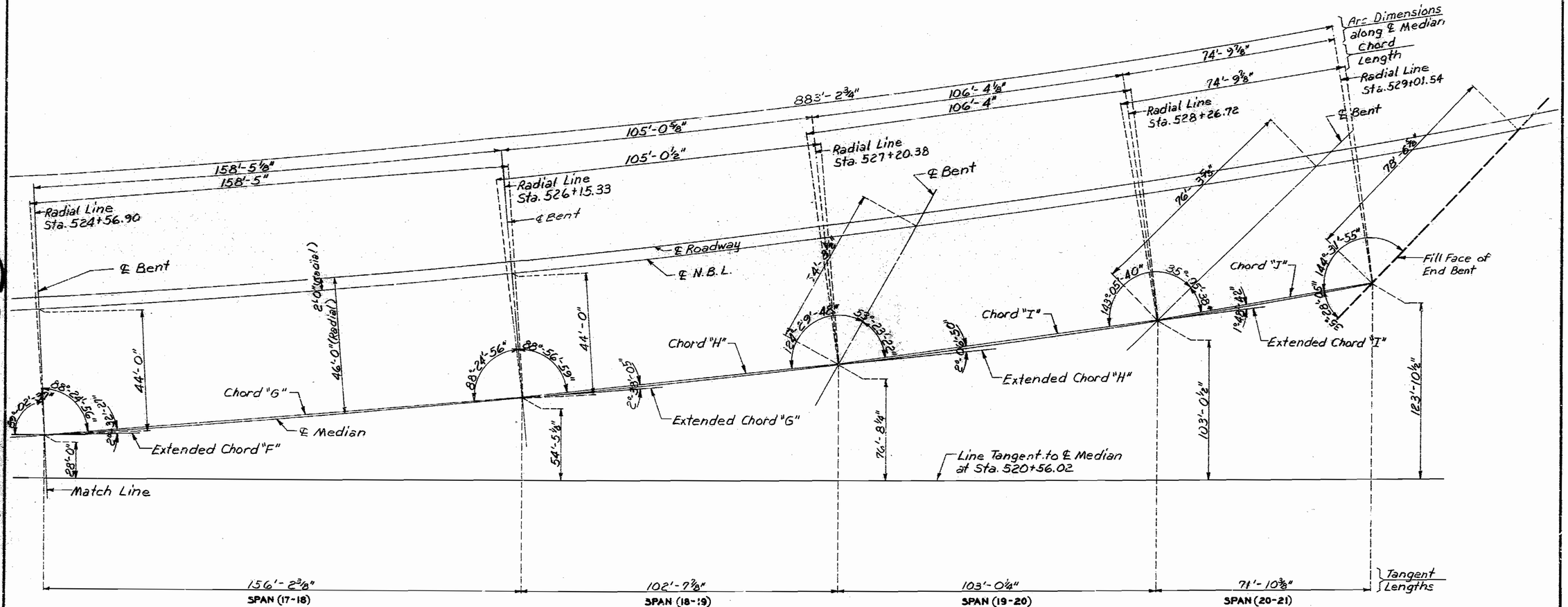

PART LAYOUT DATA FOR SUBSTRUCTURE

Note: All dimensions are horizontal.

158 363

DETAILED	MAY 1988
CHECKED	Aug. 1988

Note: This drawing is not to scale. Follow dimensions.

JACKSON COUNTY

A-2733

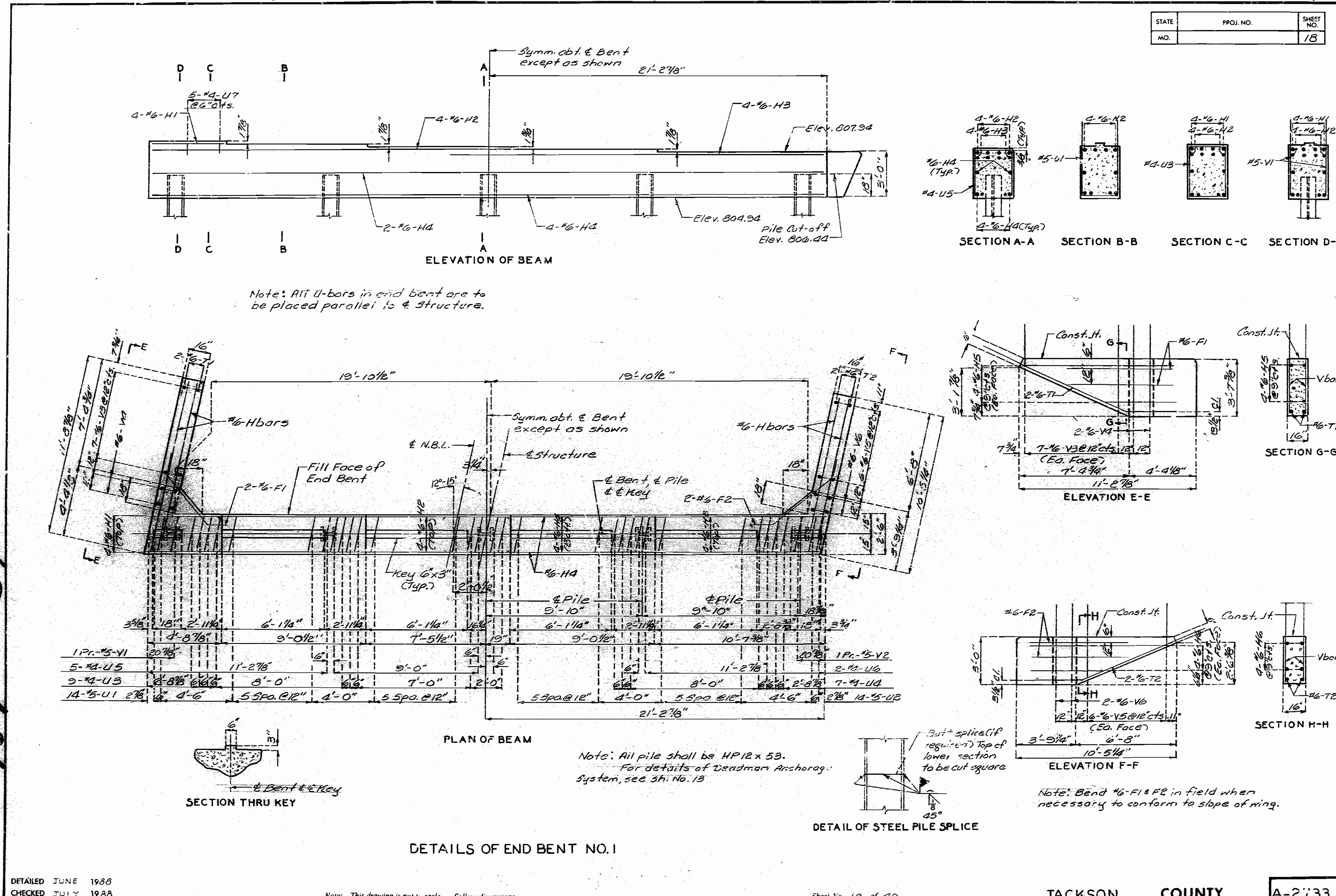
STATE | PROJ. NO. | SHEET NO.
MO. | | 18
Symm. abt. ℄ Bent except as shown
21'-2 7/8"
5-#4-U7 @6" Cts.
4-#6-H1
4-#6-H2
4-#6-H3
Elev. 807.94
2-#6-H4
4-#6-H4
Elev. 804.94
Pile Cut-off Elev. 806.44
5'-0"
18"
ELEVATION OF BEAM
#6-H4 (Typ.)
#4-U5
4-#6-H4 (Typ.)
#5-U1
#4-U3
#5-V1
SECTION A-A
SECTION B-B
SECTION C-C
SECTION D-D
Note: All U-bars in end bent are to be placed parallel to ℄ Structure.
19'-10 1/2"
#6-Hbars
℄ N.B.L.
Symm. abt. ℄ Bent except as shown
℄ Structure
Fill Face of End Bent
2-#6-F1
2-#6-F2
12°-15'
℄ Bent, ℄ Pile & ℄ Key
Key 6"x3" (Typ.)
#6-H4
℄ Pile
9'-10"
1 Pr.-#5-V1
5-#4-U5
9-#4-U3
14-#5-U1
1 Pr.-#5-V2
2-#4-U6
7-#4-U4
14-#5-U2
5 Spa. @12"
PLAN OF BEAM
SECTION THRU KEY
℄ Bent & ℄ Key
Note: All pile shall be HP 12 x 53.
For details of Deadman Anchorage System, see Sh. No. 13
Butt splice (if required) Top of lower section to be cut square
45°
DETAIL OF STEEL PILE SPLICE
Const. Jt.
#6-F1
2-#6-T1
2-#6-V4
7-#6-V3 @12" cts. (Ea. Face)
7'-4 3/4"
4'-4 1/8"
11'-2 7/8"
ELEVATION E-E
Vbars
#6-T1
SECTION G-G
#6-F2
2-#6-T2
2-#6-V6
6-#6-V5 @12" cts. (Ea. Face)
3'-9 1/4"
6'-8"
10'-5 1/4"
ELEVATION F-F
#6-T2
SECTION H-H
Note: Bend #6-F1 & F2 in field when necessary to conform to slope of wing.
DETAILS OF END BENT NO. 1
DETAILED JUNE 1988
CHECKED JULY 1988
Note: This drawing is not to scale. Follow dimensions.
Sheet No. 12 of 49
JACKSON COUNTY
A-2733

STATE	PROJ. NO.	SHEET NO.
MO.		19

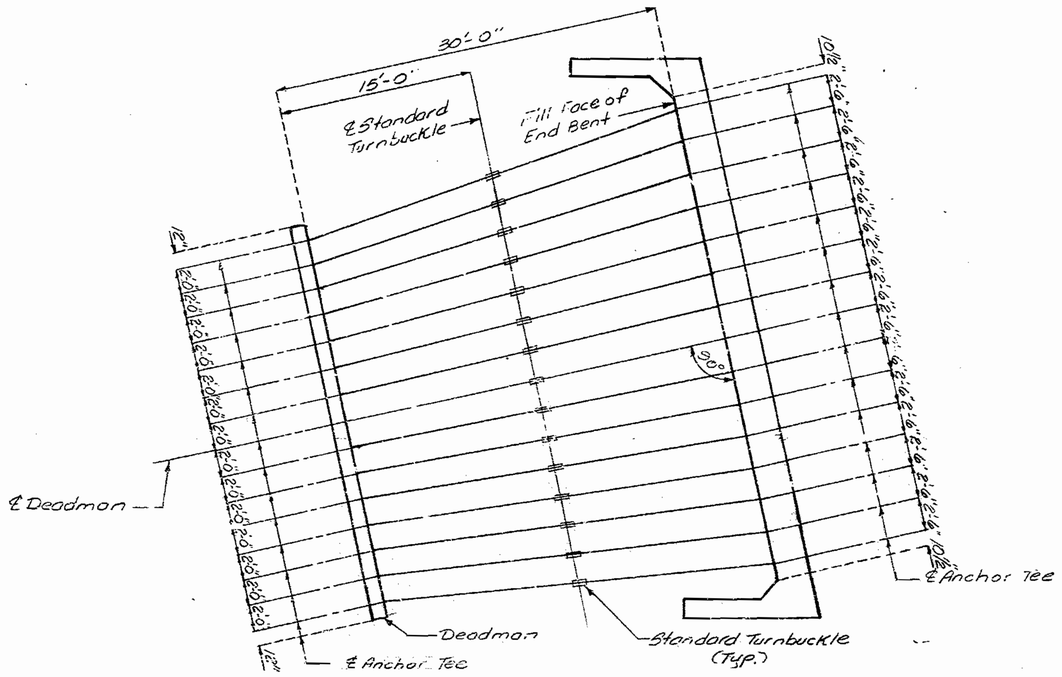

PLAN

NOTES:

CONSTRUCTION SEQUENCE:

CONSTRUCT END BENT WITH ANCHOR TEES IN PLACE.

MACHINE COMPACT FILL UP TO ELEVATION OF 7/8"ø ROD AND TURNBUCKLE.

CONSTRUCT DEADMAN WITH ANCHOR TEES IN PLACE.

INSTALL 7/8"ø ROD, CLEVIS AND TURNBUCKLE ASSEMBLY.

TIGHTEN TURNBUCKLE UNTIL SNUG.

HAND COMPACT FILL FOR 12" (MIN.) OVER 7/8"ø ROD AND TURNBUCKLE.

MACHINE COMPACT REMAINING FILL.

BILL OF REINFORCING STEEL EACH DEADMAN

NUMBER	SIZE & MARK	LENGTH
8	#4-H500	29'-8"
120	#4-V500	2'-2"

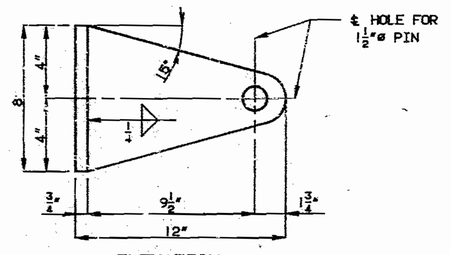

ELEVATION

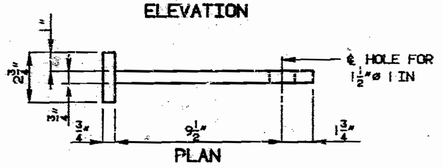

PLAN

DETAIL OF ANCHOR TEE

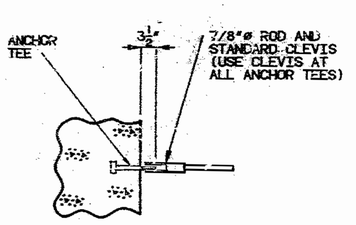

DETAIL "B"

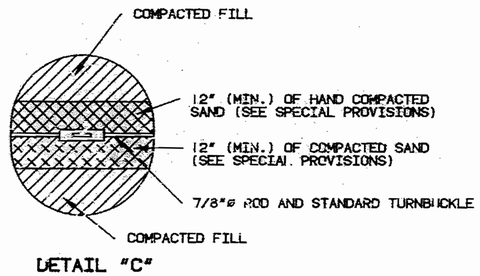

DETAIL "C"

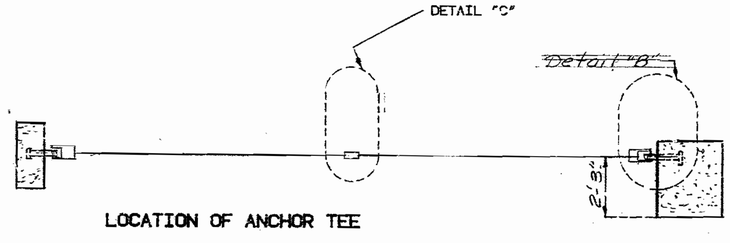

LOCATION OF ANCHOR TEE

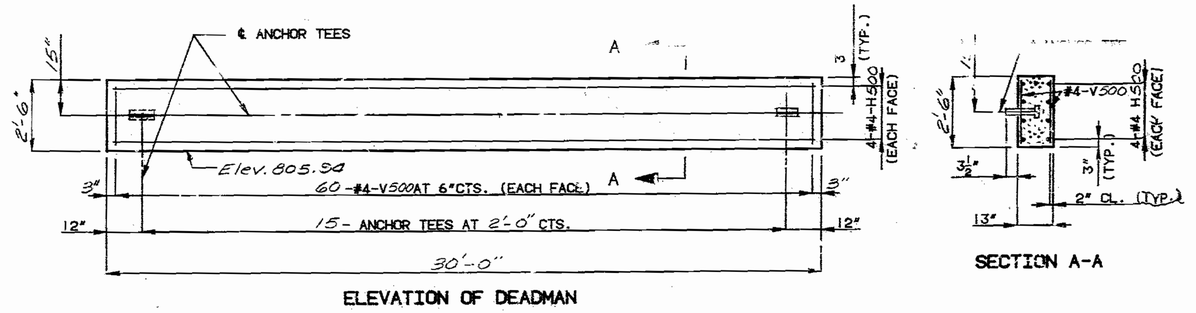

ELEVATION OF DEADMAN

SECTION A-A

STD. D.M.A.	JULY 1984	REVISED	JULY 1988

DETAILED AUG. 1988
CHECKED AUG. 1988

DETAILS OF DEADMAN ANCHORAGE SYSTEM AT BENT NO. 1

Note: This drawing is not to scale. Follow dimensions.

Sheet No. 13 of 43

JACKSON COUNTY

A-2733

STATE	PROJ. NO.	SHEET NO.
MO.		20

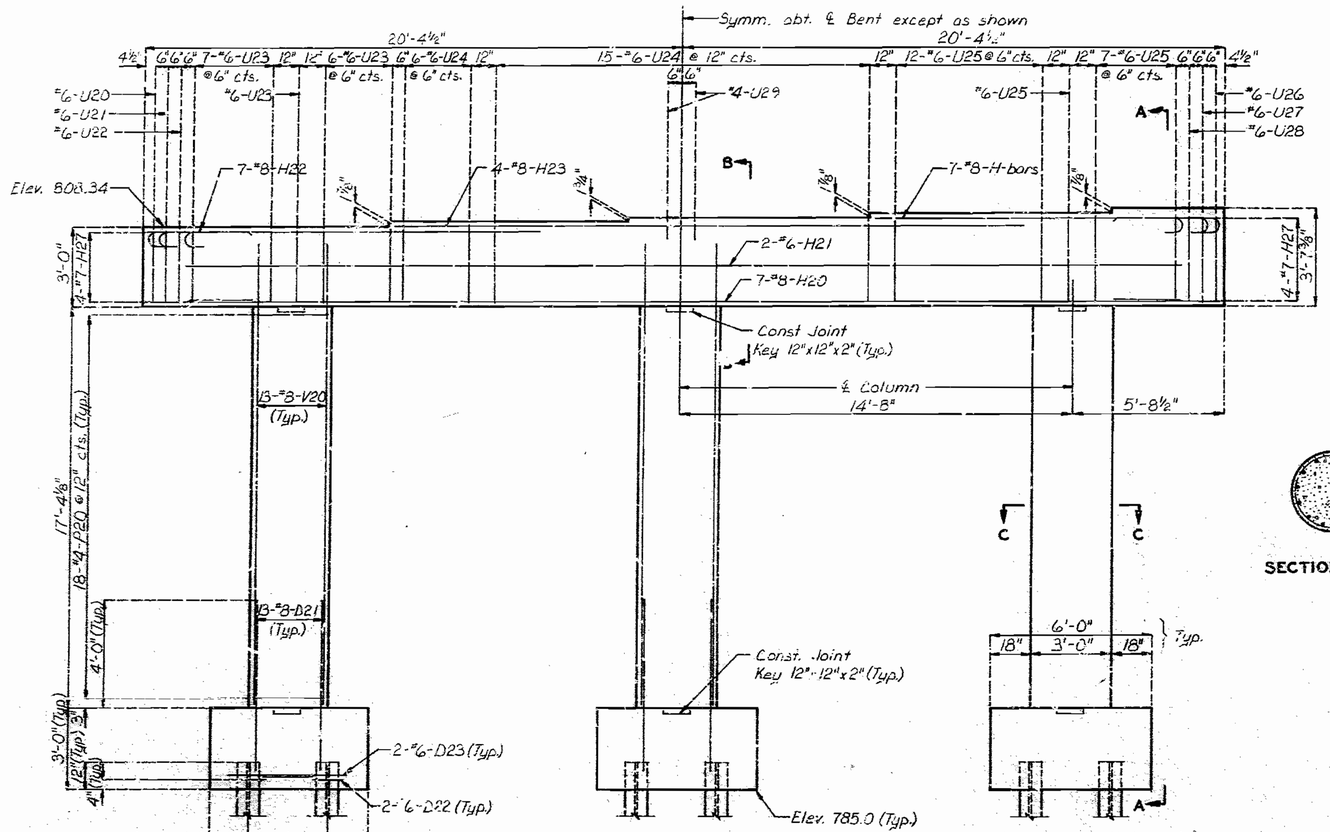

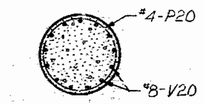

SECTION C-C

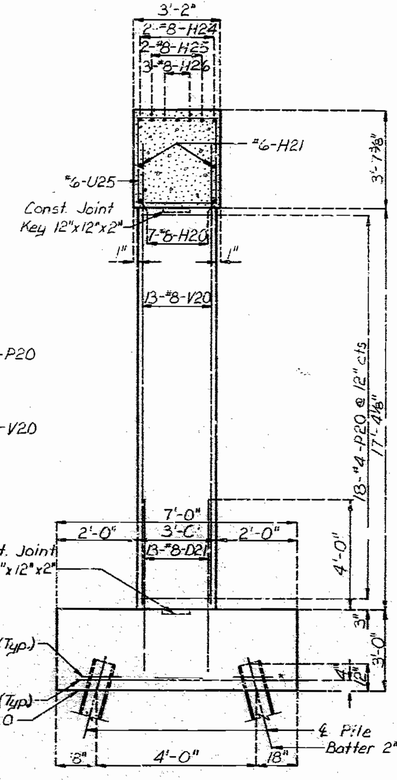

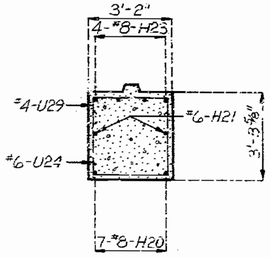

SECTION B-B

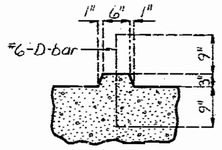

DETAIL OF KEY

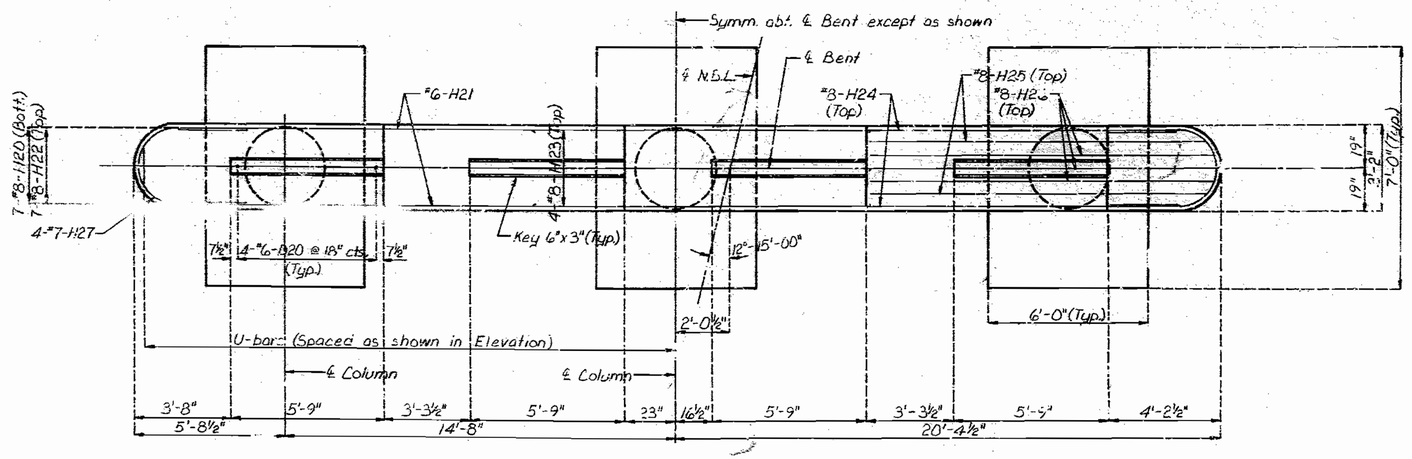

PLAN

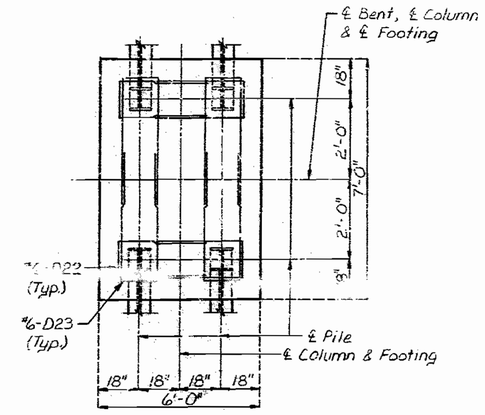

PLAN OF FOOTING

DETAILED June 1988
CHECKED JULY 1988

DETAILS OF INTERMEDIATE BENT NO. 2

Note: This drawing is not to scale. Follow dimensions.

STATE	PROJ. NO.	SHEET NO.
MO.		21

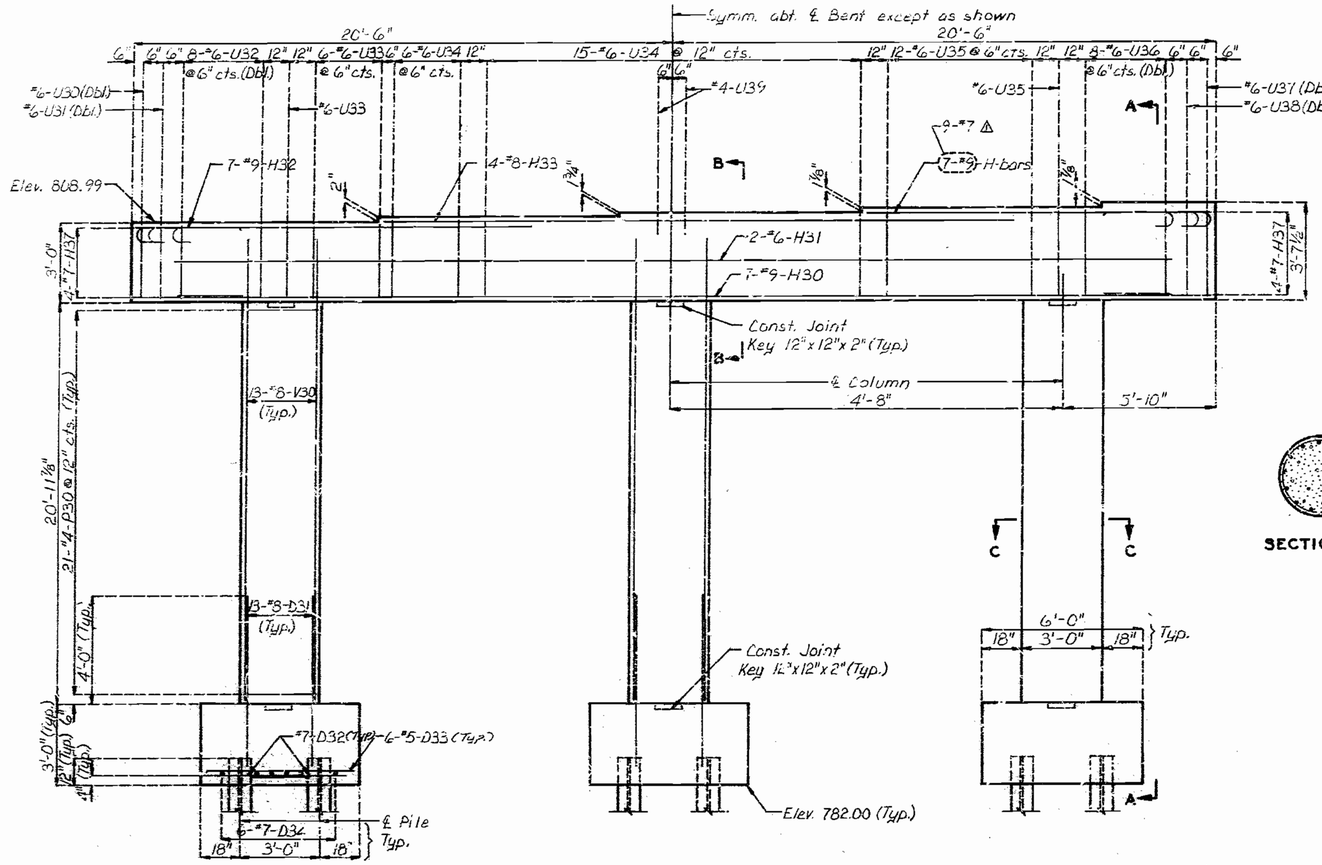

ELEVATION

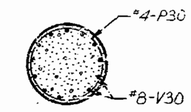

SECTION C-C

⚠ H34, H35 & H36 bars shall be evenly distributed at top of beam.

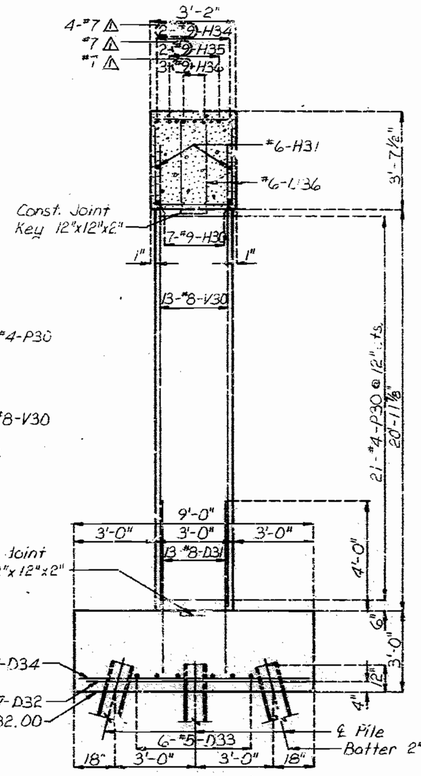

SECTION A-A

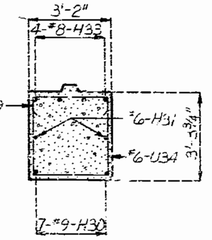

SECTION B-B

Note : For detail of key, see Sheet No. 14.

Note : For detail of Steel Pile Splice see Sheet No. 12.
All piles shall be HP10x42.

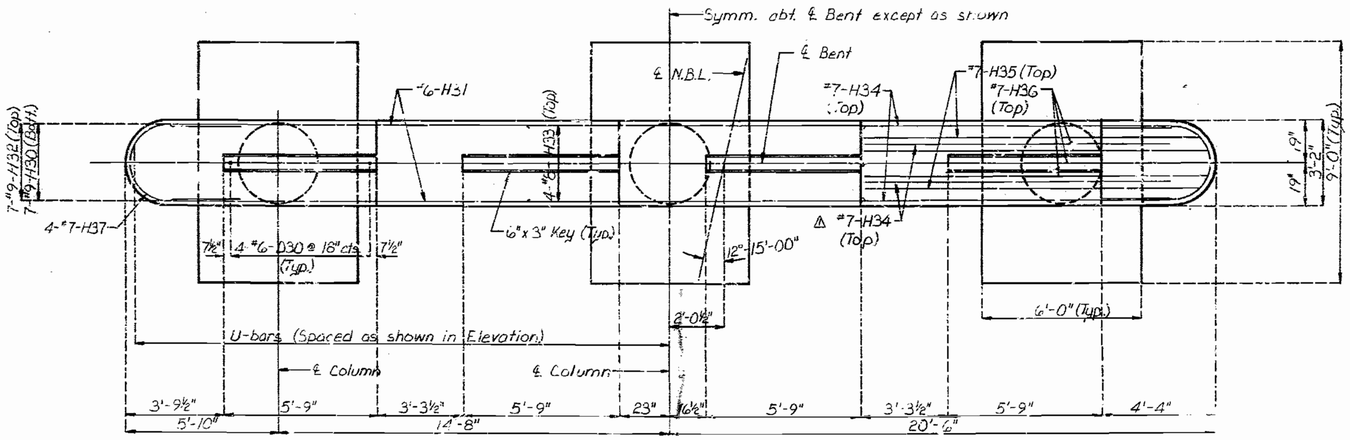

PLAN

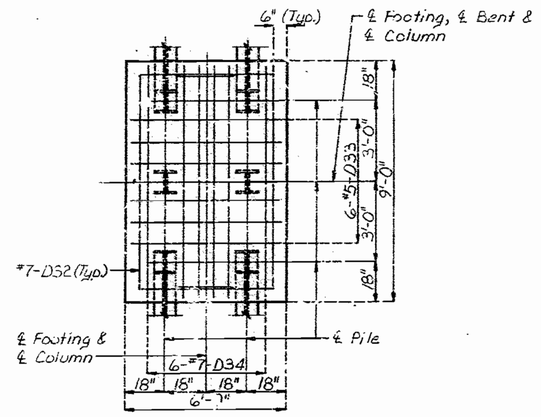

PLAN OF FOOTING

DETAILED June 1988
CHECKED JULY 1988

DETAILS OF INTERMEDIATE BENT NO. 3

Note: This drawing is not to scale. Follow dimensions.

SEE FINAL PLANS
Sheet No. 15 of 49

⚠ Revised 5/3/89

JACKSON COUNTY

A-2733

1332 267

STATE	PROJ. NO.	SHEET NO.
MO.		22

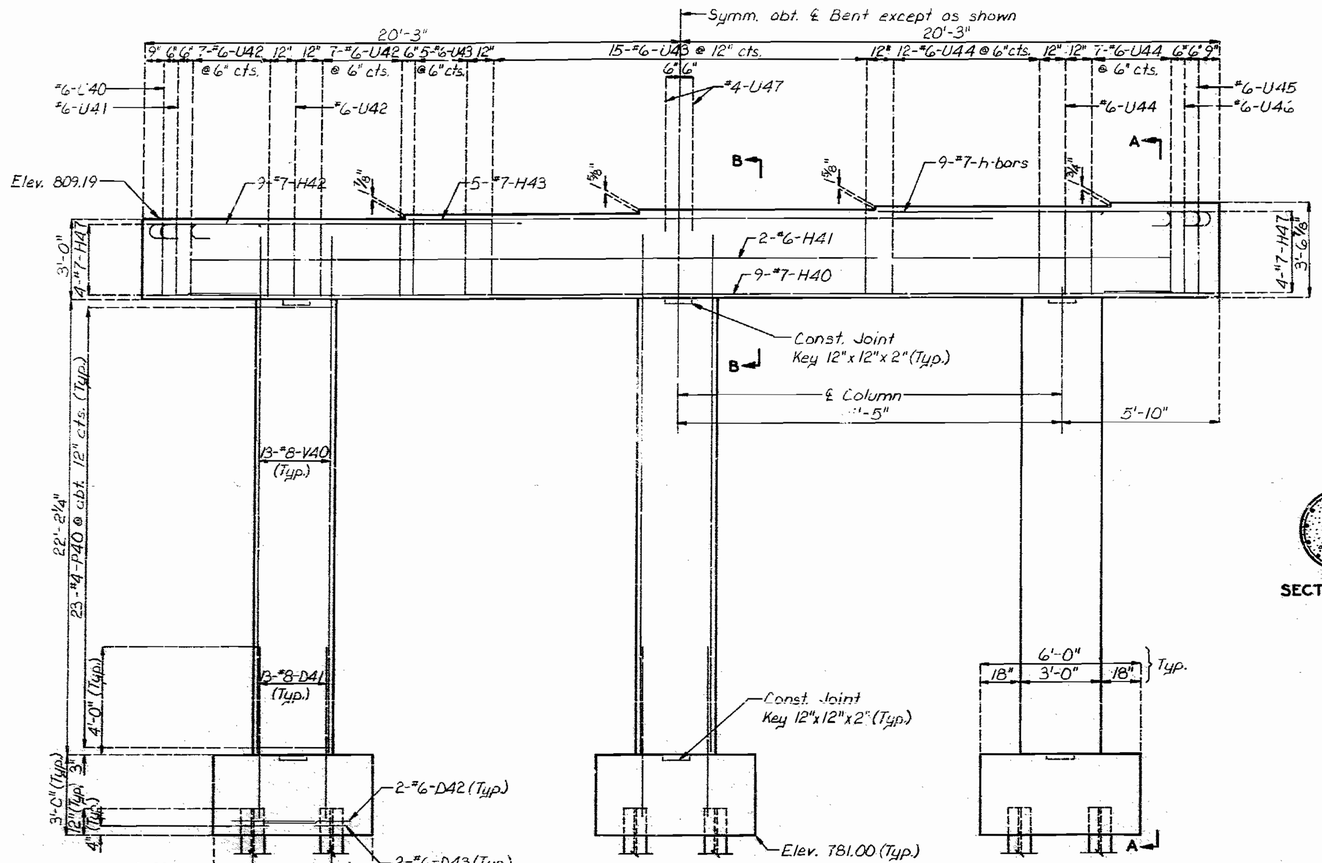

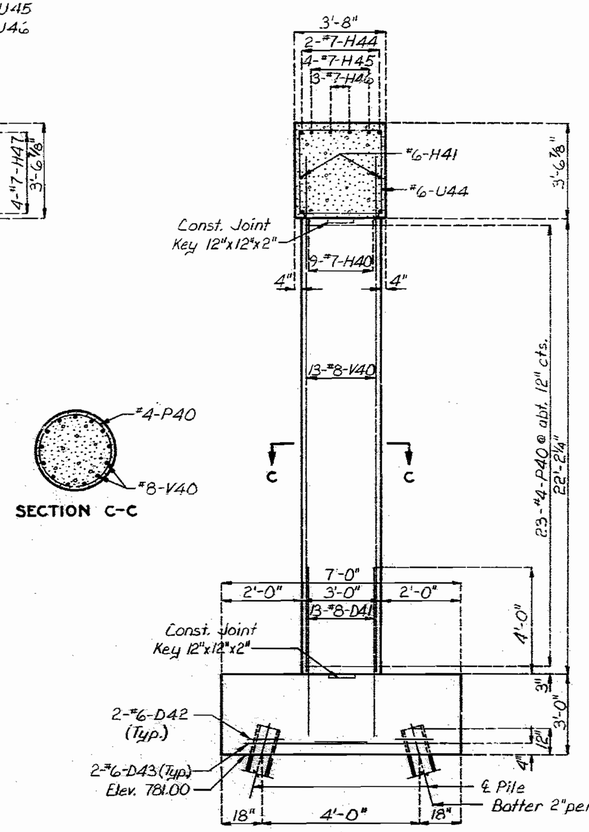

SECTION C-C

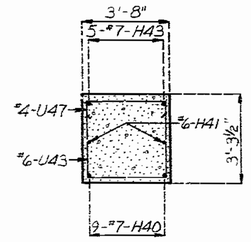

SECTION B-B

Note : For details of Steel Pile Splice see Sheet No. 12.
All piles shall be HP12x53.
For details of Anchor Bolt Well see Sheet No. 42.

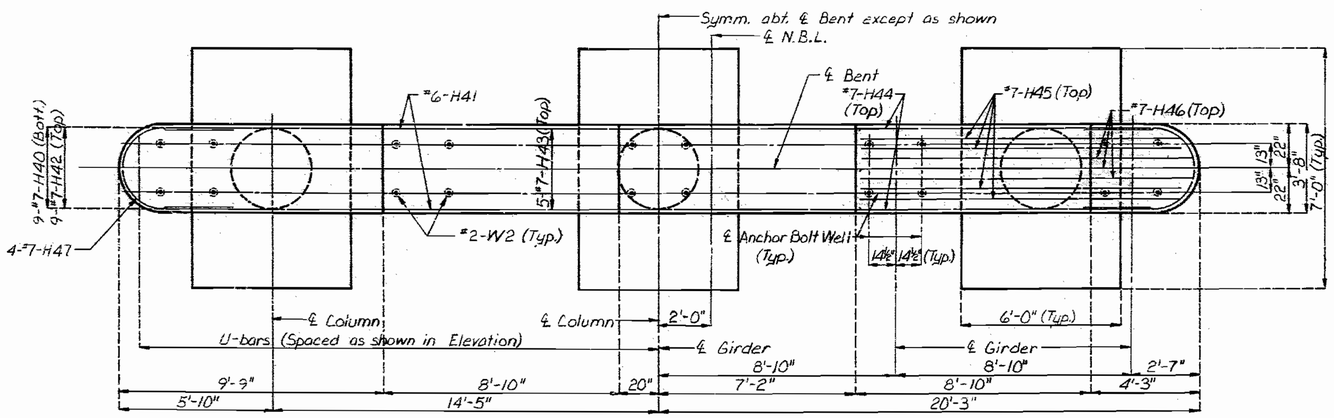

PLAN

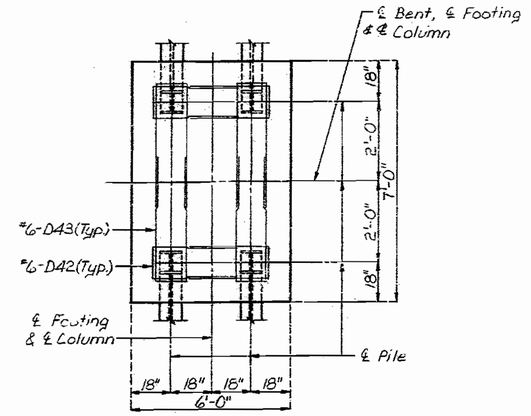

PLAN OF FOOTING

DETAILS OF INTERMEDIATE BENT NO. 4

DETAILED June 1988
CHECKED July 1988

Note: This drawing is not to scale. Follow dimensions.

Sheet No. 16 of 49

JACKSON COUNTY

A-2733

163 368

STATE	PROJ. NO.	SHEET NO.
MO.		23

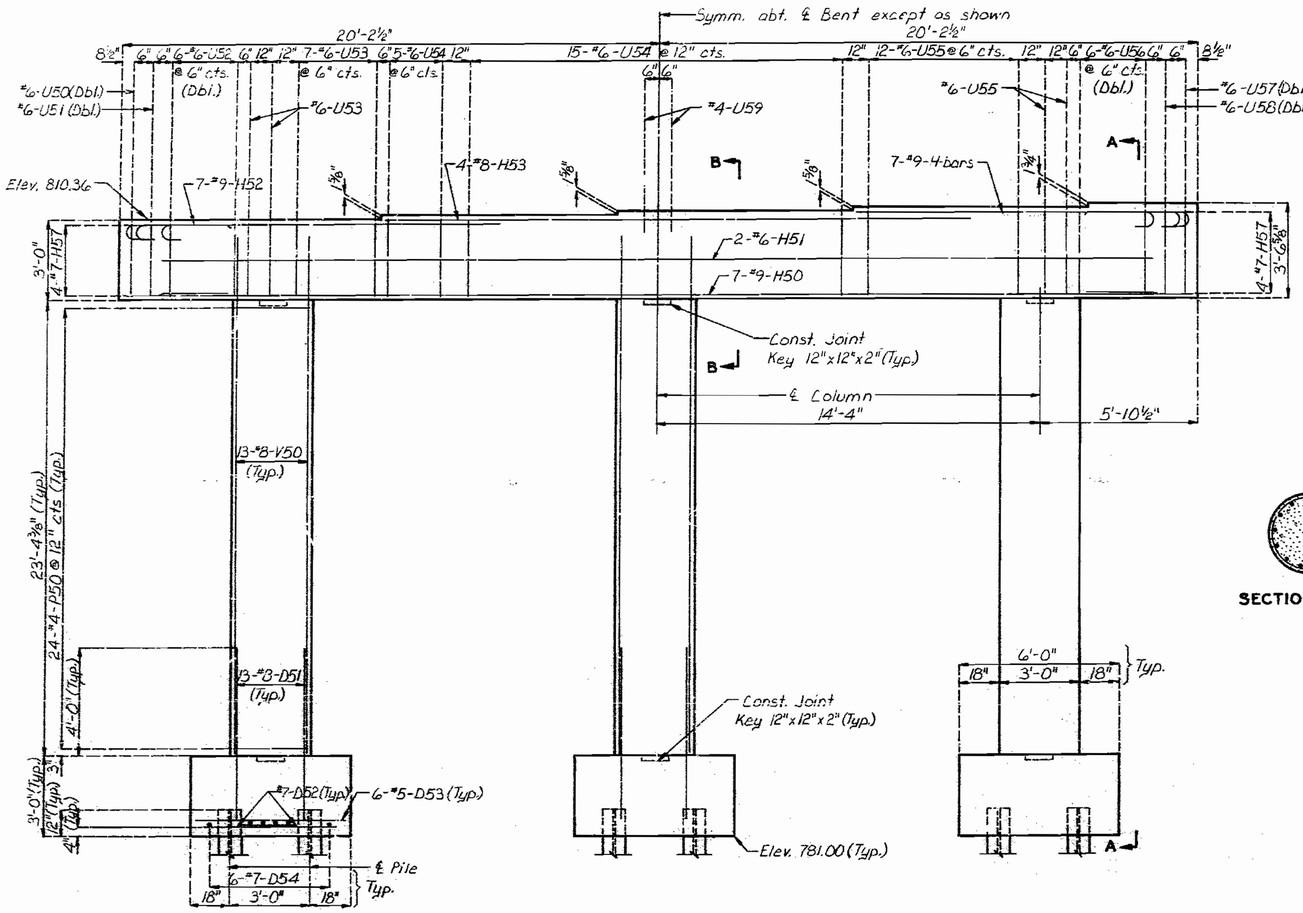

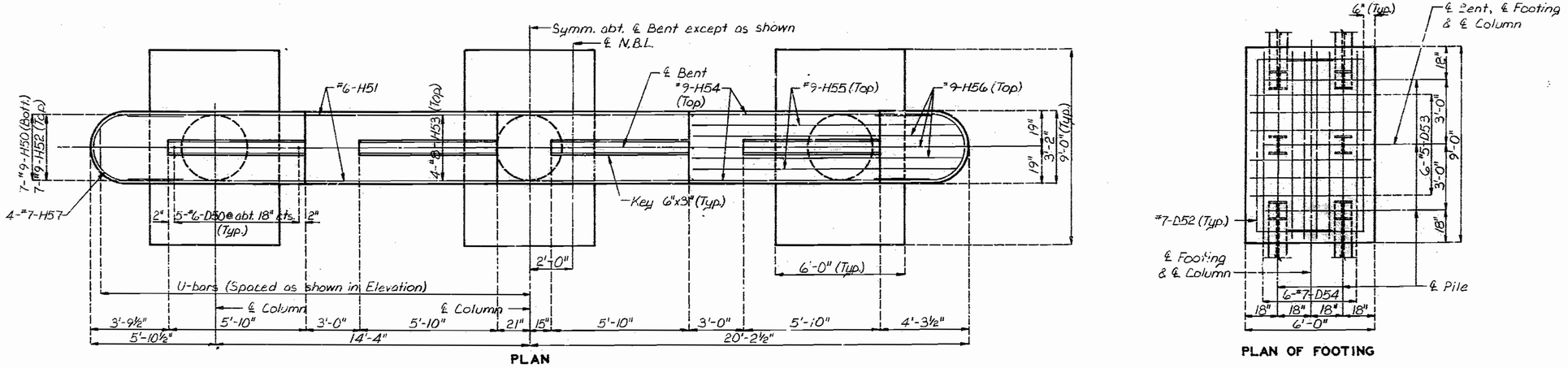

DETAILED June 1988
CHECKED July 1988

DETAILS OF INTERMEDIATE BENT NO. 5

Note: This drawing is not to scale. Follow dimensions.

Sheet No. 17 of 49

JACKSON COUNTY

A-2733

Sht 28

STATE	PROJ. NO.	SHEET NO.
MO.		24

Note: For plan of beam & plan of footing, see sh. No. 13
For section B-B, see sh. No. 19

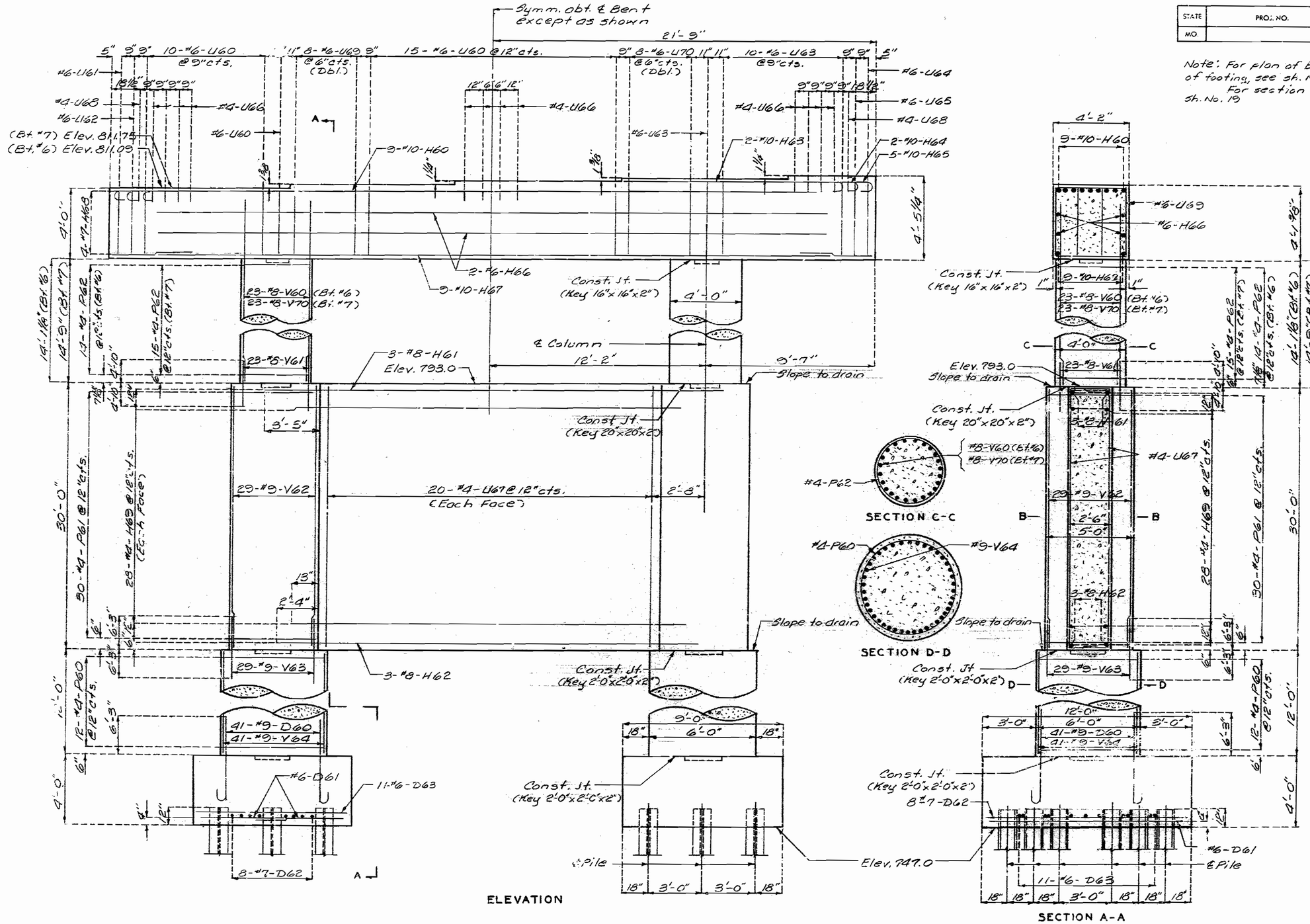

DETAILS OF INTERMEDIATE BENTS NO. 6 & 7

DETAILED AUG. 1988
CHECKED AUG. 1988

Note: This drawing is not to scale. Follow dimensions.

15-32

STATE	PROJ. NO.	SHEET NO.
MO.		25

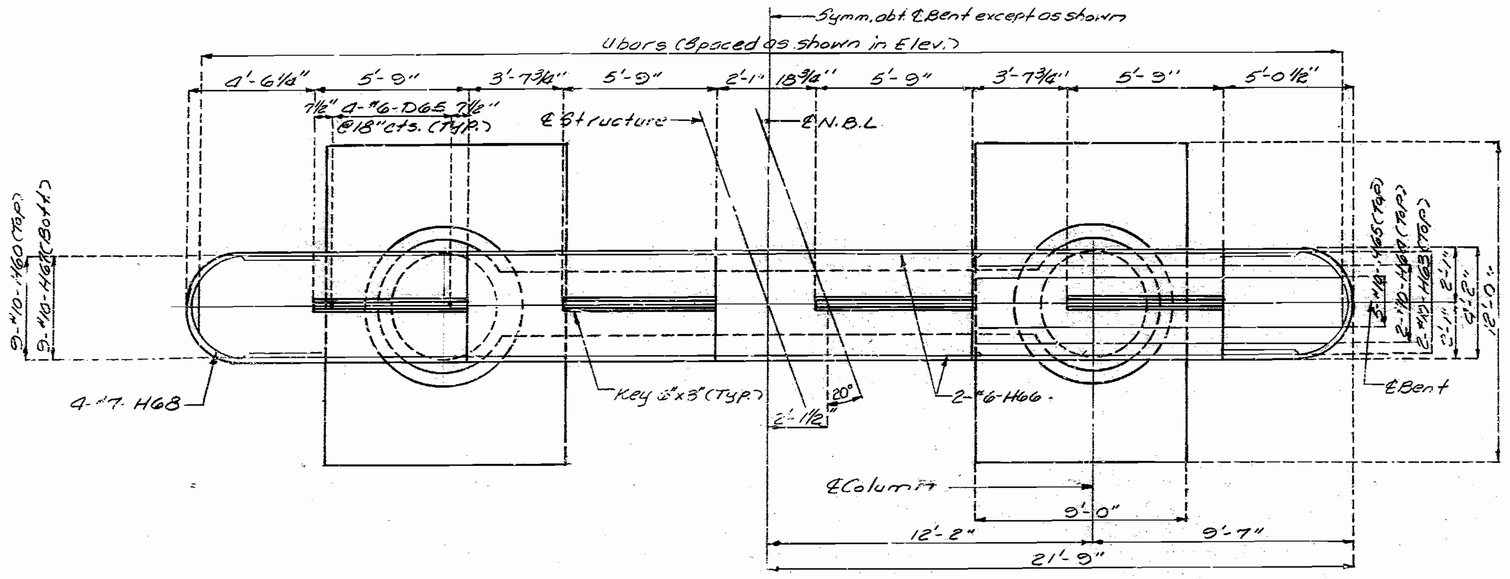

PLAN

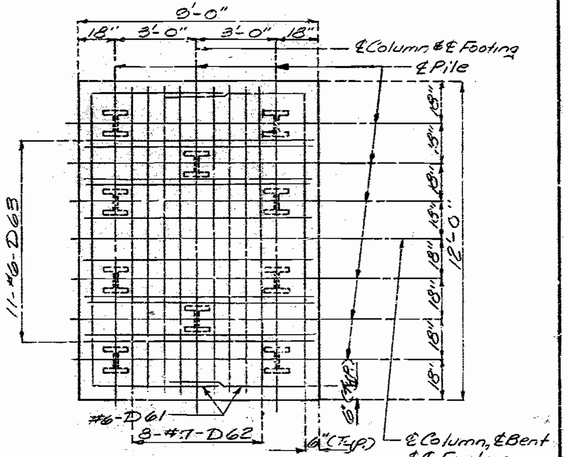

PLAN OF FOOTING

Note: All pile shall be HP12 x 53

Note: For detail of Key, see Sh. No. 14
For location of Section B-B, see sh. No. 18
For detail of steel pile splice, see sh. No. 12

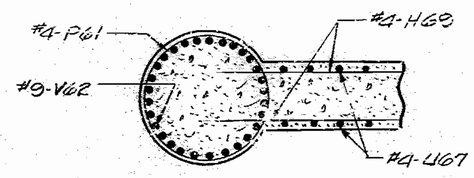

SECTION B-B

DETAILS OF INTERMEDIATE BENTS NO. 6 & 7

DETAILED AUG. 19 88
CHECKED AUG 19 88

Note: This drawing is not to scale. Follow dimensions.

Sheet No. 19 of 49

JACKSON COUNTY

A-2733

STATE	PROJ. NO.	SHEET NO.
MO.		26

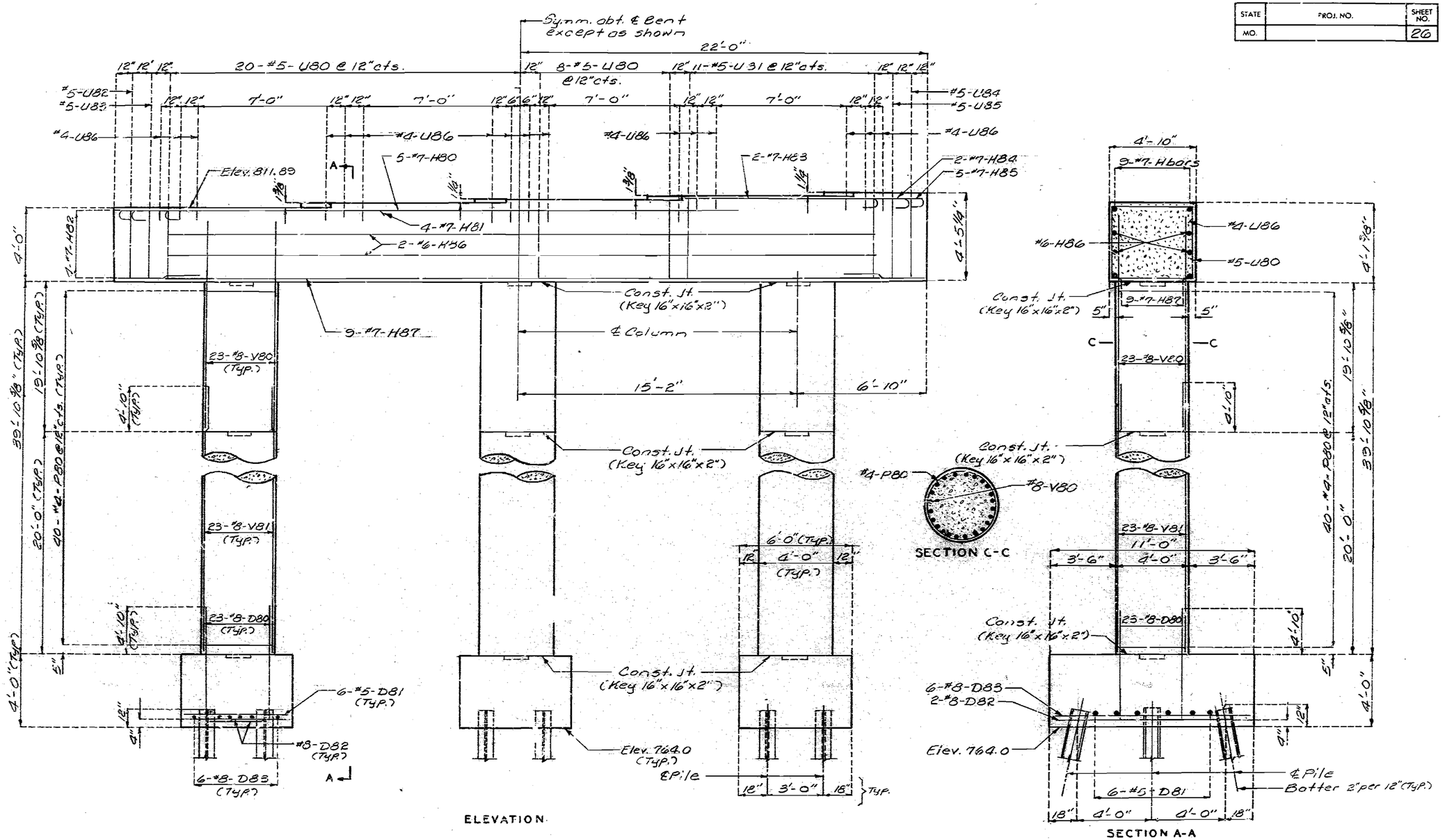

Note: For plan of beam and plan of footing, see sh. No. 21.

DETAILS OF INTERMEDIATE BENT NO. 8

STATE	PROJ. NO.	SHEET NO.
MO.		27

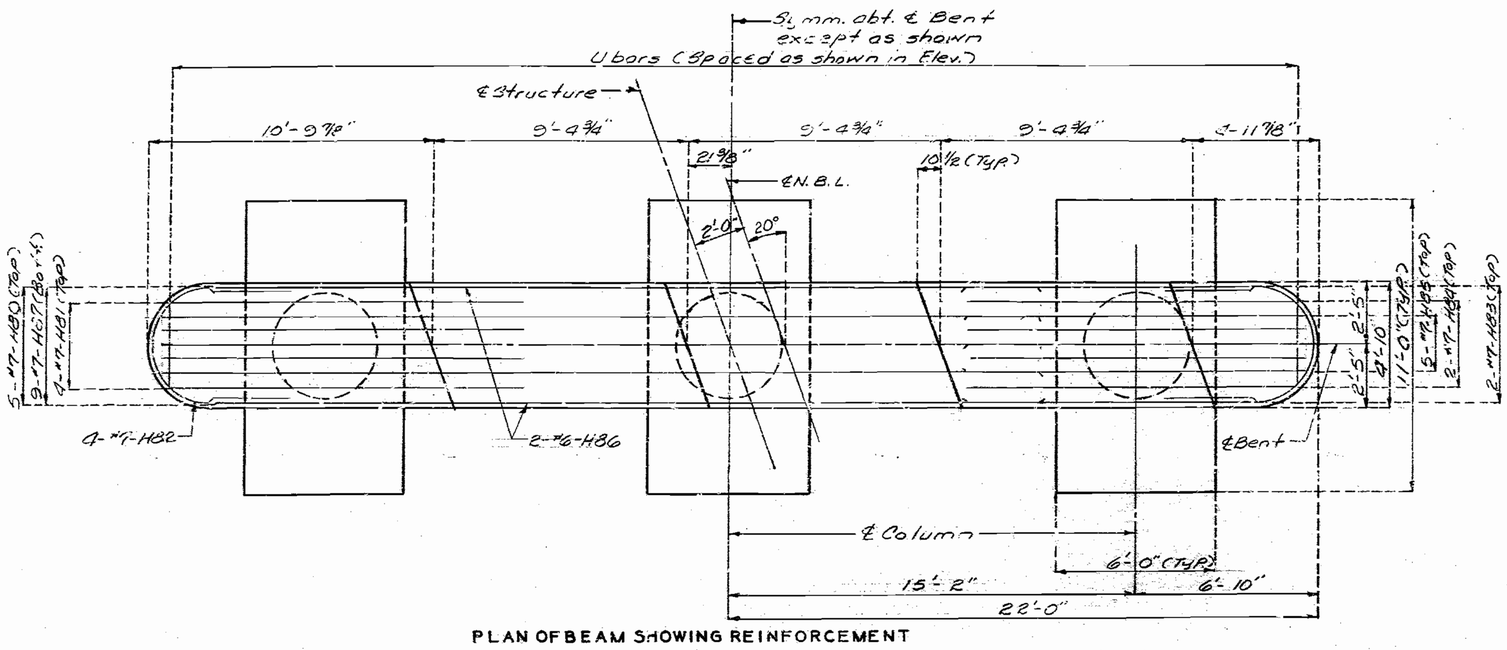

PLAN OF BEAM SHOWING REINFORCEMENT

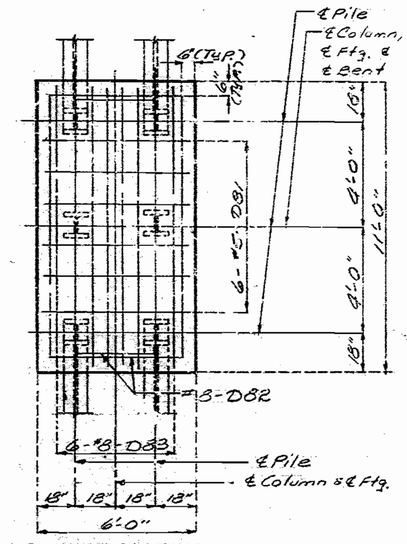

PLAN OF FOOTING

Note: For detail of steel pile splice, see sh. No. 12
All piles shall be HP10 x 42.
For detail of anchor bolt wells, see sh. No. 42

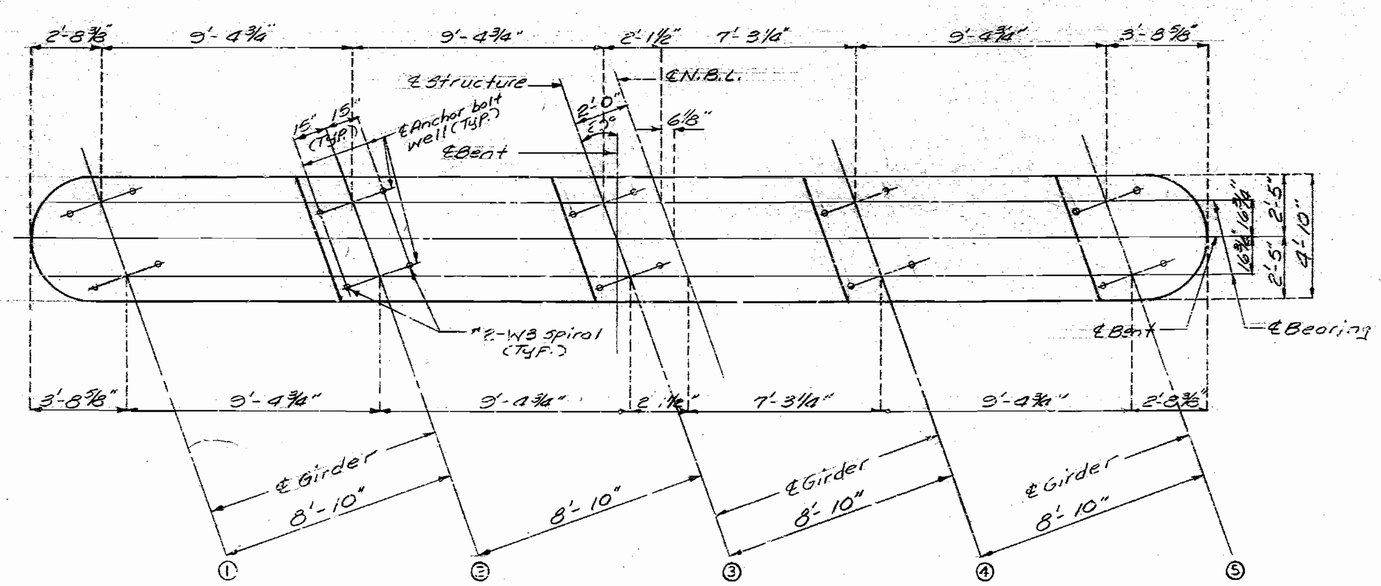

PLAN OF BEAM SHOWING LOCATION OF ANCHOR BOLT WELLS

DETAILS OF INTERMEDIATE BENT NO. 8

DETAILED JULY 1988
CHECKED AUG. 1988

Note: This drawing is not to scale. Follow dimensions.

168-273

STATE	PROJ. NO.	SHEET NO.
MO.		28

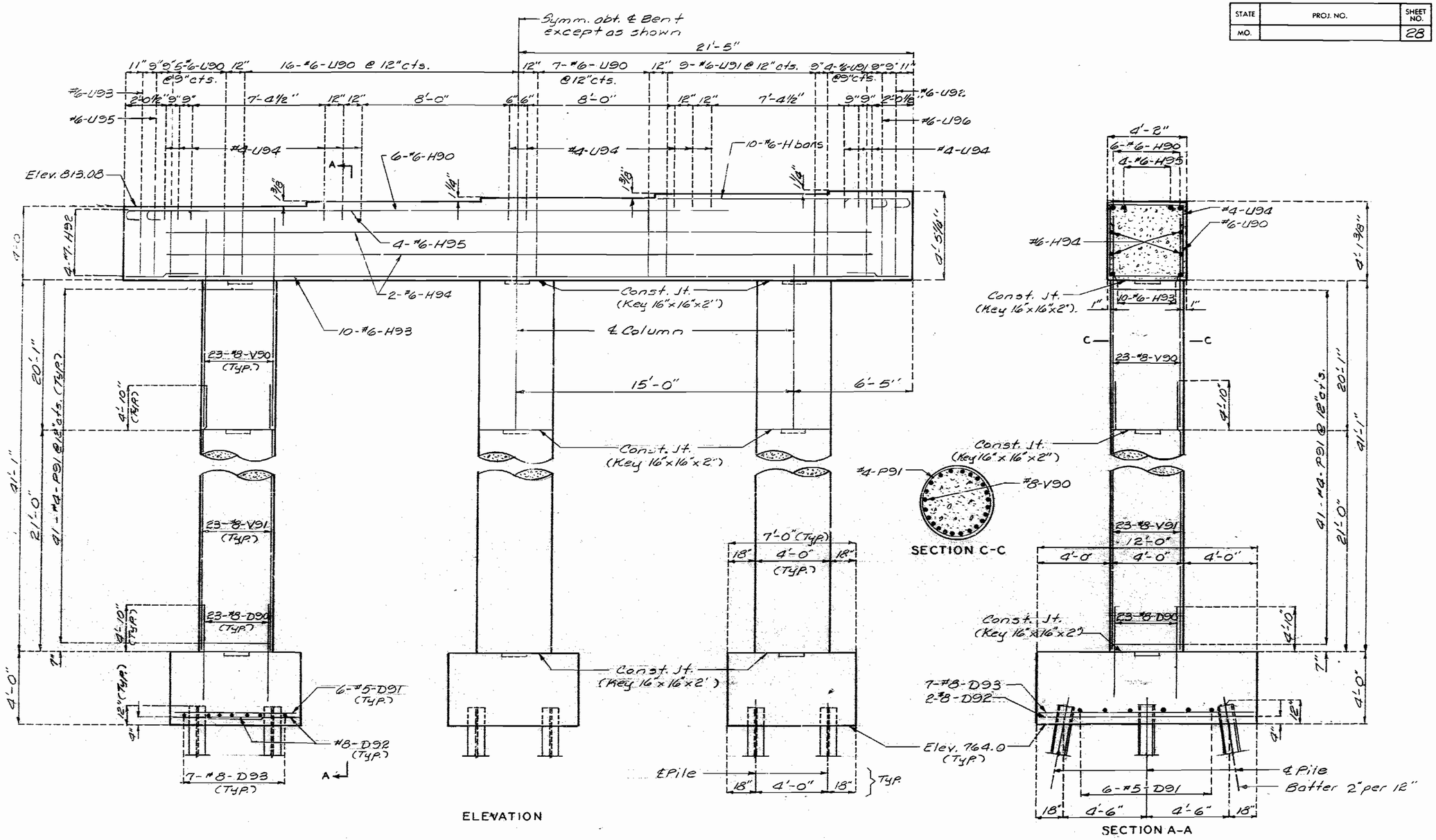

Note: For plan of bent and plan of footing, see sh. No. 24

DETAILS OF INTERMEDIATE BENT NO. 9

DETAILED JULY 1988
CHECKED JULY 1988

Note: This drawing is not to scale. Follow dimensions.

Sheet No. 22 of 49

JACKSON COUNTY

A-2733

STATE	PROJ. NO.	SHEET NO.
MO		29

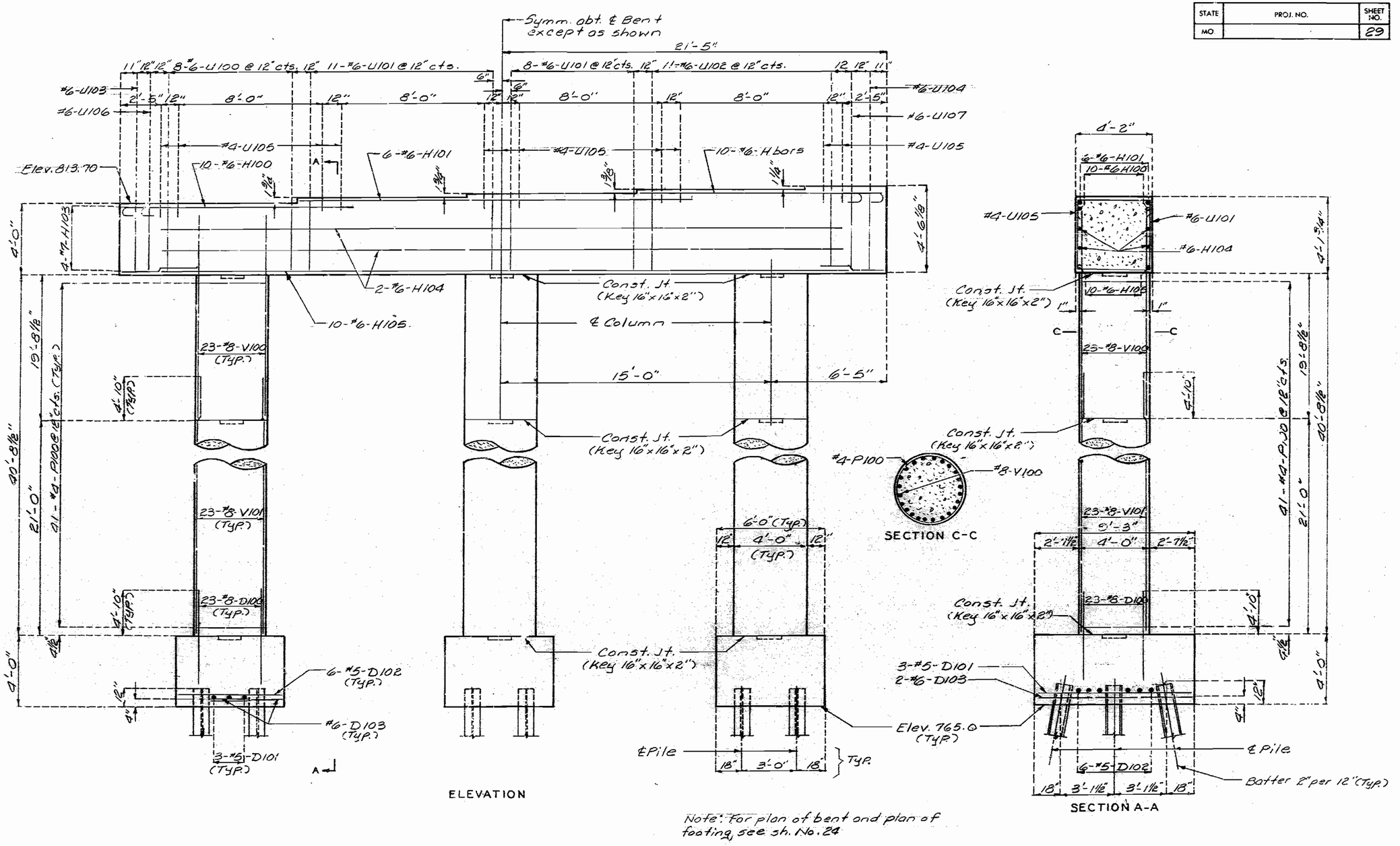

DETAILS OF INTERMEDIATE BENT NO. 10

DETAILED JULY 1988
CHECKED AUG. 1988

Note: This drawing is not to scale. Follow dimensions.

Sheet No. 23 of 49

JACKSON COUNTY A-2733

STATE	PROJ. NO.	SHEET NO.
MO.		30

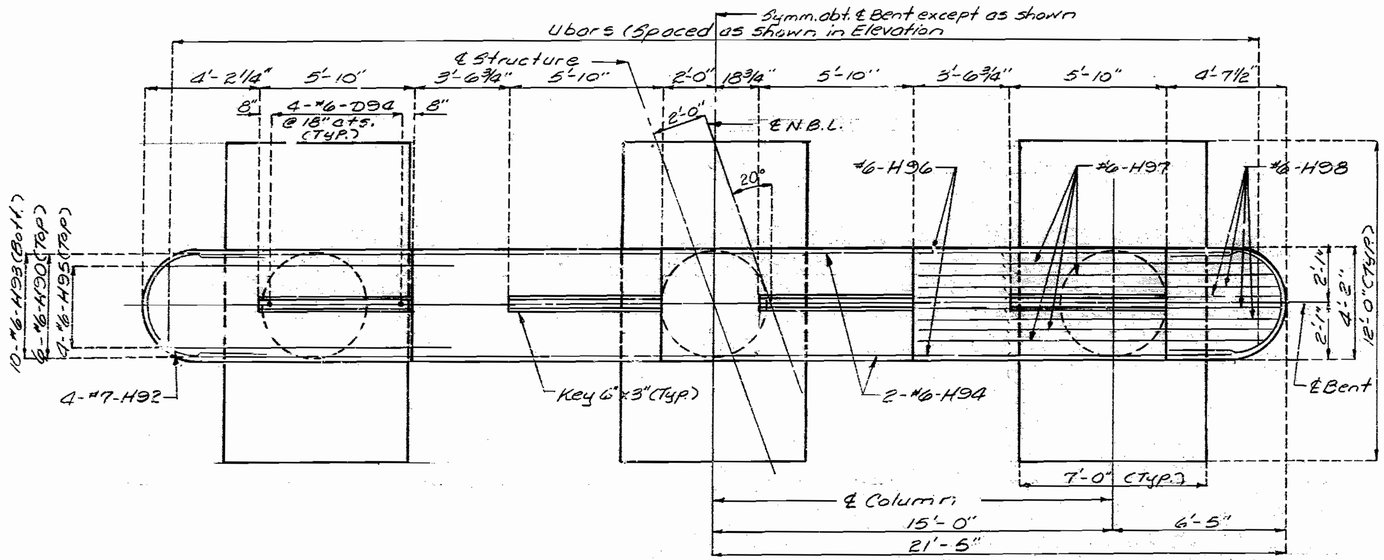

PLAN OF BENT NO. 9

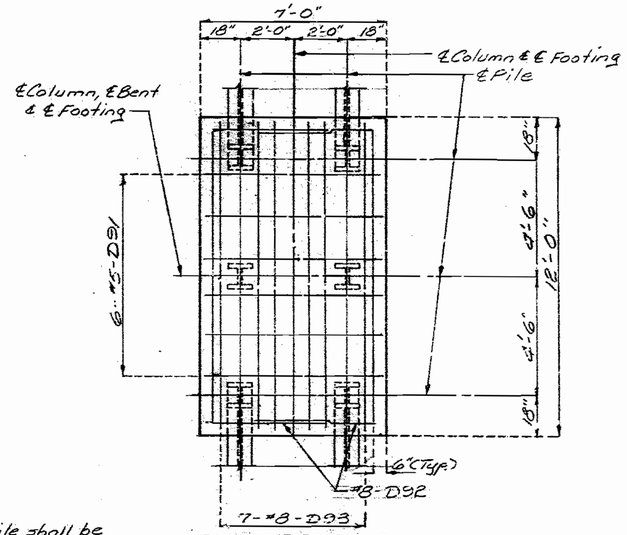

PLAN OF FOOTING SHOWING REINFORCEMENT (BENT NO. 9)

Note: All pile shall be HP 10 x 42

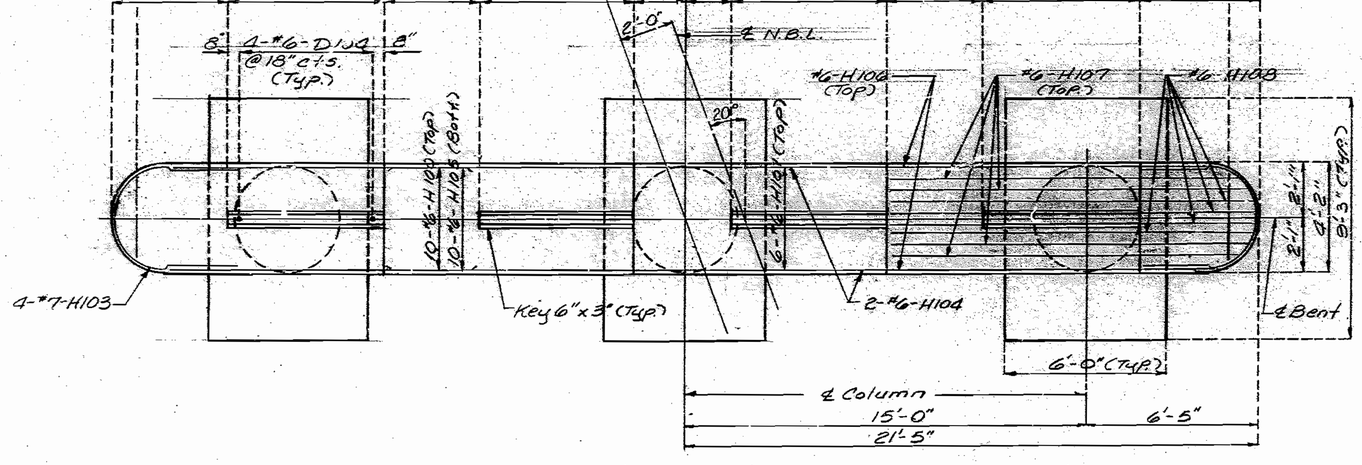

PLAN OF BENT NO.10

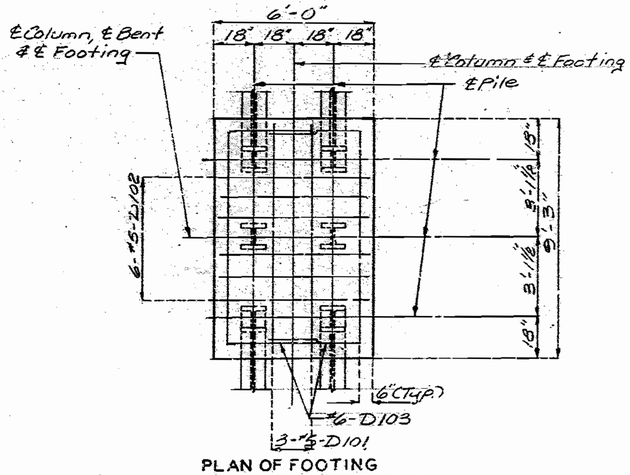

PLAN OF FOOTING SHOWING REINFORCEMENT (BENT NO.10)

Note: For Detail of Key, see Sh. No. 19

DETAILED JULY 1988
CHECKED AUG. 1988

DETAILS OF INTERMEDIATE BENT NO. 9 & 10

Note: This drawing is not to scale. Follow dimensions.

Note: For location of Chord "K" see Sheet No. 10.
For detail of key see Sheet No. 14
All piles shall be HP10x42.
For detail of Steel Pile Splice see Sheet No. 12.

STATE	PROJ. NO.	SHEET NO.
MO.		31

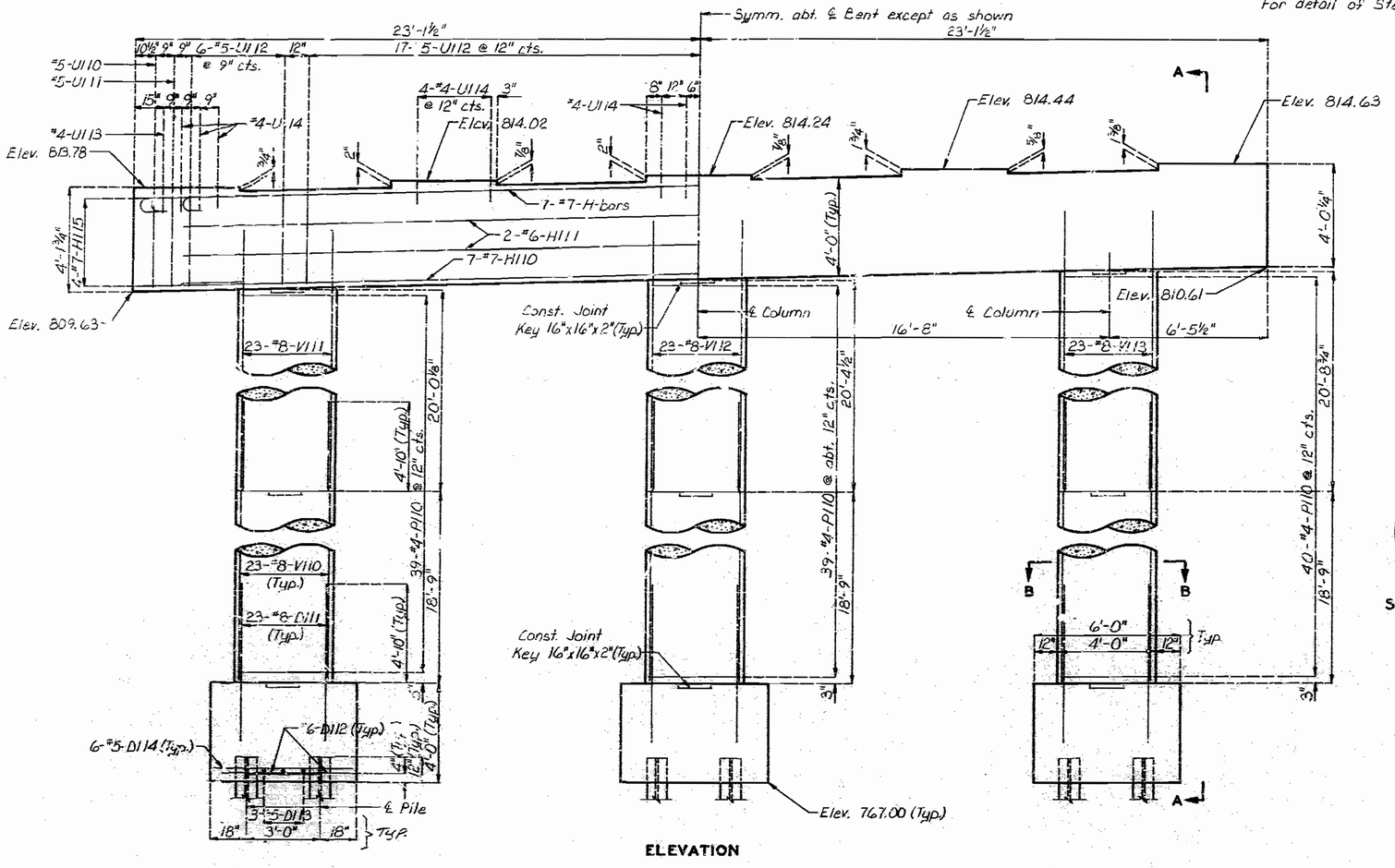

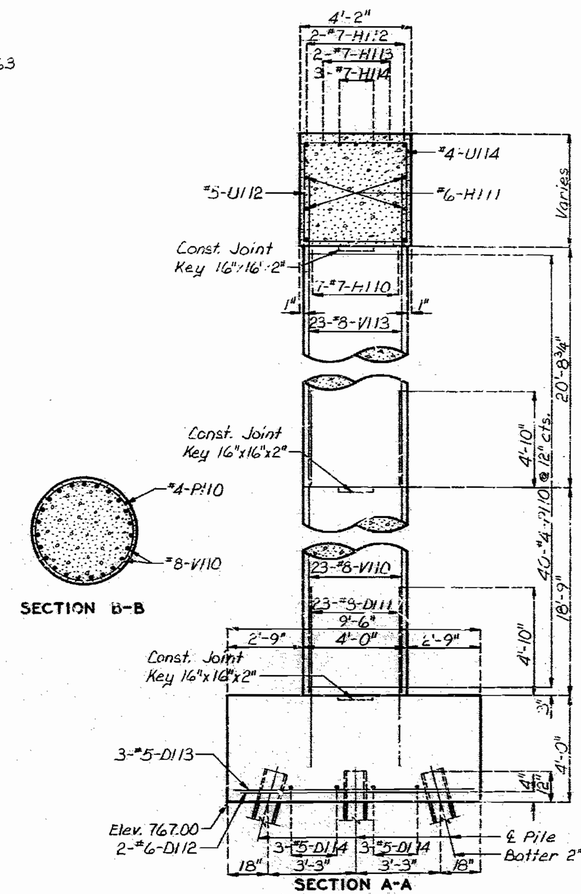

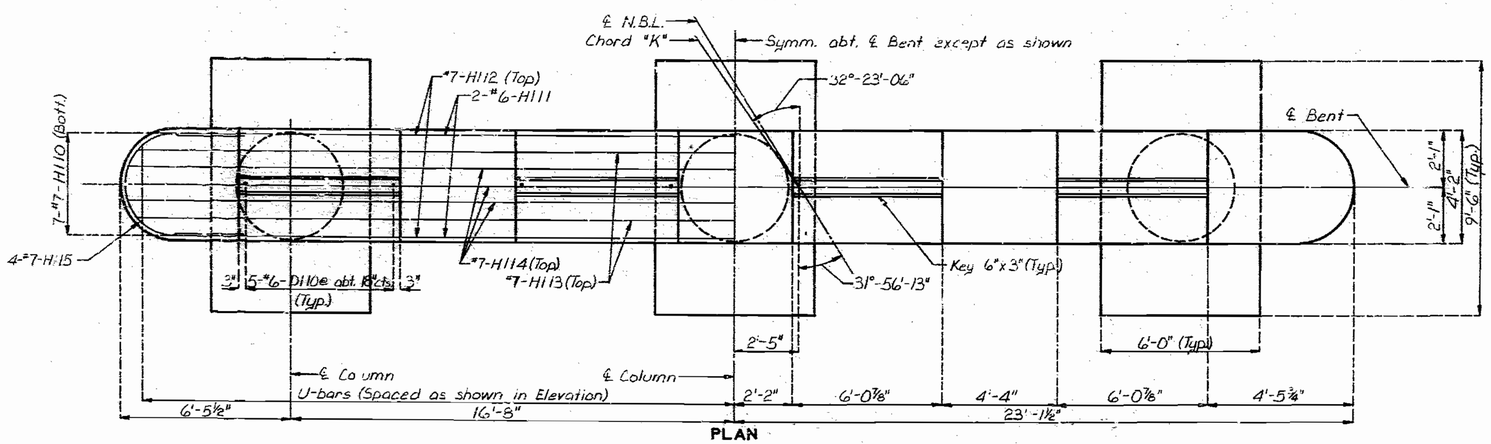

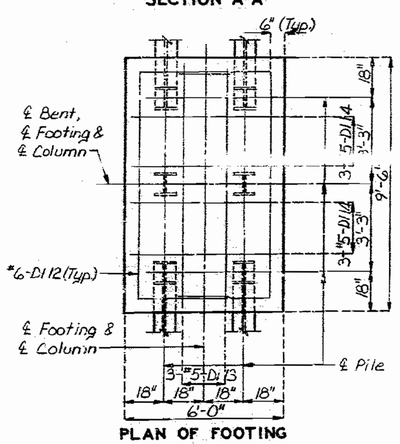

DETAILED Aug 1988
CHECKED Aug. 1988

DETAILS OF INTERMEDIATE BENT NO. 11

Note: This drawing is not to scale. Follow dimensions.

JACKSON COUNTY

A-2733

STATE	PROJ. NO.	SHEET NO.
MO.		32

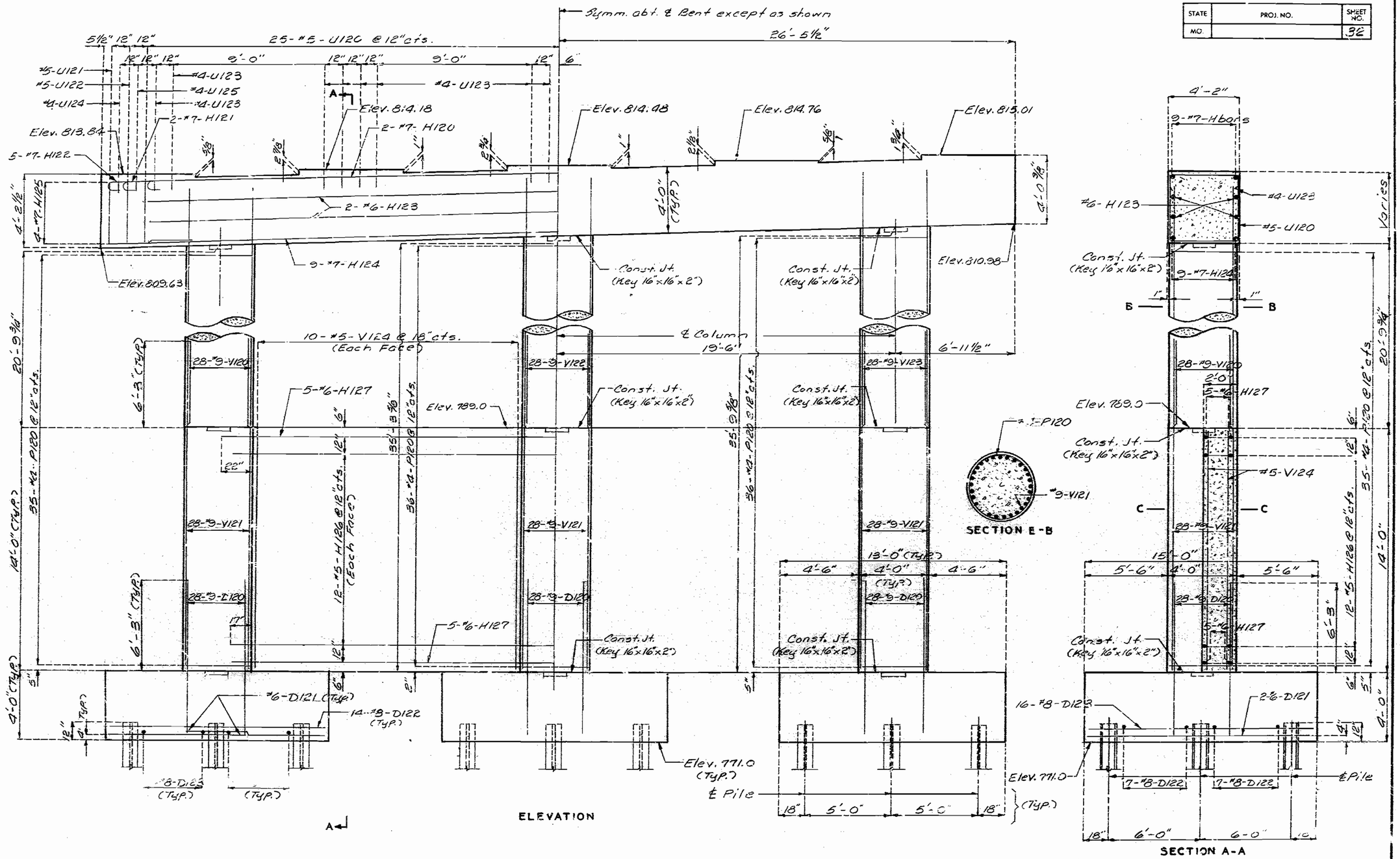

Note: For plan of bent and plan of footing, see sh. No. 27

Note: For section C-C, see sh. No. 27

DETAILS OF INTERMEDIATE BENT NO. 12

DETAILED JULY 1988
CHECKED Aug 1988

Note: This drawing is not to scale. Follow dimensions.

Sheet No. 26 of 49

JACKSON COUNTY

A-2733

143 278

STATE	PROJ. NO.	SHEET NO.
MO.		33

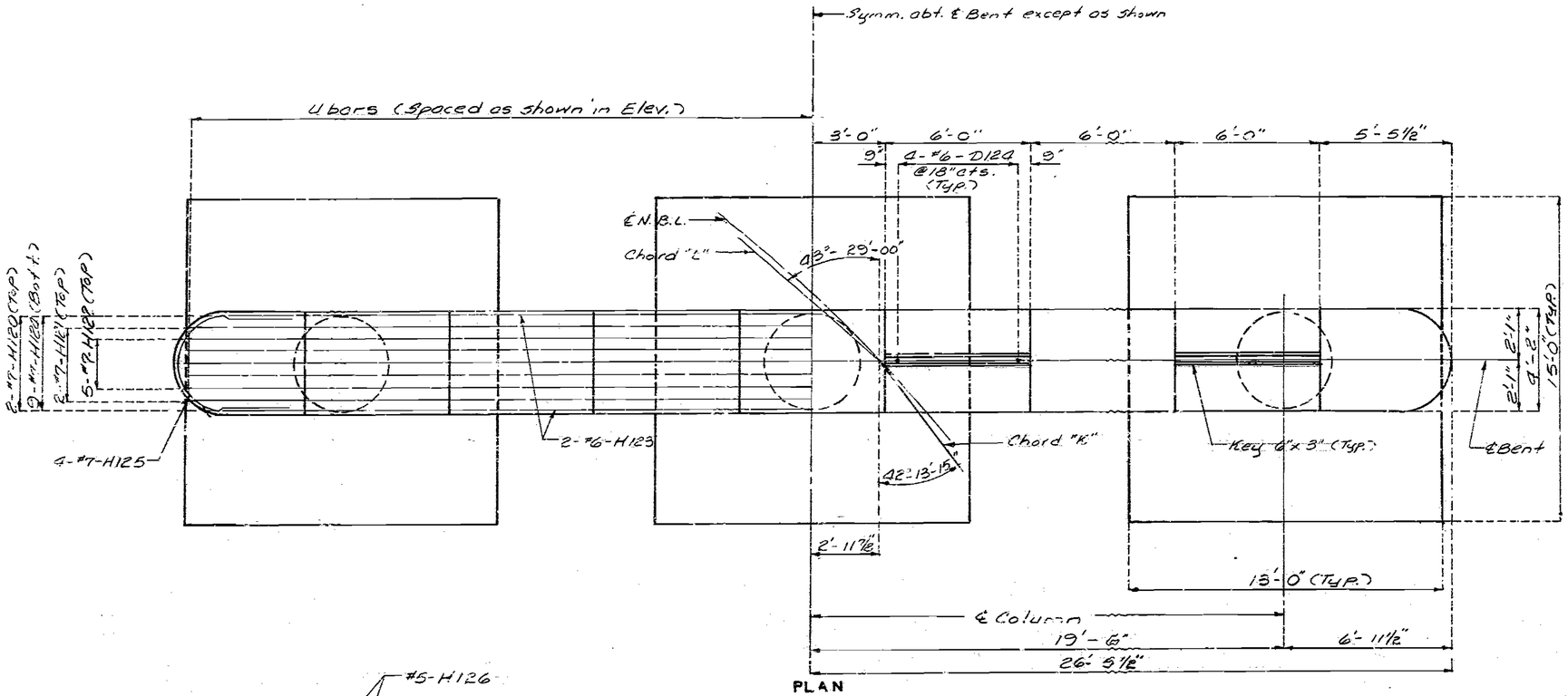

PLAN

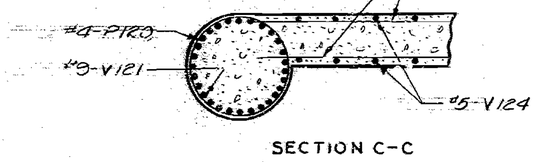

SECTION C-C

Note: For location of section C-C, see sh. No. 26

Note: For detail of steel pile splice, see sh. No. 12
All piles shall be HP 10x42
For detail of key see sh. No. 14
For location of chord "K" and "L", see sh. No. 10

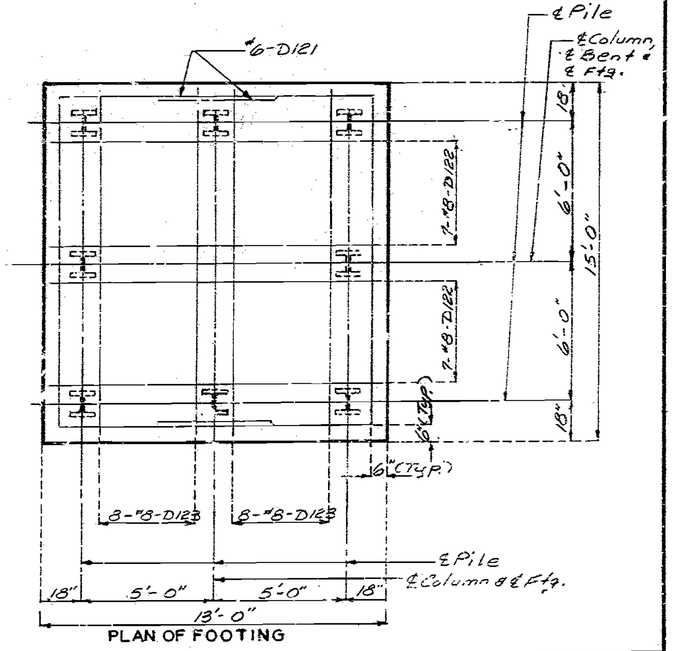

PLAN OF FOOTING

DETAILS OF INTERMEDIATE BENT NO. 12

DETAILED AUG. 1988
CHECKED AUG. 1988

Note: This drawing is not to scale. Follow dimensions.

JACKSON COUNTY

A-2733

STATE	PROJ. NO	SHEET NO
MO		34

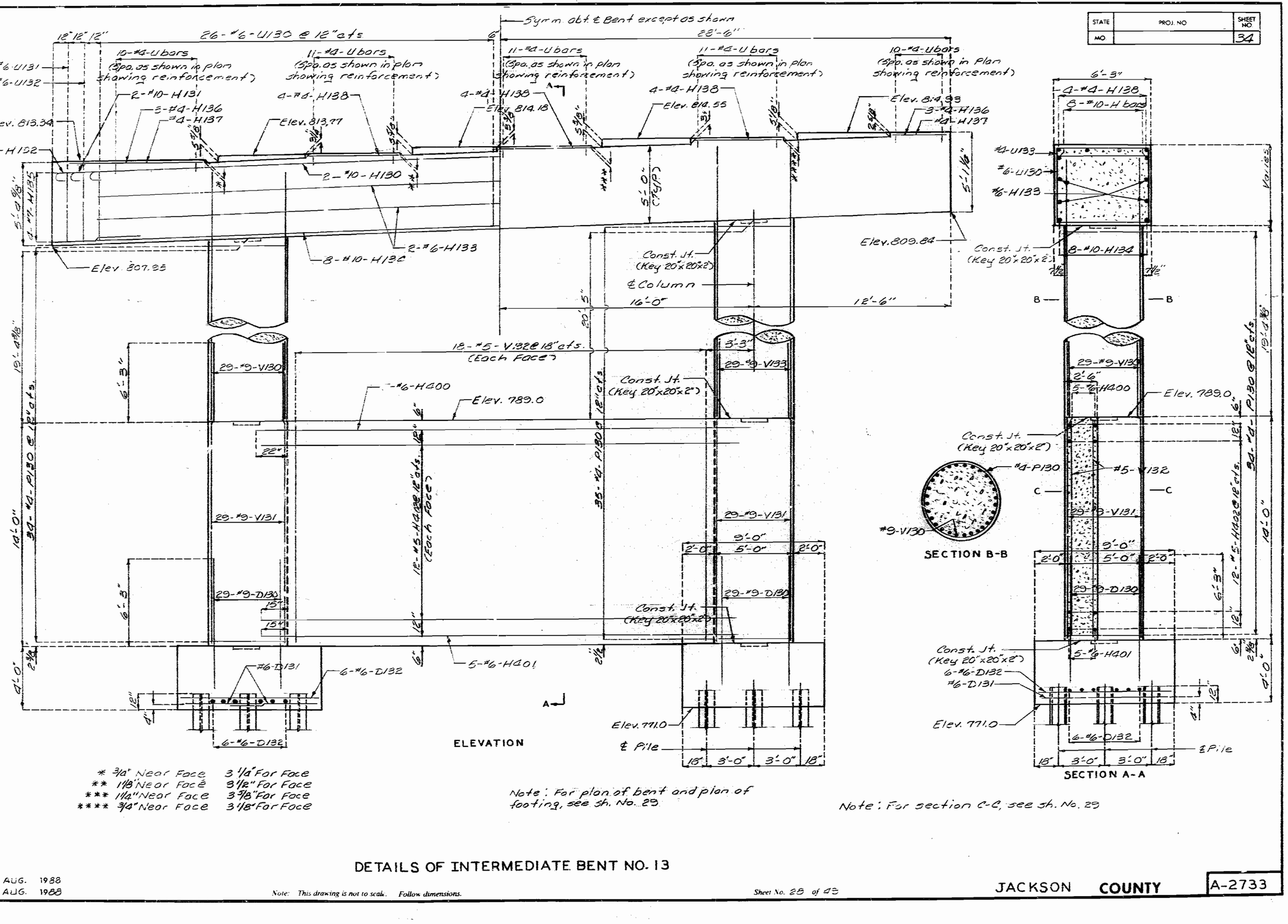

* 3/8" Near Face 3 1/8" For Face
** 1 1/8" Near Face 3 5/8" For Face
*** 1 1/4" Near Face 3 7/8" For Face
**** 3/4" Near Face 3 1/8" For Face

Note: For plan of bent and plan of footing, see Sh. No. 29

Note: For section C-C, see Sh. No. 29

DETAILS OF INTERMEDIATE BENT NO. 13

DETAILED AUG. 1988
CHECKED AUG. 1988

Note: This drawing is not to scale. Follow dimensions.

Sheet No. 25 of 43

JACKSON **COUNTY**

A-2733

135-000

STATE	PROJ. NO	SHEET NO.
MO.		35

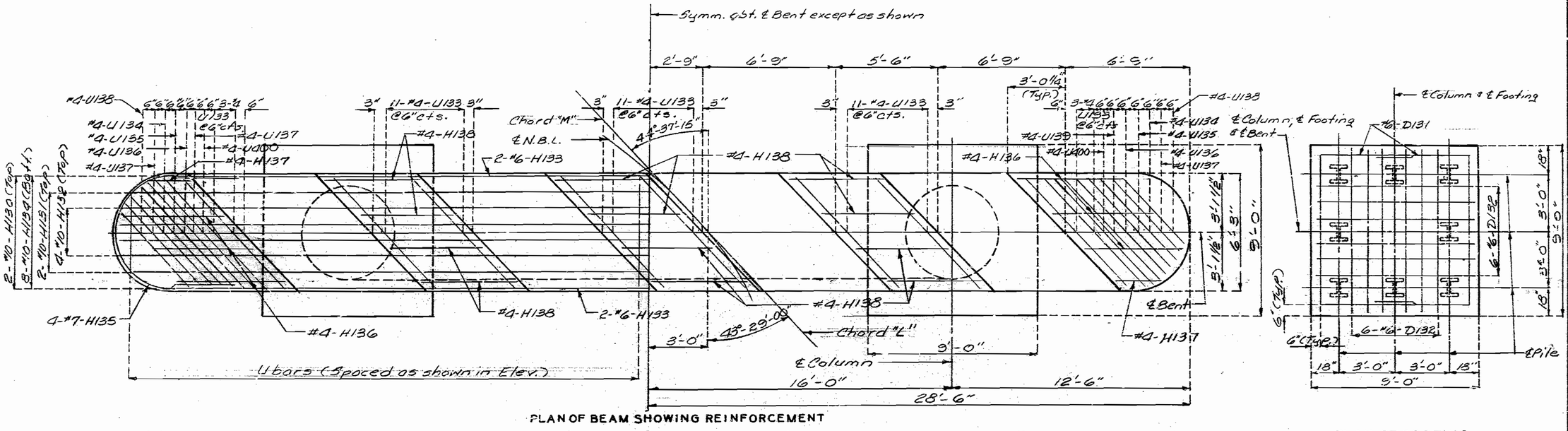

PLAN OF BEAM SHOWING REINFORCEMENT

PLAN OF FOOTING

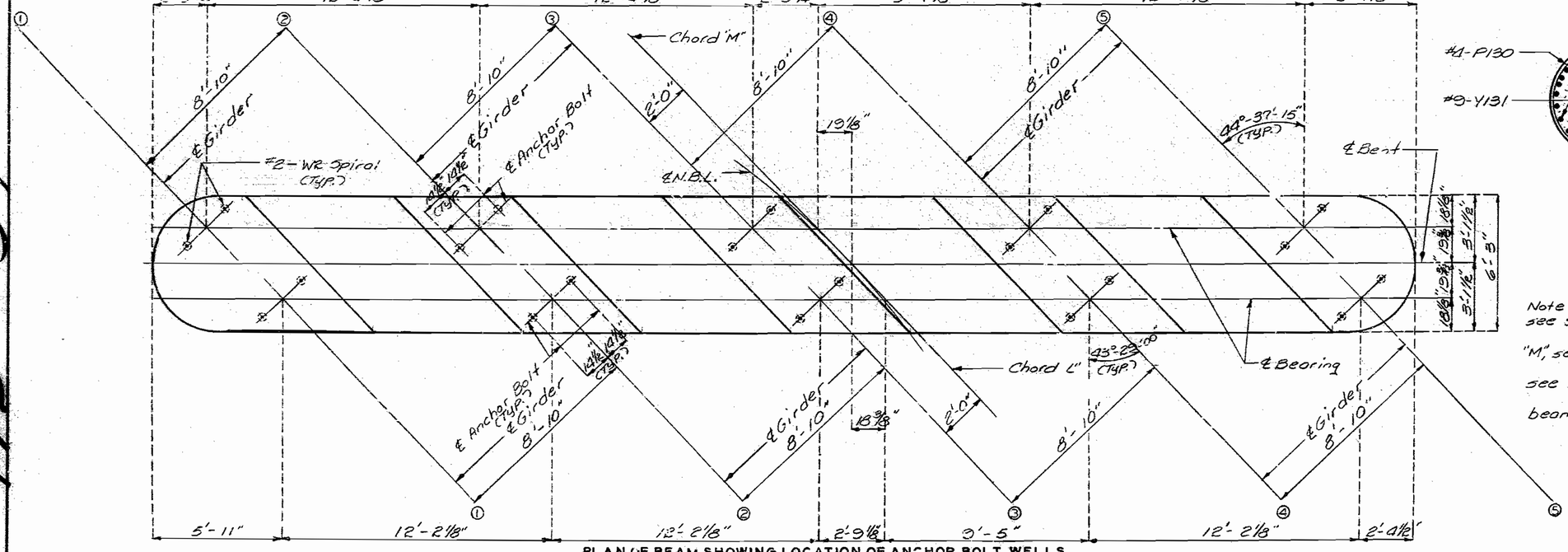

PLAN OF BEAM SHOWING LOCATION OF ANCHOR BOLT WELLS

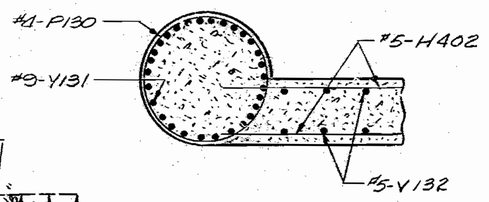

SECTION C-C

Note: For location of section C-C, see sh. No. 28
For location of Chords "L" and "M", see sh. No. 10
For detail of steel pile splice, see sh. No. 12
Place #4 hairpin bars in beam steps parallel to edge of steps.
All piles shall be HP12 x 53.

DETAILS OF INTERMEDIATE BENT NO. 13

DETAILED AUG. 1988
CHECKED AUG. 1988

Note: This drawing is not to scale. Follow dimensions.

JACKSON COUNTY A-2733

Note : For location of Chord "M" and "N" see Sheet No. 10.
For detail of key see Sheet No. 12.
All piles shall be HP10x42.
For detail of Steel Pile Splice see Sheet No. 12.

STATE	PROJ. NO.	SHEET NO.
MO.		30

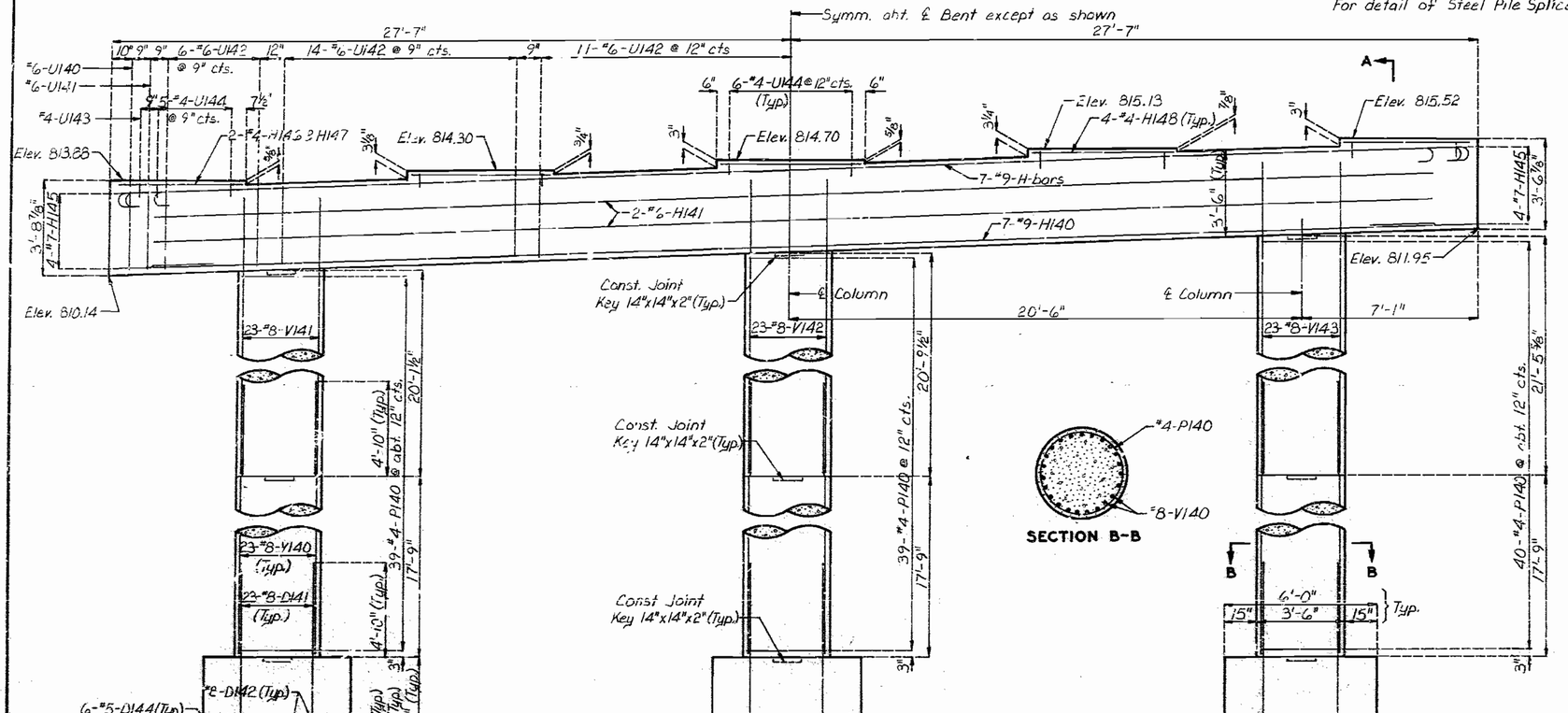

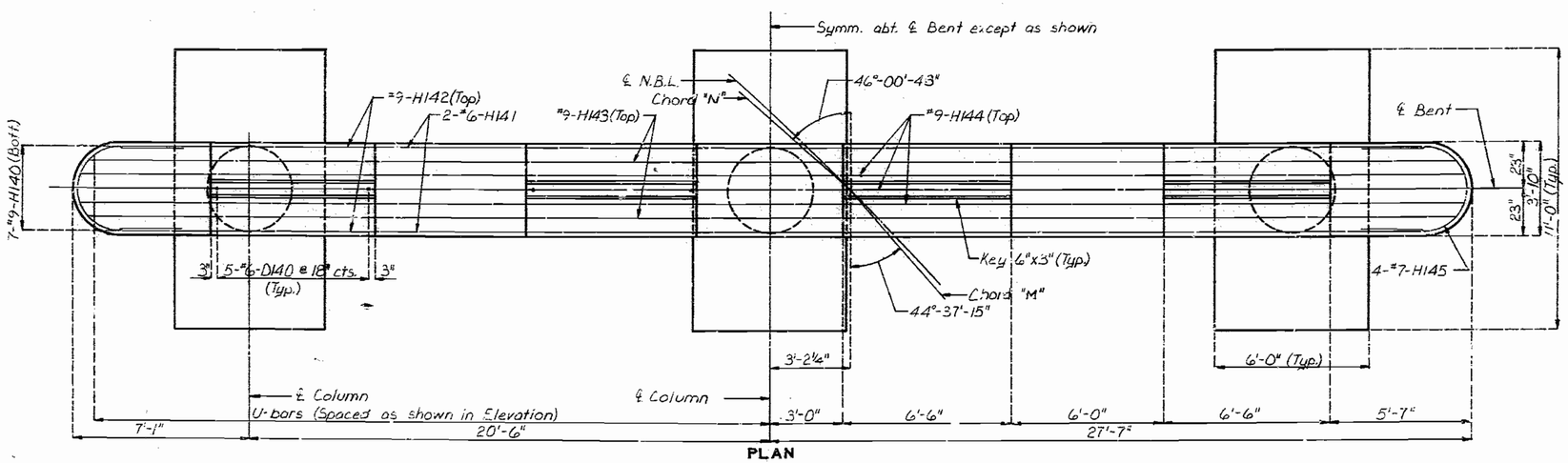

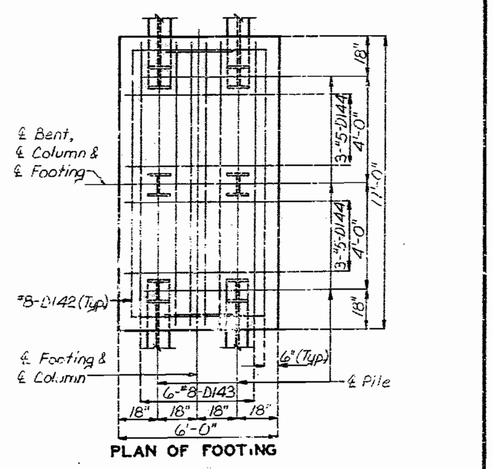

DETAILED July 1988
CHECKED AUG. 1988

DETAILS OF INTERMEDIATE BENT NO. 14

Note: This drawing is not to scale. Follow dimensions.

Sheet No. 30 of 49

JACKSON COUNTY

A-2733

Note : For location of chord "N" and "P" see Sheet No. 10 .
For detail of key see Sheet No. 14.
All piles shall be HP12 x 53.
For detail of Steel Pile Splice see Sheet No. 12 .

STATE	PROJ. NO.	SHEET NO.
MO.		37

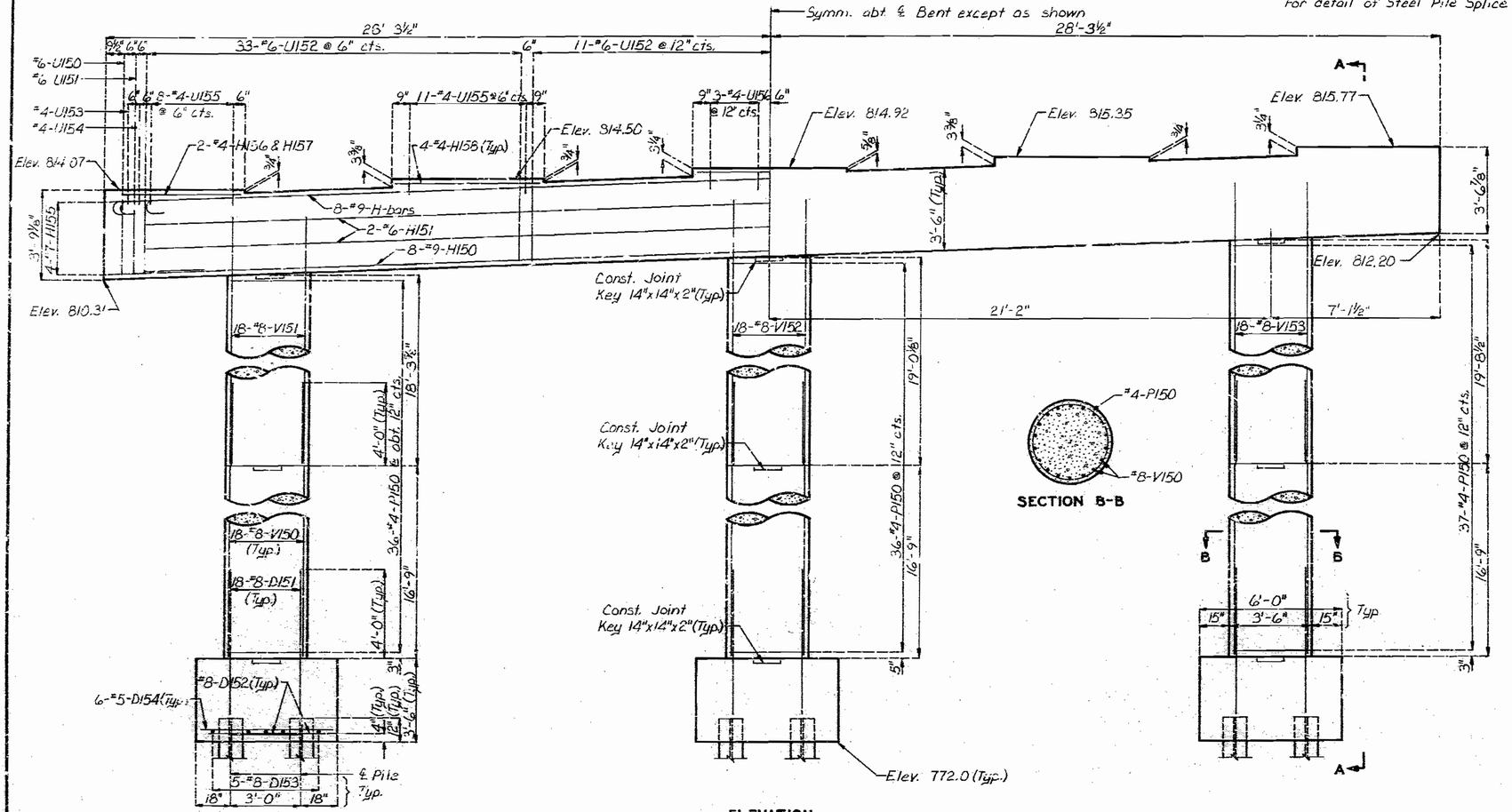

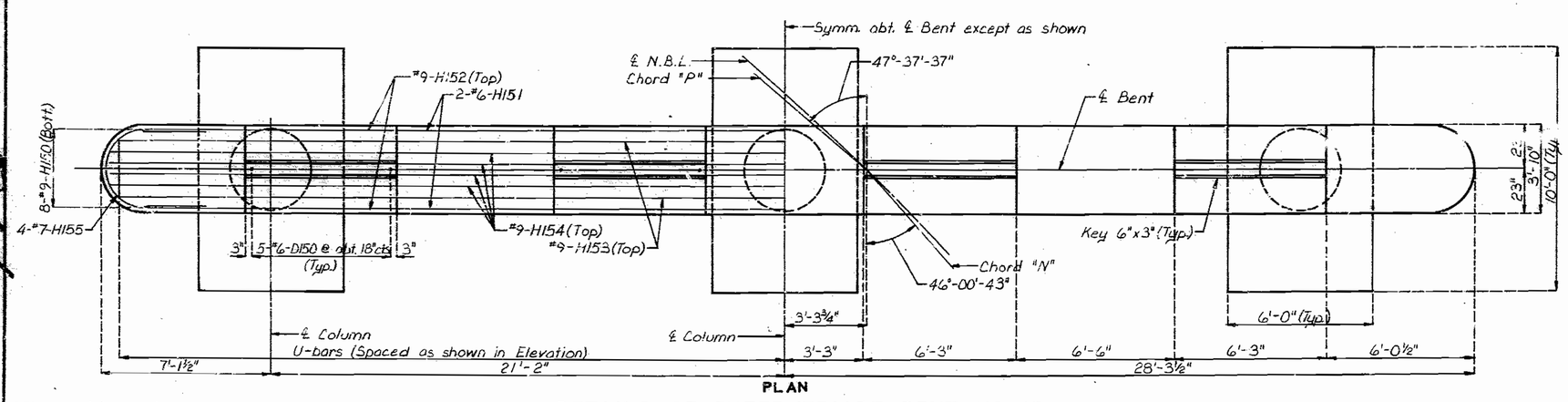

DETAILED July 1988
CHECKED Aug. 1988

DETAILS OF INTERMEDIATE BENT NO. 15

Note: This drawing is not to scale. Follow dimensions.

Sheet No. 31 of 49

JACKSON COUNTY

A-2733

178 283

STATE	PRO. NO.	SHEET NO.
MO.		33

Note : For location of Chord "P" and "Q" see Sheet No. 10.
For detail of key see Sheet No. 14.
All piles shall be HP10x42.
For detail of Steel Pile Splice see Sheet No. 12.

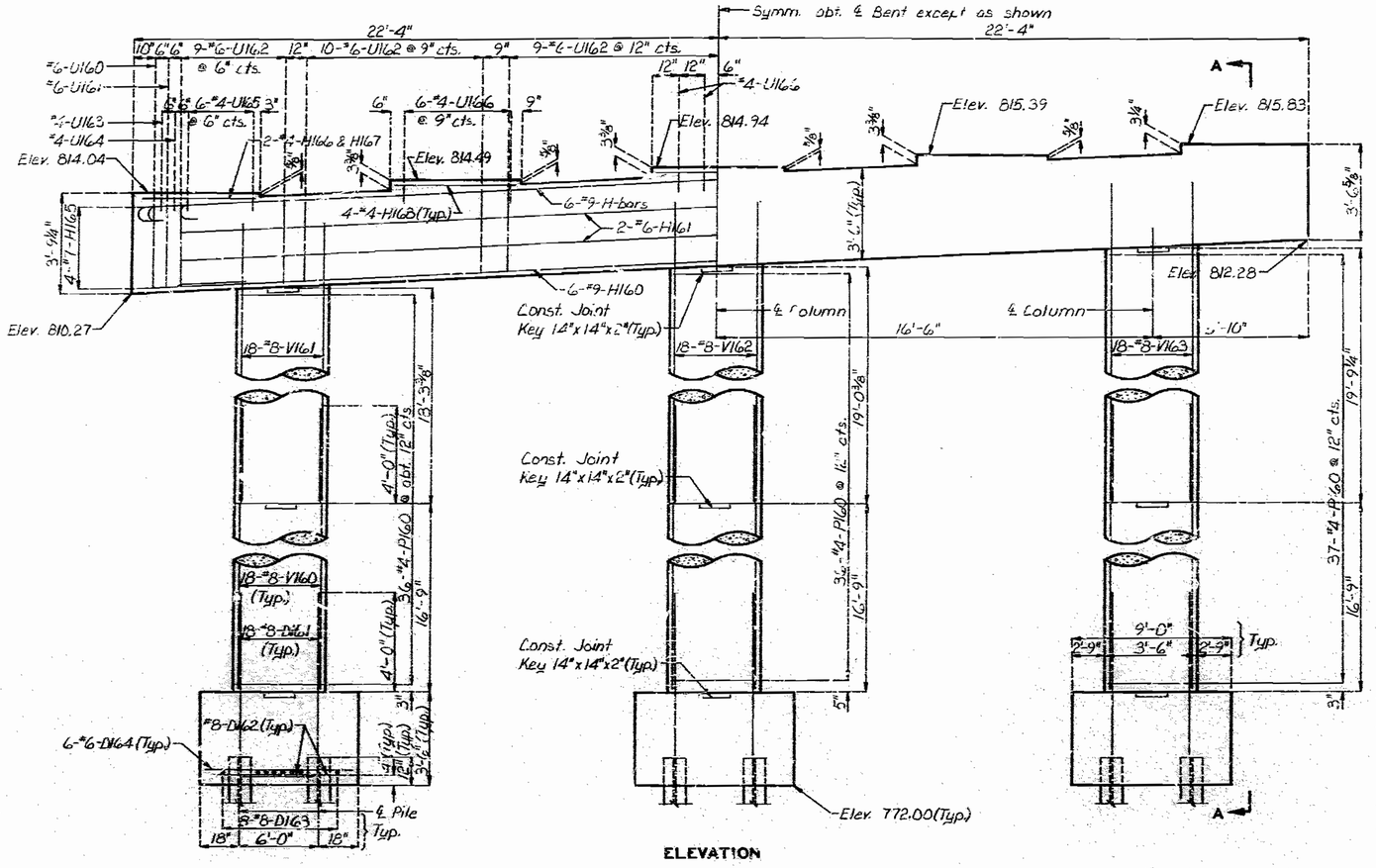

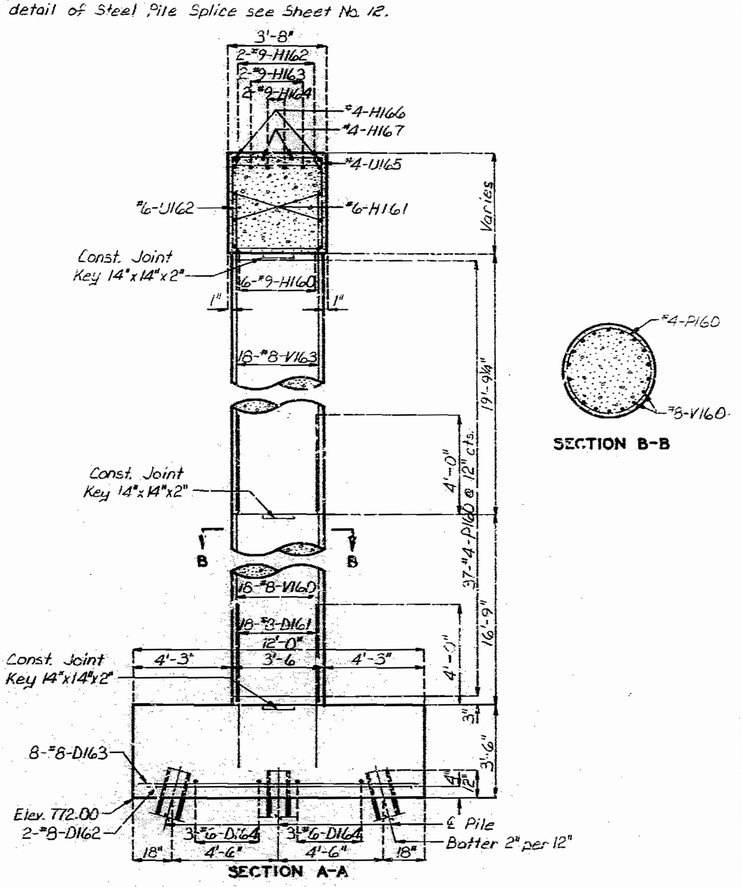

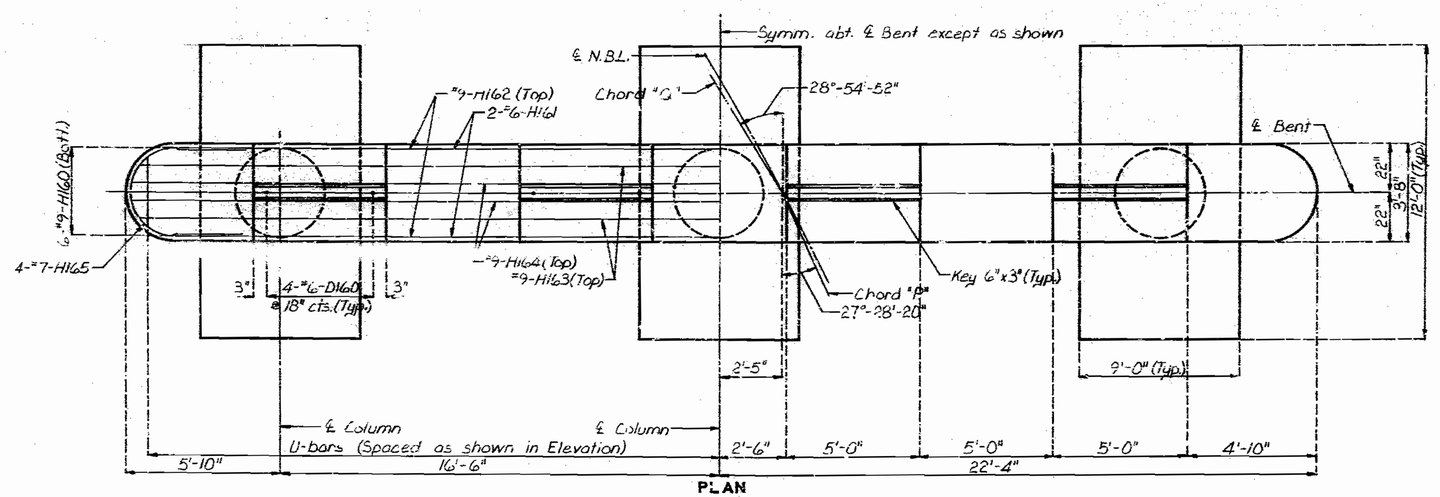

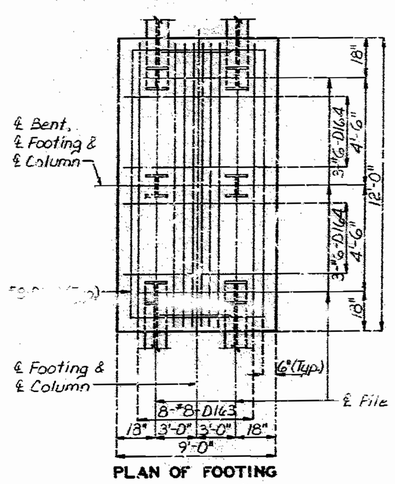

DETAILED July 1986
CHECKED Aug. 1988

DETAILS OF INTERMEDIATE BENT NO. 16

Note: This drawing is not to scale. Follow dimensions.

T2 28X

STATE	PROJ. NO.	SHEET NO.
MO.		39

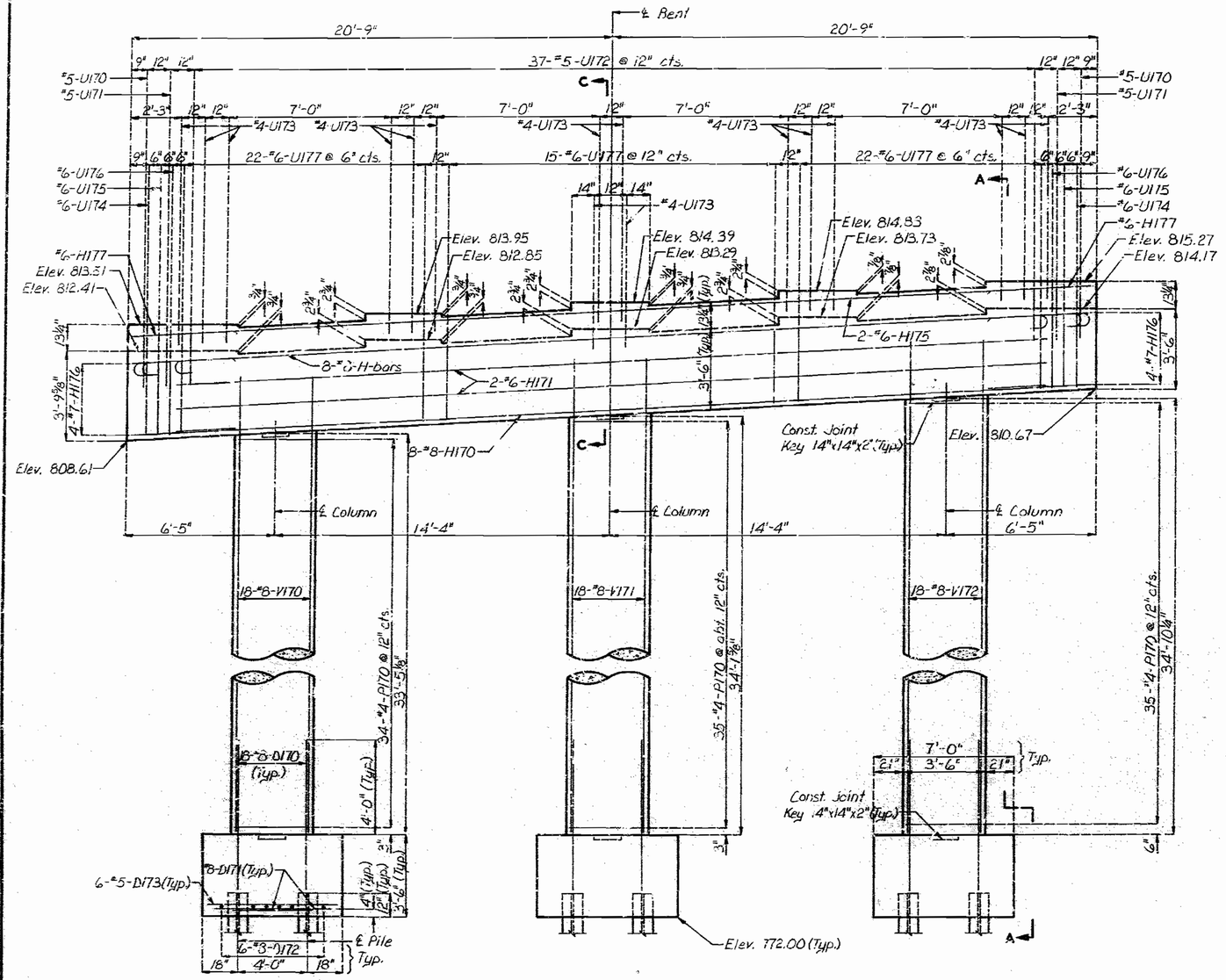

ELEVATION

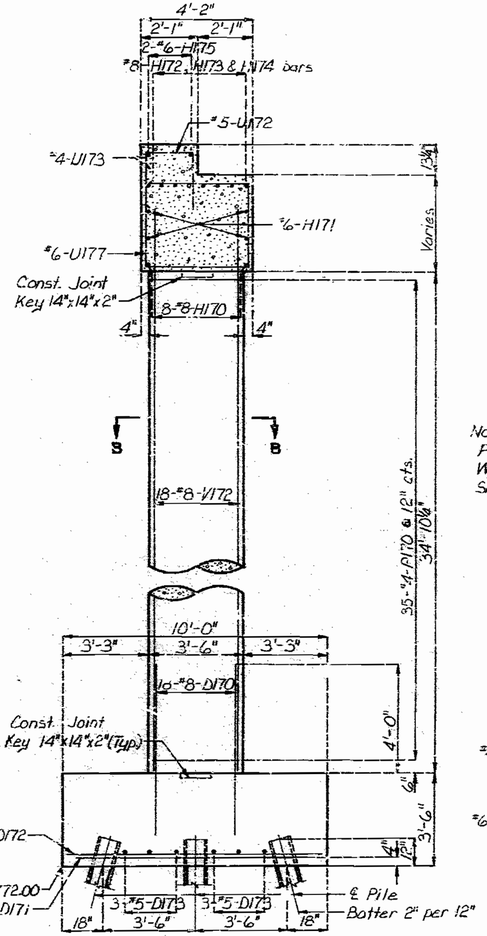

SECTION A-A

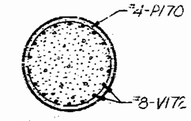

SECTION B-B

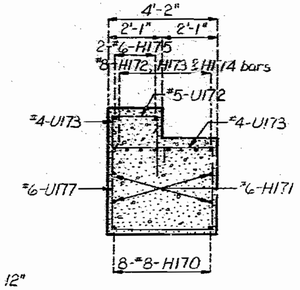

SECTION C-C

Note : For Plan Showing Reinforcement, Plan of Beam Showing Anchor Bolt Wells and Plan of Footing see Sheet No. 34.

DETAILS OF INTERMEDIATE BENT NO. 17

182-385

DETAILED July 1988
CHECKED Aug. 1988

Note: This drawing is not to scale. Follow dimensions.

STATE	PROJ. NO.	SHEET NO.
MO.		40

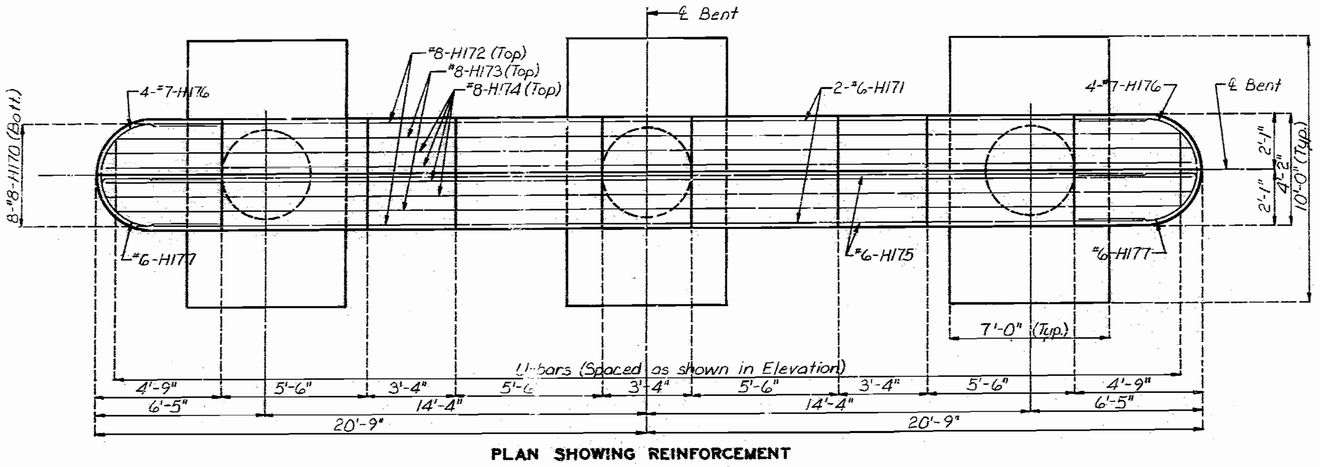

PLAN SHOWING REINFORCEMENT

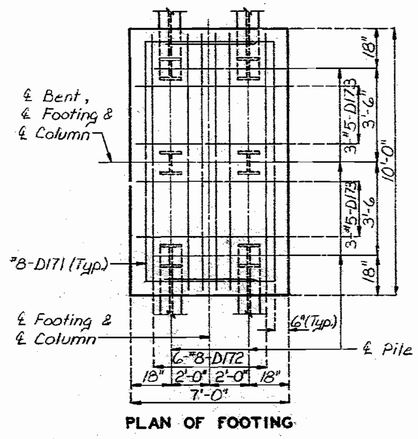

PLAN OF FOOTING

Note : For Plan Showing Bearing Alignment see Sheet No. 42.
For detail of anchor bolt wells see Sheet No. 42.
For location of Chord "Q" see Sheet No. 10.
For detail of Steel Pile Splice see Sheet No. 12.
All piles shall be HP10x42.

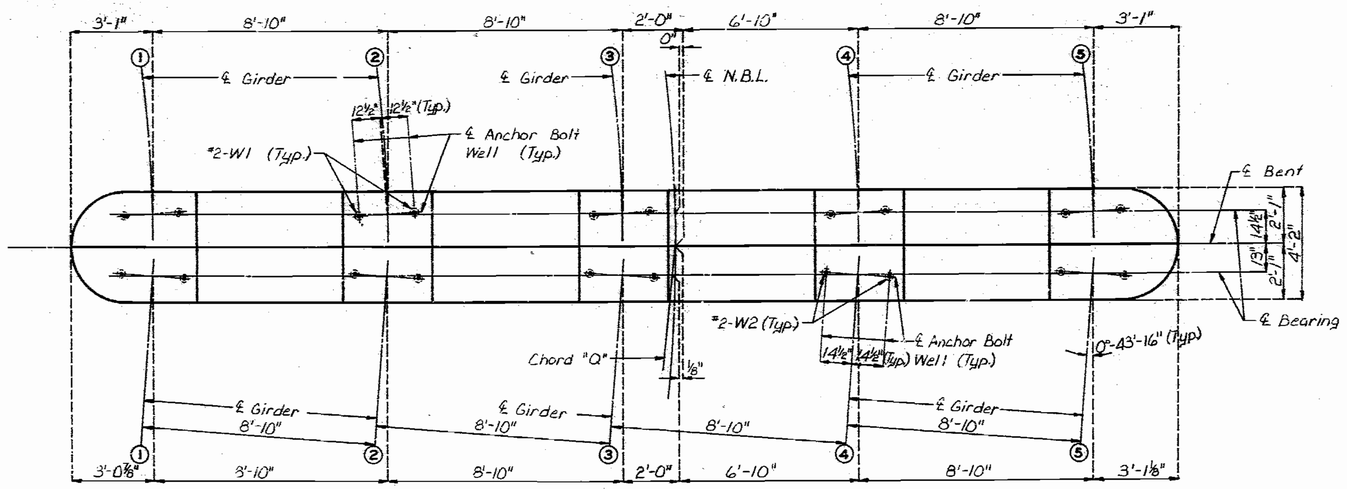

PLAN OF BEAM SHOWING
LOCATION OF ANCHOR BOLT WELLS

DETAILS OF INTERMEDIATE BENT NO. 17

DETAILED July 1988
CHECKED Aug. 1988

Note: This drawing is not to scale. Follow dimensions.

STATE	PROJ. NO.	SHEET NO.
MO.		41

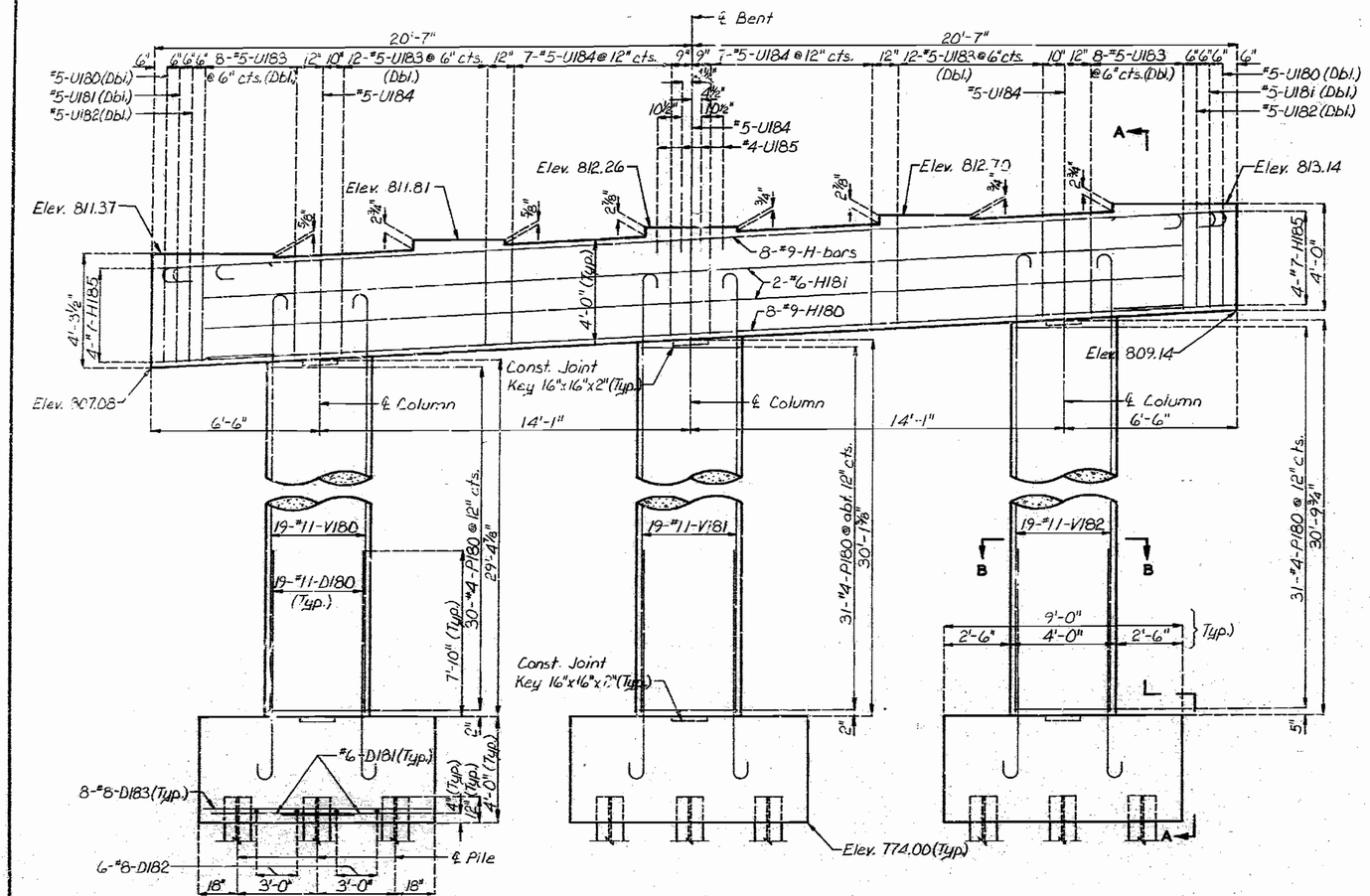

ELEVATION

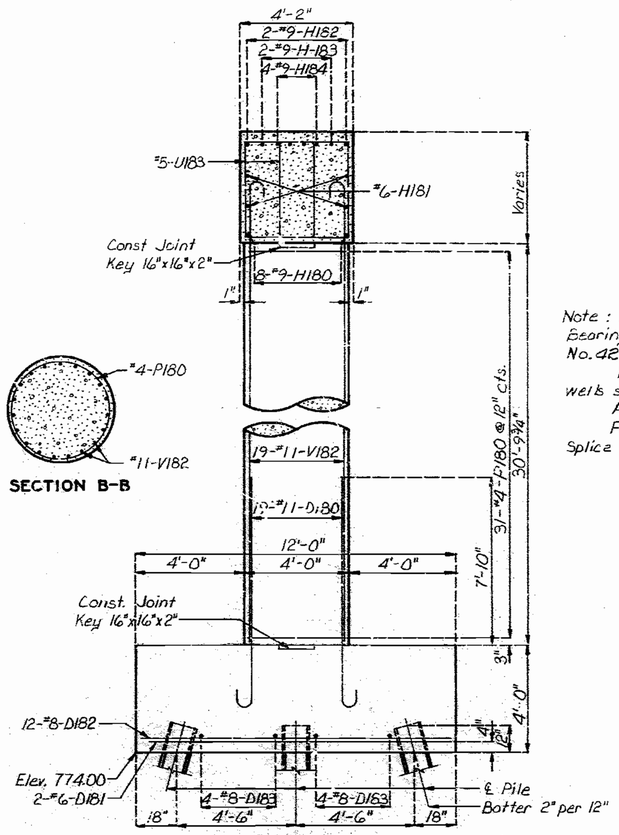

SECTION B-B

SECTION A-A

Note : For Plan Showing Bearing Alignment see Sheet No. 42.

For detail of anchor bolt wells see Sheet No. 42.

All piles shall be HP12x53.

For details of Steel Pile Splice see Sheet No. 12 .

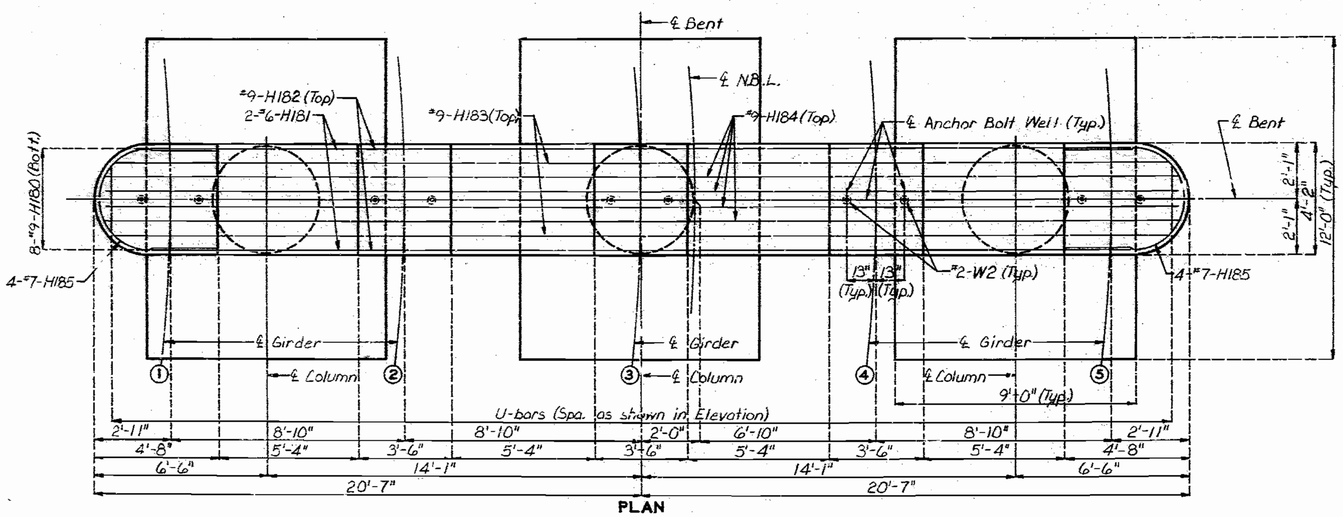

PLAN

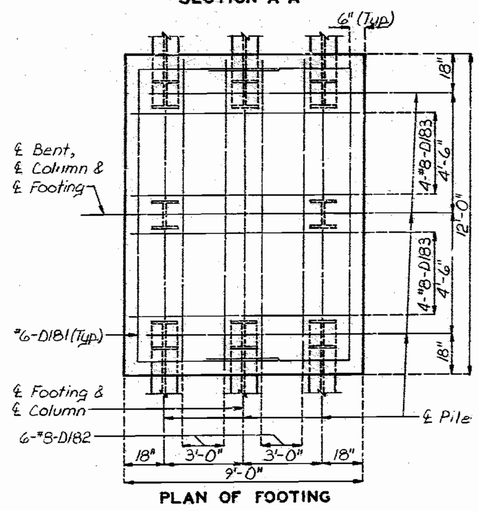

PLAN OF FOOTING

DETAILED July 1988
CHECKED Aug. 1988

DETAILS OF INTERMEDIATE BENT NO. 18

Note: This drawing is not to scale. Follow dimensions.

FOR INFORMATION ONLY

STATE	PROJ. NO.	SHEET NO.
MO.		42

Note : For Plan Showing Bearing Alignment see Sheet No. 42 .
For detail of anchor bolt wells see Sheet No. 42.
All piles shall be HP10 x 42.
For detail of Steel Pile Splice see Sheet No. 12 .

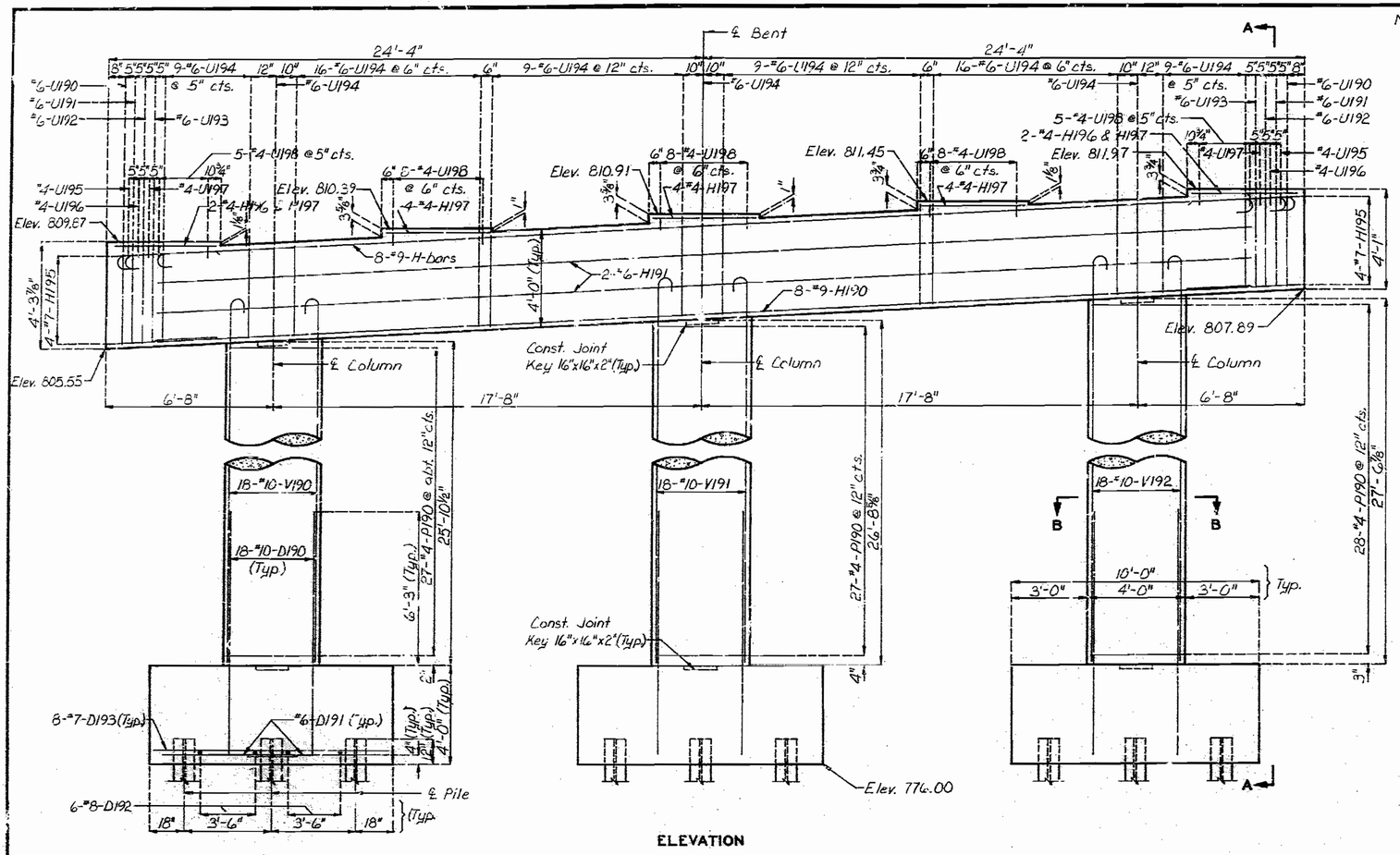

ELEVATION

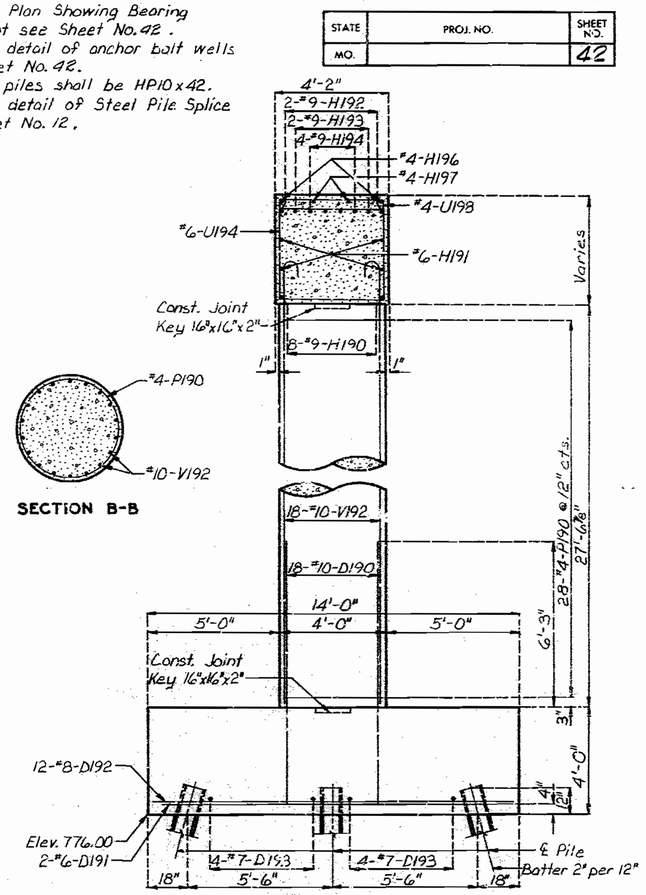

SECTION B-B

SECTION A-A

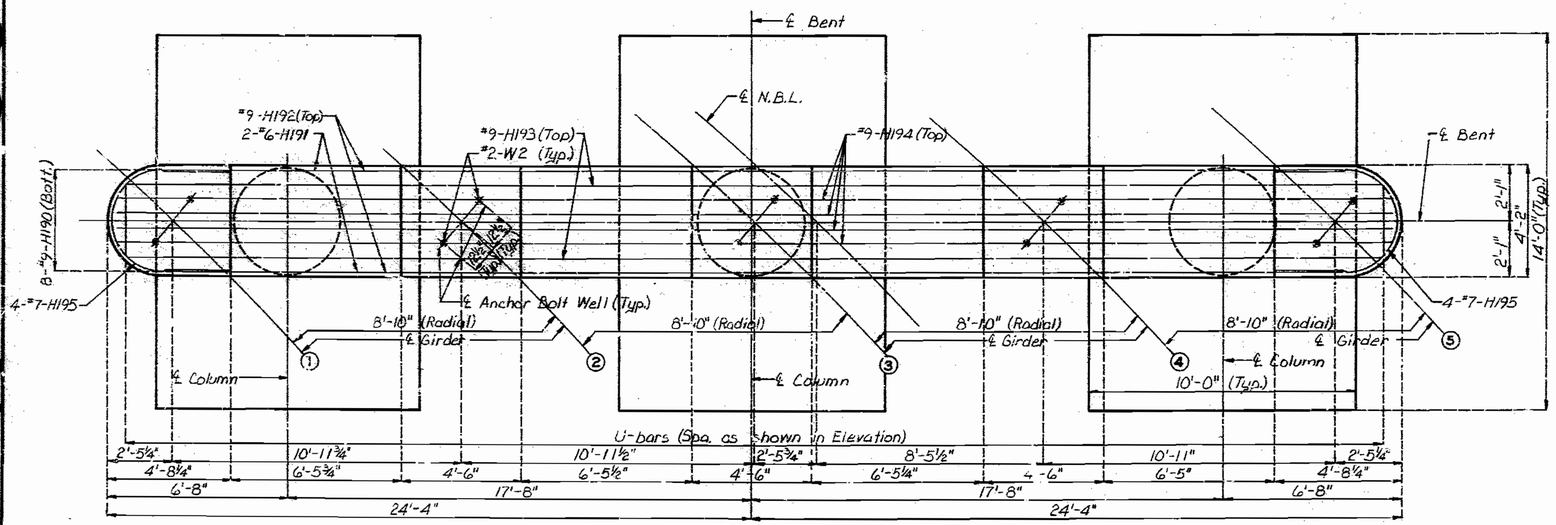

PLAN

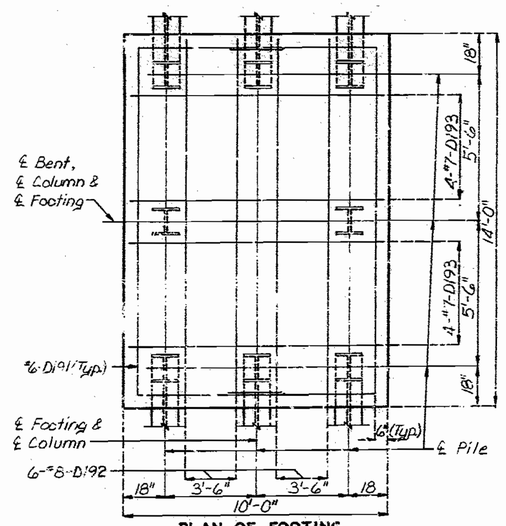

PLAN OF FOOTING

DETAILED July 1988
CHECKED Aug. 1988

DETAILS OF INTERMEDIATE BENT NO. 19

Note: This drawing is not to scale. Follow dimensions.

Sheet No. 36 of 43

JACKSON COUNTY

A-2733

18-2-2020

STATE	PROJ. NO.	SHEET NO.
MO.		43

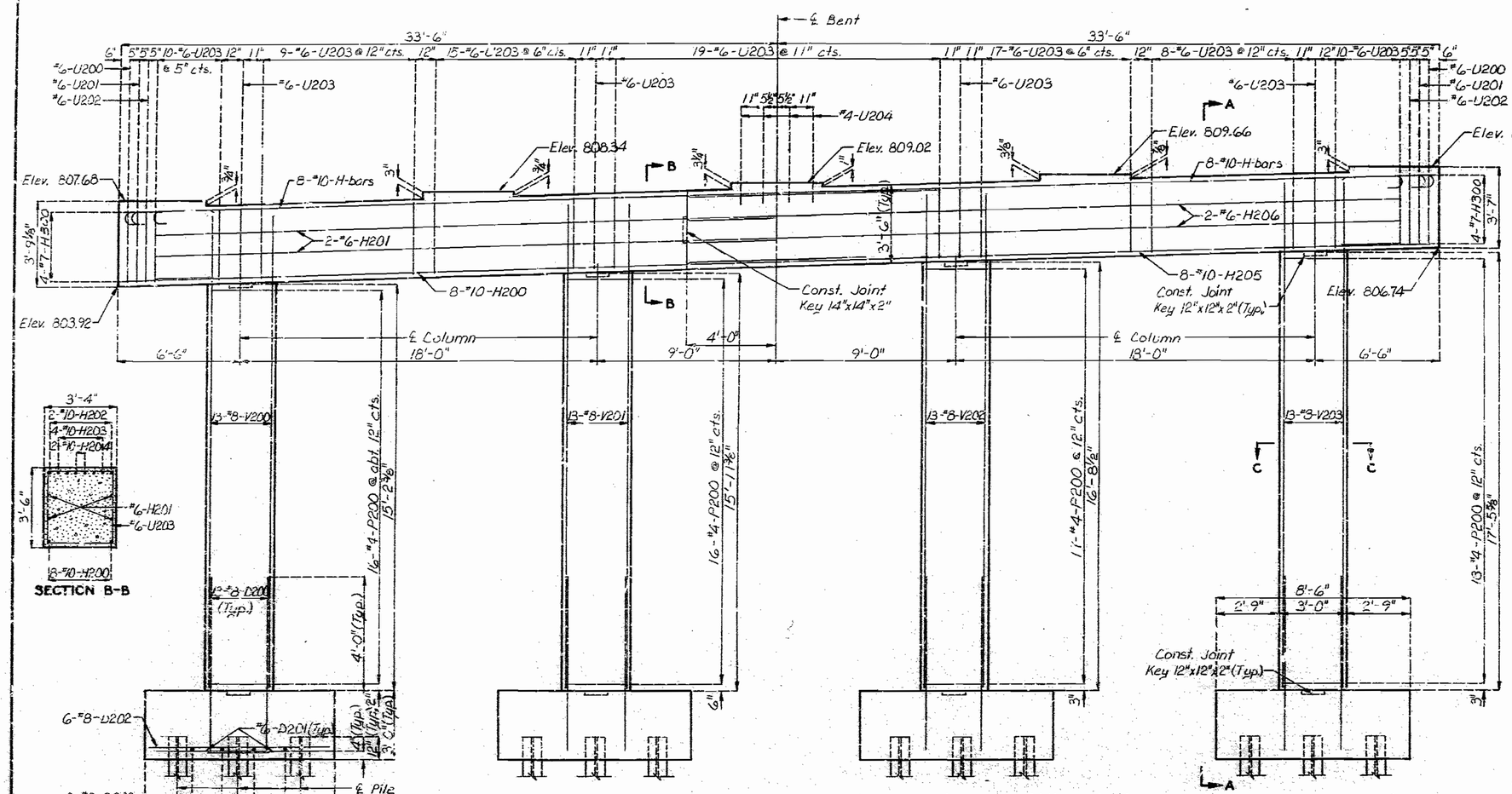

DETAILED June 1988
CHECKED Aug. 1988

DETAILS OF INTERMEDIATE BENT NO. 20

Note: This drawing is not to scale. Follow dimensions.

Sheet No. 37 of 49

JACKSON COUNTY

A-2733

STATE	PROJ. NO.	SHEET NO.
MO.		44

* See Earthquake Restrainers Sheet No. 42.

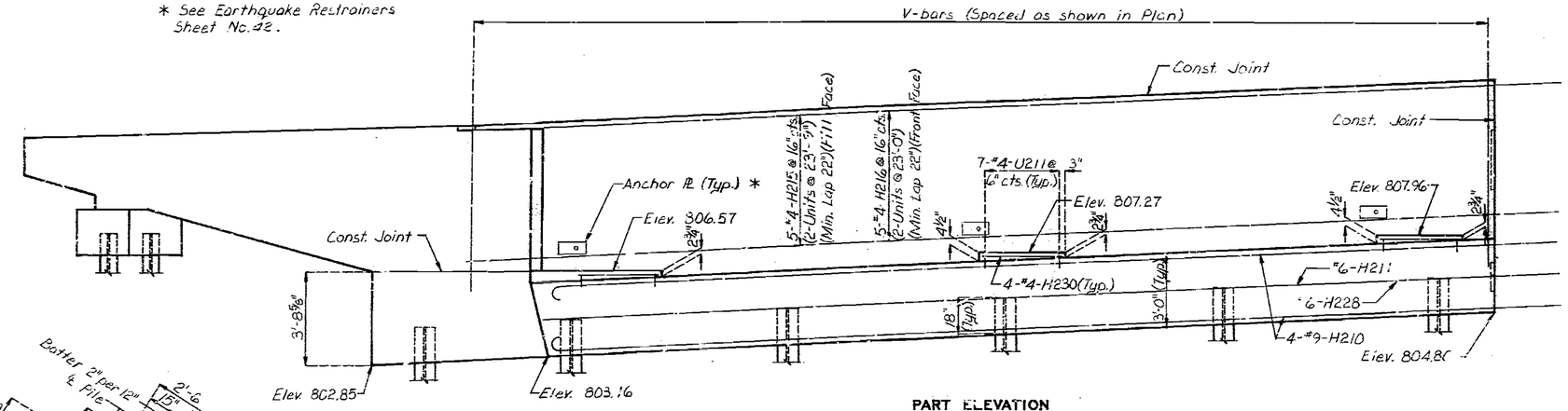

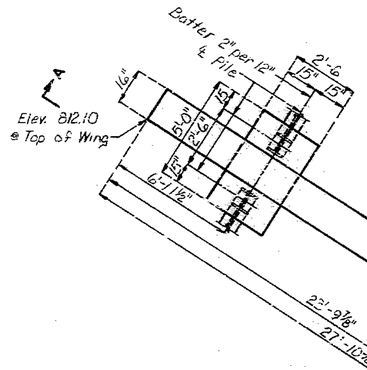

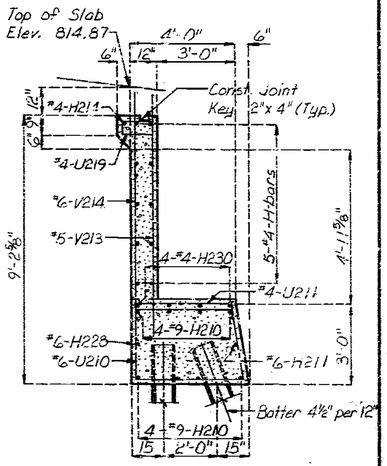

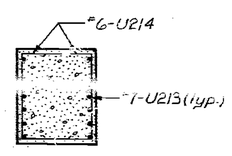

SECTION C-C

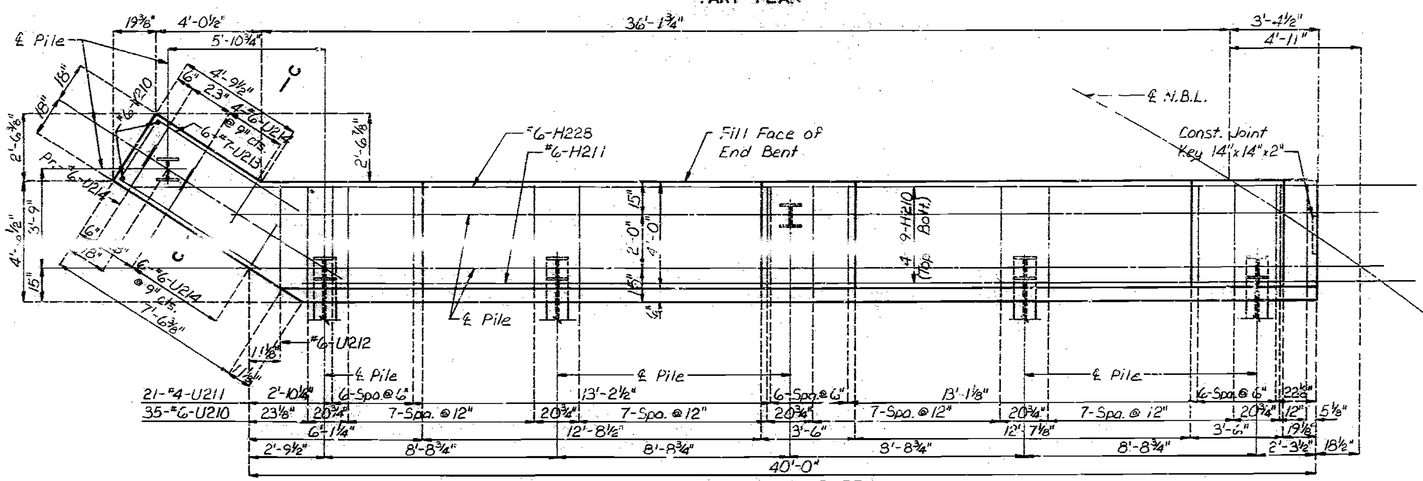

DETAILS OF END BENT NO. 21

Note : For Bearing Alignment see Sheet No. 42.
For Section Thru Wings and Elevation A-A see Sheet No. 40.
For detail of Steel Pile Splice see Sheet No. ?

For details of Deadman Anchorage System see Sheet No. 41.
For details of Anchor Bolt Well see Sheet No. 42.
For details of Earthquake Restrainers see Sheet No. 42.

Piles in beam shall be HP12x53.
Piles under wing shall be HP 10 x 42.

DETAILED June 1988
CHECKED Aug. 1988

Note: This drawing is not to scale. Follow dimensions.

JACKSON COUNTY

A-2733

STATE	PROJ. NO.	SHEET NO.
MO.		45

* See Earthquake Restrainers Sheet No. 42.

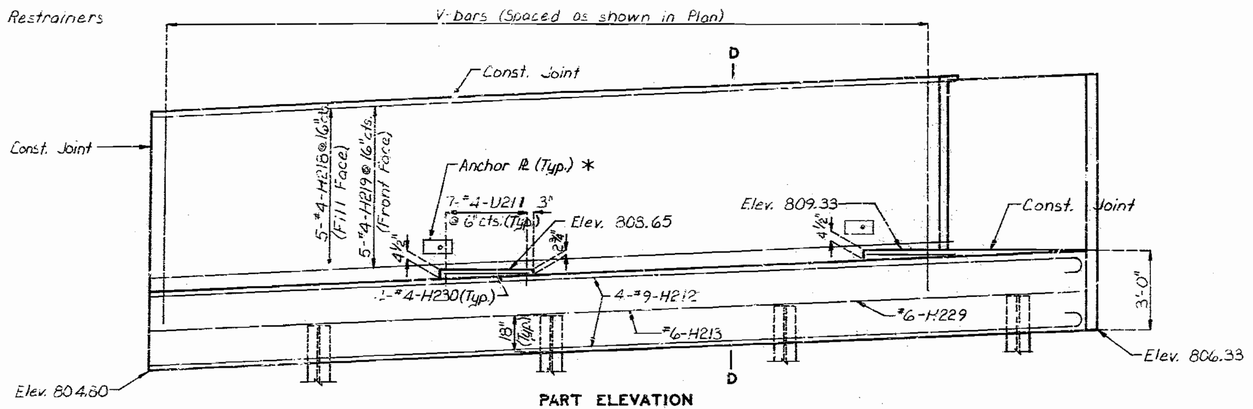

PART ELEVATION

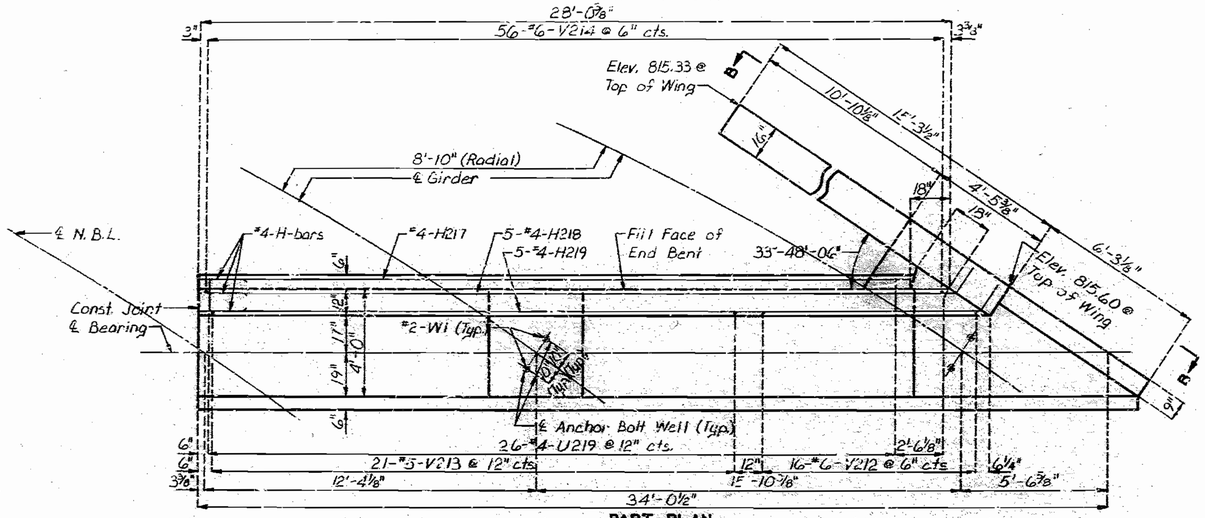

PART PLAN

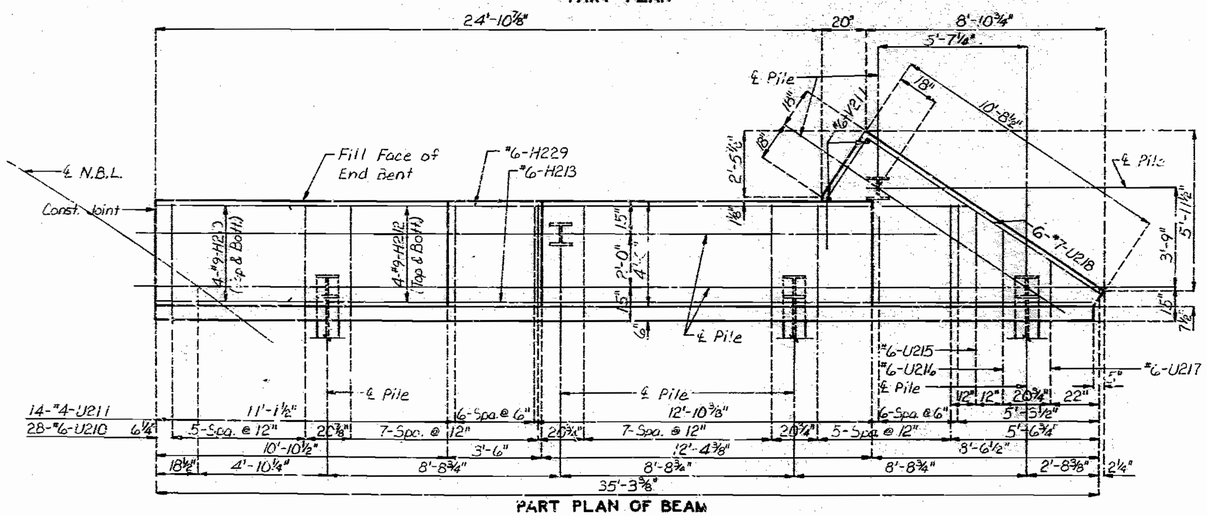

PART PLAN OF BEAM

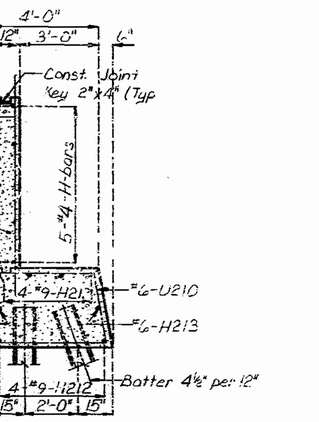

SECTION D-D

Note : For Section Thru Wings and Elevation B-B see Sheet No. 40.

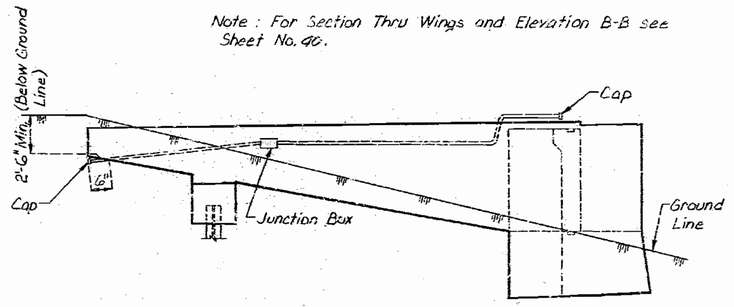

ELEVATION OF LEFT WING SHOWING CONDUIT SYSTEM

Note : All conduit shall be rigid non-metalic Schedule 40 heavy wall PVC (Polyvinyl Chloride Plastic) with 3" minimum cover in the concrete. Each section of conduit shall bear the Underwriters' Laboratories, Inc., (UL) label.

Shift reinforcing steel in field where necessary to clear conduit and junction box.

End bent junction box shall be PVC molded flush surface mounted and equal to Carlon Electrical Construction Products or Triangle Conduit and Cable Company, Inc. The conduit terminations may be permanent or separable. The terminations and covers shall be of watertight construction.

Weepholes shall be provided at appropriate locations to drain any moisture in the conduit lines.

Cost of furnishing and installing conduit system shall be included in price bid for Class B concrete.

DETAILED June 1988
CHECKED Aug. 1988

Note: This drawing is not to scale. Follow dimensions

DETAILS OF END BENT NO. 21

Sheet No. 39 of 49

JACKSON COUNTY

A-2733

STATE	PROJ. NO.	SHEET NO.
MO.		46

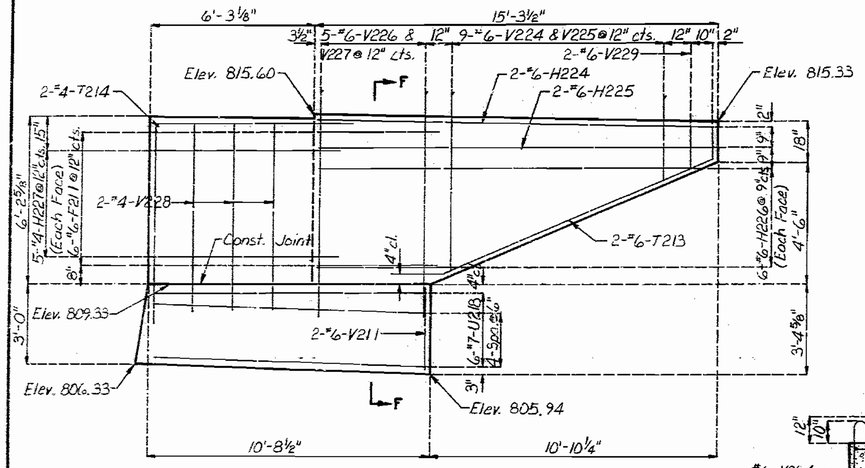

ELEVATION B-B

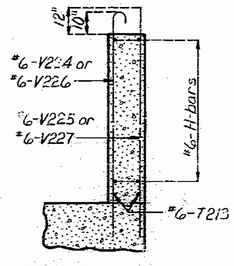

SECTION F-F

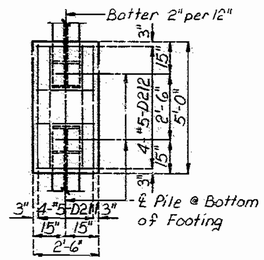

PLAN OF WING FOOTING

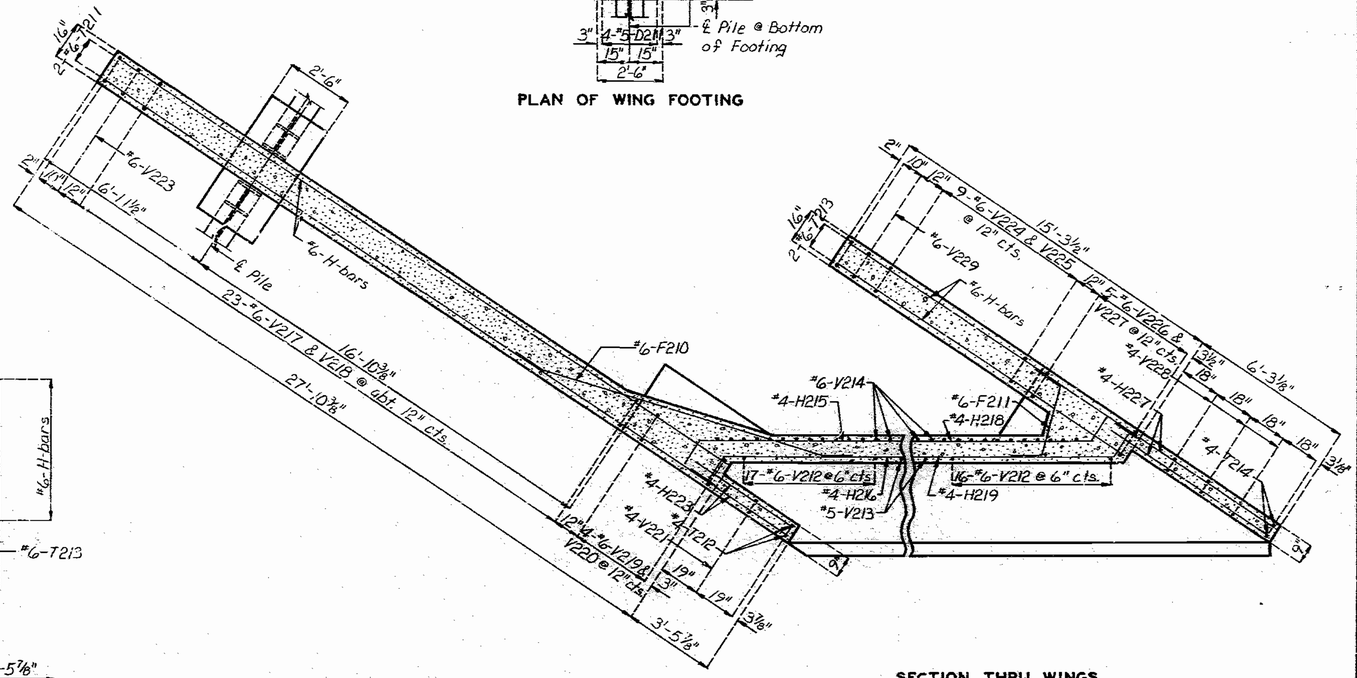

SECTION THRU WINGS

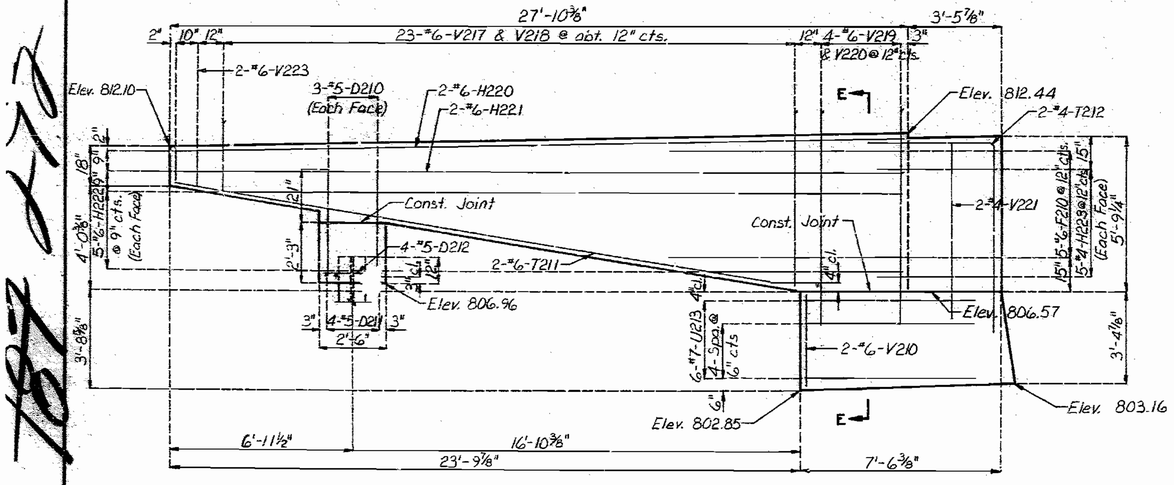

ELEVATION A-A

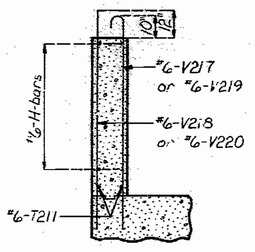

SECTION E-E

Note : Field bending shall be required at wings for #4-H215, #4-H216, #4-H218 & #4-H219 bars in backwall and for #6-F210 & #6-F-211 bar when necessary to conform to slope of wing.

DETAILS OF END BENT NO. 21

DETAILED June 1988
CHECKED Aug. 1988

Note: This drawing is not to scale. Follow dimensions.

STATE	PROJ. NO.	SHEET NO.
MO.		47

NOTES:

CONSTRUCTION SEQUENCE:

CONSTRUCT END BENT WITH ANCHOR TEES IN PLACE.

MACHINE COMPACT FILL UP TO ELEVATION OF 1"ø ROD AND TURNBUCKLE.

CONSTRUCT DEADMAN WITH ANCHOR TEES IN PLACE.

INSTALL 1"ø ROD, CLEVIS AND TURNBUCKLE ASSEMBLY.

TIGHTEN TURNBUCKLE UNTIL SNUG.

HAND COMPACT FILL FOR 12" (MIN.) OVER 1"ø ROD AND TURNBUCKLE.

MACHINE COMPACT REMAINING FILL.

BILL OF REINFORCING STEEL EACH DEADMAN		
NUMBER	SIZE & MARK	LENGTH
8	4H301	31'-8"
128	4V301	20"

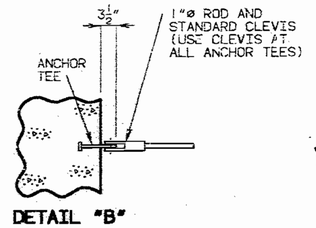

DETAIL "B"

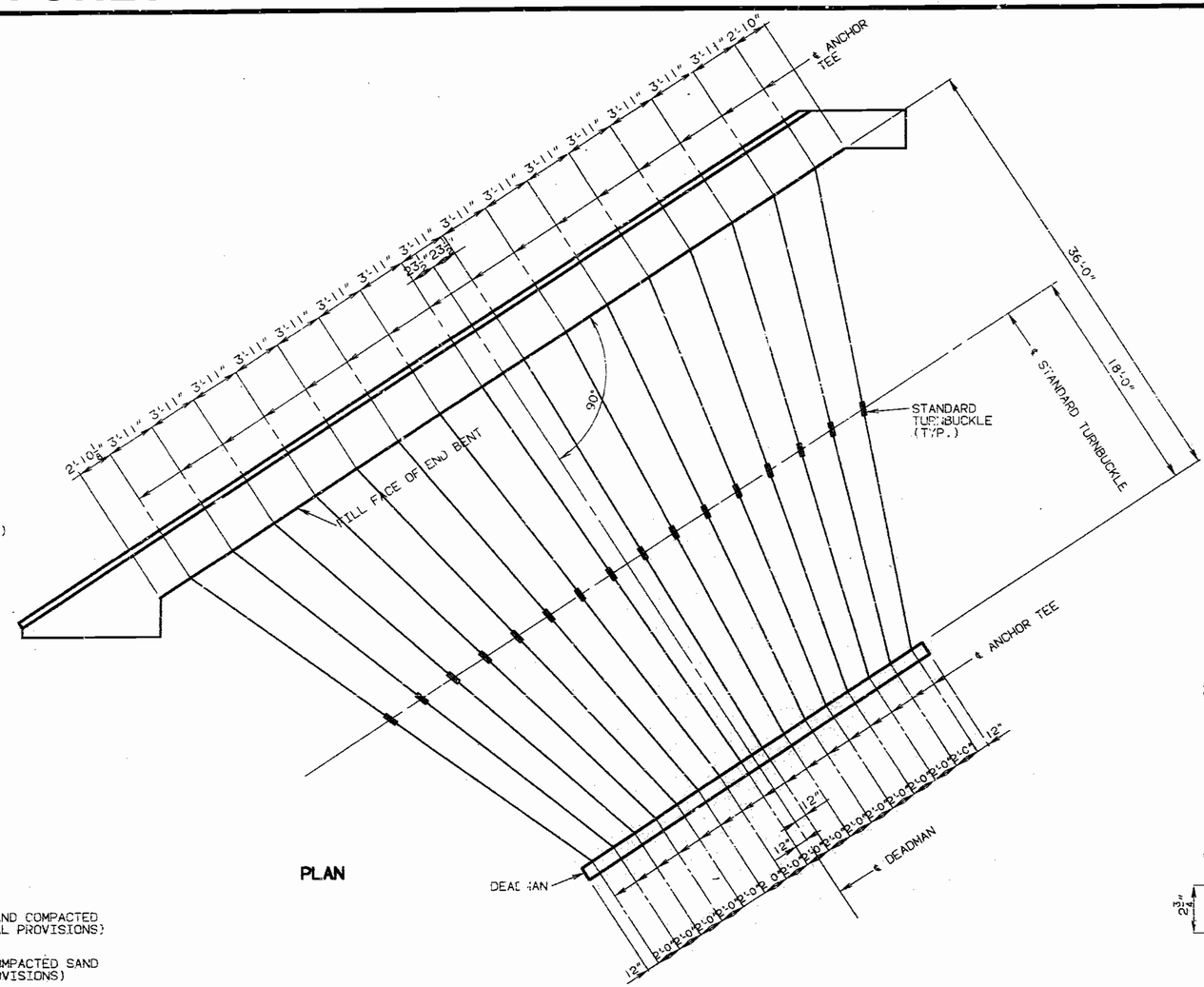

PLAN

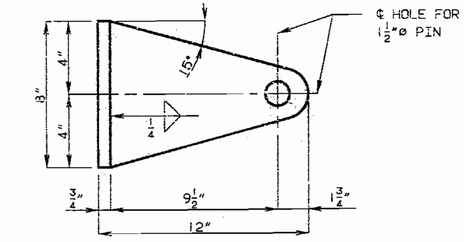

ELEVATION

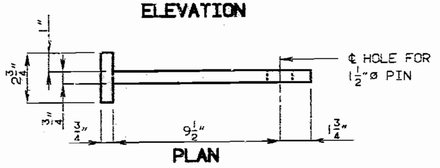

PLAN

DETAIL OF ANCHOR TEE

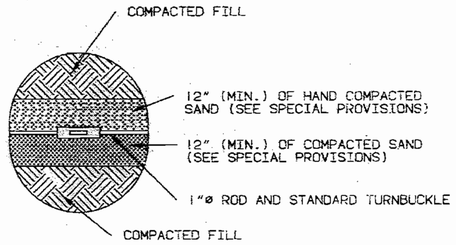

DETAIL "C"

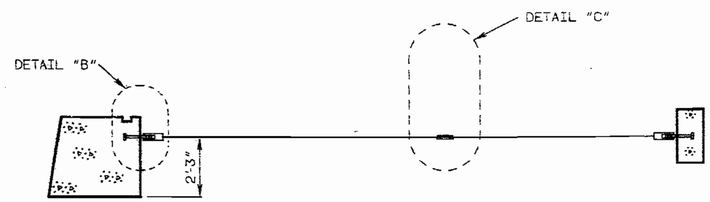

LOCATION OF ANCHOR TEE

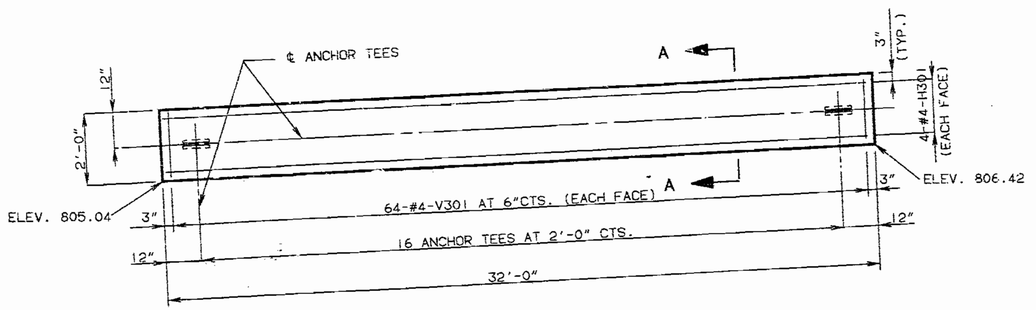

ELEVATION OF DEADMAN

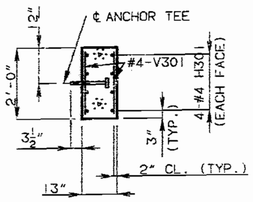

SECTION A-A

STD. D.M.A.	REVISED
JULY 1984	JULY 1988

DETAILED AUG. 1988
CHECKED AUG. 1988

DETAILS OF DEADMAN ANCHORAGE SYSTEM - BENT 21

NOTE: THIS DRAWING IS NOT TO SCALE. FOLLOW DIMENSIONS.

SHEET NO. 41 OF 49

JACKSON COUNTY

A-2733

188 323

STATE	PROJ. NO.	SHEET NO.
MO.		48

Girder No.	①	②
1	144°-51'-15"	K-K
2	144°-38'-55"	L-L
3	144°-26'-45"	M-M
4	144°-14'-43"	N-N
5	144°-02'-49"	O-O

Note : The earthquake restraint assemblies shall be galvanized after fabrication in accordance with ASTM A123. The threads shall be protected during galvanizing.

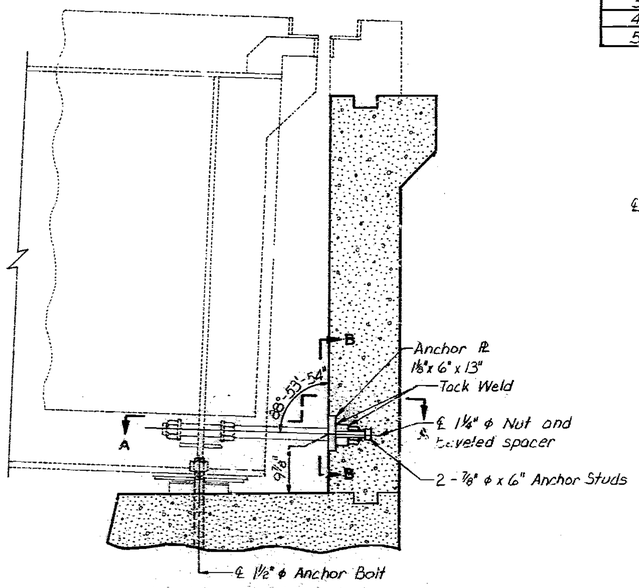

PART SECTION NEAR GIRDER AT END BENT NO. 21

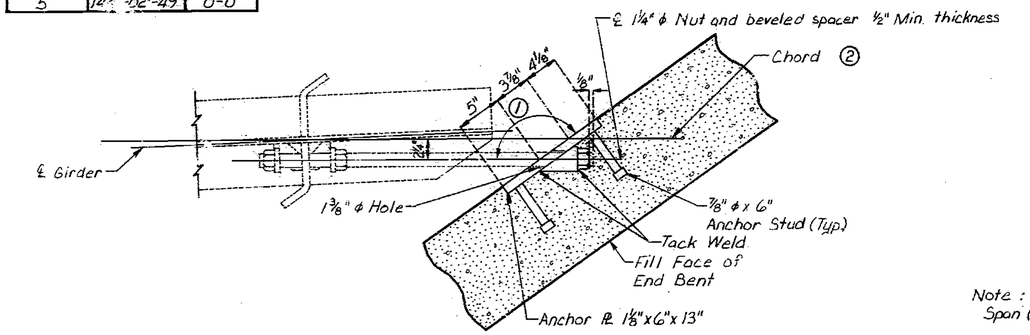

SECTION A-A

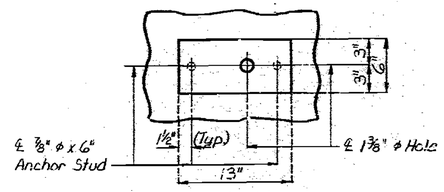

SECTION B-B

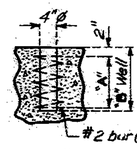

DETAIL OF ANCHOR BOLT WELLS

TABLE OF DIMENSIONS			
BENTS	17, 20 & 21	4, 13, 17, 18 & 19	8
"A"	15"	18"	25"
"B"	18"	21"	28"

Note : Bent #17 Span (16-17) "A"= 18" "B"= 21
Span (17-18) "A"= 15" "B"= 18"

GENERAL NOTES :

A temporary threaded plug shall be inserted into each embedded hex nut in the backwall at End Bent No. 21 before concrete is poured. Plugs shall extend ⅛" into backwall concrete as shown in Section A-A. This temporary plug shall remain in place until installation of threaded rods by future contract.

Studs shall be in accordance with Sec. 1037.

Payment for anchor plates, nuts and spacers is included in price bid for Class B Concrete.

Anchor plates shall be A-36 steel.

Note: Light dashed lines indicate future contract construction

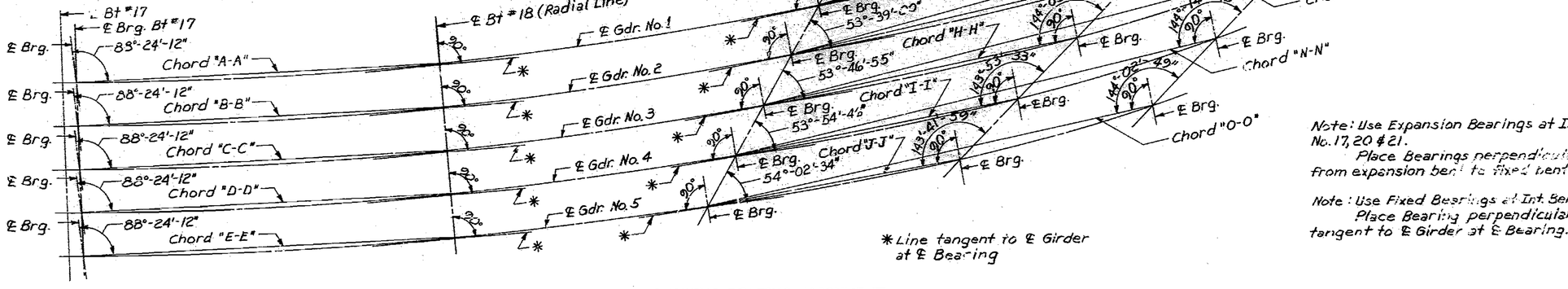

* Line tangent to ℄ Girder at ℄ Bearing

Note: Use Expansion Bearings at Int. Bents No. 17, 20 & 21.
Place Bearings perpendicular to chord from expansion bent to fixed bent as shown.

Note : Use Fixed Bearings at Int. Bents No. 18 & 19.
Place Bearing perpendicular to a line tangent to ℄ Girder at ℄ Bearing.

DETAILS OF EARTHQUAKE RESTRAINERS

PLAN SHOWING BEARING ALIGNMENT
(PLATE GIRDER SPANS)

FOR INFORMATION ONLY

A27331, Sht. 54

COMPLETE BILL OF REINFORCING STEEL

NO. REQD.	MARK NO. SIZE	MARK NO. MARK	LOCATION	EPOXY (E)	SHAPE NO.	STIRRUP (S)	SUBSTR. (X)	VARIES (V)	NO. EACH	DIMENSIONS B FT.	B IN.	C FT.	C IN.	D FT.	D IN.	E FT.	E IN.	F FT.	F IN.	H FT.	H IN.	K FT.	K IN.	NOMINAL LENGTH FT.	NOMINAL LENGTH IN.	ACTUAL LENGTH FT.	ACTUAL LENGTH IN.	WEIGHT LBS.
	-		SUBSTRUCTURE																									
			END BT.NO 1																									
2	6F1		WING BRACE		15		X			14.250	3	1.000		14.250		11.000		9.000		11.000		9.000		6	4	6	2	19
2	6F2		WING BRACE		15		X			14.250	4	9.000		14.250		9.000		11.000		9.000		11.000		7	2	7	1	21
4	6M1		BEAM		20		X	Y	1	4	2.000													4	2	4	2	
			INCR = 2.375 IN							4	9.000													4	9	4	9	27
4	6M2		BEAM		20		X			22	3.000													22	3	22	3	134
4	6M3		BEAM		20		X			23	0.000													23	0	23	0	138
6	6M4		BEAM		20		X			42	2.000													42	2	42	2	380
3	6M5		WING		20		X	Y	2	4	3.000													4	3	4	3	
			INCR = 21.000 IN							9	6.000													9	6	9	6	83
8	6M6		WING		20		X	W	2	4	0.000													4	0	4	0	
			INCR = 21.625 IN							9	5.000													9	5	9	5	81
2	6T1		WING		15		X			3	4.750	9	9.000							16.000		3	1.500	13	2	13	2	40
2	6T2		WING		15		X			3	4.875	8	9.500							14.500		3	2.250	12	2	12	2	37
14	5W1		BEAM		10	S	X					5	4.000	2	3.625									13	0	12	9	186
14	5W2		BEAM		10	S	X					4	10.000	2	3.625									12	0	11	9	172
9	4W3		BEAM		13	S	X			2	3.625	3	0.625	2	3.625	3	0.625							11	6	11	3	68
7	4W4		BEAM		13	S	X			2	3.625	2	9.000	2	3.625	2	9.000							10	10	10	7	49
5	4W5		BEAM		10	S	X					3	0.625	2	3.625									8	5	8	3	28
2	4W6		BEAM		10	S	X					2	10.375	2	3.625									8	1	7	11	11
5	4W7		BEAM		10	S	X						6.000	2	3.625									3	4	3	2	11
																												4 ⚠
2	5W1		BEAM		20		X			5	4.000													5	4	5	4	11
2	5W2		BEAM		20		X			4	8.038													4	8	4	8	10
14	6W3		WING		20		X	W	2	2	9.000													2	9	2	9	
			INCR = 5.125 IN							5	4.000													5	4	5	4	85
4	6W4		WING		20		X			5	8.000													5	8	5	8	34
12	6W5		WING		20		X	W	2	2	10.000													2	10	2	10	
			INCR = 4.625 IN							4	9.000													4	9	4	9	68
4	6W6		WING		20		X			5	1.000													5	1	5	1	31
	-		INT.BT.NO 2																									
14	6D70		BEAM		28		X			21.000														21		21		43
39	8B21		FOOTING & COL.		20		X			6	4.000													6	4	6	4	659
12	6D22		FOOTING		10		X					3	3.000		16.000									7	10	7	6	135
12	6D23		FOOTING		10		X					3	9.000		16.000									8	10	8	6	153
7	8M20		BEAM		20		X			37	7.000													37	7	37	7	702
2	6M21		BEAM		20		X			37	7.000													37	7	37	7	113
7	8M22		BEAM		17		X			16	2.000													17	1	17	1	319
4	8M23		BEAM		20		X			23	7.000													23	7	23	7	252
2	4M24		BEAM		17		X			11	6.000													12	5	12	5	66
2	8M25		BEAM		17		X			12	7.000													13	6	13	6	72
3	8M26		BEAM		17		X			12	10.000													13	9	13	9	110
6	7M27		BEAM		7		X			4	1.000	2	9.500											9	8	9	8	158
54	4P20		COL.		16		X			2	9.000													9	6	9	6	343
1	6U20		BEAM		13	S	X			19.625	2	9.000		19.625	2	9.000								10	1	9	7	14
1	6U21		BEAM		13	S	X			2	6.500	2	9.000	2	6.500	2	9.000								11	11	11	5	17

COMPLETE BILL OF REINFORCING STEEL

NO. REQD.	MARK NO. SIZE	MARK NO. MARK	LOCATION	EPOXY (E)	SHAPE NO.	STIRRUP (S)	SUBSTR. (X)	VARIES (V)	NO. EACH	DIMENSIONS B FT.	B IN.	C FT.	C IN.	D FT.	D IN.	E FT.	E IN.	F FT.	F IN.	H FT.	H IN.	K FT.	K IN.	NOMINAL LENGTH FT.	NOMINAL LENGTH IN.	ACTUAL LENGTH FT.	ACTUAL LENGTH IN.	WEIGHT LBS.
1	6U22		BEAM		13	S	X			2	10.625	2	9.000	2	10.625	2	9.000							12	7	12	1	10
14	6U23		BEAM		13	S	X			2	11.000	2	9.000	2	11.000	2	9.000							12	8	12	2	256
23	6U24		BEAM		13	S	X			2	12.000	2	10.875	2	11.000	2	10.875							12	11	12	8	394
20	6U25		BEAM		13	S	X			2	11.000	3	2.500	2	11.000	3	2.500							13	7	13	1	393
1	6U26		BEAM		13	S	X				19.625	3	2.500		19.625	3	2.500							11	8	10	6	16
1	6U27		BEAM		13	S	X			2	6.500	3	2.500	2	6.500	3	2.500							12	10	12	4	19
1	6U28		BEAM		13	S	X			2	10.625	3	2.500	2	10.625	3	2.500							13	6	13	0	20
2	4U29		BEAM		10	S	X						6.000	2	11.000									3	11	3	9	5
39	8K20		COL.		20		X			19	8.000													19	8	19	8	2048
			INT.BT.NO 3																									
16	4D30		BEAM		20		X				21.000														21		21	42
39	8B31		FOOTING & COL.		20		X			6	4.000													6	4	6	4	659
6	7D32		FOOTING		10		X									3	11.000		8	0.000				15	10	15	6	190
18	9D33		FOOTING		20		X			5	8.000													5	8	5	8	106
18	7D34		FOOTING		20		X			8	8.000													8	8	8	8	319
7	9M30		BEAM		20		X			37	10.000													37	10	37	10	900
2	6M31		BEAM		20		X			37	10.000													37	10	37	10	114
7	9M32		BEAM		17		X			18	5.000													19	3	19	3	458
4	8M33		BEAM		20		X			23	7.000													23	7	23	7	252
2	7M34		BEAM		17		X			11	9.000													12	7	12	7	102 ⚠ 4
2	7M35		BEAM		17		X			12	8.000													13	6	13	6	55
3	7M36		BEAM		17		X			12	11.000													13	9	13	9	84
8	7M37		BEAM		7		X			4	1.000	2	9.500											9	8	9	8	158
63	4P30		COL.		16		X			2	9.000													9	6	9	6	400
2	6U30		BEAM		13	S	X				15.500	2	9.000		15.500	2	9.000							9	5	8	11	27
2	6U31		BEAM		13	S	X				21.375	2	9.000		21.375	2	9.000							10	4	9	11	30
16	6U32		BEAM		13	S	X				23.375	2	9.000		23.375	2	9.000							10	8	10	3	246
7	6U33		BEAM		13	S	X			2	11.000	2	9.000	2	11.000	2	9.000							12	8	12	2	128
21	6U34		BEAM		13	S	X			2	11.000	2	11.000	2	11.000	2	11.000							13	9	12	6	394
13	6U35		BEAM		13	S	X			2	11.000	3	2.625	2	11.000	3	2.625							13	7	13	1	259
16	6U36		BEAM		13	S	X				23.375	3	2.625		23.375	3	2.625							11	8	11	2	248
2	6U37		BEAM		13	S	X				15.500	3	2.625		15.500	3	2.625							10	4	9	10	30
2	6U38		BEAM		13	S	X				21.373	3	2.625		21.375	3	2.625							11	4	10	10	33
2	4U39		BEAM		10	S	X						6.000	2	11.000									3	11	3	9	5
39	8V30		COL.		20		X			23	4.000													23	4	23	4	2430
			INT BT NO 4																									
39	8D41		FOOTING & COL.		20		X			6	4.000													6	4	6	4	659
12	6D42		FOOTING		10		X					3	3.000		16.000									7	10	7	6	135
12	6D43		FOOTING		10		X					3	9.000		16.000									8	10	8	6	153
9	7M40		BEAM		20		X			36	10.000													36	10	36	10	438
4	6M41		BEAM		20		X			36	10.000													36	10	36	10	111
9	7M42		BEAM		17		X			14	11.000													15	9	15	9	290
5	7M43		BEAM		20		X			21	10.000													21	10	21	10	223

STATE	PROJ NO	SHEET NO
MO		49

SHAPE 6 · SHAPE 7 · SHAPE 8 · SHAPE 9

SHAPE 10 · SHAPE 11 · SHAPE 12 · SHAPE 13

SHAPE 14 · SHAPE 15

SHAPE 16 · SHAPE 17 · SHAPE 18 · SHAPE 20 · SHAPE 19

SHAPE 21 · SHAPE 22 · SHAPE 23

SHAPE 24 · SHAPE 25 · SHAPE 26

SHAPE 27 · SHAPE 28 · SHAPE 29

SHAPE 30 · SHAPE 31 · SHAPE 32

BENDING DIAGRAMS

6d FOR #3 THRU #5
12d FOR #6 OR 2½" MIN.

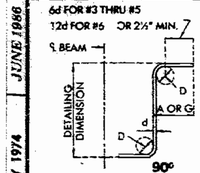

6d OR 2½" MIN.

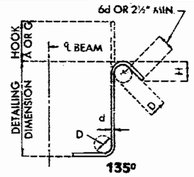

STIRRUP HOOK DIMENSIONS GRADES 40-50-60 KSI				
BAR SIZE	D (IN.)	90° HOOK HOOK A OR G	135° HOOK HOOK A OR G	135° HOOK APPROX. H
#3	1½"	4"	4"	2½"
#4	2"	4½"	4½"	3"
#5	2½"	6"	5½"	3¾"
#6	4½"	12"	7¾"	4½"

NOTE: UNLESS OTHERWISE NOTED DIAMETER "D" IS THE SAME FOR ALL BENDS AND HOOKS ON A BAR.

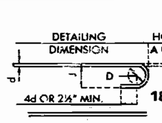

SIZE OF 180° HOOKS (GRADE 40 KSI)
D - 5d FOR #3 THRU #11
D - 10d FOR #14 AND #18

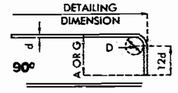

SIZE OF 90° HOOKS (ALL GRADES) AND 180° HOOKS (GRADE 60 KSI)
D - 6d FOR #3 THRU #8
D - 8d FOR #9, #10 AND #11
D - 10d FOR #14 AND #18

END HOOK DIMENSIONS					
BAR SIZE	D (IN.)	180° HOOKS ALL GRADES A OR G	180° HOOKS ALL GRADES J	90° HOOKS ALL GRADES A OR G
#3	2¼"	5"	3"	6"
#4	3"	6"	4"	8"
#5	3¾"	7"	5"	10"
#6	4½"	8"	6"	12"
#7	5¼"	10"	7"	14"
#8	6"	11"	8"	16"
#9	9½"	15"	11¾"	19"
#10	10¾"	17"	13¼"	22"
#11	12"	19"	14¾"	2'-0"
#14	18¼"	2'-3"	21¾"	2'-7"

NOTES:

ALL STANDARD HOOKS AND BENDS OTHER THAN 180 DEG. TO BE BENT WITH SAME PROCEDURE AS FOR 90 DEG. STD. HOOKS.

HOOKS AND BENDS SHALL BE IN ACCORDANCE WITH THE PROCEDURES AS SHOWN ON THIS SHEET.

E - EPOXY COATED REINFORCEMENT.
S - STIRRUP
X - BAR IS INCLUDED IN SUBSTRUCTURE QUANTITIES.
V - BAR DIMENSIONS VARY IN EQUAL INCREMENTS BETWEEN DIMENSIONS SHOWN ON THIS LINE AND THE FOLLOWING LINE.
NO. EA. - NUMBER OF BARS OF EACH LENGTH.
NOMINAL LENGTHS - ARE BASED ON OUT TO OUT DIMENSIONS SHOWN IN BENDING DIAGRAMS AND ARE LISTED FOR FABRICATORS USE. (NEAREST INCH)
ACTUAL LENGTHS - ARE MEASURED ALONG CENTERLINE BAR TO THE NEAREST INCH.
PAYWEIGHTS ARE BASED ON ACTUAL LENGTHS.

JUNE 1988
MAY 1974
DETAILED Aug. 1988
CHECKED Aug. 1988

SEE FINAL PLANS

Note: This drawing is not to scale. Follow dimensions.

Sheet No. 43 of 49

⚠ Revised 5/3/89 JACKSON COUNTY

A-2733

COMPLETE BILL OF REINFORCING STEEL

NO. REQD.	MARK NO. SIZE	MARK NO. MARK	LOCATION	(E) EPOXY	SHAPE NO.	(S) STIRRUP	(X) SUBSTR.	(V) VARIES	NO. EACH	DIMENSIONS B FT.	B IN.	C FT.	C IN.	D FT.	D IN.	E FT.	E IN.	F FT.	F IN.	H FT.	H IN.	K FT.	K IN.	NOMINAL LENGTH FT.	NOMINAL LENGTH IN.	ACTUAL LENGTH FT.	ACTUAL LENGTH IN.	WEIGHT LBS.
2	7M44		BEAM		17		X			11	1.000													11	11	11	11	45
4	7M43		BEAM		17		X			12	3.000													13	1	13	1	107
3	7M46		BEAM		17		X			12	7.000													13	7	13	7	83
8	7M47		BEAM		7		X			4	4.000	3	3.500											10	5	10	5	170
69	4P40		COLUMN		16		X			2	9.000													9	6	9	6	438
1	6M40		BEAM		13	S	X			2	7.625	2	9.000	2	7.625	2	9.000							12	1	11	7	13
1	6M41		BEAM		13	S	X			3	2.500	2	9.000	3	2.500	2	9.000							13	3	12	9	15
15	6M42		BEAM		13	S	X			3	5.000	2	9.000	3	5.000	2	9.000							13	8	13	2	293
26	6M43		BEAM		13	S	X			3	5.000	2	10.875	3	5.000	2	10.875							13	11	13	6	406
20	6M44		BEAM		13	S	X			3	5.000	3	2.125	3	5.000	3	2.125							14	4	14	0	421
1	6M45		BEAM		13	S	X			2	7.625	3	3.875	2	7.625	3	3.875							13	3	12	11	19
1	6M46		BEAM		13	S	X			3	2.500	3	3.875	3	2.500	3	3.875							14	4	13	11	21
2	4M47		BEAM		10	S	X						6.000	3	5.000									4	9	4	3	8
39	8M48		COLUMN		20		X			24	7.000													24	7	24	7	2560
20	2M2		ANCHOR BOLT WELL		22		X				18.000		9.125											26	1	26	1	84
			INT BT NO 5																									
20	4050		BEAM		20		X				21.900													21		21		53
39	8051		FOOTING & COL.		20		X			6	4.000													6	4	6	4	659
6	7052		FOOTING		10		X					3	11.000	8	0.000									15	10	15	6	190
105	5053		FOOTING		20		X			5	3.000													5	8	5	8	104
18	7054		FOOTING		20		X			8	8.000													8	8	8	8	319
7	9M50		BEAM		20		X			37	3.000													37	3	37	3	867
2	4M51		BEAM		20		X			37	3.000													37	3	37	3	112
37	9M52		BEAM		17		X			18	4.000													19	7	19	7	468
4	8M53		BEAM		20		X			26	4.000													26	4	26	4	281
2	9M54		BEAM		17		X			11	4.000													12	7	12	7	84
2	9M55		BEAM		17		X			12	6.000													13	9	13	9	96
3	9M56		BEAM		17		X			12	9.000													14	0	14	0	143
8	3M57		BEAM		7		X			4	1.000	2	9.500											5	8	9	8	156
72	4P58		COLUMN		16		X			2	9.000													9	6	9	6	457
2	9M59		BEAM		13	S	X				18.500	2	9.000		18.500	2	9.000							9	11	9	5	28
2	6M61		BEAM		13	S	X				22.500	2	9.000		22.500	2	9.000							10	7	10	1	30
12	6M62		BEAM		13	S	X				23.375	2	9.000		23.375	2	9.000							10	8	10	3	185
9	6M63		BEAM		13	S	X			2	11.000	2	9.000	2	11.000	2	9.000							12	8	12	2	164
20	6M64		BEAM		13	S	X			2	11.000	2	10.625	2	11.000	2	10.625							12	11	12	5	373
14	6M65		BEAM		13	S	X			2	11.000	3	1.875	2	11.000	3	1.875							13	9	13	0	273
12	6M66		BEAM		13	S	X				23.375	3	3.625		23.375	3	3.625							11	10	11	4	204
2	6M67		BEAM		13	S	X				18.500	3	3.625		18.500	3	3.625							11	0	16	6	32
2	4M68		BEAM		13	S	X				22.500	3	3.625		22.500	3	3.625							11	8	11	2	34
2	4M69		BEAM		10	S	X						6.000	2	11.000									3	11	3	9	5
39	8P60		COLUMN		20		X			25	9.000													25	9	25	9	2481
			INT BT NO. 6&7																									
164	9 P40		FOOTING & COL.		17		X			8	1.000													9	4	9	4	5204
8	6 P41		FOOTING		10		X					5	4.000											21	8	21	4	256
24	7 P42		FOOTING		20		X			11	6.000													11	8	11	8	763
44	6 P43		FOOTING		20		X			8	8.000													8	8	8	8	573
32	6 B88		BEAM		20		X				21.000													21		21		84

COMPLETE BILL OF REINFORCING STEEL

NO. REQD.	MARK NO. SIZE	MARK NO. MARK	LOCATION	(E) EPOXY	SHAPE NO.	(S) STIRRUP	(X) SUBSTR.	(V) VARIES	NO. EACH	DIMENSIONS B FT.	B IN.	C FT.	C IN.	D FT.	D IN.	E FT.	E IN.	F FT.	F IN.	H FT.	H IN.	K FT.	K IN.	NOMINAL LENGTH FT.	NOMINAL LENGTH IN.	ACTUAL LENGTH FT.	ACTUAL LENGTH IN.	WEIGHT LBS.
18	10 M68		BEAM		17		X			40	2.000													41	7	41	7	3221
6	8 M68		TIE BEAM		20		X			26	6.000													26	6	26	6	428
6	8 M62		TIE BEAM		20		X			24	8.000													24	8	24	8	395
4	10 M63		BEAM		17		X			12	2.000													13	7	13	7	234
4	10 M64		BEAM		17		X			13	7.000													15	0	15	0	258
10	10 M65		BEAM		17		X			13	11.000													15	4	15	4	660
8	6 M66		BEAM		20		X			39	4.000													39	4	39	4	473
18	10 M67		BEAM		20		X			39	4.000													39	4	39	4	3047
16	7 M68		BEAM		7		X			4	7.000	3	9.500											11	3	11	3	368
112	4 M69		TIE BEAM		20		X			22	2.000													22	2	22	2	1658
48	4 P60		COLUMN		16		X			5	9.000													10	11	10	11	607
120	4 P61		COLUMN		16		X			4	9.000													15	9	15	9	1263
58	4 P62		COLUMN		16		X			3	9.000													12	8	12	8	491
52	6 U60		BEAM		13	S	X			3	11.000	3	9.000	3	11.000	3	9.000							16	8	26	2	1263
2	6 U61		BEAM		13	S	X			2	6.250	3	9.375	2	0.625	3	9.000							13	5	12	11	39
2	6 U62		BEAM		13	S	X			3	5.500	3	9.000	3	5.500	3	9.000							15	9	15	3	46
22	6 U63		BEAM		13	S	X			3	11.000	4	1.000	3	11.000	4	1.000							17	4	16	10	556
2	6 U64		BEAM		13	S	X			2	0.625	4	1.000	2	0.625	4	1.000							13	7	13	1	39
2	6 U65		BEAM		13	S	X			3	5.500	4	1.000	3	5.500	4	1.000							16	5	15	11	48
24	4 U66		BEAM		10	S	X						6.000	5	11.000									4	11	4	9	76
80	4 U67		TIE BEAM		10	S	X					23	3.500	29	9.000									33	8	33	4	1790
4	4 U68		BEAM		10	S	X						6.000	3	9.125									4	9	4	7	32
32	6 U69		BEAM		13	S	X			2	7.375	3	9.000	2	7.375	3	9.000							14	0	13	7	633
32	6 U70		BEAM		13	S	X			2	7.375	4	1.000	2	7.375	4	1.000							14	8	14	3	685
46	8 W60		COLUMN (BENT 6)		20		X			17	0.000													17	0	17	0	2088
92	8 W61		COLUMN		20		X			9	8.000													9	8	9	8	2375
116	9 W62		COLUMN		20		X			29	10.000													29	10	29	10	11766
116	9 W63		COLUMN		20		X			12	6.000													12	6	12	6	4930
164	9 W64		COLUMN		20		X			11	10.000													11	10	11	10	6598
46	8 W30		COLUMN (BENT 7)		20		X			17	7.000													17	7	17	7	2160
			INT. BT. NO. 8																									
69	8080		FOOTING & COL.		20		X			7	8.000													7	8	7	8	1612
18	5081		FOOTING		20		X			5	8.000													5	8	5	8	104
6	6082		FOOTING		10		X					3	6.000	10	0.000									17	8	16	7	264
18	8083		FOOTING		20		X			10	6.000													10	8	10	8	513
9	7M80		BEAM		17		X			34	0.000													34	10	34	10	356
4	7M81		BEAM		17		X			13	7.000													14	5	14	5	116
8	7M82		BEAM		7		X			4	10.000	4	5.750											12	1	12	1	198
2	7M83		BEAM		17		X			11	1.000													11	11	11	11	49
2	7M84		BEAM		17		X			12	7.000													13	5	13	5	55
5	7M85		BEAM		17		X			13	0.000													13	10	13	10	141
4	6M86		BEAM		20		X			39	2.000													39	2	39	2	235
9	7M87		BEAM		20		X			39	2.000													39	2	39	2	721
120	4P86		COLUMN		16		X			3	9.000													12	8	12	8	1615
28	5S80		BEAM		13	S	X			4	7.000	3	9.000	4	7.000	3	9.000							17	7	17	3	504
11	5U81		BEAM		13	S	X			4	7.000	4	1.000	4	7.000	4	1.000							18	3	17	11	206
1	5U82		BEAM		13	S	X			3	7.250	3	9.000	3	7.250	3	9.000							15	8	15	4	16
1	5U83		BEAM		13	S	X			4	8.000	3	9.000	4	8.000	3	9.000							17	5	17	1	18
1	5U84		BEAM		13	S	X			3	7.250	4	1.000	3	7.250	4	1.000							16	4	16	0	17
1	5U85		BEAM		13	S	X			4	6.000	4	1.000	4	6.000	4	1.000							18	1	17	9	19
14	4U86		BEAM		10	S	X						6.000	4	7.000									5	7	5	5	58

STATE	PROJ NO	SHEET NO
MO		50

SHAPE 6 · SHAPE 7 · SHAPE 8 · SHAPE 9

SHAPE 10 · SHAPE 11 · SHAPE 12 · SHAPE 13

SHAPE 14 · SHAPE 15

SHAPE 16 · SHAPE 17 · SHAPE 18 · SHAPE 20 · SHAPE 19

SHAPE 21 · SHAPE 22 · SHAPE 23

SHAPE 24 · SHAPE 25 · SHAPE 26

SHAPE 27 · SHAPE 28 · SHAPE 29

SHAPE 30 · SHAPE 31 · SHAPE 32

SHAPE 33

BENDING DIAGRAMS

6d FOR #3 THRU #5
12d FOR #6 OR 2½" MIN.

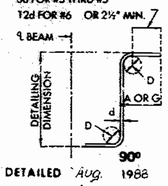

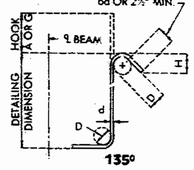

DETAILED Aug. 1988
CHECKED Aug. 1988

STIRRUP HOOK DIMENSIONS

BAR SIZE	D (IN.)	GRADES 40-50-60 KSI 90° HOOK A OR G	135° HOOK A OR G	135° HOOK APPROX. H
#3	1½"	4"	4"	2½"
#4	2"	4½"	4½"	3"
#5	2½"	6"	5½"	3¾"
#6	4½"	12"	7¾"	4½"

NOTE: UNLESS OTHERWISE NOTED DIAMETER "D" IS THE SAME FOR ALL BENDS AND HOOKS ON A BAR.

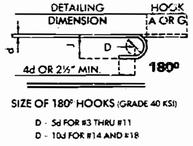

SIZE OF 180° HOOKS (GRADE 40 KSI)
D - 5d FOR #3 THRU #11
D - 10d FOR #14 AND #18

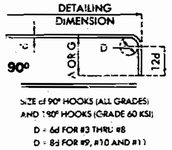

SIZE of 90° HOOKS (ALL GRADES) AND 180° HOOKS (GRADE 60 KSI)
D - 6d FOR #3 THRU #8
D - 8d FOR #9, #10 AND #11
D - 10d FOR #14 AND #18

END HOOK DIMENSIONS

BAR SIZE	D (IN.)	180° HOOKS ALL GRADES A OR G	180° HOOKS ALL GRADES J	90° HOOKS ALL GRADES A OR G
#3	2¼"	5"	3"	6"
#4	3"	6"	4"	8"
#5	3¾"	7"	5"	10"
#6	4½"	8"	6"	12"
#7	5¼"	10"	7"	14"
#8	6"	11"	8"	16"
#9	9½"	15"	11¾"	19"
#10	10¾""	17"	13¾"	22"
#11	12"	19"	14¾"	2'-0"
#14	18¼"	2'-3"	21¾"	2'-7"

NOTES:

ALL STANDARD HOOKS AND BENDS OTHER THAN 180 DEG. TO BE BENT WITH SAME PROCEDURE AS FOR 90 DEG. STD. HOOKS.

HOOKS AND BENDS SHALL BE IN ACCORDANCE WITH THE PROCEDURES AS SHOWN ON THIS SHEET.

E - EPOXY COATED REINFORCEMENT.
S - STIRRUP
X - BAR IS INCLUDED IN SUBSTRUCTURE QUANTITIES.
V - BAR DIMENSIONS VARY IN EQUAL INCREMENTS BETWEEN DIMENSIONS SHOWN ON THIS LINE AND THE FOLLOWING LINE.
NO. EA. - NUMBER OF BARS OF EACH LENGTH.
NOMINAL LENGTHS - ARE BASED ON OUT TO OUT DIMENSIONS SHOWN IN BENDING DIAGRAMS AND ARE LISTED FOR FABRICATORS USE. (NEAREST INCH)
ACTUAL LENGTHS - ARE MEASURED ALONG CENTERLINE BAR TO THE NEAREST INCH.
PAYWEIGHTS ARE BASED ON ACTUAL LENGTHS.

Note: This drawing is not to scale. Follow dimensions.

JACKSON COUNTY

A-2733

FOR INFORMATION ONLY

A27331, Sht. 56

COMPLETE BILL OF REINFORCING STEEL

NO. REQD.	MARK NO. SIZE MARK	LOCATION	EPOXY (E)	SHAPE NO.	STIRRUP (S)	SUBSTR. (X)	VARIES (V)	NO. EACH	DIMENSIONS B FT. IN.	C FT. IN.	D FT. IN.	E FT. IN.	F FT. IN.	H FT. IN.	K FT. IN.	NOMINAL LENGTH FT. IN.	ACTUAL LENGTH FT. IN.	WEIGHT LBS.
69	8W80	COLUMN		20		X			22 9.000							22 9	22 9	4191
69	8W81	COLUMN		20		X			24 10.000							24 10	24 10	4575
20	2N3	ANCHOR BOLT WELL		22		X			2 1.000	9.25						33 2	33 2	111
		INT BT NO 9																
69	8D96	FOOTING & COL		20		X			7 3.000							7 8	7 8	1412
18	5D91	FOOTING		20		X			6 8.000							6 8	6 8	125
6	8D92	FOOTING		10		X			9 10.000	11 0.000						20 8	20 3	324
21	8D93	FOOTING		20		X			11 8.000							11 8	11 8	654
16	6D94	BEAM		20		X			21.000							21	21	42
6	6H90	BEAM		17		X			31 11.000							32 7	32 7	294
8	7.92	BEAM		7		X			4 7.000	3 9.500						11 3	11 3	184
10	6H93	BEAM		20		X			38 8.000							38 8	38 8	581
4	6H94	BEAM		20		X			38 8.000							38 8	38 8	232
4	6H95	BEAM		17		X			14 3.000							14 11	14 11	90
2	6H96	BEAM		17		X			11 9.000							12 5	12 5	37
4	6H97	BEAM		17		X			13 2.000							13 9	13 9	83
4	6H98	BEAM		17		X			13 8.000							14 4	14 4	84
123	4P91	COLUMN		16		X			3 9.000							12 8	12 8	1041
28	6U90	BEAM		13	S	X			3 11.000	3 9.000	3 11.000	3 9.000				16 8	16 2	680
13	6U91	BEAM		13	S	X			3 11.000	4 1.000	3 11.000	4 1.000				17 4	16 10	329
1	6U92	BEAM		13	S	X			3 1.750	4 1.000	3 1.750	4 1.000				15 9	15 3	23
1	6U93	BEAM		13	S	X			3 1.750	3 9.000	3 1.750	3 9.000				15 1	14 7	22
14	4L94	BEAM		16	S	X				6.000	3 11.000					4 11	4 9	44
1	6U95	BEAM		13	S	X			3 10.000	3 9.000	3 10.000	3 9.000				16 6	16 0	24
	6U96	BEAM		13	S	X			3 10.000	4 1.000	3 10.000	4 1.000				17 2	16 6	25
69	8W90	COLUMN		20		X			22 11.000							22 11	22 11	4222
69	8W91	COLUMN		20		X			25 10.000							25 10	25 10	4799
		INT BT NO 10																
69	8D100	FOOTING & COL		20		X			7 8.000							7 8	7 8	1412
9	5D101	FOOTING		20		X			8 11.000							8 11	8 11	86
18	5D102	FOOTING		20		X			5 8.000							5 8	5 8	106
6	6D103	FOOTING		10		X				3 6.000	6 3.000					15 3	14 11	134
16	6D104	BEAM		20		X			21.000							21	21	42
10	6H100	BEAM		17		X			13 2.000							13 10	13 10	208
6	6H101	BEAM		20		X			21 11.000							23 11	23 11	198
8	7H103	BEAM		7		X			4 7.000	3 9.500						11 3	11 3	184
4	6H105	BEAM		20		X			38 8.000							38 8	38 8	232
10	6H105	BEAM		20		X			38 8.000							38 8	38 8	581
2	6H106	BEAM		17		X			21 9.000							12 5	12 5	37
4	6H107	BEAM		17		X			13 1.000							13 9	13 9	83
4	6H108	BEAM		17		X			13 8.000							14 4	14 4	84
123	4P100	COLUMN		16		X			3 9.000							12 8	12 8	1041
8	6U100	BEAM		13	S	X			3 11.000	3 9.000	3 11.000	3 9.000				16 8	16 2	194
19	6U101	BEAM		13	S	X			3 11.000	3 10.750	3 11.000	3 10.750				16 11	16 5	468
12	6U102	BEAM		13	S	X			3 11.000	4 1.875	3 11.000	4 1.875				17 5	17 0	281
1	6U103	BEAM		13	S	X			3 1.750	3 9.000	3 1.750	3 9.000				15 1	14 7	22
1	6U104	BEAM		13	S	X			3 1.750	4 1.875	3 1.750	4 1.875				15 11	15 5	23

COMPLETE BILL OF REINFORCING STEEL

NO. REQD.	MARK NO. SIZE MARK	LOCATION	EPOXY (E)	SHAPE NO.	STIRRUP (S)	SUBSTR. (X)	VARIES (V)	NO. EACH	DIMENSIONS B FT. IN.	C FT. IN.	D FT. IN.	E FT. IN.	F FT. IN.	H FT. IN.	K FT. IN.	NOMINAL LENGTH FT. IN.	ACTUAL LENGTH FT. IN.	WEIGHT LBS.
11	4U185	BEAM		10	S	X				6.000	3 11.000					4 11	4 9	35
1	6U186	BEAM		13	S	X			3 10.875	3 9.000	3 10.875	3 9.000				16 7	16 1	24
1	6U187	BEAM		13	S	X			3 10.875	4 1.875	3 10.875	4 1.875				17 5	16 11	25
69	8V100	COLUMN		20		X			22 7.000							22 7	22 7	4161
69	8V101	COLUMN		20		X			25 10.000							25 10	25 10	4759
		INT BT NO 11																
20	6D113	BEAM		20		X			21.000							21	21	35
69	8D111	FOOTING & COL.		20		X			7 8.000							7 8	7 8	1412
6	6D112	FOOTING		10		X				3 6.000	8 6.000					15 6	15 2	137
9	5D113	FOOTING		20		X			9 2.000							9 2	9 2	84
18	5D114	FOOTING		20		X			5 8.000							5 8	5 8	106
7	7H110	BEAM		20		X			42 1.000							42 1	42 1	602
4	6H111	BEAM		20		X			42 1.000							42 1	42 1	253
2	7H112	BEAM		17		X			42 1.000							43 9	43 9	179
2	7H113	BEAM		18		X			45 1.500							46 9	46 9	191
3	7H114	BEAM		18		X			45 9.000							47 5	47 5	291
3	7H115	BEAM		7		X			4 7.000	3 9.500						11 3	11 3	184
118	4P110	COLUMN		16		X			3 9.000							12 8	12 8	998
2	5U110	BEAM		13	S	X			3 1.000	3 9.000	3 1.000	3 9.000				14 7	14 3	30
2	5U111	BEAM		13	S	X			3 9.750	3 9.000	3 9.750	3 9.000				16 1	15 9	33
45	5U112	BEAM		13	S	X			3 11.000	3 9.000	3 11.000	3 9.000				16 3	15 11	747
2	4U113	BEAM		10	S	X				6.000	3 6.500					6 7	6 5	6
18	6U114	BEAM		10	S	X				6.000	3 11.000					4 11	4 9	57
69	8V130	COLUMN		20		X			23 7.000							23 7	23 7	4545
23	8V111	COLUMN		20		X			22 5.000							22 5	22 5	1327
23	8V112	COLUMN		20		X			22 10.000							22 10	22 10	1402
23	8V113	COLUMN		20		X			23 2.000							23 2	23 2	1423
		INT. BT. NO. 12																
84	9D120	FOOTING & COL.		20		X			9 11.000							9 11	9 12	2832
6	6D121	FOOTING		10		X				7 4.000	14 8.000					28 8	28 4	295
42	8D122	FOOTING		20		X			12 8.000							12 8	12 8	1420
48	8D123	FOOTING		20		X			14 8.000							14 8	14 8	1890
2	7H120	BEAM		18		X			48 9.000							50 5	50 5	236
2	7H121	BEAM		18		X			51 3.000							52 11	52 11	216
5	7H122	BEAM		18		X			52 2.000							53 10	53 10	550
4	6H123	BEAM		20		X			48 9.000							48 9	48 9	293
9	7H124	BEAM		20		X			48 9.000							48 9	48 9	897
8	7H125	BEAM		7		X			4 6.000	3 9.750						11 1	11 1	141
24	5H126	COLLISION WALL		20		X			37 10.000							37 10	37 10	947
10	6H127	COLLISION WALL		20		X			38 8.000							38 6	38 8	581
1.7	4P120	COLUMN		16		X			3 9.000							12 8	12 8	905
49	5U128	BEAM		13	S	X			3 11.000	3 9.000	3 11.000	3 9.000				16 3	15 11	818
2	5U121	BEAM		13	S	X			2 2.125	3 9.000	2 2.125	3 9.000				12 9	12 6	26
2	5U122	BEAM		13	S	X			3 8.500	3 9.000	3 8.500	3 9.000				15 10	15 6	32

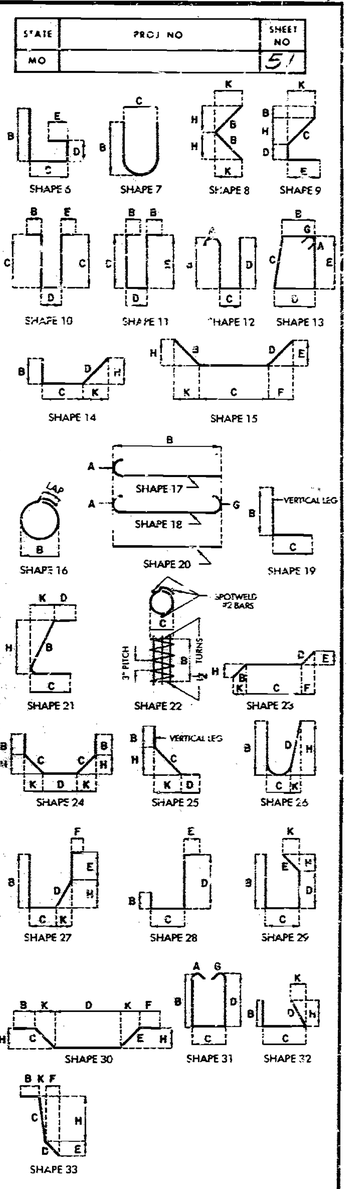

BENDING DIAGRAMS

STATE	PROJ NO	SHEET NO
MO		51

STIRRUP HOOK DIMENSIONS

GRADES 40-50-60 KSI

BAR SIZE	D (IN.)	90° HOOK A OR G	135° HOOK A OR G	135° HOOK APPROX. H
#3	1½"	4"	4"	2½"
#4	2"	4½"	4½"	3"
#5	2½"	6"	5½"	3¾"
#6	4½"	12"	7¾"	4½"

NOTE: UNLESS OTHERWISE NOTED DIAMETER "D" IS THE SAME FOR ALL BENDS AND HOOKS ON A BAR.

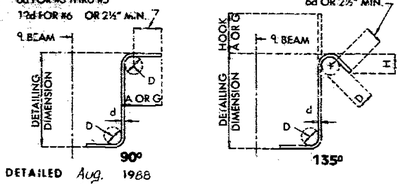

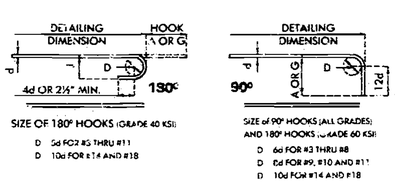

END HOOK DIMENSIONS

BAR SIZE	D (IN.)	180° HOOKS ALL GRADES A OR G	180° HOOKS ALL GRADES J	90° HOOKS ALL GRADES A OR G
#3	2½"	5"	3"	6"
#4	3"	6"	4"	8"
#5	3¾"	7"	5"	10"
#6	4½"	8"	6"	12"
#7	5¼"	10"	7"	14"
#8	6"	11"	8"	16"
#9	9½"	15"	11¾"	19"
#10	10¾"	17"	13¼"	22"
#11	12"	19"	14¾"	2'-0"
#14	18¼"	2'-3"	21¾"	2'-7"

NOTES:

ALL STANDARD HOOKS AND BENDS OTHER THAN 180 DEG. TO BE BENT WITH SAME PROCEDURE AS FOR 90 DEG. STD. HOOKS.

HOOKS AND BENDS SHALL BE IN ACCORDANCE WITH THE PROCEDURES AS SHOWN ON THIS SHEET.

E - EPOXY COATED REINFORCEMENT.
S - STIRRUP
X - BAR IS INCLUDED IN SUBSTRUCTURE QUANTITIES.
V - BAR DIMENSIONS VARY IN EQUAL INCREMENTS BETWEEN DIMENSIONS SHOWN ON THIS LINE AND THE FOLLOWING LINE.
NO. EA. - NUMBER OF BARS OF EACH LENGTH.
NOMINAL LENGTHS - ARE BASED ON OUT TO OUT DIMENSIONS SHOWN IN BENDING DIAGRAMS AND ARE LISTED FOR FABRICATORS USE (NEAREST INCH)
ACTUAL LENGTHS - ARE MEASURED ALONG CENTERLINE BAR TO THE NEAREST INCH.
PAYWEIGHTS ARE BASED ON ACTUAL LENGTHS.

DETAILED Aug. 1988
CHECKED Aug. 1988

Note: This drawing is not to scale. Follow dimensions.

Sheet No. 45 of 49

JACKSON COUNTY A-2733

FOR INFORMATION ONLY

A27331, Sht. 57

COMPLETE BILL OF REINFORCING STEEL

NO. REQD.	MARK NO. SIZE MARK	LOCATION	EPOXY (E)	SHAPE NO.	STIRRUP (S)	SUBSTR. (X)	VARIES (V)	NO. EACH	DIMENSIONS B FT. IN.	C FT. IN.	D FT. IN.	E FT. IN.	F FT. IN.	H FT. IN.	K FT. IN.	NOMINAL LENGTH FT. IN.	ACTUAL LENGTH FT. IN.	WEIGHT LBS
14	4U123	BEAM		20	S	X				6.000	3 11.000					4 11	4 9	51
2	4U124	BEAM		10	S	X				6.000	3 2.500					4 3	4 1	5
2	4U125	BEAM		10	S	X				6.000	3 10.875					4 11	4 9	6
28	9V120	COLUMN		20		X			24 6.000							24 6	24 6	2332
84	9V121	COLUMN		20		X			20 3.000							20 3	20 3	5783
28	9V122	COLUMN		20		X			25 0.000							25 0	25 0	2380
28	9V123	COLUMN		20		X			25 6.000							25 6	25 6	2428
40	9V124	COLLISION WALL		20		X			13 9.000							13 9	13 9	574
		INT. ST. NO. 13																
58	9D130	FOOTING & COL.		20		X			9 2.000							9 2	9 2	1868
4	4D131	FOOTING		10		X				5 4.000	8 0.000					18 8	18 4	110
24	4D132	FOOTING		20		X			8 8.000							8 8	6 8	312
2	10H130	BEAM		18		X			50 9.000							53 7	53 7	463
2	10H131	BEAM		18		X			55 0.000							57 10	57 10	498
4	10H132	BEAM		18		X			56 1.000							58 11	58 11	1014
4	4H133	BEAM		20		X			50 9.000							50 9	50 9	305
8	10H134	BEAM		20		X			50 9.000							50 9	50 9	1747
8	7H135	BEAM		7		X			5 6.000	5 10.500						14 3	14 3	233
6	4H136	BEAM		20		X			5 3.000							5 3	5 3	21
2	4H137	BEAM		20		X			2 9.000							2 9	2 9	4
12	4H138	BEAM		20		X			5 1.000							5 1	5 1	41
5	4H400	COLLISION WALL		20		X			30 8.000							30 8	30 6	238
5	4H401	COLLISION WALL		20		X			29 4.000							29 4	29 2	242
24	5H402	COLLISION WALL		20		X			29 6.000							29 4	29 6	738
69	6P138	COLUMN		16		X			4 9.000							15 9	15 9	726
52	4H139	BEAM		13	S	X			6 0.000	4 9.078	6 0.000	4 9.000				22 10	22 4	1746
2	4H131	BEAM		13	S	X			4 2.875	4 9.000	4 2.875	4 9.000				19 3	18 10	52
2	4H132	BEAM		13	S	X			5 6.750	4 9.000	5 6.750	4 9.000				21 11	21 5	64
39	4H133	BEAM		10	S	X				12.000	8 3.500					10 4	10 2	269
2	4H134	BEAM		10	S	X				12.000	6 9.500					8 10	8 8	12
2	4H135	BEAM		10	S	X				12.000	7 1.500					9 2	9 0	12
2	4H136	BEAM		10	S	X				12.000	7 5.000					9 5	9 3	12
2	4H137	BEAM		10	S	X				12.000	6 4.000					8 4	8 2	11
2	4H138	BEAM		10	S	X				12.000	5 11.500					8 0	7 10	10
2	4H139	BEAM		10	S	X				12.000	7 9.000					9 9	9 7	13
2	4H400	BEAM		10	S	X				12.000	8 1.000					10 1	9 11	13
29	9V130	COLUMN		20		X			22 4.000							22 4	22 4	2202
58	9V131	COLUMN		20		X			20 3.000							20 3	20 3	3993
36	5V132	COLLISION WALL		20		X			13 9.000							13 9	13 9	534
29	9V133	COLUMN		20		X			23 5.000							23 5	23 5	2389
20	2N2	ANCHOR BOLT NELL		22		X			18.000	9.125						26 1	26 1	87
		INT ST NO 14																
20	6D140	BEAM		20		X			21.000							21	21	53
69	8D141	FOOTING & COL.		20		X			7 8.000							7 8	7 8	1412
6	8D142	FOOTING		10		X				4 0.000	10 0.000					18 0	17 7	282
18	8D143	FOOTING		20		X			10 8.000							10 8	10 8	513
18	5D144	FOOTING		20		X			5 8.000							5 8	5 8	106

COMPLETE BILL OF REINFORCING STEEL

NO. REQD.	MARK NO. SIZE MARK	LOCATION	EPOXY (E)	SHAPE NO.	STIRRUP (S)	SUBSTR. (X)	VARIES (V)	NO. EACH	DIMENSIONS B FT. IN.	C FT. IN.	D FT. IN.	E FT. IN.	F FT. IN.	H FT. IN.	K FT. IN.	NOMINAL LENGTH FT. IN.	ACTUAL LENGTH FT. IN.	WEIGHT LBS
7	9H140	BEAM		20		X			51 4.000							51 4	51 4	1722
4	6H141	BEAM		20		X			51 4.000							51 4	51 4	388
2	9H142	BEAM		18		X			51 4.000							51 4	51 4	344
2	9H143	BEAM		18		X			54 0.000							54 0	54 0	364
4	9H144	BEAM		18		X			54 8.000							57 2	57 2	582
8	7H145	BEAM		7		X			4 4.000	3 5.500						10 6	10 4	172
4	4H146	BEAM		20		X			3 6.000							3 6	3 6	9
4	4H147	BEAM		20		X			5 0.000							5 0	5 0	13
12	4H148	BEAM		20		X			5 9.000							5 9	5 9	46
118	4P140	COLUMN		16		X			3 3.000							11 1	11 1	874
2	6U140	BEAM		13	S	X			2 10.125	3 3.000	2 10.125	3 3.000				13 6	13 0	39
2	6U141	BEAM		13	S	X			3 6.250	3 3.000	3 6.250	3 3.000				14 10	14 4	43
61	6U142	BEAM		13	S	X			3 7.000	3 3.000	3 7.000	3 3.000				15 0	14 6	1329
2	4U143	BEAM		10	S	X				11.000	3 3.500					5 2	5 0	7
28	4U144	BEAM		10	S	X				11.000	3 7.000					5 5	5 3	98
69	8V140	COLUMN		20		X			22 7.000							22 7	22 7	4161
23	8V141	COLUMN		20		X			23 1.000							23 1	23 1	1418
23	8V142	COLUMN		20		X			23 9.000							23 9	23 9	1458
23	8V143	COLUMN		20		X			24 5.000							24 5	24 5	1499
		INT ST NO 15																
20	6D150	BEAM		20		X			21.000							21	21	53
54	8D151	FOOTING & COL.		20		X			6 4.000							6 4	6 4	933
6	8D152	FOOTING		10		X				4 0.000	9 0.000					17 8	16 7	266
15	8D153	FOOTING		20		X			9 8.000							9 8	9 8	387
18	5D154	FOOTING		20		X			5 8.000							5 8	5 8	106
8	9H150	BEAM		20		X			52 9.000							52 9	52 9	1435
4	6H151	BEAM		20		X			52 9.000							52 9	52 9	317
2	9H152	BEAM		18		X			52 9.000							55 3	55 3	326
2	9H153	BEAM		18		X			55 1.000							57 2	57 2	392
4	9H154	BEAM		18		X			55 11.000							58 5	58 5	794
8	7H155	BEAM		7		X			4 4.000	3 5.500						10 6	10 6	172
4	4H156	BEAM		20		X			3 11.000							3 11	3 11	10
4	4H157	BEAM		20		X			5 5.000							5 5	5 5	14
12	4H158	BEAM		20		X			6 3.000							6 3	6 3	50
109	6P150	COLUMN		16		X			3 3.000							11 1	11 1	882
2	6U150	BEAM		13	S	X			2 9.375	3 3.000	2 9.375	3 3.000				13 4	12 11	34
2	6U151	BEAM		13	S	X			3 4.250	3 3.000	3 4.250	3 3.000				14 6	14 0	42
87	6U152	BEAM		13	S	X			3 7.000	3 3.000	3 7.000	3 3.000				15 0	14 6	1892
2	4U153	BEAM		10	S	X				6.000	3 0.875					4 1	3 11	5
2	4U154	BEAM		10	S	X				6.000	3 5.750					4 6	4 4	6
38	4U155	BEAM		10	S	X				6.000	3 7.000					4 7	4 5	112
6	4U156	BEAM		10	S	X				11.000	3 7.000					5 5	5 3	21
54	8V150	COLUMN		20		X			20 8.000							20 8	20 8	2980
18	8V151	COLUMN		20		X			21 3.000							21 3	21 3	1021
16	8V152	COLUMN		20		X			21 5.000							21 5	21 5	1029
18	8V153	COLUMN		20		X			22 2.000							22 2	22 2	1065

STATE	PROJ NO	SHEET NO
MO		52

SHAPE 6 SHAPE 7 SHAPE 8 SHAPE 9

SHAPE 10 SHAPE 11 SHAPE 12 SHAPE 13

SHAPE 14 SHAPE 15

SHAPE 16 SHAPE 17 SHAPE 18 SHAPE 20 SHAPE 19

SHAPE 21 SHAPE 22 SHAPE 23

SHAPE 24 SHAPE 25 SHAPE 26

SHAPE 27 SHAPE 28 SHAPE 29

SHAPE 30 SHAPE 31 SHAPE 32

SHAPE 33

BENDING DIAGRAMS

6d FOR #3 THRU #5
12d FOR #6 OR 2½" MIN.

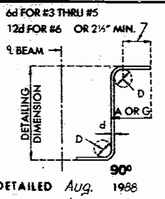

6d OR 2½" MIN.

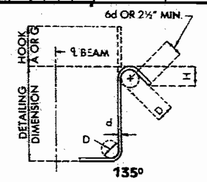

DETAILED Aug. 1988
CHECKED Aug. 1988

STD. 90.8 REVISED MAY 1974 JUNE 1988

STIRRUP HOOK DIMENSIONS

GRADES 40-50-60 KSI

BAR SIZE	D (IN.)	90° HOOK A OR G	135° HOOK A OR G	135° HOOK APPROX H
#3	1½"	4"	4"	2½"
#4	2"	4½"	4½"	3"
#5	2½"	6"	5½"	3¾"
#6	4½"	12"	7¾"	4½"

NOTE: UNLESS OTHERWISE NOTED DIAMETER "D" IS THE SAME FOR ALL BENDS AND HOOKS ON A BAR.

Note: This drawing is not to scale. Follow dimensions.

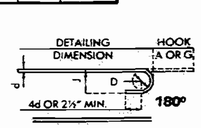

SIZE OF 180° HOOKS (GRADE 40 KSI)

D 5d FOR #3 THRU #11
D 10d FOR #14 AND #18

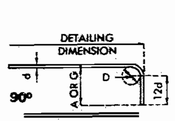

SIZE of 90° HOOKS (ALL GRADES) AND 180° HOOKS (GRADE 60 KSI)

D 6d FOR #3 THRU #8
D 8d FOR #9, #10 AND #11
D 10d FOR #14 AND #18

END HOOK DIMENSIONS

BAR SIZE	D (IN.)	180° HOOKS ALL GRADES A OR G	180° HOOKS ALL GRADES J	90° HOOKS ALL GRADES A OR G
#3	2½"	5"	5"	5"
#4	3"	6"	4"	8"
#5	3¾"	7"	5"	10"
#6	4½"	8"	6"	12"
#7	5¼"	10"	7"	14"
#8	6"	11"	8"	16"
#9	9½"	15"	11¾"	19"
#10	10¾"	17"	13¼"	22"
#11	12"	19"	14¾"	2'-0"
#14	18¼"	2'-3"	21½"	2'-7"

NOTES:

ALL STANDARD HOOKS AND BENDS OTHER THAN 180 DEG. TO BE BENT WITH SAME PROCEDURE AS FOR 90 DEG. STD. HOOKS.

HOOKS AND BENDS SHALL BE IN ACCORDANCE WITH THE PROCEDURES AS SHOWN ON THIS SHEET.

E - EPOXY COATED REINFORCEMENT.
S - STIRRUP
X - BAR IS INCLUDED IN SUBSTRUCTURE QUANTITIES.
V - BAR DIMENSIONS VARY IN EQUAL INCREMENTS BETWEEN DIMENSIONS SHOWN ON THIS LINE AND THE FOLLOWING LINE.
NO. EA. - NUMBER OF BARS OF EACH LENGTH.
NOMINAL LENGTHS - ARE BASED ON OUT TO OUT DIMENSIONS SHOWN IN BENDING DIAGRAMS AND ARE LISTED FOR FABRICATORS USE. (NEAREST INCH)
ACTUAL LENGTHS - ARE MEASURED ALONG CENTERLINE BAR TO THE NEAREST INCH.
PAYWEIGHTS ARE BASED ON ACTUAL LENGTHS.

Sheet No. 46 of 49

JACKSON COUNTY

A-2733

FOR INFORMATION ONLY

A27331, Sht. 58

COMPLETE BILL OF REINFORCING STEEL

NO. REQD.	MARK NO. SIZE	MARK NO. MARK	LOCATION	(E) EPOXY	SHAPE NO.	(S) STIRRUP	(X) SUBSTR.	(V) VARIES	NO. EACH	DIMENSIONS B FT.	B IN.	C FT.	C IN.	D FT.	D IN.	E FT.	E IN.	F FT.	F IN.	H FT.	H IN.	K FT.	K IN.	NOMINAL LENGTH FT. IN.	ACTUAL LENGTH FT. IN.	WEIGHT LBS.
			INT BT NO 16																							
16		6D160	BEAM		20		X				21.002														21	42
56		8D161	FOOTING & COL		20		X			6	9.000													6 4	6 4	913
6		8D162	FOOTING		10		X					6	9.000	11	0.000									23 10	23 3	379
24		8D163	FOOTING		20		X			11	8.000													11 8	11 8	748
18		6D164	FOOTING		20		X			8	8.000													8 8	8 8	236
6		9H160	BEAM		20		X			41	9.000													41 0	41 0	836
4		6H161	BEAM		20		X			41	0.000													41 0	41 0	246
2		9H162	BEAM		18		X			41	0.000													43 6	43 6	296
2		9H163	BEAM		18		X			43	9.000													46 3	46 3	315
2		9H164	BEAM		18		X			44	4.000													46 10	46 10	318
6		7H165	BEAM		7		X			4	4.000	3	3.500											10 5	10 5	170
4		4H166	BEAM		20		X			2	10.000													2 10	2 10	8
4		4H167	BEAM		20		X			4	4.000													4 4	4 4	12
12		4H168	BEAM		20		X			4	9.000													4 9	4 9	38
109		4P160	COLUMN		16		X			3	3.000													11 1	11 1	807
2		4U160	BEAM		13	S	X			2	9.125	3	3.000	2	9.125	3	3.000							13 4	12 10	39
2		8U161	BEAM		13	S	X			3	3.250	3	3.000	3	3.250	3	3.000							14 4	13 10	42
59		6U162	BEAM		13	S	X			3	5.000	3	3.000	3	5.000	3	3.000							14 8	14 2	1170
2		4U163	BEAM		10	S	X						6.000	3	0.875									4 1	3 11	9
2		4U164	BEAM		10	S	X						6.000	3	4.625									4 5	4 3	6
12		4U165	BEAM		10	S	X						6.000	3	5.000									4 5	4 3	34
16		4U166	BEAM		10	S	X						11.000	3	5.000									5 3	5 1	54
54		8V160	COLUMN		20		X			20	9.000													20 9	20 9	2992
18		8V161	COLUMN		20		X			20	9.000													20 9	20 9	997
18		8V162	COLUMN		20		X			21	6.000													21 6	21 6	1033
18		8V163	COLUMN		20		X			22	3.000													22 3	22 3	1069
			INT BT NO 17																							
34		8D170	FOOTING & COL.		20		X			6	4.000													6 4	6 4	913
4		8D171	FOOTING		10		X					4	6.000	9	0.000									18 6	18 1	290
18		8D172	FOOTING		20		X			9	8.000													9 8	9 8	445
18		5D173	FOOTING		20		X			6	8.000													6 8	6 8	125
8		8H170	BEAM		20		X			37	4.000													37 4	37 4	797
4		6H171	BEAM		20		X			37	4.000													37 4	37 4	223
2		8H172	BEAM		18		X			37	4.000													39 2	39 2	209
2		8H173	BEAM		18		X			40	1.000													41 11	41 11	224
4		8H174	BEAM		18		X			40	10.000													42 8	42 8	454
2		6H175	BEAM		20		X			37	4.000													37 4	32 4	112
8		7H176	BEAM		7		X			4	7.000	3	9.500											11 3	11 3	184
2		6H177	BEAM		30	S	X			4	7.000		21.000	2	1.000	2	6.000							10 1	9 11	30
104		4P170	COLUMN		16		X			3	3.000													11 1	11 1	778
2		9U170	BEAM		10	S	X					2	3.000		15.625									5 10	5 7	12
2		9U171	BEAM		20	S	X					2	3.000		21.625									6 4	6 1	13
37		9U172	BEAM		10	S	X					2	3.000		22.000									6 4	6 2	238
16		4U173	BEAM		10	S	X						6.000		22.000									2 10	2 8	29
2		4U174	BEAM		13	S	X			2	10.250	3	3.000	2	10.250	3	3.000							13 6	13 0	39
2		4U175	BEAM		13	S	X			3	6.500	3	3.000	3	6.500	3	3.000							14 11	14 5	43
2		4U176	BEAM		13	S	X			3	10.375	3	3.000	3	10.375	3	3.000							15 6	15 1	45
99		4U177	BEAM		13	S	X			3	11.000	3	3.000	3	11.000	3	3.000							15 8	15 2	1544

COMPLETE BILL OF REINFORCING STEEL

NO. REQD.	MARK NO. SIZE	MARK NO. MARK	LOCATION	(E) EPOXY	SHAPE NO.	(S) STIRRUP	(X) SUBSTR.	(V) VARIES	NO. EACH	DIMENSIONS B FT.	B IN.	C FT.	C IN.	D FT.	D IN.	E FT.	E IN.	F FT.	F IN.	H FT.	H IN.	K FT.	K IN.	NOMINAL LENGTH FT. IN.	ACTUAL LENGTH FT. IN.	WEIGHT LBS.
18		8V130	COLUMN		20		X			35	10.000													35 10	35 10	1722
18		8V131	COLUMN		20		X			36	7.000													36 7	36 7	1758
18		8V132	COLUMN		20		X			37	3.000													37 3	37 3	1790
10		2H1	ANCHOR BOLT WELL		22		X				13.000		9.125											23 0	23 0	38
10		2H2	ANCHOR BOLT WELL		22		X				18.000		9.125											26 1	26 1	44
			INT BT NO 18																							
57		11D180	FOOTING & COL.		17		X			10	2.000													11 9	11 9	3558
6		6D181	FOOTING		10		X					5	4.000	11	0.000									21 8	21 4	192
36		8D182	FOOTING		20		X			11	8.000													11 3	11 8	1121
24		8D183	FOOTING		20		X			8	8.000													8 8	8 8	555
8		9H180	BEAM		20		X			37	0.000													37 0	37 0	1006
4		6H181	BEAM		20		X			37	0.000													37 0	37 0	222
2		9H182	BEAM		18		X			37	0.000													39 6	39 6	269
2		9H183	BEAM		18		X			39	10.000													42 4	42 4	288
4		9H184	BEAM		18		X			40	6.000													43 0	43 0	585
8		7H185	BEAM		7		X			4	7.000	3	9.500											11 3	11 3	184
92		4P180	COLUMN		16		X			3	9.000													12 8	12 8	778
4		5U180	BEAM		13	S	X				18.500	3	9.000		18.500	3	9.000							11 6	11 2	47
4		5U181	BEAM		13	S	X			2	2.125	3	9.000	2	2.125	3	9.000							12 9	12 6	52
4		5U182	BEAM		13	S	X			2	5.875	3	9.000	2	5.875	3	9.000							13 5	13 1	55
80		5U183	BEAM		13	S	X			2	7.375	3	9.000	2	2.375	3	9.000							13 8	13 4	1113
17		5U184	BEAM		13	S	X			3	11.000	3	9.000	3	11.000	3	9.000							14 3	15 11	282
4		4U185	BEAM		10	S	X						6.000	3	11.000									4 11	4 9	13
19		11V180	COLUMN		17		X			31	11.000													33 6	33 6	3382
19		11V181	COLUMN		17		X			32	7.000													34 2	34 2	3449
19		11V182	COLUMN		17		X			33	3.000													34 10	34 10	3514
10		2H2	ANCHOR BOLT WELL		22		X				18.000		9.125											26 1	26 1	44
54		100190	FOOTING & COL.		20		X			9	11.000													9 11	9 11	2304
6		6M191	FOOTING		10		X					9	10.000	13	0.000									24 8	24 4	219
36		8D192	FOOTING		20		X			13	8.000													13 8	13 8	1314
24		7D193	FOOTING		20		X			9	8.000													9 8	9 8	474
8		9H190	BEAM		20		X			44	6.000													44 6	44 6	1210
4		6H191	BEAM		20		X			44	6.000													44 6	44 6	267
2		9H192	BEAM		18		X			44	6.000													47 6	47 0	328
2		9H193	BEAM		18		X			47	4.000													49 10	49 10	339
4		9H194	BEAM		18		X			48	1.000													50 7	50 7	688
8		7H195	BEAM		7		X			4	7.000	3	9.500											11 3	11 3	184
4		6H196	BEAM		20		X			2	7.000													2 7	2 7	7
16		4H197	BEAM		20		X			4	3.000													4 3	4 3	45
82		4P190	COLUMN		16		X			3	9.000													12 8	12 8	694
2		6U190	BEAM		13	S	X			2	6.375	3	9.000	2	6.375	3	9.000							14 2	13 9	41
2		6U191	BEAM		13	S	X			3	4.375	3	9.000	3	4.375	3	9.000							15 6	15 1	45

STATE	PROJ NO	SHEET NO
MO		53

SHAPE 6 · SHAPE 7 · SHAPE 8 · SHAPE 9

SHAPE 10 · SHAPE 11 · SHAPE 12 · SHAPE 13

SHAPE 14 · SHAPE 15

SHAPE 16 · SHAPE 17 · SHAPE 18 · SHAPE 20 · SHAPE 19

SHAPE 21 · SHAPE 22 · SHAPE 23

SHAPE 24 · SHAPE 25 · SHAPE 26

SHAPE 27 · SHAPE 28 · SHAPE 29

SHAPE 30 · SHAPE 31 · SHAPE 32

SHAPE 33 · SHAPE 50

BENDING DIAGRAMS

JUNE 1986

MAY 1974

6d FOR #3 THRU #5
12d FOR #6 OR 2½" MIN.

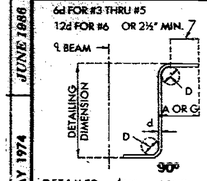

6d OR 2½" MIN.

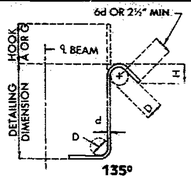

DETAILED Aug. 1988
CHECKED Aug. 1988

STIRRUP HOOK DIMENSIONS

BAR SIZE	D (IN.)	GRADES 40-50-60 KSI 90° HOOK HOOK A OR G	135° HOOK HOOK A OR G	135° HOOK APPROX. H
#3	1½"	4"	4"	2½"
#4	2"	4½"	4½"	3"
#5	2½"	6"	5½"	3¾"
#6	4½"	12"	7¾"	4½"

NOTE: UNLESS OTHERWISE NOTED DIAMETER "D" IS THE SAME FOR ALL BENDS AND HOOKS ON A BAR.

Note: This drawing is not to scale. Follow dimensions.

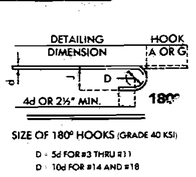

SIZE OF 180° HOOKS (GRADE 40 KSI)

D - 5d FOR #3 THRU #11
D - 10d FOR #14 AND #18

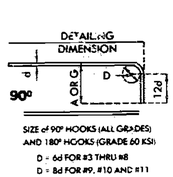

SIZE of 90° HOOKS (ALL GRADES) AND 180° HOOKS (GRADE 60 KSI)

D - 6d FOR #3 THRU #8
D - 8d FOR #9, #10 AND #11
D - 10d FOR #14 AND #18

END HOOK DIMENSIONS

BAR SIZE	D (IN.)	180° HOOKS ALL GRADES A OR G	180° HOOKS ALL GRADES J	90° HOOKS ALL GRADES A OR G
#3	2½"	5"	3"	6"
#4	3"	6"	4"	8"
#5	3¾"	7"	5"	10"
#6	4½"	8"	6"	12"
#7	5¼"	10"	7"	14"
#8	6"	11"	8"	16"
#9	9½"	15"	11¾"	19"
#10	10¾""	17"	13¼"	22"
#11	12"	19"	14¾"	2'-0"
#14	18¼"	2'-3"	21¾"	2'-7"

Sheet No. 47 of 49

NOTES:

ALL STANDARD HOOKS AND BENDS OTHER THAN 180 DEG. TO BE BENT WITH SAME PROCEDURE AS FOR 90 DEG. STD. HOOKS.

HOOKS AND BENDS SHALL BE IN ACCORDANCE WITH THE PROCEDURES AS SHOWN ON THIS SHEET.

E - EPOXY COATED REINFORCEMENT.
S - STIRRUP
X - BAR IS INCLUDED IN SUBSTRUCTURE QUANTITIES.
V - BAR DIMENSIONS VARY IN EQUAL INCREMENTS BETWEEN DIMENSIONS SHOWN ON THIS LINE AND THE FOLLOWING LINE.
NO. EA. - NUMBER OF BARS OF EACH LENGTH.
NOMINAL LENGTHS - ARE BASED ON OUT TO OUT DIMENSIONS SHOWN IN BENDING DIAGRAMS AND ARE LISTED FOR FABRICATORS USE. (NEAREST INCH).
ACTUAL LENGTHS - ARE MEASURED ALONG CENTERLINE BAR TO THE NEAREST INCH.
PAYWEIGHTS ARE BASED ON ACTUAL LENGTHS.

JACKSON COUNTY

A-2733

FOR INFORMATION ONLY

A27331, Sht. 59

COMPLETE BILL OF REINFORCING STEEL

NO. REQD.	MARK NO. SIZE	MARK NO. MARK	LOCATION	EPOXY (E)	SHAPE NO.	STIRRUP (S)	SUBSTR. (X)	VARIES (V)	NO. EACH	DIMENSIONS B FT.	B IN.	C FT.	C IN.	D FT.	D IN.	E FT.	E IN.	F FT.	F IN.	H FT.	H IN.	K FT.	K IN.	NOMINAL LENGTH FT.	NOMINAL LENGTH IN.	ACTUAL LENGTH FT.	ACTUAL LENGTH IN.	WEIGHT LBS.
2	6U192	BEAM			13	S	X			3	8.875	3	9.000	3	8.875	3	9.000							16	3	15	10	48
2	6U193	BEAM			13	S	X			3	10.875	3	9.000	3	10.875	3	9.000							16	7	16	2	49
71	6U194	BEAM			13	S	X			3	11.000	3	9.000	3	11.000	3	9.000							16	8	16	2	1724
2	6U195	BEAM			10	S	X						6.000	3	0.875									4	1	3	11	5
2	6U196	BEAM			10	S	X						6.000	3	6.875									4	7	4	5	6
2	6U197	BEAM			10	S	X						6.000	3	10.125									4	10	4	8	6
34	6U198	BEAM			10	S	X						6.000	3	11.000									4	11	4	9	108
18	10V190	COLUMN			17		X			27	7.000													29	0	29	0	2246
18	10V191	COLUMN			17		X			28	9.000													29	10	29	10	2311
18	10V192	COLUMN			17		X			29	3.000													30	8	30	8	2375
10	ZW2	ANCHOR BOLT WELL			22		X				18.000		9.125											26	1	26	1	44
			INT BT NO 20																									
52	8D200	FOOTING & COL.			20		X			6	4.000													6	4	6	4	879
8	602C1	FOOTING			10		X					5	1.000	7	6.000									17	8	17	4	208
48	8D202	FOOTING			20		X			8	2.000													8	2	9	2	1067
8	10H200	BEAM			20		X			35	10.050													35	10	35	10	1234
4	6H201	BEAM			20		X			31	1.000													31	1	31	1	107
2	10H202	BEAM			17		X			39	1.000													40	6	40	6	349
4	10H203	BEAM			17		X			40	3.000													41	8	41	8	717
2	10H204	BEAM			17		X			40	8.000													42	1	42	1	362
8	10H205	BEAM			20		X			35	8.000													35	8	35	8	1228
4	6H206	BEAM			20		X			35	8.000													35	8	35	8	214
2	10H207	BEAM			17		X			35	8.000													37	1	37	1	319
4	10H208	BEAM			17		X			36	10.000													38	3	38	3	650
2	10H209	BEAM			17		X			37	2.000													38	7	38	7	332
8	2N210	BEAM			9		X			4	2.000	2	11.500											9	11	9	11	162
2	6H200	BEAM			13	S	X			2	0.125	3	3.000	2	0.125	3	3.000							11	10	11	4	34
2	6H201	BEAM			13	S	X			2	8.750	3	3.000	2	8.250	3	3.000							13	2	12	8	38
2	6H202	BEAM			13	S	X			3	0.125	3	3.000	3	0.125	3	3.000							13	10	13	4	40
92	6H203	BEAM			13	S	X			3	1.000	3	3.000	3	1.000	3	3.000							14	0	13	9	1865
4	6H204	BEAM			10	S	X						6.000	3	1.000									4	1	3	11	10
13	8V208	COLUMN			24		X			17	7.000													17	7	17	7	610
13	8V201	COLUMN			20		X			18	4.000													18	4	18	4	636
13	8V202	COLUMN			29		X			19	2.000													19	2	19	2	665
13	8V203	COLUMN			20		X			19	11.000													19	11	19	11	691
10	ZW1	ANCHOR BOLT WELL			22		X				13.000		9.125											23	0	23	0	38
			END BT NO 21																									
6	9D200	FOOTING & WING			20		X			3	9.000													3	9	3	9	23
4	9D201	FOOTING			20		X			4	8.000													4	8	4	8	19
4	9D202	FOOTING			20		X			2	2.000													2	2	2	2	9
9	6F210	WING & BACKWALL			15		X				14.125	11	9.750		14.125		13.500		4.000		13.500		4.000	14	2	14	0	109
6	4F211	WING & BACKWALL			15		X				14.125	2	10.000		14.125		13.500		4.000		13.500		4.000	5	2	5	0	45
8	9H210	BEAM			17		X	V	2	52	1.000													53	4	52	4	
			INCR = 22.625 IN							46	5.000													47	8	47	8	1374
1	6N211	BEAM			20		X			41	11.000													41	11	41	11	63

COMPLETE BILL OF REINFORCING STEEL

NO. REQD.	MARK NO. SIZE	MARK NO. MARK	LOCATION	EPOXY (E)	SHAPE NO.	STIRRUP (S)	SUBSTR. (X)	VARIES (V)	NO. EACH	DIMENSIONS B FT.	B IN.	C FT.	C IN.	D FT.	D IN.	E FT.	E IN.	F FT.	F IN.	H FT.	H IN.	K FT.	K IN.	NOMINAL LENGTH FT.	NOMINAL LENGTH IN.	ACTUAL LENGTH FT.	ACTUAL LENGTH IN.	WEIGHT LBS.
8	9N212	BEAM			17		X	V	2	34	9.000													36	0	36	0	
		INCR = 18.375 IN								30	2.000													31	5	31	5	917
1	8R213	BEAM			20		X			34	9.000													34	9	34	9	52
2	4H214	APPROACH HAUNCH			20		X			21	6.000													21	6	21	6	29
10	4H215	BACKWALL			20		X			23	9.000													23	9	23	9	159
10	4H216	BACKWALL			20		X			23	0.000													23	0	23	0	154
1	4H217	APPROACH HAUNCH			20		X			26	4.000													26	4	26	4	18
5	4H218	BACKWALL			20		X			29	2.000													29	2	29	2	97
5	4H219	BACKWALL			20		X			29	4.000													29	4	29	4	98
2	4H220	WING	E		20		X			27	7.000													27	7	27	7	83
2	6H221	WING			20		X			27	7.000													27	7	27	7	83
10	6H222	WING			20		X	V	2	26	0.000													26	0	26	0	
		INCR = 53.500 IN								8	2.000													8	2	8	2	297
10	4H223	CURTAIN WALL			20		X			4	6.000													4	6	4	6	30
4	6H224	WING	E		20		X			15	0.000													15	0	15	0	90
2	6H225	WING			20		X			15	0.000													15	0	15	0	45
13	6H226	WING			28		X	V	2	14	4.000													14	4	14	4	
		INCR = 21.750 IN								5	3.000													5	3	5	3	176
10	4H227	CURTAIN WALL			20		X			7	3.000													7	3	7	3	48
1	6H228	BEAM			20		X			43	2.000													48	2	48	2	72
1	6H229	BEAM			20		X			30	2.000													30	2	30	2	45
20	4H230	BEAM			20		X			3	3.000													3	3	3	3	43
2	6T211	WING			25		X				15.000	22	9.375	2	9.000					3	9.750	22	5.500	26	9	26	8	80
2	4T212	CURTAIN WALL			19		X			7	2.000	4	8.000											11	10	11	9	16
2	6T213	WING			25		X				15.000	11	0.875		23.000					4	3.000	10	2.750	14	3	14	2	43
2	4T214	CURTAIN WALL			19		X			7	7.000	7	6.000											15	1	15	0	20
63	6U210	BEAM		S	X					3	9.000	2	9.500	4	3.000	2	9.000							14	10	14	4	1396
35	4U211	BEAM		S	X								6.000	3	9.000									4	9	4	7	107
1	6U212	BEAM		S	X					3	7.000	2	9.000	3	7.000	2	9.000							14	0	13	6	28
6	7U213	BEAM		S	X								6	5.000	2	9.000								13	7	13	9	187
12	6U214	BEAM		S	X								2	3.000	3	0.625								7	7	7	3	131
1	6U215	BEAM		S	V					3	4.503	2	9.500	4	0.500	2	9.000							14	5	13	11	21
1	6U216	BEAM		S	X					2	10.250	2	9.500	3	4.250	2	9.000							13	1	12	7	19
1	6U217	BEAM		S	X						20.000	2	9.625	2	2.250	2	9.000							10	8	10	3	15
44	9U218	BEAM			14		X			10	9.500	2	9.000		21.125					11.750		17.500		15	0	14	9	181
44	9U219	APPROACH HAUNCH			10	S	X						15.000		6.000									3	0	2	10	125
2	6V230	BEAM			20		X			3	5.000													3	5	3	5	30
2	6V231	[illegible]			20		X			3	1.000													3	1	3	1	[illegible]
32	6V232	BACKWALL		E	20		X			8	3.000													8	3	8	3	409
55	5V233	BACKWALL		E	20		X			8	3.000													8	3	8	3	473
147	6V234	BACKWALL		E	20		X			8	5.000													8	5	8	5	1782
23	6V217	WING		E	17		X	V	1	6	6.000													7	2	7	2	
		INCR = 2.125 IN								2	7.000													3	3	3	5	180
23	6V218	WING		E	20		X	V	1	6	8.000													6	6	6	6	
		INCR = 2.125 IN								2	9.000													2	9	2	9	163
4	6V219	WING		E	17		X			8	0.000													8	8	8	8	52
4	6V220	WING		E	20		X			6	2.000													6	2	6	2	49
2	6V221	CURTAIN WALL			20		X			6	8.000													6	8	6	8	9
2	6V223	WING			20		X				17.000														17		17	4
9	6V224	WING		E	17		X	V	1	6	6.000													7	2	7	2	
		INCR = 9.125 IN								3	1.000													3	9	3	9	74
9	6V225	WING		E	20		X	V	1	6	8.000													6	8	6	8	
		INCR = 9.125 IN								3	3.000													3	3	3	3	67
5	6V226	WING		E	17		X			8	4.000													8	8	8	8	64

Note : Two addional #5-V213 & #6-H224 are included in the bar bill for testing.

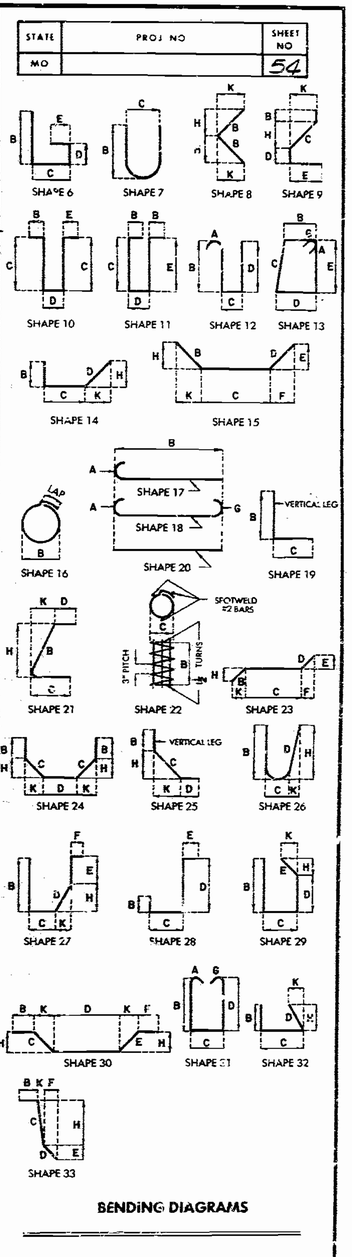

BENDING DIAGRAMS

STATE | PROJ NO | SHEET NO
MO | | 54

STIRRUP HOOK DIMENSIONS

BAR SIZE	D (IN.)	GRADES 40-50-60 KSI 90° HOOK A OR G	135° HOOK A OR G	135° HOOK APPROX H
#3	1½"	4"	4"	2½"
#4	2"	4½"	4½"	3"
#5	2½"	6"	5½"	3¾"
#6	4½"	12"	7¾"	4½"

NOTE: UNLESS OTHERWISE NOTED DIAMETER "D" IS THE SAME FOR ALL BENDS AND HOOKS ON A BAR.

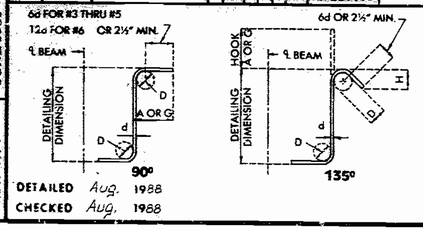

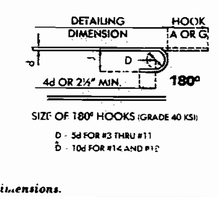

SIZE OF 180° HOOKS (GRADE 40 KSI)
D - 5d FOR #3 THRU #11
D - 10d FOR #14 AND #18

SIZE OF 90° HOOKS (ALL GRADES) AND 180° HOOKS (GRADE 60 KSI)
D - 6d FOR #3 THRU #8
D - 8d FOR #9, #10 AND #11
D - 10d FOR #14 AND #18

EPD HOOK DIMENSIONS

BAR SIZE	D (IN.)	180° HOOKS ALL GRADES A OR G	180° HOOKS ALL GRADES J	90° HOOKS ALL GRADES A OR G
#3	2¼"	5"	3"	6"
#4	3"	6"	4"	8"
#5	3¾"	7"	5"	10"
#6	4½"	8"	6"	12"
#7	5¼"	10"	7"	14"
#8	6"	11"	8"	16"
#9	9½"	15"	11¾"	19"
#10	10¾"	17"	13¼"	22"
#11	12"	1'-7"	14¾"	2'-0"
#14	18¼"	2'-3"	21½"	2'-7"

NOTES:

ALL STANDARD HOOKS AND BENDS OTHER THAN 180 DEG. TO BE BENT WITH SAME PROCEDURE AS FOR 90 DEG. STD. HOOKS.

HOOKS AND BENDS SHALL BE IN ACCORDANCE WITH THE PROCEDURES AS SHOWN ON THIS SHEET.

E - EPOXY COATED REINFORCEMENT.
S - STIRRUP
X - BAR IS INCLUDED IN SUBSTRUCTURE QUANTITIES.
V - BAR DIMENSIONS VARY IN EQUAL INCREMENTS BETWEEN DIMENSIONS SHOWN ON THIS LINE AND THE FOLLOWING LINE.
NO. EA. - NUMBER OF BARS OF EACH LENGTH.
NOMINAL LENGTHS - ARE BASED ON OUT TO OUT DIMENSIONS SHOWN IN BENDING DIAGRAMS AND ARE LISTED FOR FABRICATORS USE (NEAREST INCH).
ACTUAL LENGTHS - ARE MEASURED ALONG CENTERLINE BAR TO THE NEAREST INCH.
PAYWEIGHTS ARE BASED ON ACTUAL LENGTHS.

STD. 90.8 | REVISED | JUNE 1986
MAY 1974

DETAILED Aug. 1988
CHECKED Aug. 1988

Note: This drawing is not to scale. Follow dimensions.

Sheet No. 48 of 49

JACKSON COUNTY

A-2733

FOR INFORMATION ONLY

A27331, Sht. 60

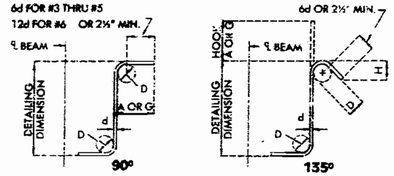

STIRRUP HOOK DIMENSIONS				
		GRADES 40-50-60 KSI		
BAR SIZE	D (IN.)	90° HOOK	135° HOOK	
		HOOK A OR G	HOOK A OR G	APPROX. H
#3	1½"	4"	4"	2½"
#4	2"	4½"	4½"	3"
#5	2½"	6"	5½"	3¾"
#6	4½"	12"	7¾"	4½"

NOTE: UNLESS OTHERWISE NOTED DIAMETER "D" IS THE SAME FOR ALL BENDS AND HOOKS ON A BAR.

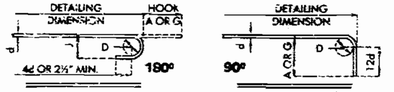

SIZE OF 180° HOOKS (GRADE 40 KSI)
D = 5d FOR #3 THRU #11
D = 10d FOR #14 AND #18

SIZE of 90° HOOKS (ALL GRADES) AND 180° HOOKS (GRADE 60 KSI)
D = 6d FOR #3 THRU #8
D = 8d FOR #9, #10 AND #11
D = 10d FOR #14 AND #18

END HOOK DIMENSIONS				
BAR SIZE	D (IN.)	180° HOOKS ALL GRADES		90° HOOKS ALL GRADES
		A OR G	J	A OR G
#3	2½"	5"	3"	6"
#4	3"	6"	4"	8"
#5	3¾"	7"	5"	10"
#6	4½"	8"	6"	12"
#7	5¼"	10"	7"	14"
#8	6"	11"	8"	16"
#9	9½"	15"	11¾"	19"
#10	10¾"	17"	13¼"	22"
#11	12"	19"	14¾"	2'-0"
#14	18¾"	2'-3"	21 "	2'-7"

NOTES:

ALL STANDARD HOOKS AND BENDS OTHER THAN 180 DEG. TO BE BENT WITH SAME PROCEDURE AS FOR 90 DEG. STD. HOOKS.

HOOKS AND BENDS SHALL BE IN ACCORDANCE WITH THE PROCEDURES AS SHOWN ON THIS SHEET.

E - EPOXY COATED REINFORCEMENT.
S - STIRRUP
X - BAR IS INCLUDED IN SUBSTRUCTURE QUANTITIES.
V - BAR DIMENSIONS VARY IN EQUAL INCREMENTS BETWEEN DIMENSIONS SHOWN ON THIS LINE AND THE FOLLOWING LINE.
NO. EA. - NUMBER OF BARS OF EACH LENGTH.
NOMINAL LENGTHS - ARE BASED ON OUT TO OUT DIMENSIONS SHOWN IN BENDING DIAGRAMS AND ARE LISTED FOR FABRICATORS USE. (NEAREST INCH)
ACTUAL LENGTHS - ARE MEASURED ALONG CENTERLINE BAR TO THE NEAREST INCH.
PAYWEIGHTS ARE BASED ON ACTUAL LENGTHS.

COMPLETE BILL OF REINFORCING STEEL

NO. REQD.	MARK NO. / SIZE MARK	LOCATION	(E) EPOXY	SHAPE NO.	(S) STIRRUP	(X) SUBSTR.	(V) VARIES	NO. EACH	DIMENSIONS B FT. IN.	C FT. IN.	D FT. IN.	E FT. IN.	F FT. IN.	H FT. IN.	K FT. IN.	NOMINAL LENGTH FT. IN.	ACTUAL LENGTH FT. IN.	WEIGHT LBS.
5	6#27	WING	E	20		X			8 6.000							8 6	8 6	64
6	4#22	CURTAIN WALL		20		X			7 1.000							7 1	7 1	28
2	6#22	WING		20		X			20.000							20	20	5
10	2#1	ANCHOR BOLT WELL		22		X			15.000	9.125						23 0	23 0	38
		END OF BAR LIST																

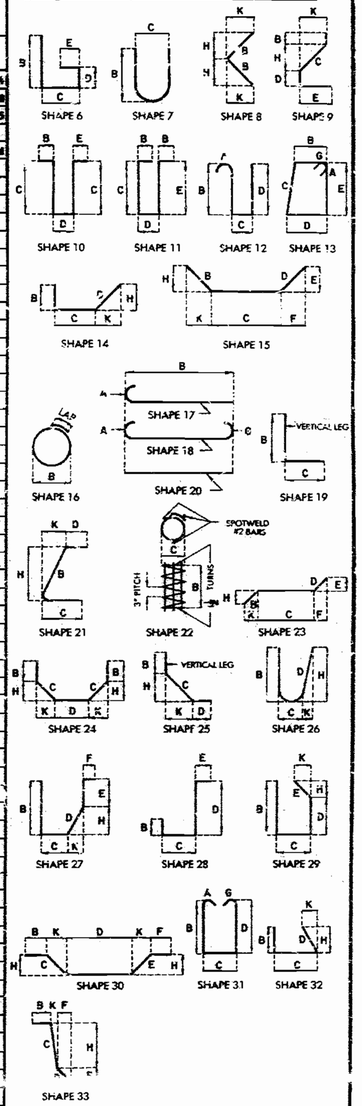

BENDING DIAGRAMS

STATE	PROJ NO	SHEET NO.
MO.		55

DETAILED Aug. 1988
CHECKED Aug. 1988

Note: This drawing is not to scale. Follow dimensions.

Sheet No. 49 of 49

JACKSON COUNTY

A-2733

FOR INFORMATION ONLY

MISSOURI HIGHWAY AND TRANSPORTATION COMMISSION

STATE	PROJ. NO	SHEET NO.
MO.	DE-0031 (803)	7
SEC./SUR 22	TWP. 48	RGE. 33

Job No. 4-U-71-2D

FINAL PLAN

FINAL PLANS

BRIDGE NO. A-2733
OVER
MANCHESTER TRAFFICWAY, BLUE RIVER, BURLINGTON NORTHERN RR, N.B. DETOUR, BLUE RIVER ROAD & NORTH OUTER ROAD

SUBSTRUCTURE CONTRACT

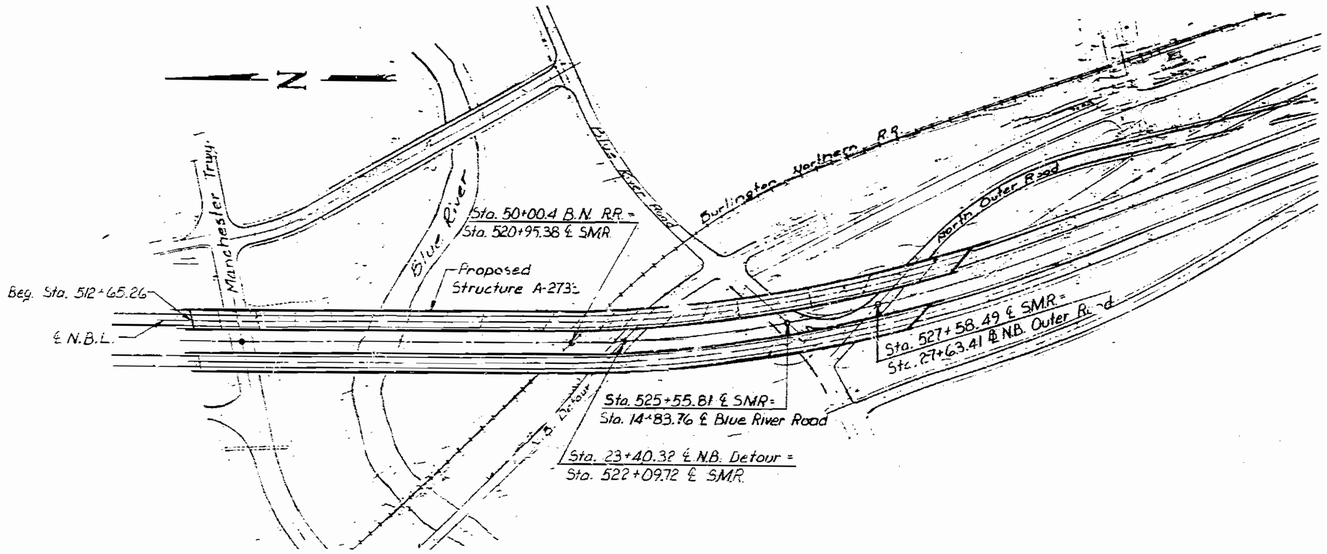

LOCATION SKETCH

INDEX OF DRAWINGS

1 INDEX OF DRAWINGS
2 PART PLAN & ELEVATION
3 PART PLAN & ELEVATION
4 PART PLAN & ELEVATION
5 PART PLAN & ELEVATION
6 QUANTITIES, GEN. NOTES, PILE DATA & BORINGS
7 BORINGS
8 BORINGS
9 BORINGS
10 SUBSTRUCTURE LAYOUT
11 SUBSTRUCTURE LAYOUT
12 END BENT NO. 1
13 DEADMAN ANCHORAGE SYSTEM
14 INT. BENT NO. 2
15 INT. BENT NO. 3
16 INT. BENT NO. 4
17 INT. BENT NO. 5
18 INT. BENT NO. 6 & 7
19 INT. BENT NO. 6 & 7
20 INT. BENT NO. 8
21 INT. BENT NO. 8
22 INT. BENT NO. 9
23 INT. BENT NO. 10
24 INT. BENT NO. 9 & 10
25 INT. BENT NO. 11
26 INT. BENT NO. 12
27 INT. BENT NO. 12
28 INT. BENT NO. 13
29 INT. BENT NO. 13
30 INT. BENT NO. 14
31 INT. BENT NO. 15
32 INT. BENT NO. 16
33 INT. BENT NO. 17
34 INT. BENT NO. 17
35 INT. BENT NO. 18
36 INT. BENT NO. 19
37 INT. BENT NO. 20
38 END BENT NO. 21
39 END BENT NO. 21
40 END BENT NO. 21
41 DEADMAN ANCHORAGE SYSTEM
42 BEARING ALIGNMENT & EARTHQUAKE RESTRAINERS
43 BAR LIST
44 BAR LIST
45 BAR LIST
46 BAR LIST
47 BAR LIST
48 BAR LIST
49 BAR LIST

B.M. TBM 2 Elev. 788.96 "+" on NE top flange bolt on fire hydrant at NW cor. Blue River Rd. and S.B. Hickman Mills Dr

BRIDGE (SEE ABOVE)

STATE ROAD SOUTH MIDTOWN ROADWAY

IN KANAS CITY

PROJECT NO. DE-0031 (803) STA. 512 + 65.26 (N.B.L.)

JOB NO. 4-U-71-2D RTE. 71 (NB.L.)

JACKSON COUNTY

DATE 9/14/88

STD. 611.60
STD. 706.35
A-2733

DESIGNED FEB 1988
DETAILED AUG 1988
CHECKED AUG 1988

Note: This drawing is not to scale. Follow dimensions.

Sheet No. 1A of 49.

T48 S36

STATE	PROJ. NO	SHEET NO
MO.	DE-0031(803)	8

Job No. 4-4-71-20

FINAL PLANS

(61'-82-82') Prestressed Concrete I-Girder Spans

(4@82') Prestressed Concrete I-Girder Spans

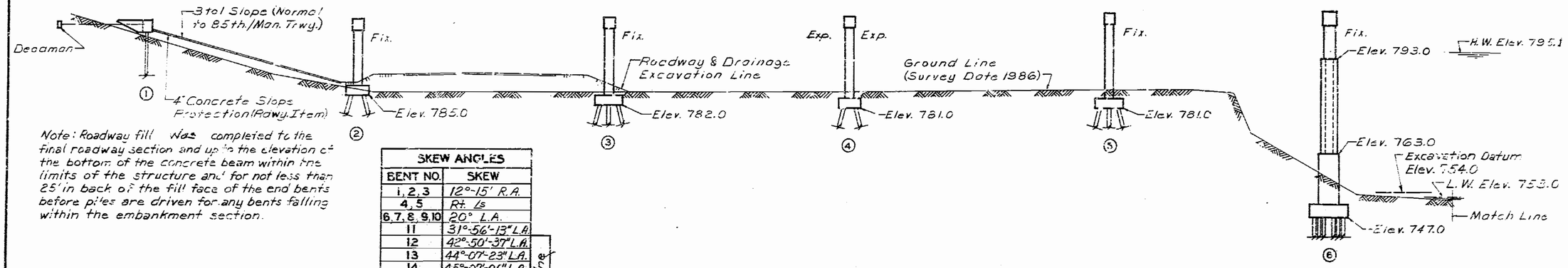

Note: Roadway fill was completed to the final roadway section and up to the elevation of the bottom of the concrete beam within the limits of the structure and for not less than 25' in back of the fill face of the end bents before piles are driven for any bents falling within the embankment section.

SKEW ANGLES	
BENT NO.	SKEW
1, 2, 3	12°-15' R.A.
4, 5	Rt Ls
6, 7, 8, 9, 10	20° L.A.
11	31°-56'-13" L.A.
12	42°-50'-37" L.A.
13	44°-07'-23" L.A.
14	45°-07'-06" L.A.
15	46°-54'-21" L.A.
16	28°-11'-36" L.A.
17, 18	Radial
19	30°-11'-18" L.A.
20	55°-24'-52" L.A.
21	56°-30'-09" L.A.

To Radial Line

Note: Skew angles are measured at ℄ N.B.L..

PART GENERAL ELEVATION

Note: A minimum Lateral Clearance of 2'-0" from Pavement edge was maintained during construction.
A minimum Lateral Clearance of 12'-0" from the centerline of track to nearest temporary construction false work was maintained during construction.

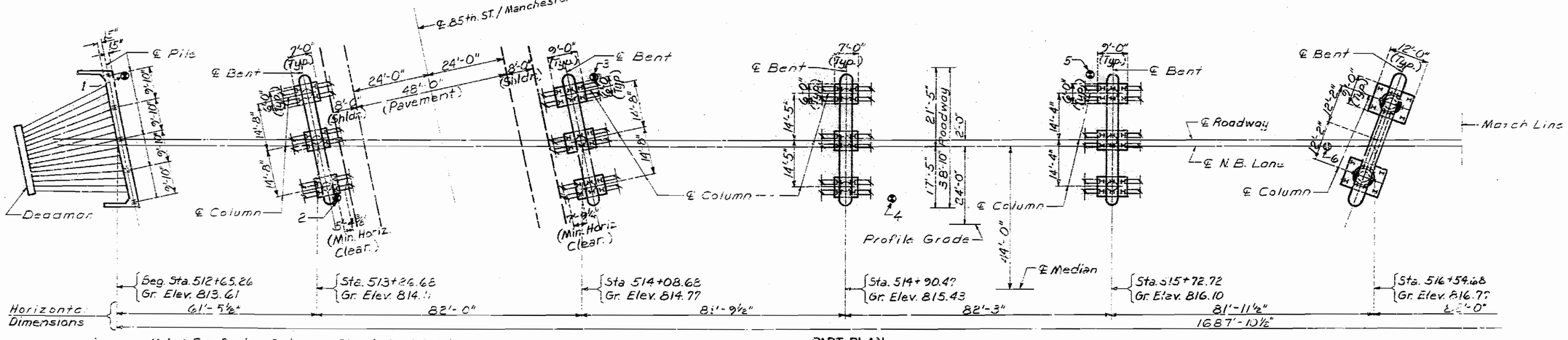

PART PLAN

Note: For Boring Data see Sheets No. 6, 7, 8 & 9.
Indicates location of boring.
For General Notes, Estimated Quantites and Pile Data, see Sheet No. 6.
Stations shown are along ℄ Median.
Grade Elevations shown are along ℄ N.B. Lane.

DETAILED AUG. 1988
CHECKED AUG. 1988

Note: This drawing is not to scale. Follow dimensions.

FOR INFORMATION ONLY

STATE	PROJ. NO.	SHEET NO.
MO.	DE-0031 (803)	9

Job No. 4-U-71-20

FINAL PLANS

(82'-82'-63'-63'-63') Prestressed Concrete I-Girder Spans

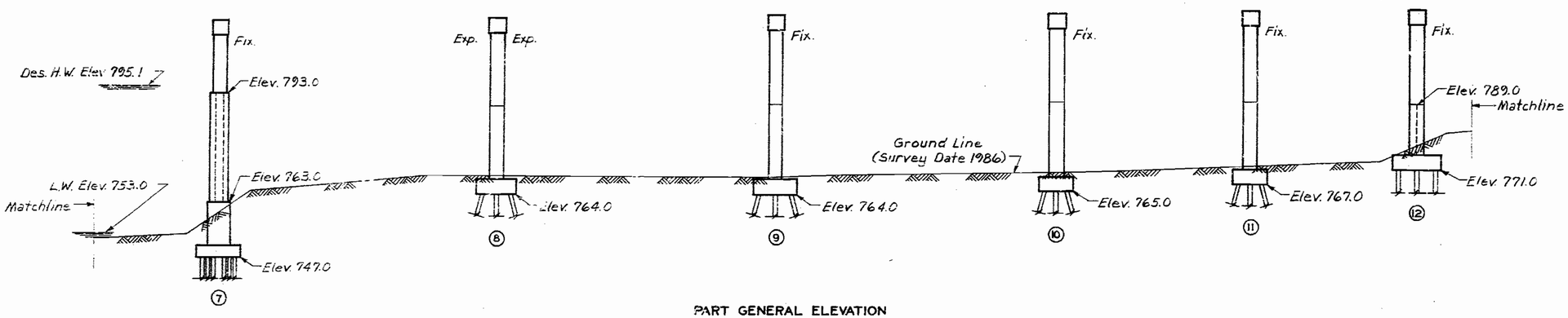

PART GENERAL ELEVATION

S.M.R. CURVE DATA

P.I. Sta. = 526+15.81
Δ = 22°-06'-46"
D = 2°-00'-00"
R = 2864.79'
L = 1105.64'
T = 559.79'
E = 54.18'
S.E. = Varies

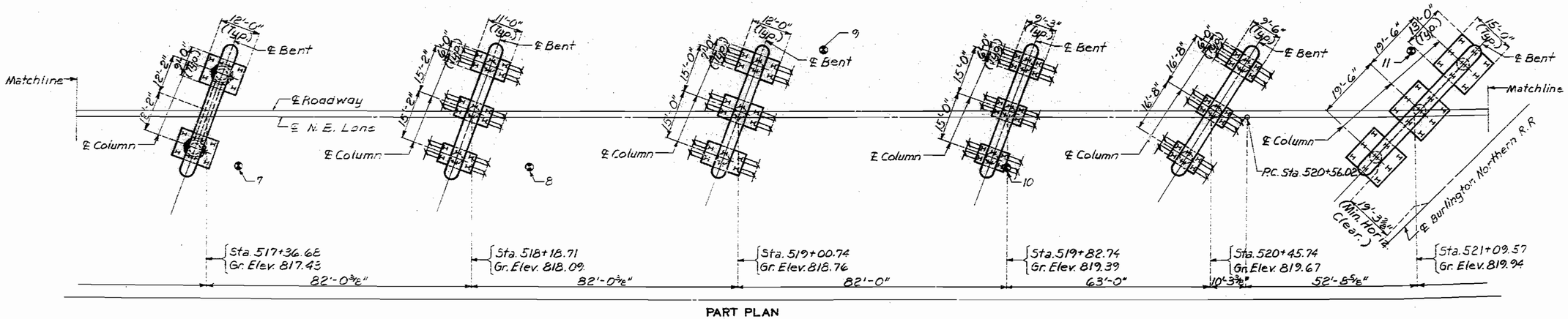

PART PLAN

DETAILED AUG. 1988
CHECKED AUG. 1988

Note: This drawing is not to scale. Follow dimensions.

Sheet No. 3 A of 49.

JACKSON COUNTY

A-2733

STATE	PROJ. NO.	SHEET NO.
NO.	DE-0031(803)	10

Job No. 4-U-71-2D

FINAL PLANS

(49'-88'-71'-71') Prestressed Concrete I-Girder Spans

P.I. Sta. 525.30
Elev. 824.23

+0.81% -1.866%

900' V.C.

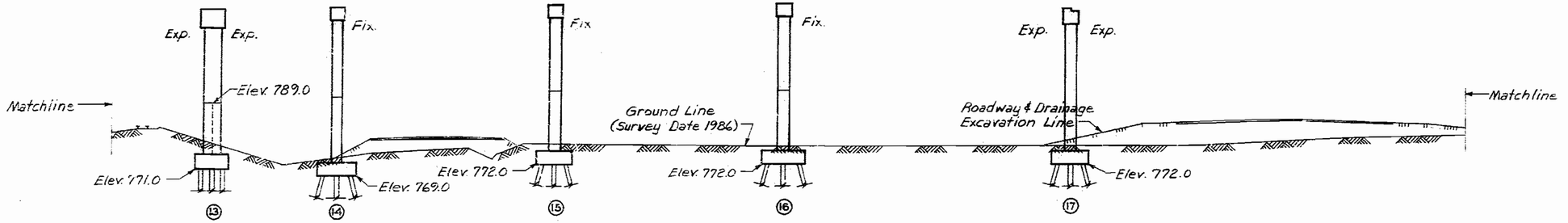

PART GENERAL ELEVATION

N.B. DETOUR CURVE DATA

P.I. Sta. = 21+83.94
Δ = 25°-23'-41"
D = 6°-00'-00"
R = 954.93'
L = 423.25'
T = 215.16'
E = 23.94'

BLUE RIVER RD. CURVE DATA

P.I. Sta. = 14+16.04
Δ = 23°-30'-42"
D = 7°-00'-00"
R = 818.51'
L = 335.88'
T = 170.34'
E = 17.54'

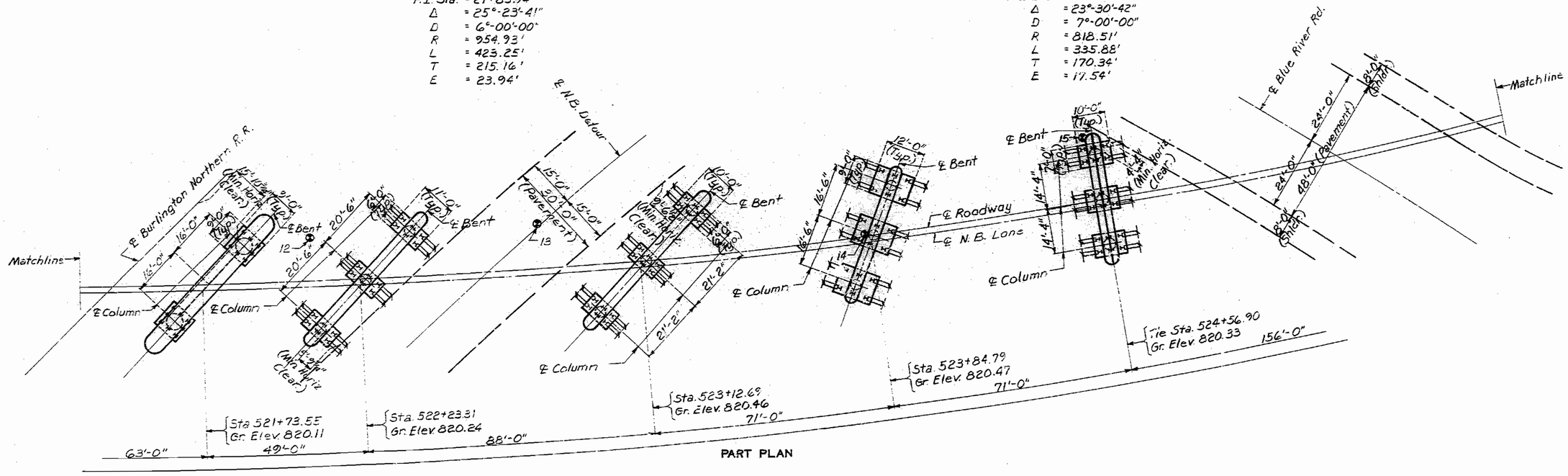

PART PLAN

DETAILED AUG. 1988
CHECKED AUG. 1988

Note: This drawing is not to scale. Follow dimensions.

Sheet No. 4A of 49

JACKSON COUNTY

A-2733

FOR INFORMATION ONLY

STATE	PROJ. NO.	SHEET NO.
MO.	DE-0031 (R03)	11

Job No. 4-u-91-2D

FINAL PLANS

(156'-135'-135'-72') Continuous Composite Plate Girder Spans

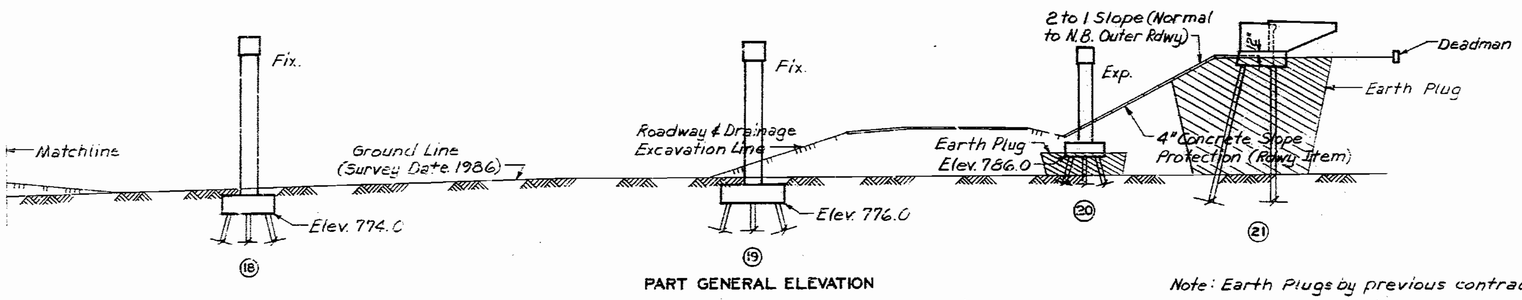

PART GENERAL ELEVATION

Note: Earth Plugs by previous contract.

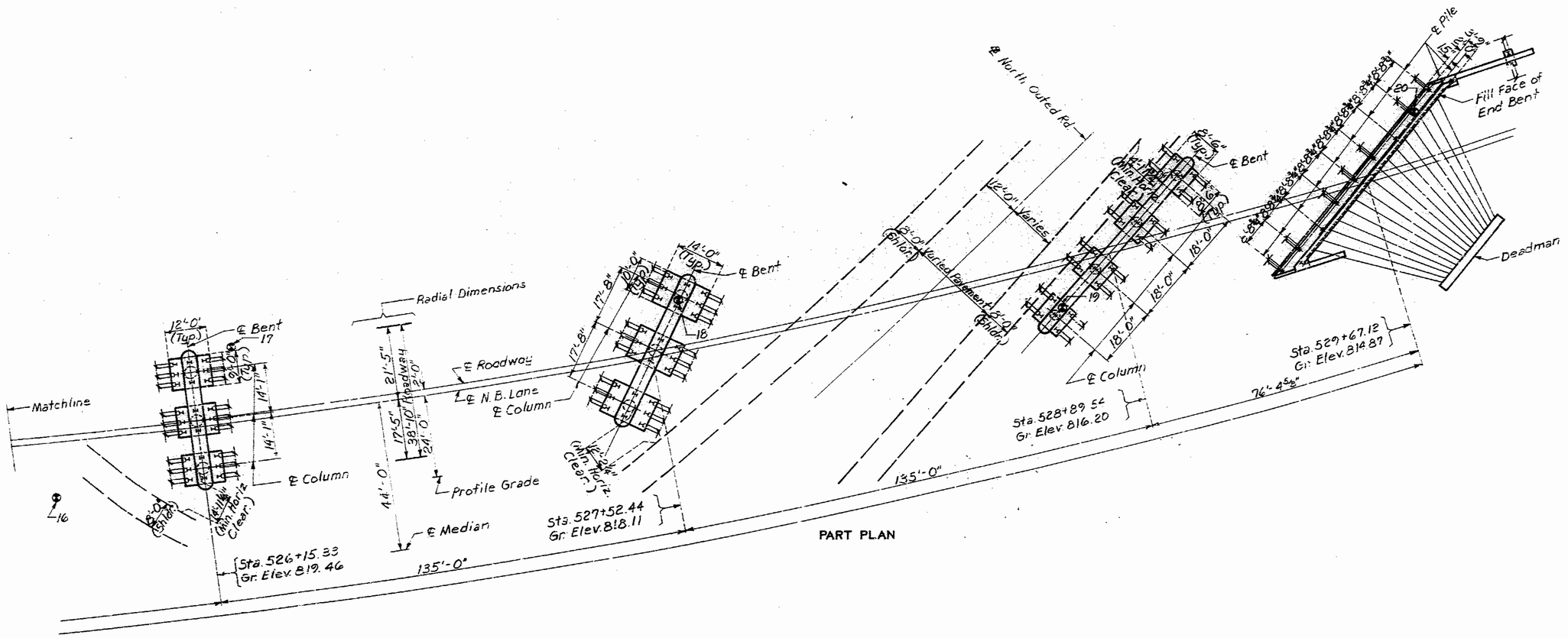

PART PLAN

DETAILED AUG. 1988
CHECKED AUG. 1988

Note: This drawing is not to scale. Follow dimensions.

Sheet No. 5A of 49.

JACKSON COUNTY

A-2733

FINAL PLANS

STATE	PROJ. NO.	SHEET NO.
MO.	OE-0031 (803)	12

Job No. 4-U-71-20

GENERAL NOTES:

DESIGN SPECIFICATIONS: A.A.S.H.T.O. - 1983 AND INTERIMS THRU 1987
LOAD FACTOR DESIGN

DESIGN LOADING:
HS20-44 MODIFIED 24,000# TANDEM AXLE
35#/SQ. FT. FUTURE WEARING SURFACE
EARTH 120#/CU. FT., EQUIVALENT FLUID PRESSURE 49#/CU. FT.(BT. #1) 29#/CU. FT.(BT. #2)
FATIGUE STRESS (PLATE GIRDERS)-CASE II
SUPERSTRUCTURE (PRESTRESSED GIRDERS) SIMPLY SUPPORTED, NON-COMPOSITE FOR DEAD LOAD.
CONTINUOUS COMPOSITE FOR LIVE LOAD.

DESIGN UNIT STESSES:
CLASS B CONCRETE (SUBSTRUCTURE) F'C = 3,000 PSI.
REINFORCING STEEL (GRADE 60) FY = 60,000PSI.
STEEL PILE FB = 9,000 PSI.

REINFORCING STEEL:
MINIMUM CLEARANCE TO REINFORCING STEEL \\/S ... 1 1/2", UNLESS OTHERWISE SHOWN.
ALL REINFORCING BARS IN TOP OF SUBSTRUCTURE BEAMS OR LAPS were SPACED TO CLEAR ANCHOR BOLTS FOR BEARINGS BY AT LEAST 1/2".

FINAL QUANTITIES

ITEM		TOTAL
CLASS 1 EXCAVATION	CU. YD.	1893.0
CLASS 2 EXCAVATION	CU. YD.	1865
STRUCTURAL STEEL PILES (10 IN.)	LIN. FT.	1858
STRUCTURAL STEEL PILES (12 IN.)	LIN. FT.	6086
PRE-BORE FOR PILING	LIN. FT.	410
CLASS B CONCRETE	CU. YD.	2204.9
DEADMAN ANCHORAGE ASSEMBLY	EACH	2
REINFORCING STEEL	LB.	302280
REINFORCING STEEL (EPOXY COATED)	LB.	3550
Class 1 Excavation +2.5%	CU. YD.	36.0

BORING DATA

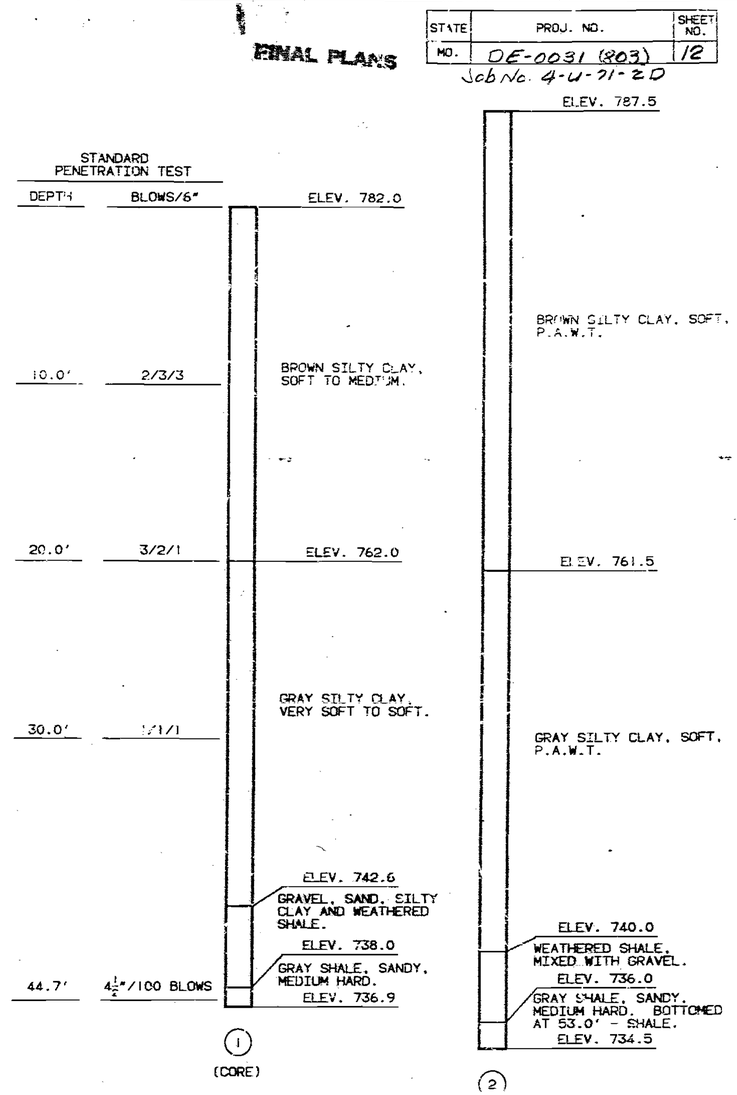

PILE DATA

BENT NO.	1	2	3	4	5	6	7	8	9	10	11	12	13	14	15	16	17	18	19	20	21 BEAM	21 WING
PILE TYPE AND SIZE	HP12X53	HP12X53	HP10X42	HP12X53	HP10X42	HP12X53	HP12X53	HP10X42	HP10X42	HP10X42	HP10X42	HP10X42	HP12X53	HP10X42	HP12X53	HP10X42	HP10X42	HP12X53	HP10X42	HP12X53	HP12X53	HP10X42
NUMBER	5	12	18	12	18	20	20	18	18	18	18	24	16	18	18	18	18	24	24	20	11	2
APPROXIMATE LENGTH FT.	69	51	45	47	46	14	14	30	31	30	32	35	35	34	38	37	37	42	43	49	71	68
DESIGN BEARING TONS	62	59	46	62	47	68	68	53	54	52	49	51	62	54	58	50	55	63	53	57	61	8
HAMMER ENERGY REQ'D FT. LBS	13,800	13,900	10,800	14,600	11,000	15,200	15,200	12,400	12,600	12,200	11,500	11,300	13,800	12,600	13,600	11,700	13,000	14,800	12,400	13,400	16,300	11,900

MINIMUM ENERGY REQUIREMENT OF HAMMER IS BASED ON PLAN LENGTH AND DESIGN BEARING VALUE OF PILES.
ALL PILES were DRIVEN TO PRACTICAL REFUSAL.
PREBORE FOR PILES AT BENTS NO. 20 AND 21 TO ELEVATIONS 781.0 AND 782.0, RESPECTIVELY.

DETAILED AUG. 1988
CHECKED AUG. 1988

NOTE: THIS DRAWING IS NOT TO SCALE. FOLLOW DIMENSIONS.

SHEET NO. 6A OF 49

Revised 5/3/89

JACKSON COUNTY

A-2733

153 307

STATE	PROJ. NO	SHEET NO.
MO.	DE-0031 (803)	13

Job No. 4-u-71-20

FINAL PLANS

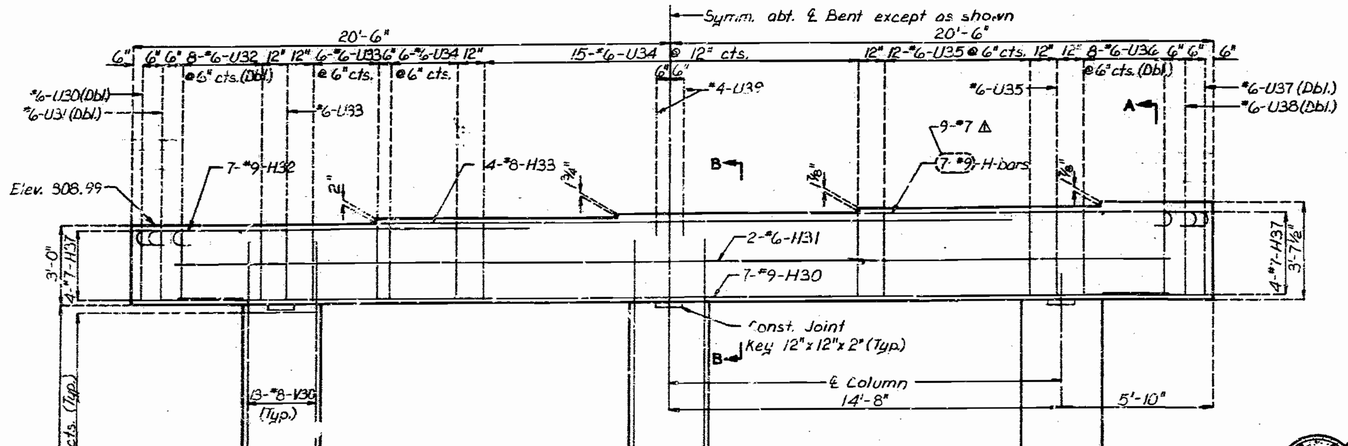

ELEVATION

⚠ H34, H35 & H36 bars shall be evenly distributed at top of beam.

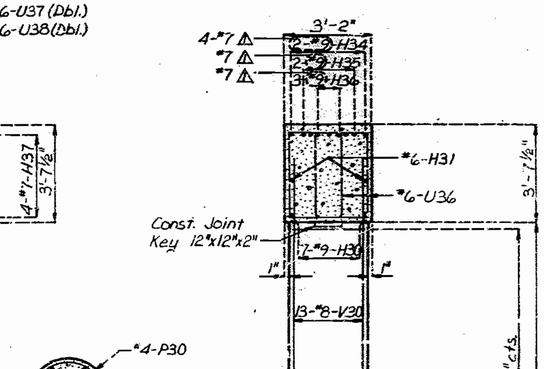

SECTION A-A

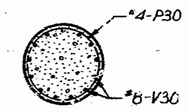

SECTION C-C

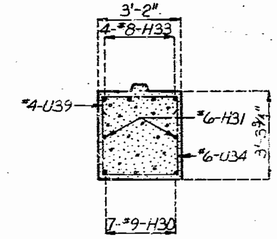

SECTION B-B

Note : For detail of key, see Sheet No. 14.

Note : For detail of Steel Pile Splice see Sheet No. 12.
All piles shall be HP10x42.

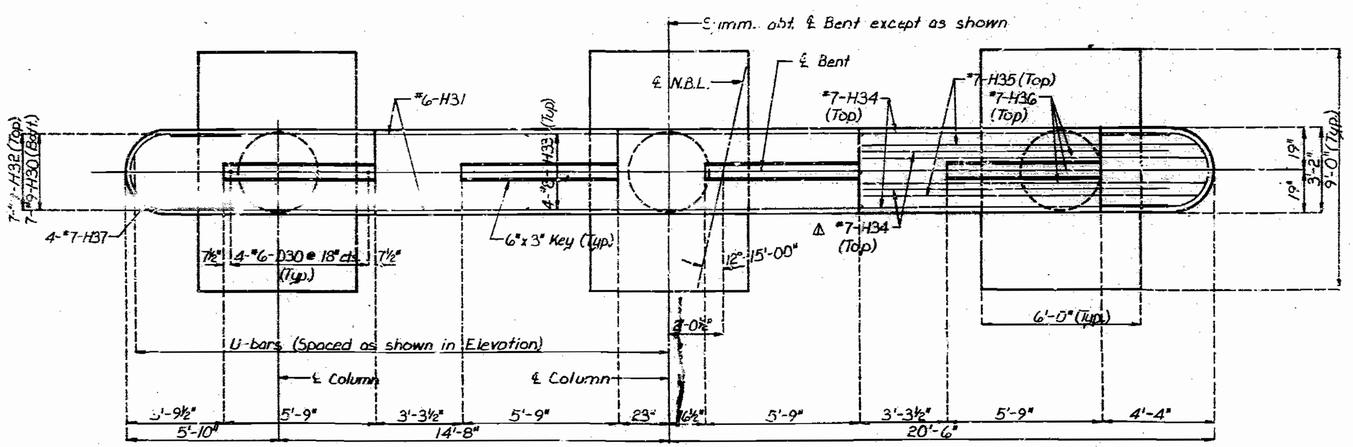

PLAN

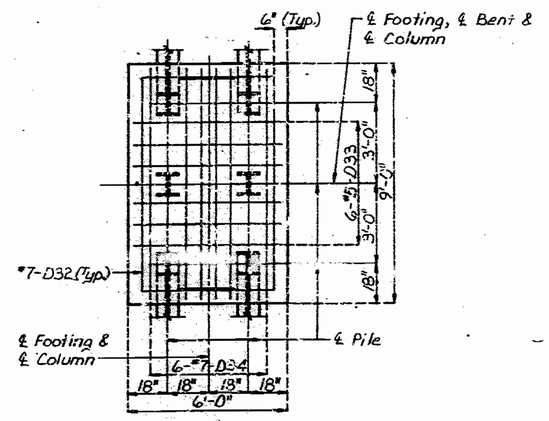

PLAN OF FOOTING

DETAILED June 1988
CHECKED JULY 1988

DETAILS OF INTERMEDIATE BENT NO. 3

Note: This drawing is not to scale. Follow dimensions.

Sheet No. 15A of 49 ⚠ Revised 5/3/89

JACKSON COUNTY

A-2733

STATE	PROJ. NO.	SHEET NO.
MO.	DE-003K(303)	14

Job No. 4-U-71-28

FINAL PLANS

* See Earthquake Restrainers Sheet No. 42.

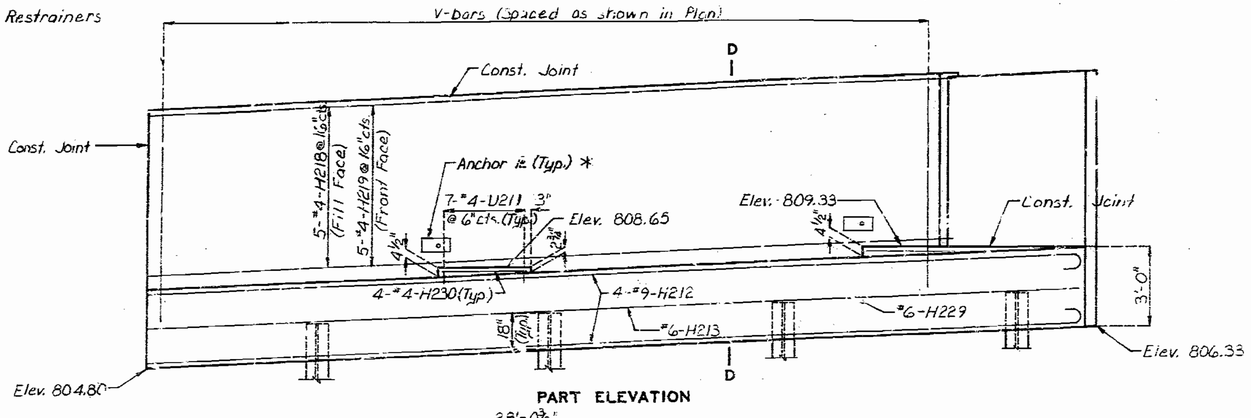

PART ELEVATION

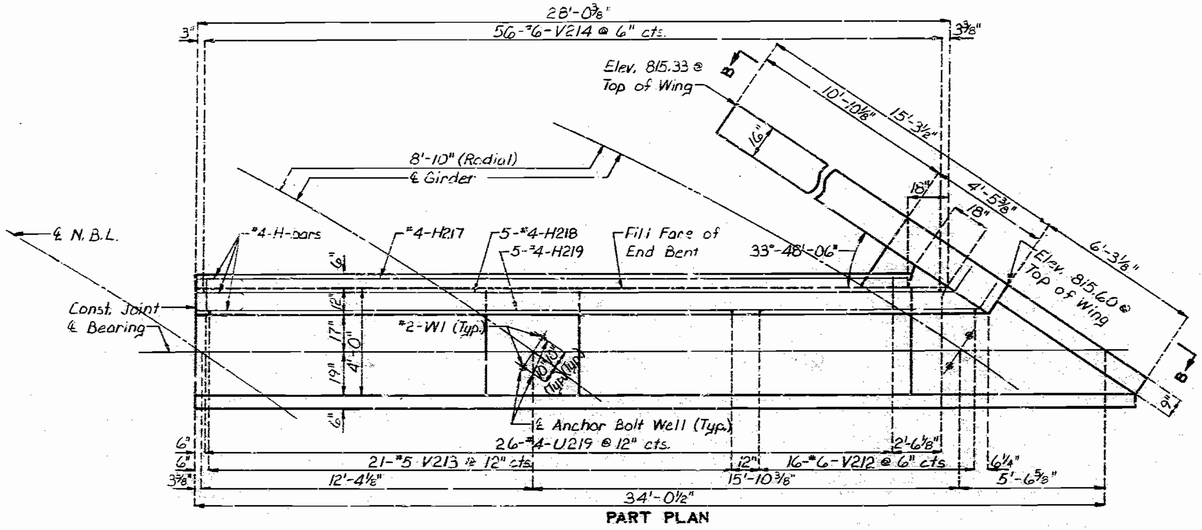

PART PLAN

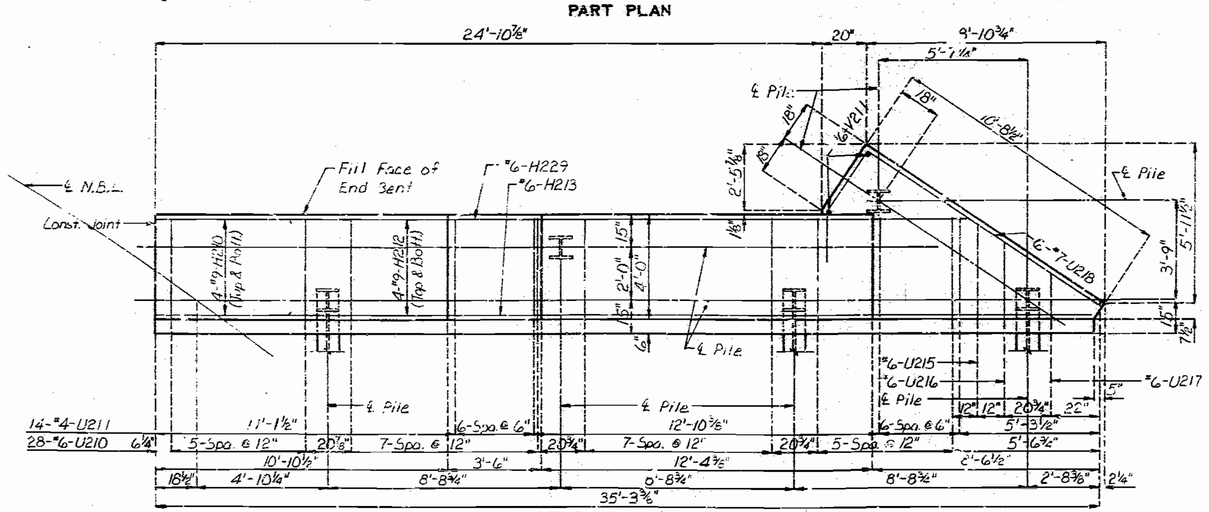

PART PLAN OF BEAM

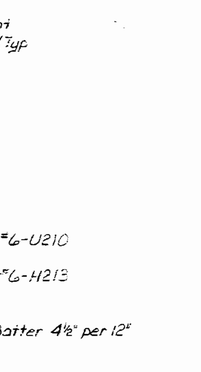

SECTION D-D

Note : For Section Thru Wings and Elevation B-B see Sheet No. 40.

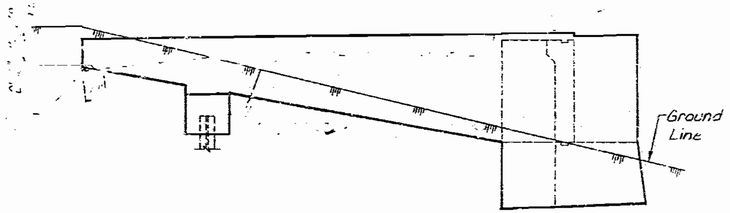

DETAILED June 1965
CHECKED Aug. 1965

DETAILS OF END BENT NO. 21

Note: This drawing is not to scale. Follow dimensions.

Sheet No. 39A of 43

JACKSON COUNTY

A-2733

FOR INFORMATION ONLY

A27331, Sht. 69

COMPLETE BILL OF REINFORCING STEEL

NO. REQD.	MARK NO. SIZE	MARK NO. MARK	LOCATION	EPOXY (E)	SHAPE NO.	STIRRUP (S)	SUBSTR. (X)	VARIES (V)	NO. EACH	DIMENSIONS B FT.	B IN.	C FT.	C IN.	D FT.	D IN.	E FT.	E IN.	F FT.	F IN.	H FT.	H IN.	K FT.	K IN.	NOMINAL LENGTH FT.	NOMINAL LENGTH IN.	ACTUAL LENGTH FT.	ACTUAL LENGTH IN.	WEIGHT LBS.
-	-		SUBSTRUCTURE																									
			END BT.NO 1																									
2	6F1		WING BRACE		15	X				14.	250	3	11.000	14.	250	11.000		9.000		11.000		9.000		4	4	6	2	19
2	6F2		WING BRACE		15	X				14.	250	4	9.000	14.	250	9.000		11.000		9.000		11.000		7	2	7	1	21
4	6H1		BEAM		20	X	V	1	4	2.	000													4	2	4	2	
			INCR = 2.375 IN						4	9.	000													4	9	4	9	27
4	6H2		BEAM		20	X			22	3.	000													22	3	22	3	134
4	6H3		BEAM		20	X			23	0.	000													23	0	23	0	138
6	6H4		BEAM		20	X			42	2.	000													42	2	42	2	380
8	6H5		WING		20	X	V	2	4	3.	000													4	3	4	3	
			INCR = 21.000 IN						9	6.	000													9	6	9	6	83
8	6H6		WING		20	X	V	2	4	0.	000													4	0	4	0	
			INCR = 21.625 IN						9	5.	000													9	5	9	5	81
2	6T1		WING		15	X			3	4.	750	9	9.000								14.000	3	1.500	13	2	13	2	40
2	6T2		WING		15	X			3	4.	875	8	9.500								13.500	3	2.250	12	2	12	2	37
14	9U1		BEAM		16	S	X					5	4.000	2	3.625									13	0	12	9	186
14	3U2		BEAM		10	S	X					4	10.000	2	3.625									12	0	11	9	172
9	4U3		BEAM		15	S	X		2	3.	625	3	0.625	2	3.625	3	0.625							11	6	11	3	48
7	4U4		BEAM		13	S	X		2	3.	625	2	9.000	2	3.625	2	9.000							10	10	10	7	49
5	4U5		BEAM		10	S	X					3	0.625	2	3.625									8	5	8	3	26
2	4U6		BEAM		10	S	X					2	10.875	2	3.625									8	1	7	11	11
5	4U7		BEAM		10	S	X						6.000	2	3.625									3	4	3	2	11
																												4 ⚠
2	5V1		BEAM		20	X			5	4.	000													5	4	5	4	11
2	5V2		BEAM		20	X			4	8.	000													4	8	4	8	10
14	4V3		WING		20	X	V	2	2	9.	000													2	9	2	9	
			INCR = 5.125 IN						9	4.	000													9	4	9	4	85
4	6V4		WING		20	X			5	8.	000													5	8	5	8	34
12	6V5		WING		26	X	V	2	2	10.	000													2	10	2	10	
			INCR = 4.625 IN						4	9.	000													4	9	4	9	68
4	6V6		WING		20	X			5	1.	000													5	1	5	1	33
			INT.BT.NO 2																									
16	6D20		BEAM		29	X				21.	000													21		21		42
39	6B21		FOOTING & COL.		20	X			6	4.	000													6	4	6	4	499
12	6B22		F. RING		30	X						3	3.000	16.	000									7	10	9	6	139
12	6B23		FOOTING		10	X						3	9.000	16.	000									8	10	8	6	153
7	6B20		BEAM		20	X			37	7.	000													37	7	37	7	202
2	6H21		BEAM		20	X			37	7.	000													37	7	37	7	113
7	6H22		BEAM		17	X			16	2.	000													17	1	17	1	319
4	6H23		BEAM		20	X			23	7.	000													23	7	23	7	252
2	6H24		BEAM		17	X			11	6.	000													12	5	12	5	66
2	6H25		BEAM		17	X			12	7.	000													13	6	13	6	72
3	6H26		BEAM		17	X			12	10.	000													13	9	13	9	110
8	7H27		BEAM		7	X			4	1.	000	2	9.500											9	8	9	8	158
54	6P20		COL.		16	X			2	9.	000													9	8	9	6	343
1	6H20		BEAM		13	S	X			19.	625	2	9.000	19.	625	2	9.000							10	1	9	7	14
1	6H21		BEAM		13	S	X		2	6.	500	2	9.000	2	6.500	2	9.000							11	11	11	9	17

COMPLETE BILL OF REINFORCING STEEL

NO. REQD.	MARK NO. SIZE	MARK NO. MARK	LOCATION	EPOXY (E)	SHAPE NO.	STIRRUP (S)	SUBSTR. (X)	VARIES (V)	NO. EACH	DIMENSIONS B FT.	B IN.	C FT.	C IN.	D FT.	D IN.	E FT.	E IN.	F FT.	F IN.	H FT.	H IN.	K FT.	K IN.	NOMINAL LENGTH FT.	NOMINAL LENGTH IN.	ACTUAL LENGTH FT.	ACTUAL LENGTH IN.	WEIGHT LBS.
1	6U22		BEAM		13	S	X			2	10.625	2	9.000	2	10.625	2	9.000							12	7	12	1	18
14	6U23		BEAM		13	S	X			2	11.000	2	9.000	2	11.000	2	9.000							12	8	12	2	256
21	6U24		BEAM		13	S	X			2	11.000	2	10.875	2	11.000	2	10.875							12	11	12	8	394
20	6U25		BEAM		13	S	X			2	11.000	3	2.500	2	11.000	3	2.500							13	7	13	1	392
1	6U26		BEAM		13	S	X				19.625	3	2.500		19.625	3	2.500							13	8	10	6	14
1	6U27		BEAM		13	S	X			2	6.500	3	2.500	2	6.500	3	2.500							12	10	12	4	19
1	6U28		BEAM		13	S	X			2	10.625	3	2.500	2	10.625	3	2.500							13	6	13	0	20
2	4U29		BEAM		10	S	X						6.000	2	11.000									3	11	3	9	9
39	8V20		COL.		20		X			19.	8.000													19	8	19	8	2648
			INT.BT.NO 3																									
16	6B30		BEAM		20		X				21.000														21		21	42
39	8B31		FOOTING & COL.		20		X			6	4.000													6	4	6	4	499
6	7B32		FOOTING		10		X					3	11.000	8	0.000									15	10	15	6	199
18	9B33		FOOTING		26		X			5	8.000													9	8	9	8	166
18	7B34		FOOTING		20		X			8	8.000													3	8	8	8	319
7	9H30		BEAM		20		X			37	10.000													37	10	37	10	900
2	6H31		BEAM		20		X			37	10.000													37	10	37	10	114
7	9H32		BEAM		17		X			19	6.000													19	3	19	3	456
4	9H33		BEAM		20		X			23	7.000													23	7	23	7	252
2	7H34		BEAM		17		X			11	4.000													12	2	12	7	102 ⚠3
2	7H35		BEAM		17		X			32	8.000													13	6	13	6	92
3	7H36		BEAM		17		X			12	11.000													13	9	13	9	84
8	7H37		BEAM		7		X			4	1.000	2	9.500											9	8	9	8	158
63	9P30		COL.		36		X			2	9.000													9	6	9	6	400
2	6U30		BEAM		13	S	X			19.	500	2	9.000	19.	500	2	9.000							9	5	9	11	27
2	6U31		BEAM		13	S	X			21.	375	2	9.000	21.	375	2	9.000							10	4	9	11	30
16	6U32		BEAM		13	S	X			23.	375	2	9.000	23.	375	2	9.000							10	9	10	3	246
7	6U33		BEAM		12		X			2	11.000	2	9.000	2	11.000	2	9.000							12	11	12	2	128
21	6U34		BEAM		13	S	X			2	11.000	2	11.000	2	11.000	2	11.000							13	0	12	6	359
1	6U35		BEAM		13	S	X			2	11.000	3	2.625	2	11.000	3	2.625							13	7	13	1	255
16	6U36		BEAM		13	S	X			23.	375	3	2.625	23.	375	3	2.625							11	8	11	2	368
2	6U37		BEAM		13	S	X			19.	500	3	2.625	19.	500	3	2.625							10	4	9	10	35
2	6U38		BEAM		13	S	X			23.	375	3	2.625	21.	375	3	2.625							11	4	10	10	33
2	4U39		BEAM		36	S	X						6.000	2	12.000									3	11	3	9	5
99	8V30		COL.		20		X			23	6.000													23	4	23	4	2630
			INT BT NO 4																									
39	8D41		FOOTING & COL.		20		X			6	4.000													6	4	6	4	499
12	6D42		FOOTING		10		X					3	3.000	16.	000									7	10	7	6	139
12	6D43		FOOTING		10		X					3	9.000	16.	000									8	10	8	6	159
9	7H40		BEAM		20		X			34	10.000													34	10	34	10	676
2	6H41		BEAM		20		X			36	10.000													36	10	36	10	111
9	7H42		BEAM		17		X			14	11.000													15	9	15	9	296
5	7H43		BEAM		20		X			21	10.000													21	10	21	10	210

STATE	PROJ NO	SHEET NO
MO	DE-0031(803)	15

Job No 44-71-20

SHAPE 6 · SHAPE 7 · SHAPE 8 · SHAPE 9

SHAPE 10 · SHAPE 11 · SHAPE 12 · SHAPE 13

SHAPE 14 · SHAPE 15

SHAPE 16 · SHAPE 17 · SHAPE 18 · SHAPE 20 · SHAPE 19

SHAPE 21 · SHAPE 22 · SHAPE 23

SHAPE 24 · SHAPE 25 · SHAPE 26

SHAPE 27 · SHAPE 28 · SHAPE 29

SHAPE 30 · SHAPE 31 · SHAPE 32

SHAPE 33

BENDING DIAGRAMS

REVISED JUNE 1988

STD. 90.8 MAY 1974

6d FOR #3 THRU #5
12d FOR #6 OR 2½" MIN.

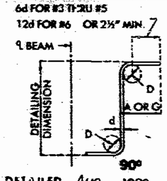

6d OR 2½" MIN.

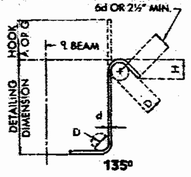

DETAILED Aug. 1988
CHECKED Aug. 1988

STIRRUP HOOK DIMENSIONS

BAR SIZE	D (IN.)	GRADES 40-50-60 KSI 90° HOOK A OR G	135° HOOK A OR G	135° HOOK APPROX. H
#3	1½"	4"	4"	2½"
#4	2"	4½"	4½"	3"
#5	2½"	6"	5½"	3¾"
#6	4½"	12"	7¾"	4½"

NOTE: UNLESS OTHERWISE NOTED DIAMETER "D" IS THE SAME FOR ALL BENDS AND HOOKS ON A BAR.

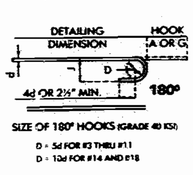

SIZE OF 180° HOOKS (GRADE 40 KSI)
D = 5d FOR #3 THRU #11
D = 10d FOR #14 AND #18

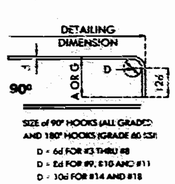

SIZE of 90° HOOKS (ALL GRADES) AND 180° HOOKS (GRADE 60 KSI)
D = 6d FOR #3 THRU #8
D = 8d FOR #9, #10 AND #11
D = 10d FOR #14 AND #18

BEND HOOK DIMENSIONS

BAR SIZE	D (IN.)	180° HOOKS ALL GRADES A OR G	180° HOOKS ALL GRADES J	90° HOOKS ALL GRADES A OR G
#3	2½"	5"	3"	6"
#4	3"	6"	4"	8"
#5	3¾"	7"	5"	10"
#6	4½"	8"	6"	12"
#7	5¼"	10"	7"	14"
#8	6"	11"	8"	16"
#9	9½"	15"	11¾"	19"
#10	10¾"	17"	13¼"	22"
#11	12"	19"	14¾"	2'-0"
#14	18¼"	2'-3"	21¼"	2'-7"

NOTES:

ALL STANDARD HOOKS AND BENDS OTHER THAN 180 DEG. TO BE BENT WITH SAME PROCEDURE AS FOR 90 DEG. STD. HOOKS.

HOOKS AND BENDS SHALL BE IN ACCORDANCE WITH THE PROCEDURES AS SHOWN ON THIS SHEET.

E - EPOXY COATED REINFORCEMENT.
S - STIRRUP
X - BAR IS INCLUDED IN SUBSTRUCTURE QUANTITIES.
V - BAR DIMENSIONS VARY IN EQUAL INCREMENTS BETWEEN DIMENSIONS SHOWN ON THIS LINE AND THE FOLLOWING LINE.
NO. EA. - NUMBER OF BARS OF EACH LENGTH.
NOMINAL LENGTHS - ARE BASED ON OUT TO OUT DIMENSIONS SHOWN IN BENDING DIAGRAMS AND ARE LISTED FOR FABRICATORS USE. (NEAREST INCH)
ACTUAL LENGTHS - ARE MEASURED ALONG CENTERLINE BAR TO THE NEAREST INCH.
PAYWEIGHTS ARE BASED ON ACTUAL LENGTHS.

Sheet No. 43 of 49

⚠ Revised 5/3/89 JACKSON COUNTY

A-2733

MISSOURI HIGHWAY AND TRANSPORTATION COMMISSION

STATE	PROJ NO	SHEET NO.
MO.		2
SEC. 15 JR 22	TWP. 48N	RGE. 33W

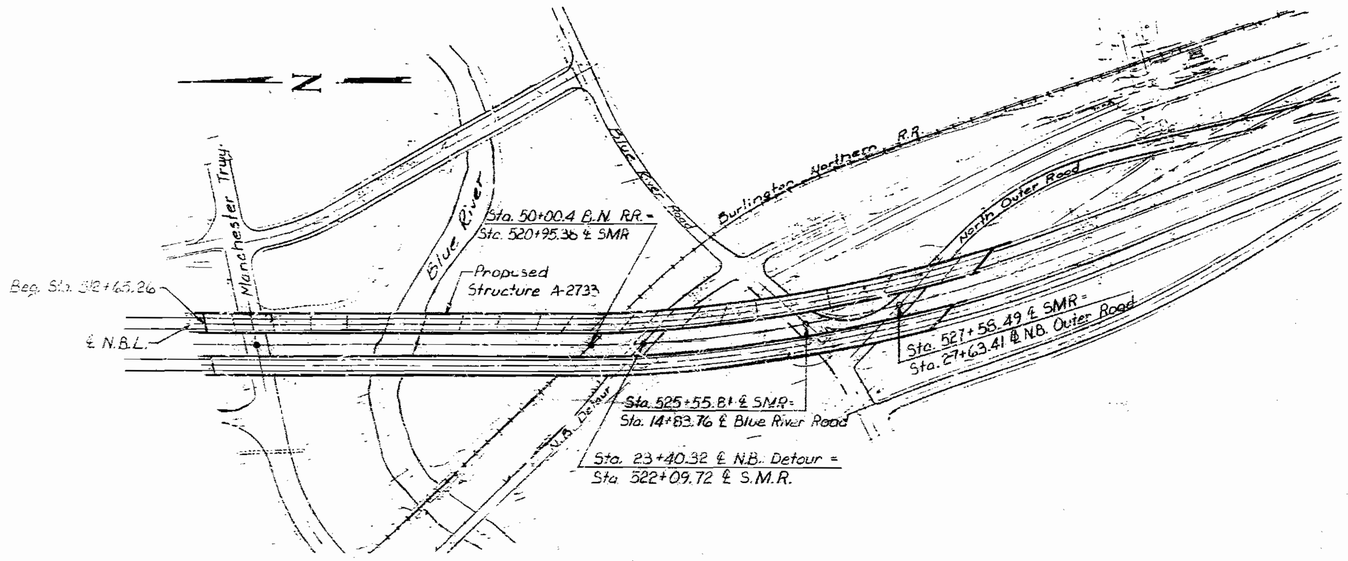

LOCATION SKETCH

BRIDGE NO. A-2733
OVER
MANCHESTER TRAFFICWAY, BLUE RIVER, BURLINGTON NORTHERN RR, N.B. DETOUR, BLUE RIVER ROAD & NORTH OUTER ROAD

SUPERSTRUCTURE CONTRACT

INDEX OF DRAWINGS

1 INDEX OF DRAWINGS
2 PART PLAN & ELEVATION
3 PART PLAN & ELEVATION
4 PART PLAN & ELEVATION
5 PART PLAN & ELEVATION
6 QUANTITIES & GENERAL NOTES
7 END BENT NO. 1
8 BEARING LOCATION
9 BEARING LOCATION
10 BEARING LOCATION
11 BEARING LOCATION
12 END BENT NO. 21
13 VERTICAL DRAIN AT END BENTS
14 EARTHQUAKE RESTRAINERS
15 EARTHQUAKE RESTRAINERS
16 EARTHQUAKE RESTRAINERS & BEARING ALIGNMENT
17 BEARINGS (LAMINATED NEOPRENE)
18 BEARINGS (PTFE)
19 DETAILS OF STEEL DIAPH. (P/S I-GIRDER SPANS)
20 LOCATION OF STEEL DIAPH. (P/S I-GIRDER SPANS)
21 LOCATION OF STEEL DIAPH. (P/S I-GIRDER SPANS)
22 ELEVATION OF P/S GIRDERS - SPAN (1-2)
23 ELEVATION OF P/S GIRDERS - SPANS (2-3),(6-7) & (9-10)
24 ELEVATION OF P/S GIRDERS - SPAN (3-4)
25 ELEVATION OF P/S GIRDERS - SPAN (3-4)
26 ELEVATION OF P/S GIRDERS - SPAN (4-5)
27 ELEVATION OF P/S GIRDERS - SPAN (5-6)
28 ELEVATION OF P/S GIRDERS - SPAN (5-6)
29 ELEVATION OF P/S GIRDERS - SPANS (7-8) & (8-9)
30 ELEVATION OF P/S GIRDERS - SPANS (10-11) & (11-12)
31 ELEVATION OF P/S GIRDERS - SPAN (12-13)
32 ELEVATION OF P/S GIRDERS - SPAN (13-14)
33 ELEVATION OF P/S GIRDERS - SPAN (14-15)
34 ELEVATION OF P/S GIRDERS - SPANS (15-16) & (16-17)
35 ELEVATION OF P/S GIRDERS - SPANS (15-16) & (16-17)
36 ELEVATION OF P/S GIRDERS - SPANS (15-16) & (16-17)
37 DETAILS OF DIAPH. AT BENTS
38 DETAILS OF DIAPH. AT BENTS
39 DETAILS OF DIAPH. AT BENTS
40 PLAN OF STRUCTURAL STEEL
41 ELEVATION OF GIRDERS
42 ELEVATION OF GIRDERS
43 CURVE GIRDER OFFSETS
44 PART LONGITUDINAL SECTION & SUPERELEVATION TRANSITION
45 FIELD SPLICE
46 MISC. STR. STEEL & STEEL DIAPH.
47 STEEL DIAPH., DEAD LOAD DEFLECTION & CAMBER DIAGRAM
48 SLAB CURVE ORDINATES (P/S I-GIRDER SPANS)
49 SLAB CURVE ORDINATES (PLATE GIRDER SPANS)
50 SLAB REINFORCEMENT
51 SLAB REINFORCEMENT
52 SLAB REINFORCEMENT
53 SLAB REINFORCEMENT
54 SLAB REINFORCEMENT
55 SLAB HAUNCHING & CAMBER DIAGRAM (P/S GIRDER)
56 DETAILS OF PRECAST PRESTRESSED PANEL
57 EXP. JT. (BT. NO. 4)
58 EXP. JT. (BT. NO. 8)
59 EXP. JT. (BT. NO. 13)
60 EXP. JT. (BT. NO. 17)
61 EXP. JT. (BT. NO. 21)
62 SLAB DRAINS (P/S GIRDER SPANS)
63 SLAB DRAINS (PLATE GIRDER SPANS)
64 LEFT BARRIER CURB
65 LEFT BARRIER CURB
66 RIGHT BARRIER CURB
67 RIGHT BARRIER CURB
68 BARRIER CURB AT BENT 1
69 BARRIER CURB AT BENT NO. 21
70 CONDUIT SYSTEM —DELETE: 9-22-89
71 CONDUIT SYSTEM —DELETE: 9-22-89
72 BAR LIST
73 BAR LIST
74 BAR LIST
75 BAR LIST

B.M. [illegible] hydrant at NW cor. Blue River Rd. and S.B. Hickman Mills Dr.

STATE ROAD SOUTH MIDTOWN ROADWAY

IN KANSAS CITY

PROJECT NO.

JOB NO. 4-U-71-2E

JACKSON COUNTY

STA. 512+65.26 (N.B.L.)

RTE. 71 (N.B.L.)

DATE 8/18/89

STD.
STD. 706.35
A-2733

DESIGNED April 1989
DETAILED July 1989
CHECKED July 1989

Note: This drawing is not to scale. Follow dimensions.

SEE FINAL PLANS
Sheet No. [illegible] of 75

STATE	PROJ. NO.	SHEET NO.
MO.		7

(61'-82'-82') Prestressed Concrete I-Girder Spans

(4 @ 82') Prestressed Concrete I-Girder Spans

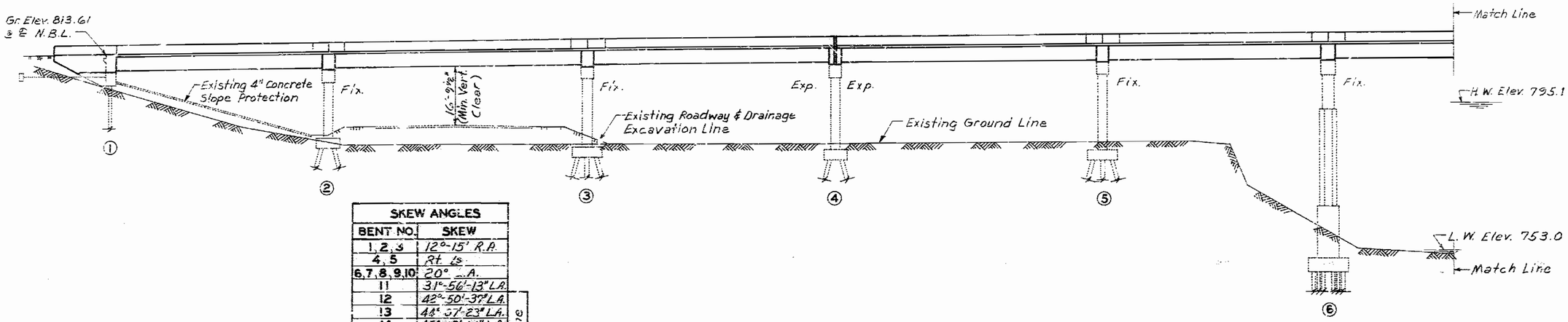

PART GENERAL ELEVATION

SKEW ANGLES	
BENT NO.	SKEW
1, 2, 3	12°-15' R.A.
4, 5	Rt. ⅄s
6, 7, 8, 9, 10	20° ⅄A.
11	31°-56'-13" L.A.
12	42°-50'-37" L.A.
13	44°-37'-23" L.A.
14	45°-09'-06" L.A.
15	46°-54'-21" L.A.
16	28°-11'-36" L.A.
17, 18	Radial
19	36°-11'-18" L.A.
20	55°-24'-52" L.A.
21	56°-30'-09" L.A.

To Radial Line

Note: Skew angles are measured at ℄ N.B.L..

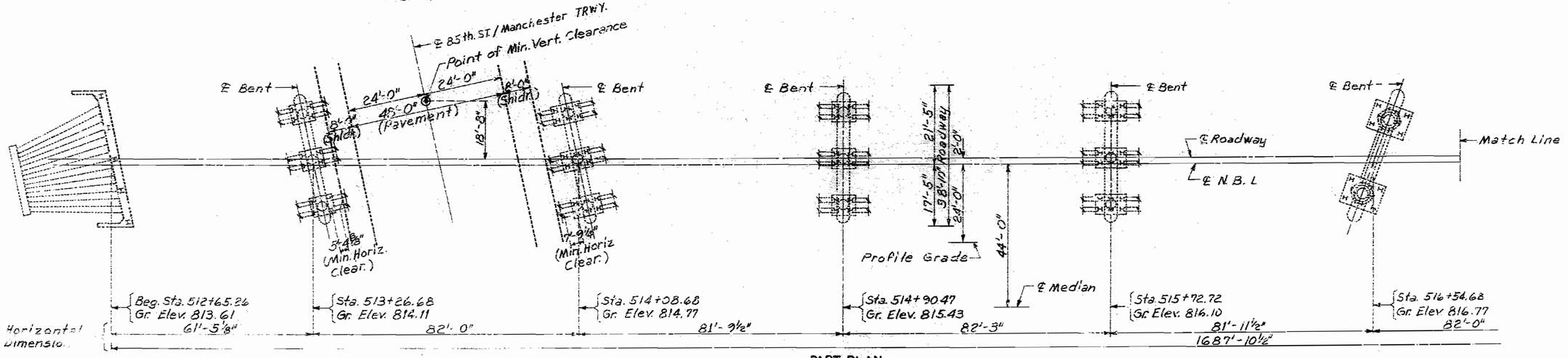

PART PLAN

Note: For General Notes and Estimated Quantities see Sheet No. 6
Stations shown are along ℄ Median.
Grade Elevations shown are along ℄ N.B. Lane.

DETAILED JUNE 1989
CHECKED July 1989

Note: This drawing is not to scale. Follow dimensions.

SEE FINAL PLANS

Sheet No. 2 of 75

JACKSON COUNTY

A-2733

STATE	PROJ. NO	SHEET NO.
MO.		8

(82'-82'-63'-63'-63') Prestressed Concrete I-Girder Spans

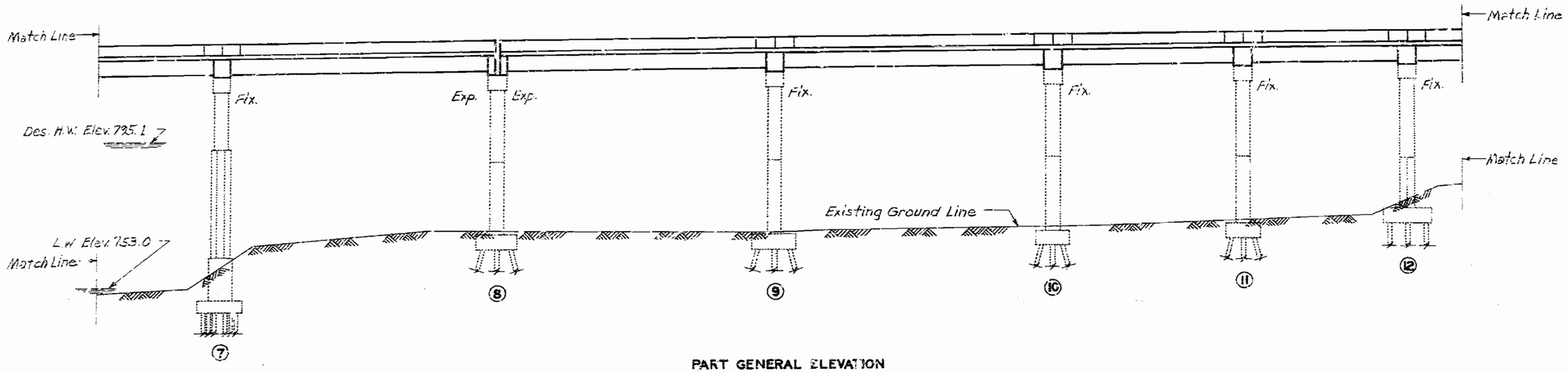

PART GENERAL ELEVATION

S.M.P. CURVE DATA

P.I. Sta.	= 526+15.81
Δ	= 22°-06'-46"
D	= 2°-00'-00"
R	= 2864.79'
L	= 1105.64'
T	= 559.79'
E	= 54.18'
S.E.	= Varies

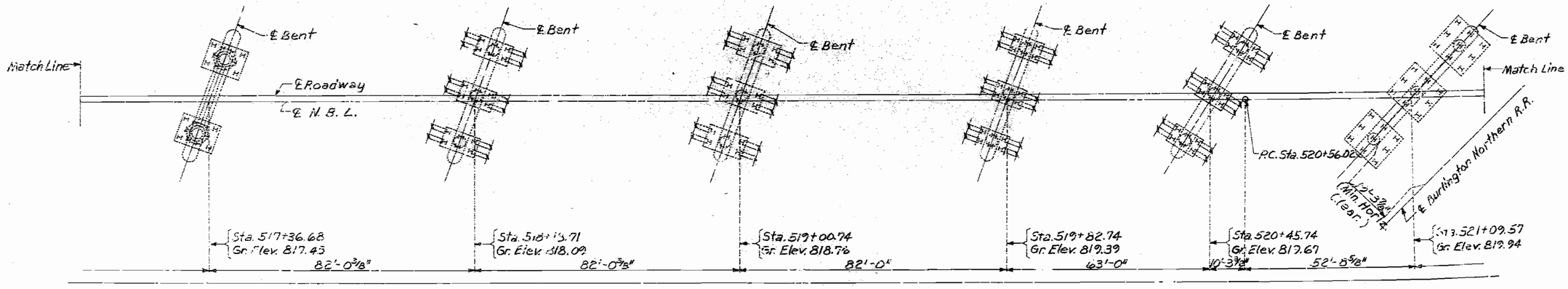

PART PLAN

DETAILED JUNE 1989
CHECKED July 1989

Note: This drawing is not to scale. Follow dimensions.

Sheet No. 3 of 75 Sheets

JACKSON COUNTY

A-2733

STATE	PROJ. NO	SHEET NO.
MO.		9

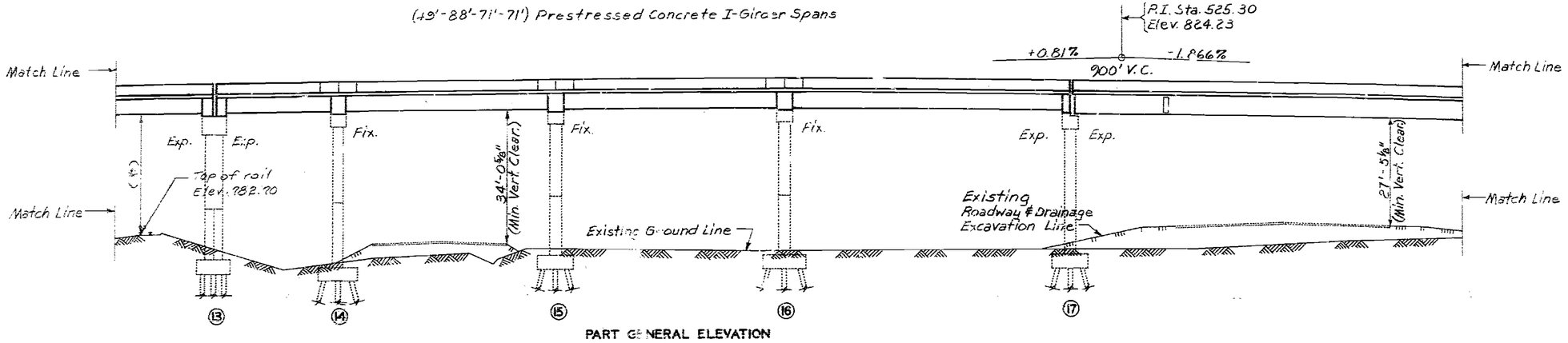

PART GENERAL ELEVATION

* Note: Final vertical clearance from top of rails to bottom of superstruce to be at least 23'-0".

N.B. DETOUR CURVE DATA

P.I. Sta.	= 21+83.94
Δ	= 25°-23'-41"
D	= 6°-00'-00"
R	= 954.93'
L	= 423.25'
T	= 215.16'
E	= 23.94'

BLUE RIVER RD. CURVE DATA

P.I. Sta.	= 14+16.04
Δ	= 23°-30'-42"
D	= 7°-00'-00"
R	= 818.51'
L	= 335.88'
T	= 170.34'
E	= 17.54'

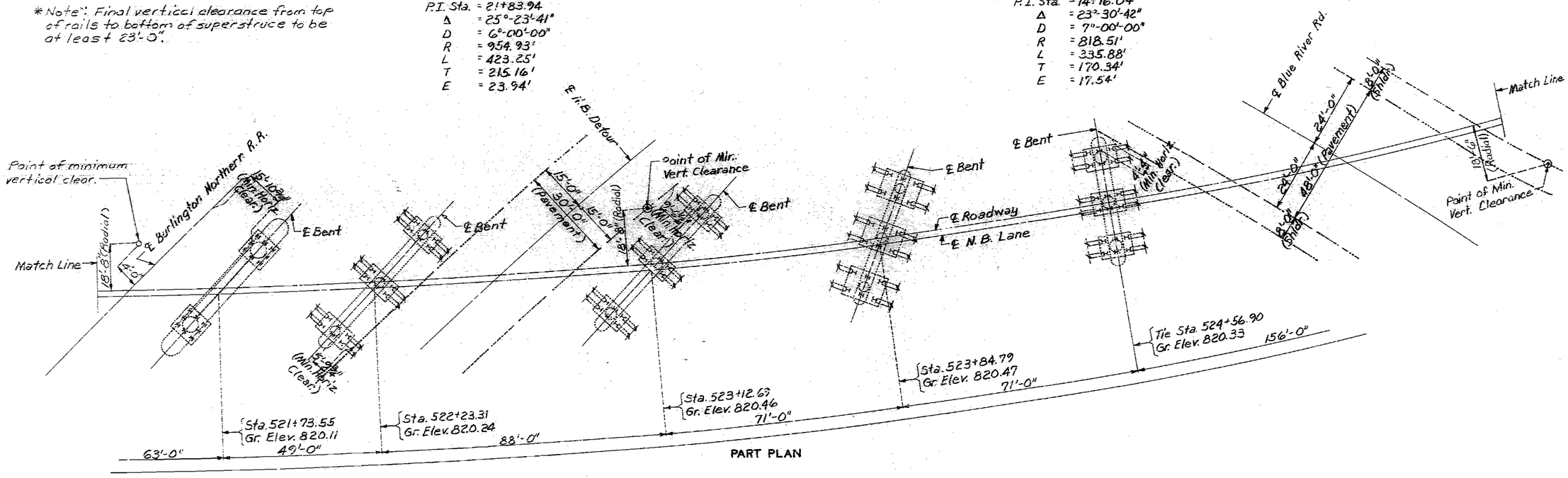

PART PLAN

DETAILED JULY 1989
CHECKED July 1989

Note: This drawing is not to scale. Follow dimensions.

Sheet No. 4 of 75

JACKSON COUNTY

A-2733

STATE	PROJ. NO.	SHEET NO.
MO		10

(156 - 135'-135'-72') Continuous Composite Plate Girder Spans

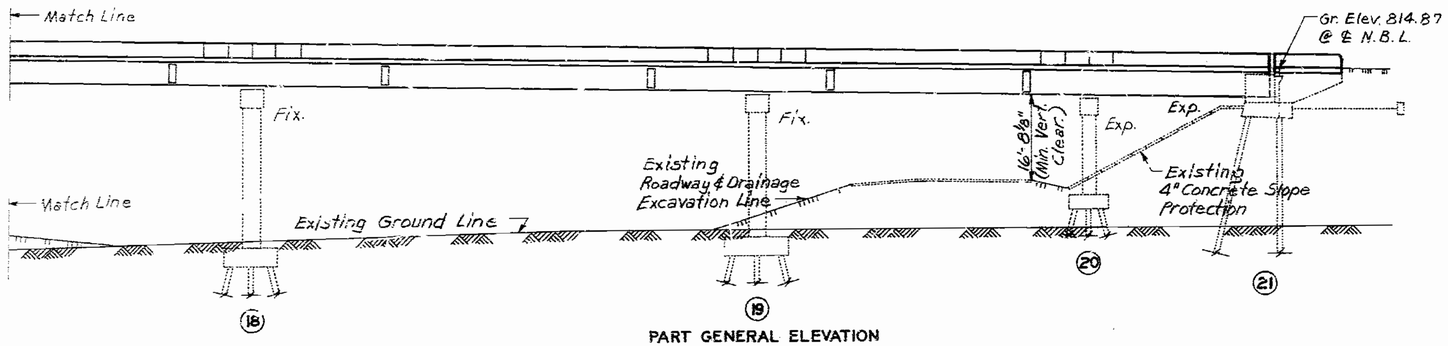

PART GENERAL ELEVATION

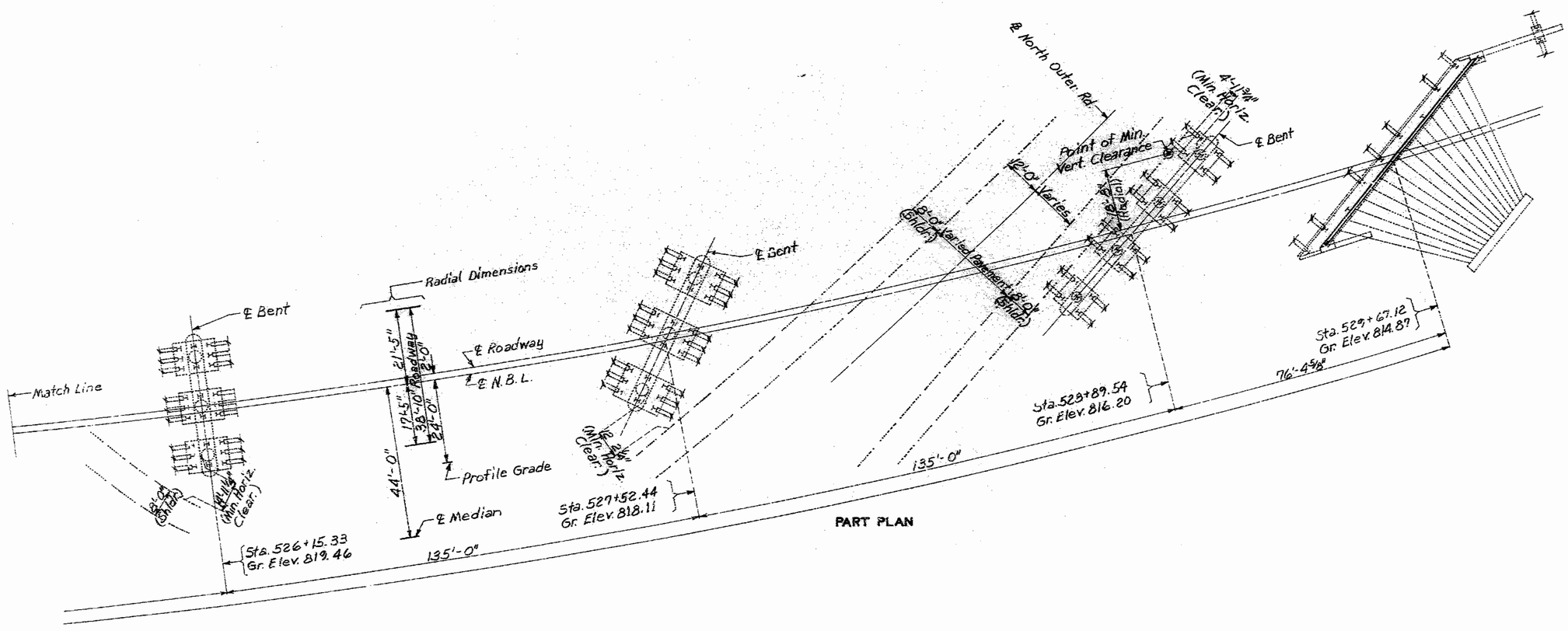

PART PLAN

DETAILED JULY 1989
CHECKED July 1989

Note: This drawing is not to scale. Follow dimensions.

SEE FINAL PLANS

Sheet No. 5 of 75

JACKSON COUNTY

A-2733

STATE	PROJ NO.	SHEET NO.
MO		11

GENERAL NOTES :

Design Specifications : A.A.S.H.T.O. - 1983 and Interims thru 1988
Load Factor Design

Design Loading :
HS20-44 Modified 24,000# Tandem Axle
35#/sq. ft. Future Wearing Surface
Earth 120#/cu. ft. Equivalent Fluid Pressure 49#/cu.ft (Bt. #1) 29#/cu.ft. (Bt. #21)
Fatigue Stress (Ft. Girders) - Case II
Superstructure (Prestressed Girders) : Simply-supported, non-composite for Dead Load. Continuous composite for Live Load.

Design Unit Stresses :
Class B1 Concrete (Safety Barrier Curb) f'c = 4,000 psi.
Class B2 Concrete (Superstructure, except Prestressed Girders and Safety Barrier Curb) f'c = 4,000 psi
Reinforcing Steel (Grade 60) fy = 60,000 psi.
Structural Carbon Steel fy = 36,000 psi.
Structural Steel (A.S.T.M. A572) Grade 50 fy = 50,000 psi.
For Prestressed Girder Stresses see Sheets 22 thru 36 .

Bearings :
Bearings shall be 60 durometer Neoprene Pads for Bents No. 1 thru No. 17 (Prestressed Girders) and 70 durometer Neoprene Pads for Bents No. 17 thru No. 21 (Ft. Girders).

Fabricated Steel :
Field connections, High Strength Bolts 3/4"ϕ, holes 13/16"ϕ, except as noted.

Joint Filler :
All joint filler shall meet the requirements of Std. Spec. 1057.2.4, except as noted.

Reinforcing Steel :
Minimum clearance to reinforcing steel shall be 1½", unless otherwise noted.

Painting :
System C by Contractor in accordance with Std. Spec. 712.12. Color of the final field coat shall be green.

Construction Clearance :
A minimum vertical clearance of 14'-6" from existing lanes and a minimum lateral clearance of *** centered on existing lanes shall be maintained during construction.

*** { 52'-0" (Manchester Trafficway)
34'-0" (N.B. Rte. 71 Detour)
52'-0" (Blue River Road)
Variable Pav't. width + 2'-3" from Pav't edges (North Outer Rd)

A minimum vertical clearance of 21'-6" from top of rails and a minimum lateral clearance of 12'-0" from the centerline of track to nearest temporary construction falsework shall be maintained during construction.

Outline of old work is indicated by light dashed lines. Heavy lines indicate new work.

ESTIMATED QUANTITIES

ITEM		TOTAL
( )Slab on Concrete I-Girder, See Spec. Prov.	Sq. Yd.	5463
( )Slab on Steel, See Spec. Prov.	Sq. Yd.	2305
Safety Barrier Curb	Lin. Ft.	3459
Plain Neoprene Bearing Pads	Each	5
Laminated Neoprene Bearing Pads	Each	155
Type N PTFE Bearings	Each	15
Elastomeric Expansion Joint Seal (3 inch)	Lin. Ft.	54
Elastomeric Expansion Joint Seal (4 inch)	Lin. Ft.	189
Prestressed Concrete I-Girders (49' Span)	Each	5
Prestressed Concrete I-Girders (61' Span)	Each	5
Prestressed Concrete I-Girders (63' Span)	Each	15
Prestressed Concrete I-Girders (71' Span)	Each	10
Prestressed Concrete I-Girders (82' Span)	Each	40
Prestressed Concrete I-Girders (88' Span)	Each	5
Fabricated Structural Carbon Steel (Ft. Gdrs.)	Lb.	443,800
Fabricated Structural Low Alloy Steel (Ft. Gdrs.) A-572	Lb.	347,210
Slab Drains	Each	122
Vertical Drains at End Bents	Each	2
Painting (System C) Green	Ton	393.5
Laminated Neoprene Bearing Pads (Steel Structures)	Each	10

Note : The cost of furnishing, fabricating and installing Neoprene Bearing Pads, complete-in-place, will be paid for at the Contract Unit Price for Plain and Laminated Neoprene Bearing Pads per each.
All concrete and reinforcement in End Bent No. 1 is included in the estimated superstructure quantities for "Slab on Concrete I-Gdr.", see Special Provisions.

ESTIMATED QUANTITIES FOR ALTERNATE SLABS

TYPE OF SLAB	SLAB ON STEEL		SLAB ON CONC. I-GDR.		
	REINF. (LBS.) EPOXY	CONC. (CU. YD.)	REINF. (LBS.) EPOXY	REINF. (LBS.) PLAIN	CONC. (CU. YD.)
Cast-In-Place Conventional Forms	154,790	630.1	337,760	11,320	1630.4
Precast Panel Forms	—	—	255,190	11,320	1406.6**
Stay-In-Place Forms	154,790	615.2 *	—	—	—

Note : The Table of Estimated Quantities for Alternate Slabs represents the quantities used by the State in preparing the cost estimate for concrete slabs. Variations may be encountered in these estimated quantities but these variations cannot be used for an adjustment in the Contract Unit Price per square yard of Alternate Slab used.
See Special Provisions for alternate methods of forming slabs.
* Does not include concrete required to fill corrugations of S.I.P. Forms.
** Based on minimum top flange thickness and minimum joint filler thickness.
Precast panel quantities are based on skewed end panels.
The prestressed panel quantities are not included in the table of Estimated Quantities for Alternate Slabs.
Concrete and reinforcement in Estimated Quantities for "Slab on Steel" includes concrete and reinforcing in backwall, above upper const. joint, at End Bent No. 21.

5713

DETAILED July 1989
CHECKED July 1989

Note: This drawing is not to scale. Follow dimensions.

SEE FINAL PLANS

JACKSON COUNTY

A-2733

STATE	PROJ. NO.	SHEET NO.
MO		12

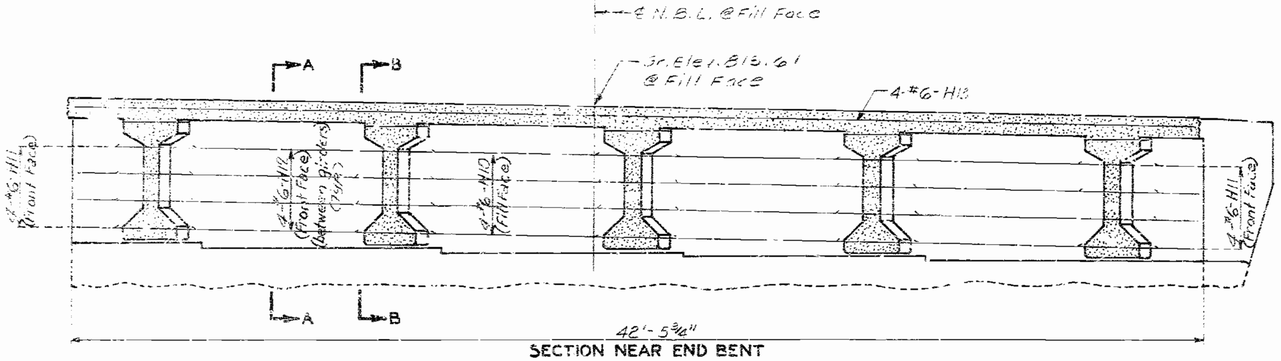

SECTION NEAR END BENT

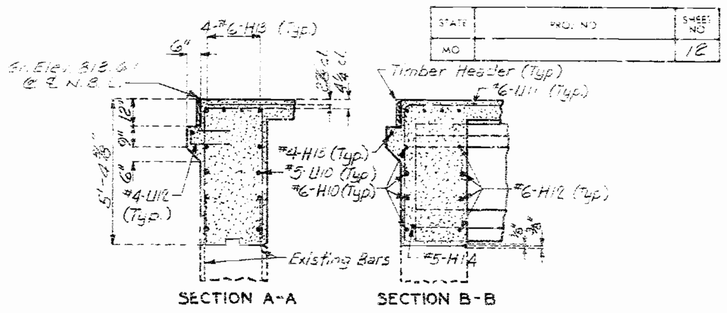

SECTION A-A SECTION B-B

Note: All concrete in the end bent above top of beam and below top of slab shall be Class B2.
Stirrup ends at end of girder shall be field bent or, if necessary, cut in field to maintain 1½" min clearance to fill face of end bent.

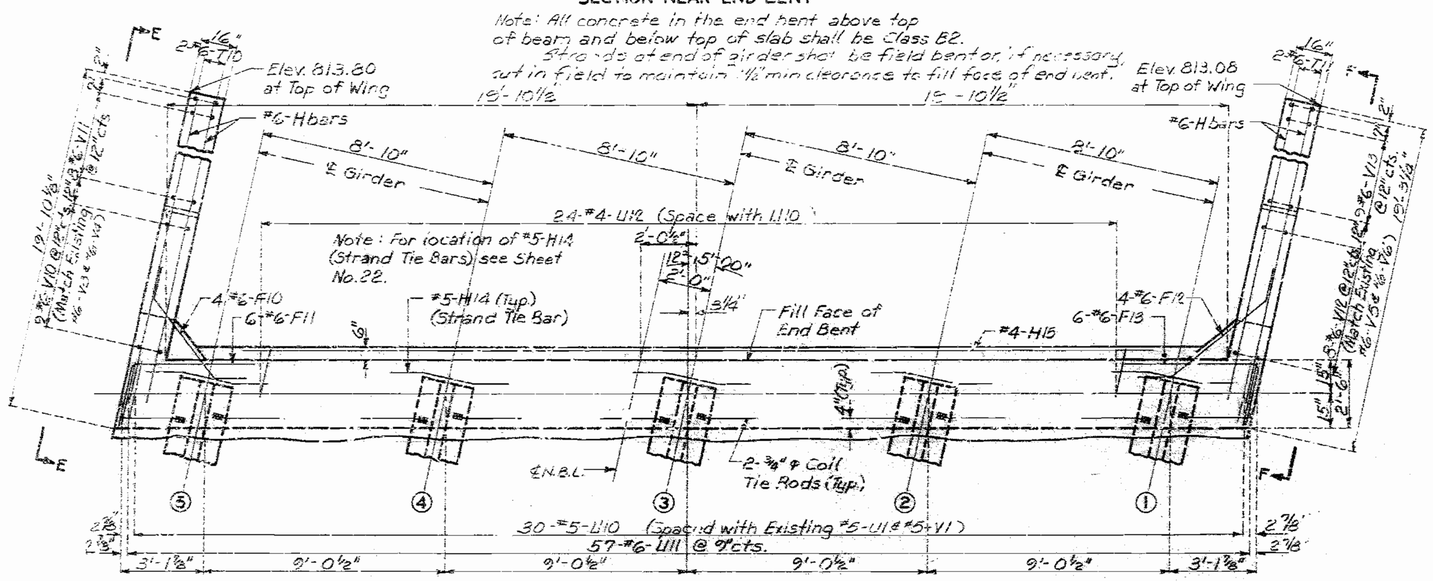

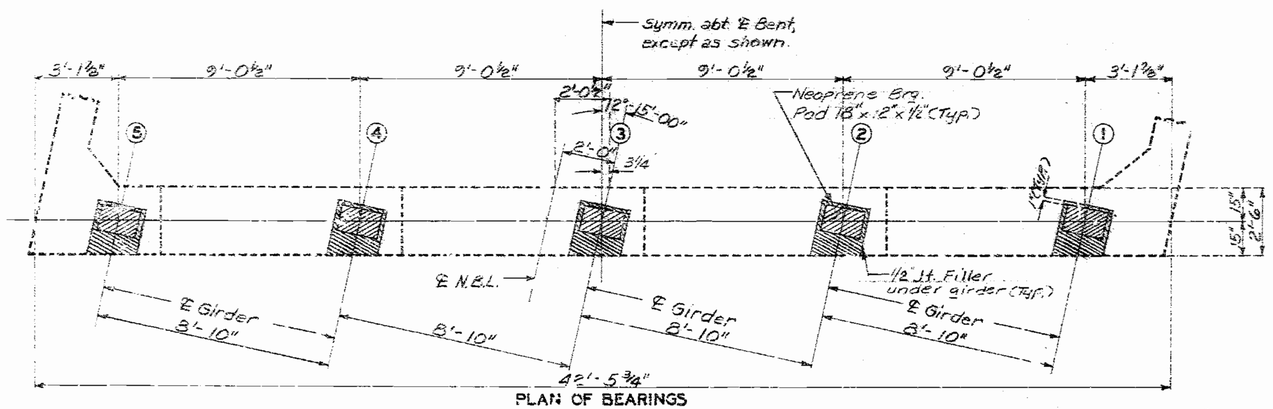

PLAN OF BEARINGS

DETAILS OF END BENT NO. 1

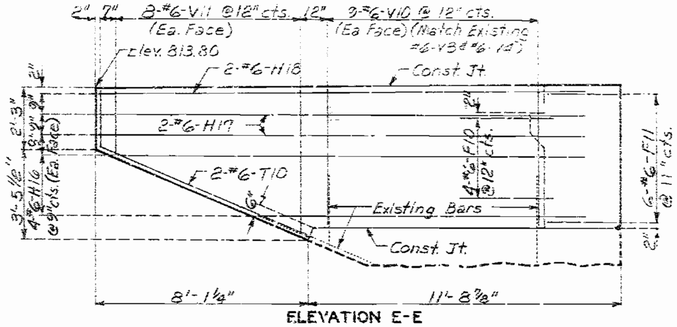

ELEVATION E-E

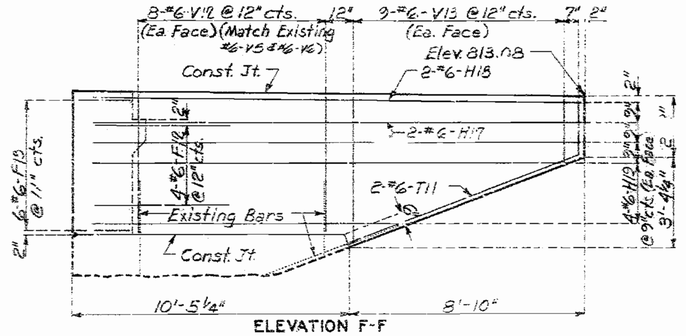

ELEVATION F-F

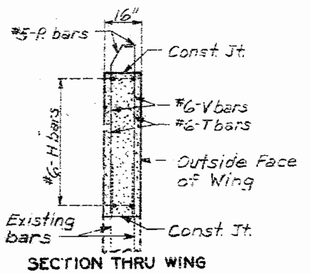

SECTION THRU WING

Note: Bend #6-F10 & F12 bars in field when necessary to conform to slope of wing.

Note: All Ubars in End Bent No. 1 are to placed parallel to ℄ Girder.
For details of barrier curb see Sheet No. 64 thru 69.
For details of timber header see Sheet No. 69

DETAILED OCT. 1988
CHECKED ___ 19__

Note: This drawing is not to scale. Follow dimensions.

JACKSON COUNTY

A-2733

STATE	PROJ. NO.	SHEET NO.
MO		13

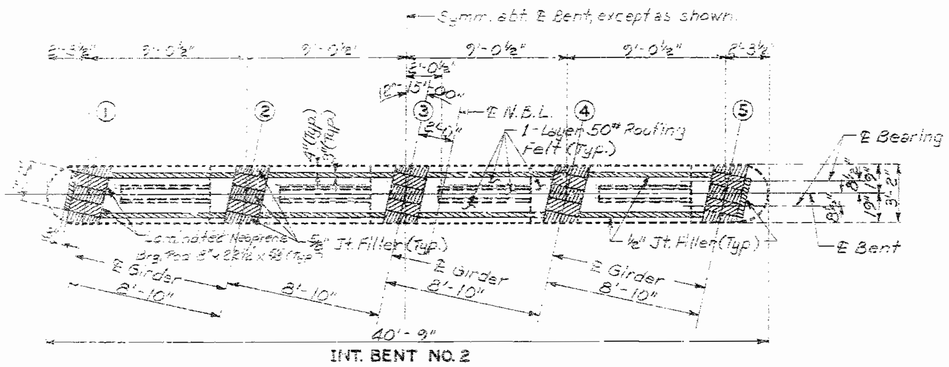

INT. BENT NO. 2

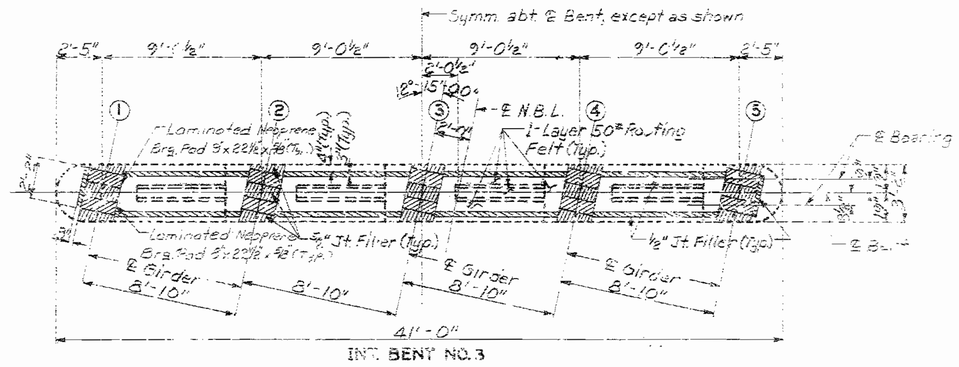

INT. BENT NO. 3

Note: For details of Laminated Neoprene Bearing Pads see Sheet No. 17.

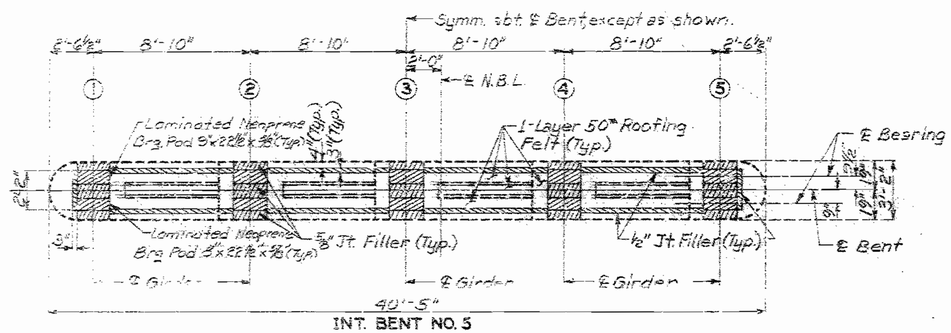

INT. BENT NO. 5

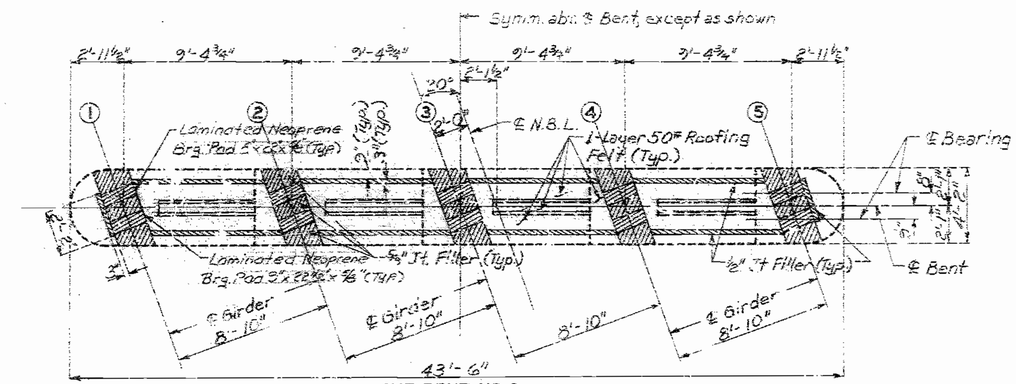

INT. BENT NO. 6

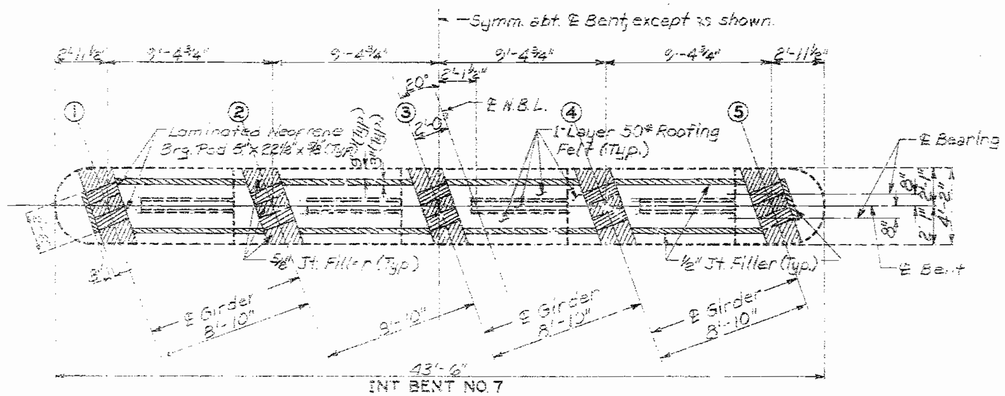

INT. BENT NO. 7

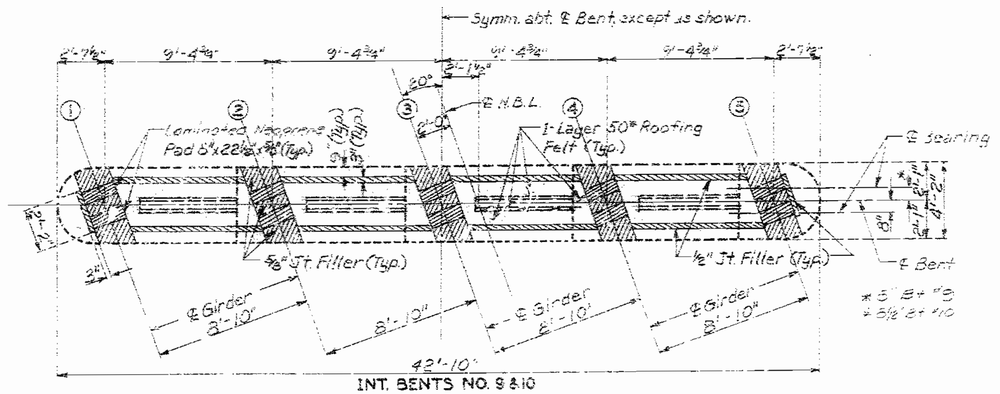

INT. BENTS NO. 9 & 10

DETAILED SEPT 1986
CHECKED JULY 1987

DETAILS OF INT. BTS. SHOWING BEARINGS

Note: This drawing is not to scale. Follow dimensions.

Sheet No. 8 of 75

JACKSON COUNTY

A-2733

STATE	PROJ. NO	SHEET NO
MO.		14

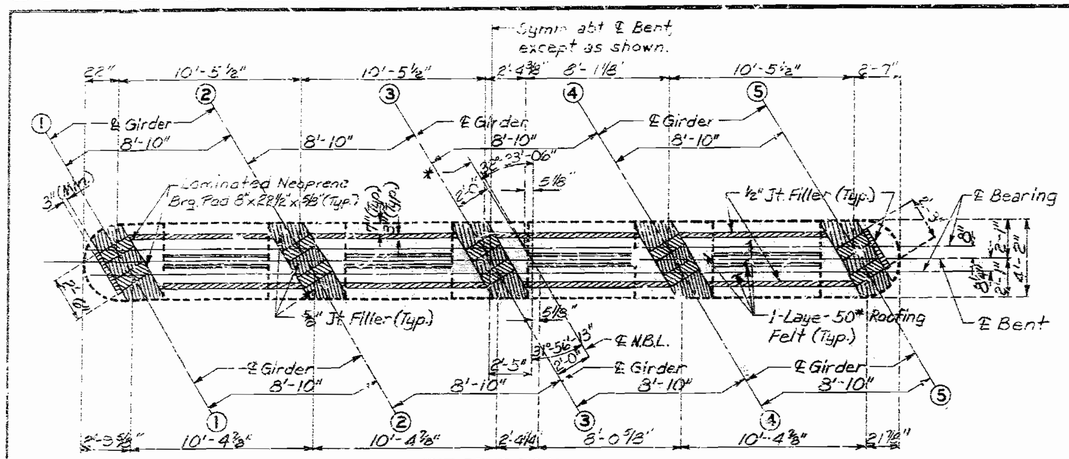

INT. BENT NO 11

*Chord parallel to girders (Span 11-12)

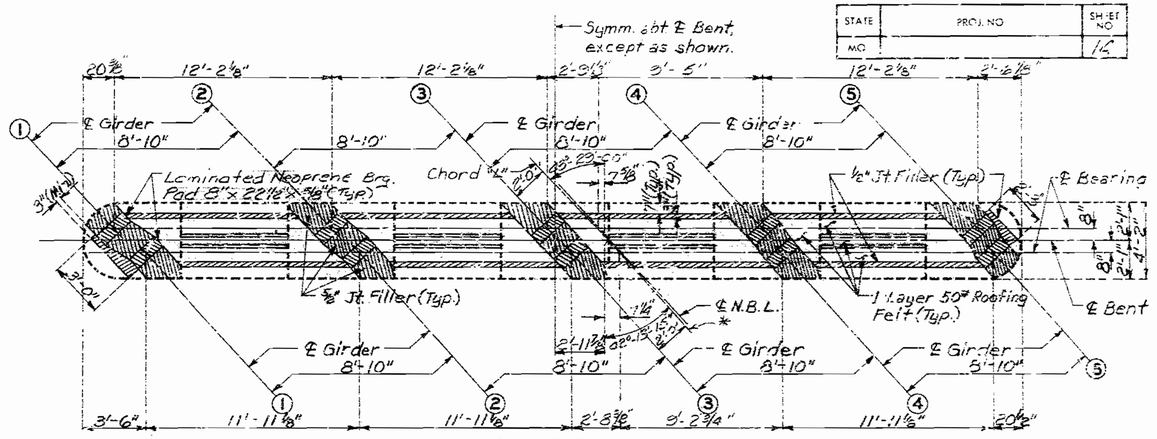

INT. BENT NO. 12

*Chord parallel to girder (Span 11-12)

Note: For details of Laminated Neoprene Bearing Pads see Sheet No. 17.

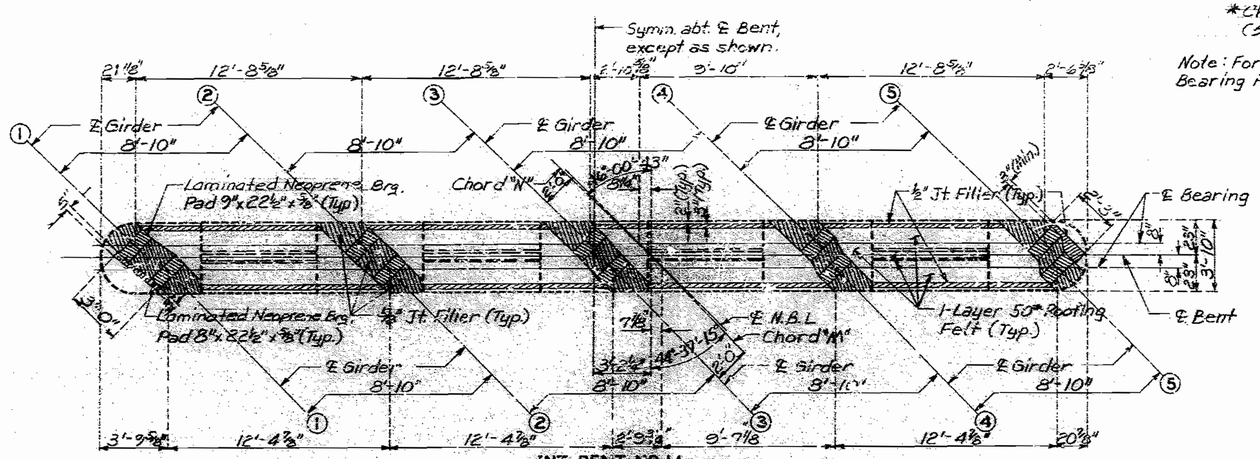

INT. BENT NO. 14

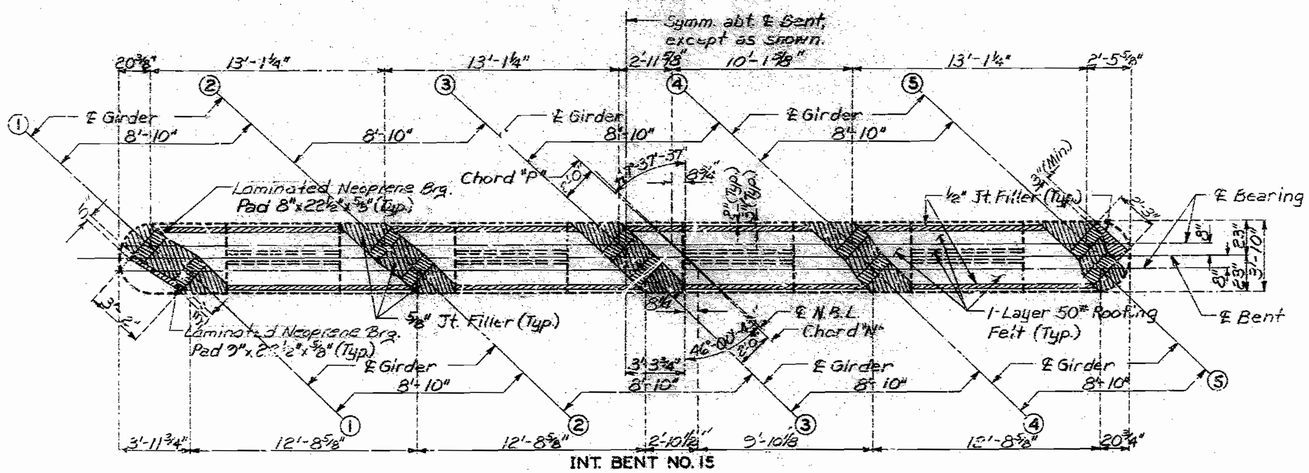

INT. BENT NO. 15

DETAILS OF INT. BTS. SHOWING BEARINGS

DETAILED SEPT. 1988
CHECKED July 1989

Note: This drawing is not to scale. Follow dimensions.

JACKSON COUNTY

A-2733

16

STATE	PROJ. NO.	SHEET NO.
MO.		15

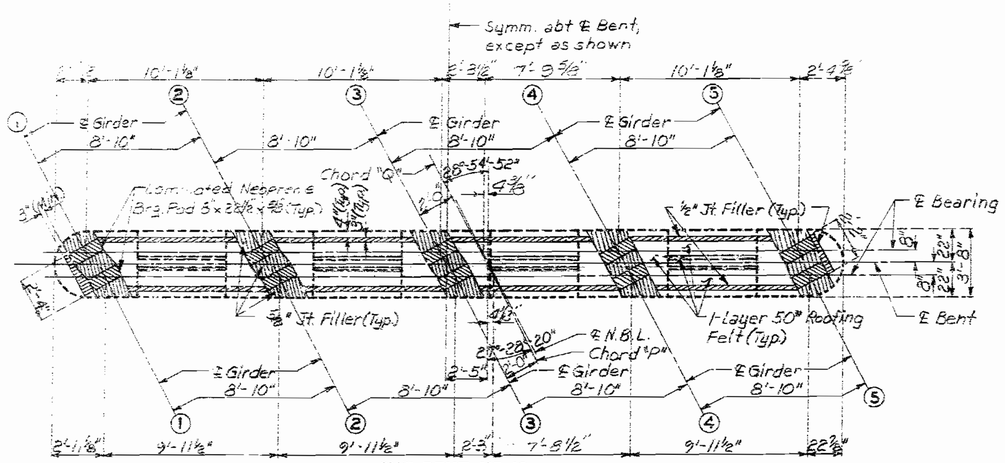

INT. BENT NO. 16

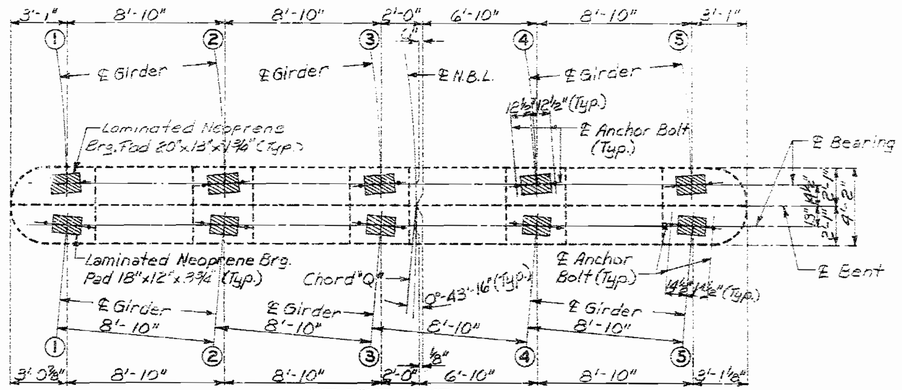

INT. BENT NO. 17

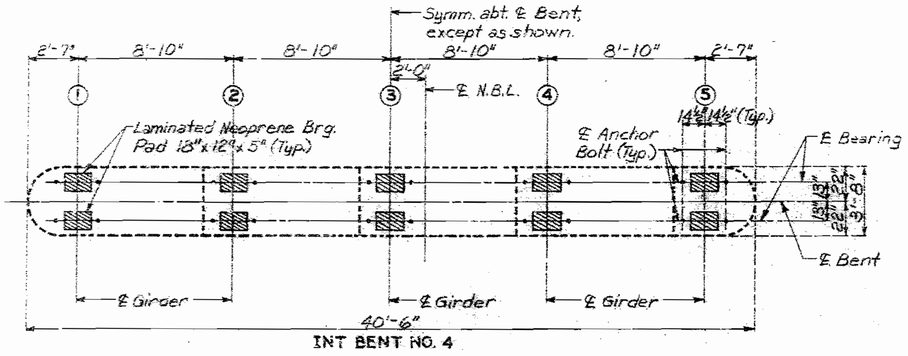

INT. BENT NO. 4

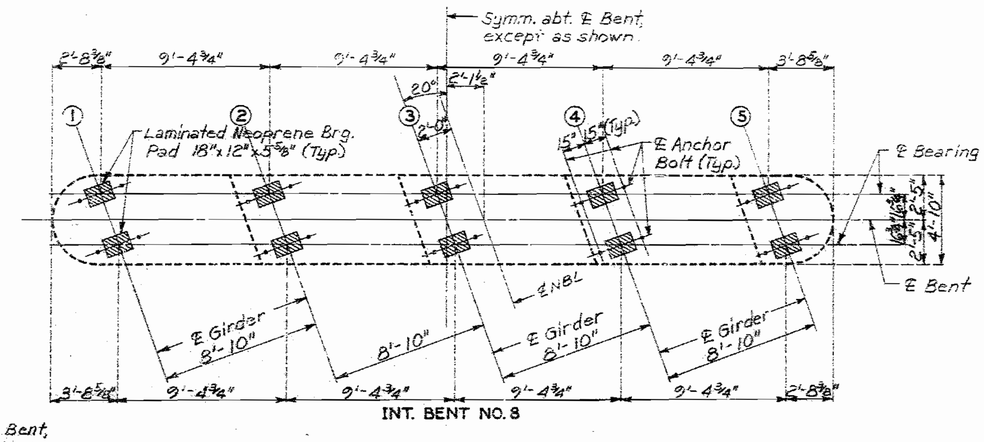

INT. BENT NO. 8

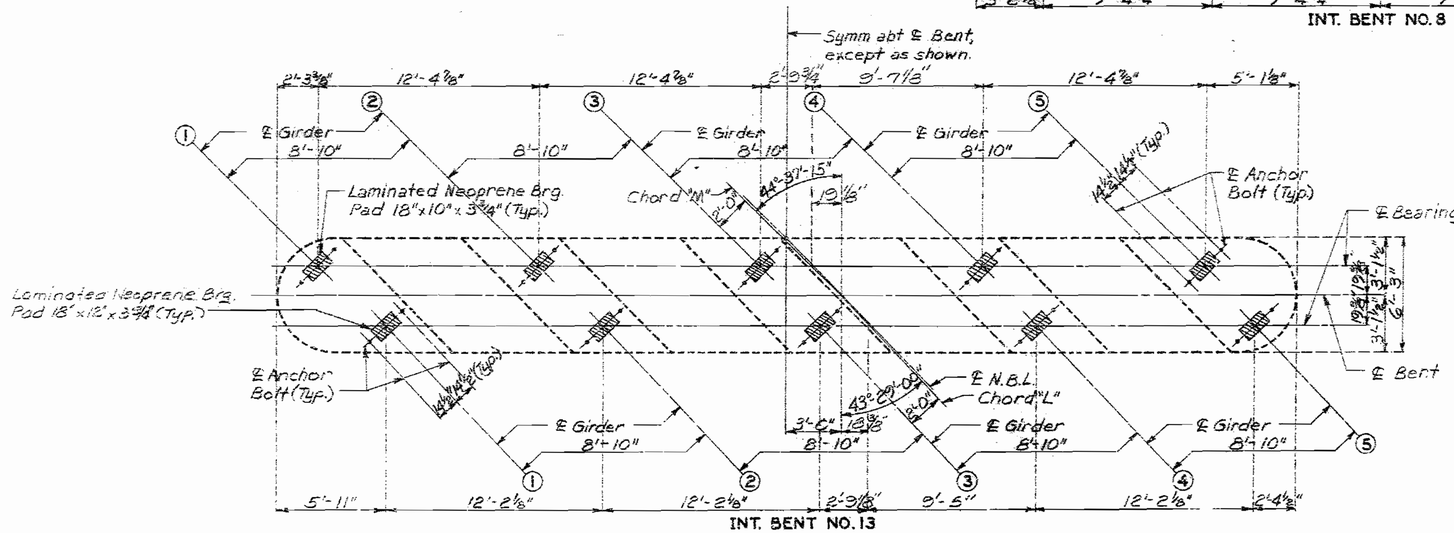

INT. BENT NO. 13

Note: For details of Laminated Neoprene Bearing Pads see Sheet Nos. 17 and 18.

DETAILS OF INT. BTS. SHOWING BEARINGS

DETAILED SEPT. 1988
CHECKED [illegible] 1988

Note. This drawing is not to scale. Follow dimensions

STATE	PROJ NO	SHEET NO.
MO		10

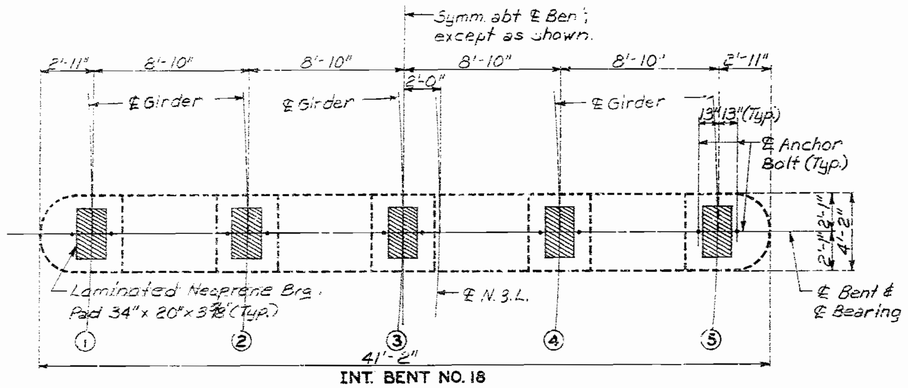

INT. BENT NO. 18

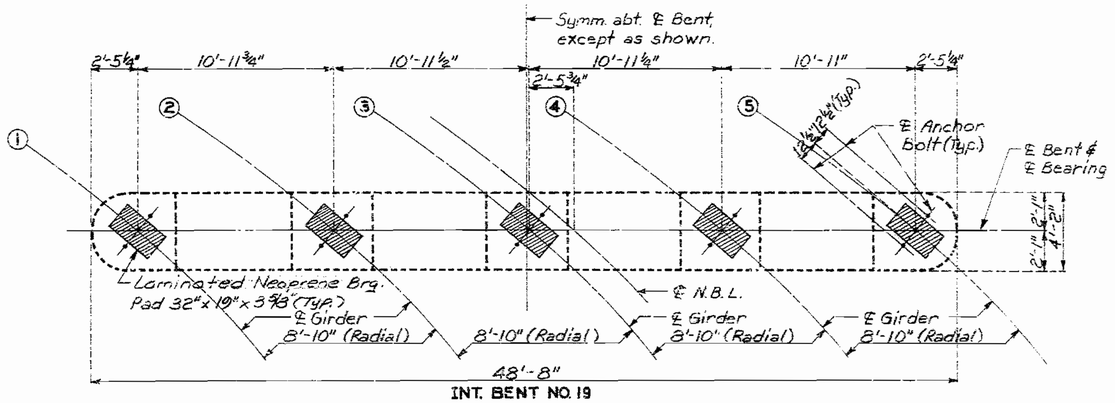

INT. BENT NO. 19

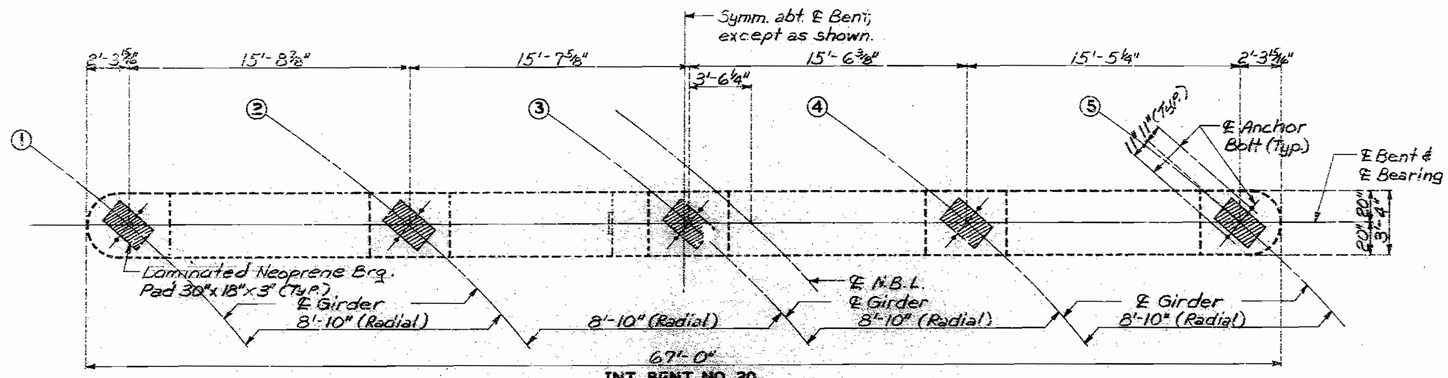

INT. BENT NO. 20

DETAILS OF INT. BTS. SHOWING BEARINGS

Note: For bearing alignment, see Sheet No. 16.
For details of Laminated Neoprene Bearing Pads see Sheet No. 13.

58 18

STATE	PROJ. NO.	SHEET NO.
MO.		17

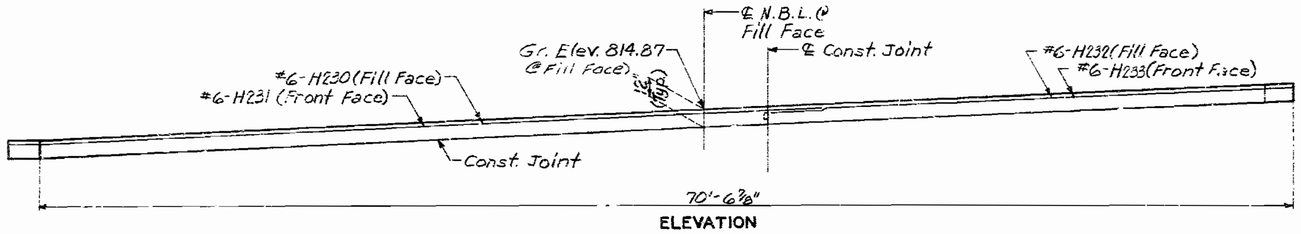

ELEVATION

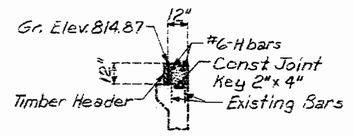

SECTION AT ℄ N.B.L.

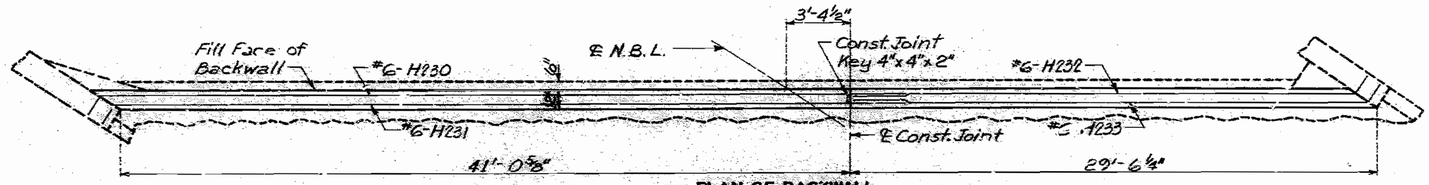

PLAN OF BACKWALL

Note: For bearing alignment, see Sh. No. 16.
For details of Laminated Neoprene Bearing Pads, see Sheet No 18.

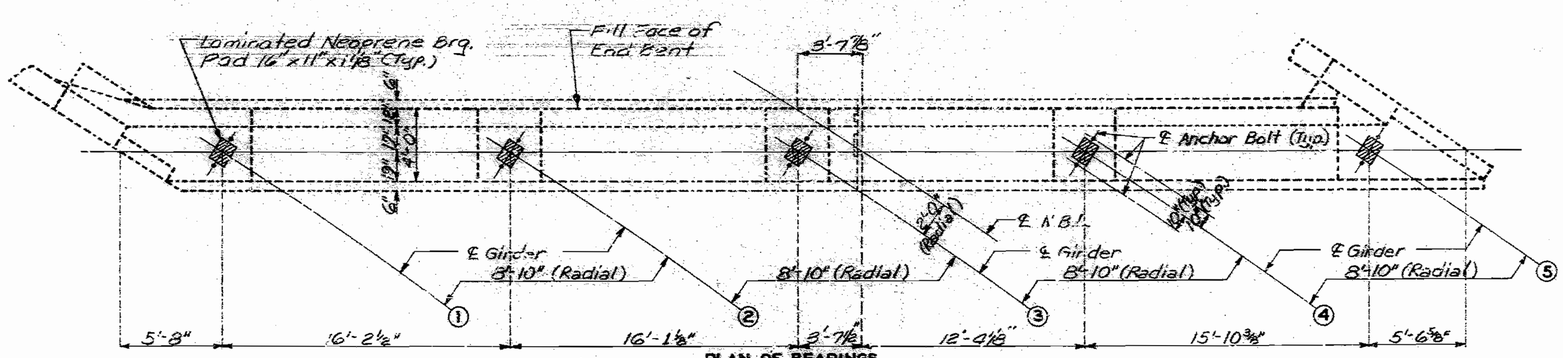

PLAN OF BEARINGS
END BENT NO. 21

DETAILED OCT. 1988
CHECKED July 1989

Note: This drawing is not to scale. Follow dimensions.

JACKSON COUNTY

A-2733

STATE	PROJ NO	SHEET NO
MO		18

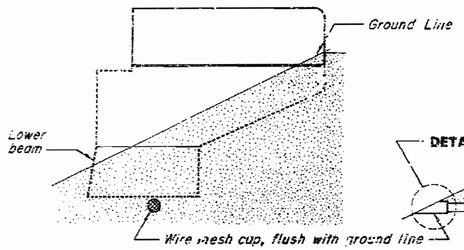

ELEVATION OF WING

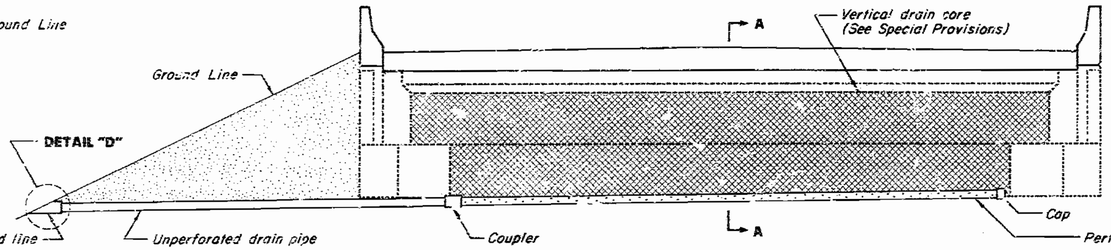

ELEVATION AT END BENT NO. 21
(NON-INTEGRAL END BENT)

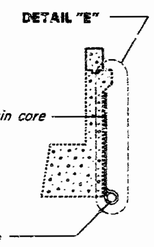

SECTION A-A

GENERAL NOTES:

DRAIN PIPE MAY BE EITHER 6" DIAMETER CORRUGATED METALLIC COATED STEEL PIPE UNDERDRAIN, 4" DIAMETER CORRUGATED POLY VINYL CHLORIDE (PVC) DRAIN PIPE, OR 4" DIAMETER CORRUGATED POLYETHYLENE (PE) DRAIN PIPE.

PLACE DRAIN PIPE AT FILL FACE OF END BENT AND SLOPE TO LOWEST GRADE OF GROUND LINE, ALSO MISSING THE LOWER BEAM OF END BENT BY [illegible]. (SEE ELEVATION AT END BENT)

PERFORATED PIPE SHALL BE PLACED AT FILL FACE SIDE AT THE BOTTOM OF END BENT AND PLAIN PIPE SHALL BE USED WITHIN THE VERTICAL DRAIN ENDS TO THE EXIT AT GROUND LINE.

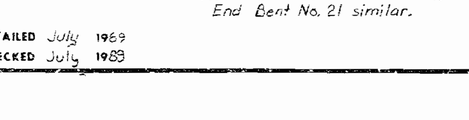

ELEVATION OF WING

ELEVATION AT END BENT NO. 1
(INTEGRAL END BENT)

SECTION B-B

DETAIL "E"

Note : End Bent No. 1 shown,
End Bent No. 21 similar.

DETAIL "D"

VERTICAL DRAIN AT END BENTS

DETAILED July 1989
CHECKED July 1989

Note: This drawing is not to scale. Follow dimensions.

STATE	ROUTE NO.	SHEET NO.
ORE.		13

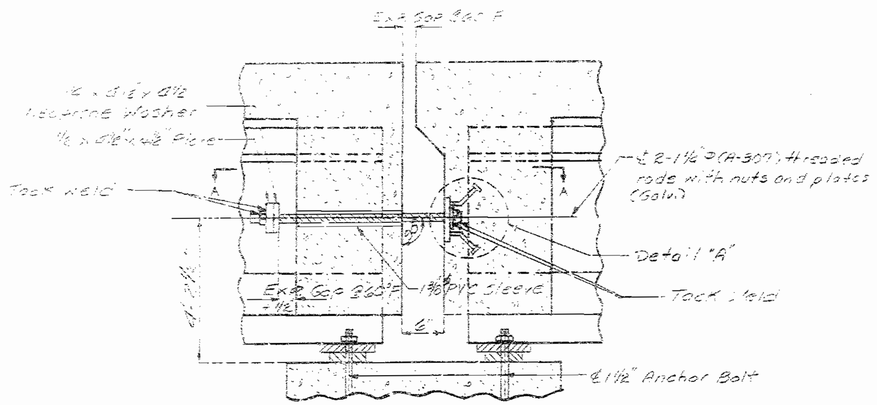

PART SECTION NEAR ℄ GIRDER
AT INT. BENT NO.4
(INT. BENT NO.8 & NO.13 SIMILAR)

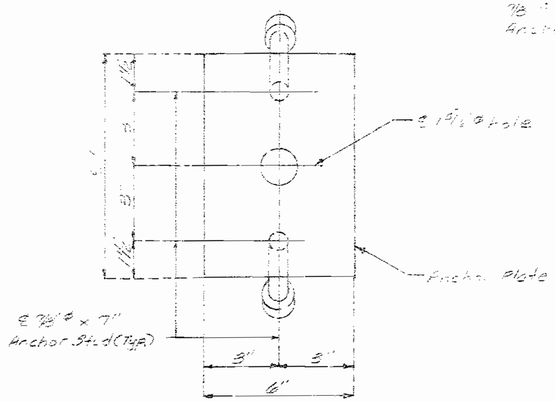

DETAIL "A"

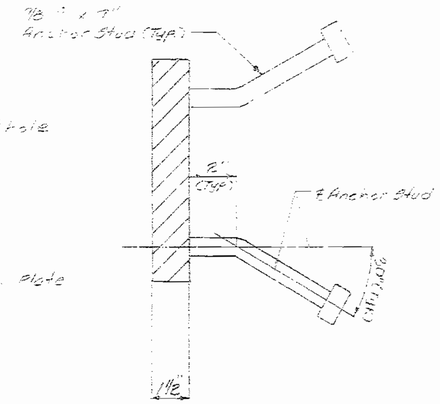

SECTION THRU ANCHOR PLATE

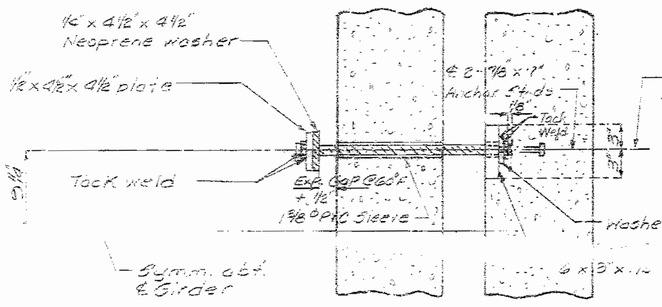

SECTION A-A
INT. BENT NO. 4

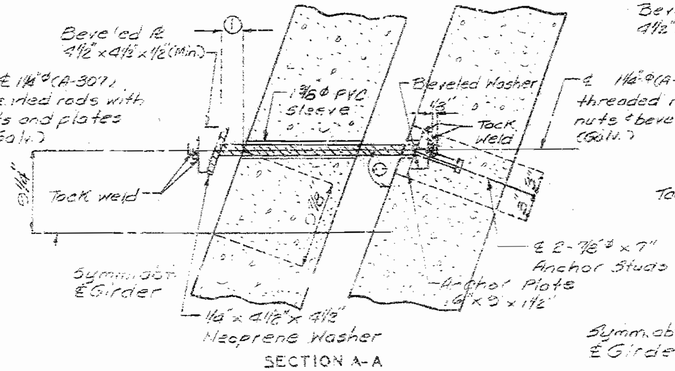

SECTION A-A
INT. BENT NO. 8

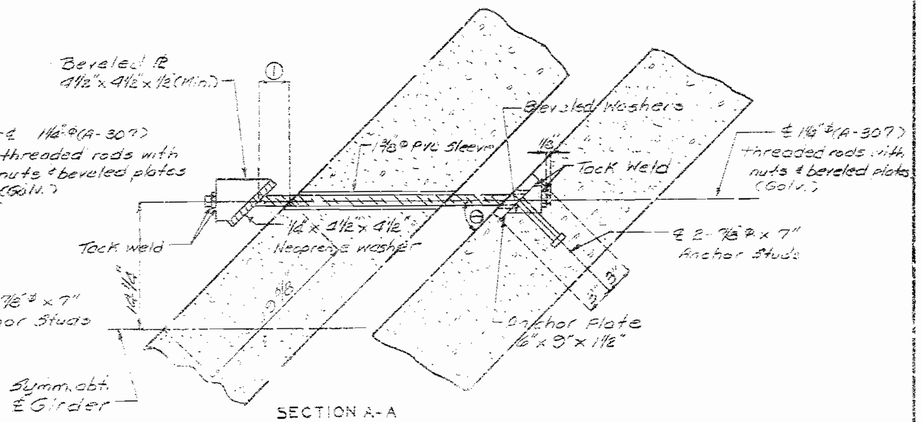

SECTION A-A
INT. BENT NO.13

① Exp. Gap @ 60°F x cos ∠ ⊖ + 1½"

Bent No.	⊖
8	10°-05'-00"
13	46°-31'-00"

Note: A temporary threaded plug shall be inserted into each embedded hex nut in the diaphragm at Int. Bents 4, 8 & 13, before concrete is poured. Plugs shall extend ⅛" into diaphragm concrete as shown in section A-A.

1½" plates and anchor plates shall be A-36 Steel.

Weight of 1½" plates, threaded rods, nuts, washers and anchor plates are included in weight of fabricated structural carbon steel.

Cost of neoprene washers shall be included in unit price bids for other items.

Studs shall be in accordance with sec. 1057.

Int Girders are shown, exterior girders have only one restrainer which shall be placed on inside face of web

DETAILS OF EARTHQUAKE RESTRAINERS

DETAILED W.P.F. 1985
CHECKED J.S. 1985

Note: This drawing is not to scale. Read x dimensions.

Sheet No. 14 of 75

JACKSON COUNTY

A-2733

4	No. 14	18"
5		20

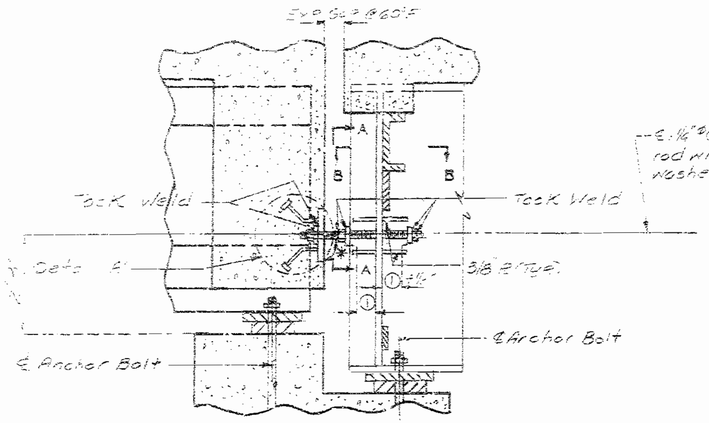

PART SECTION NEAR ℄ GIRDER NO.1

*90°-00'-00"

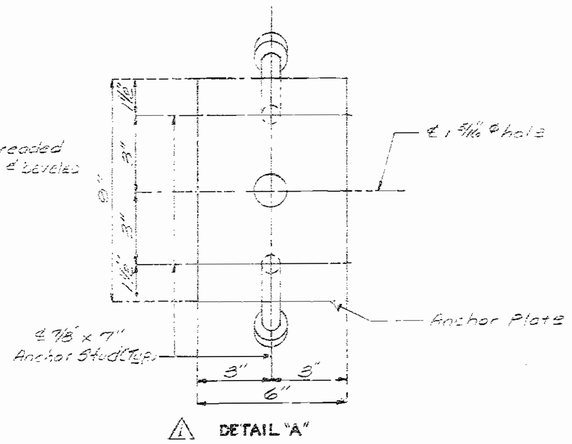

⚠1 DETAIL "A"

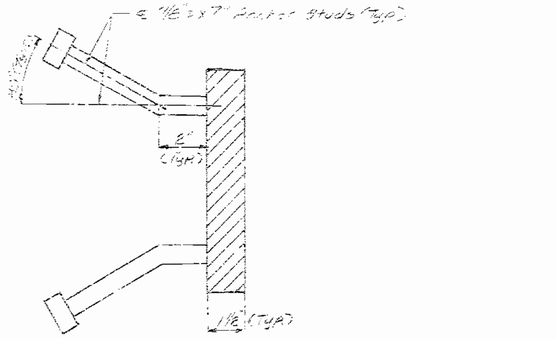

SECTION THRU ANCHOR PLATE

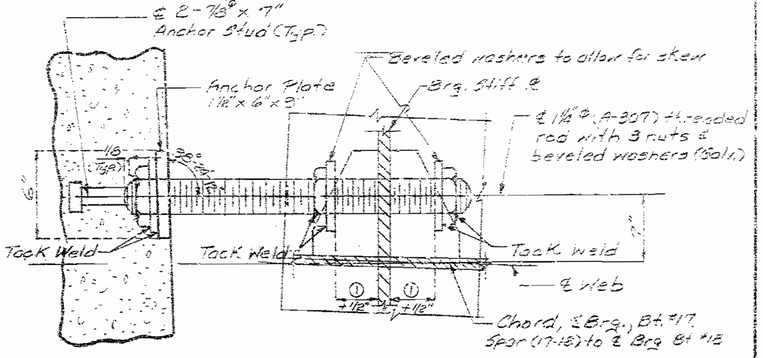

PART SECTION SHOWING RESTRAINER PLACEMENT AT GIRDERS NO. 2 THRU NO. 5

Note: Restrainer to be placed on opposite side of Girder No. 1

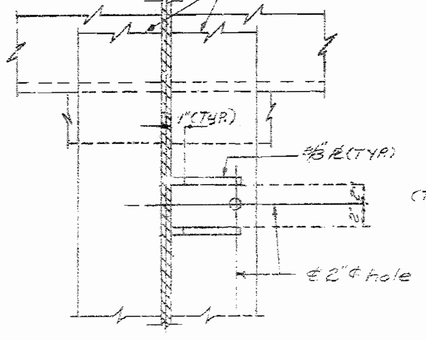

SECTION A-A

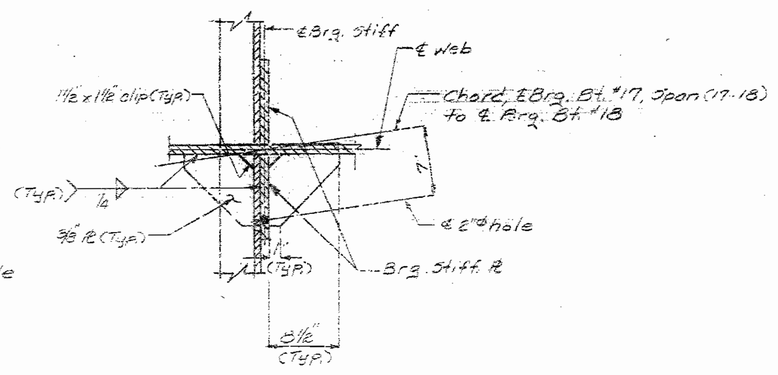

SECTION B-B

Note: 2" ⌀ hole in bearing stiffener R. shall be drilled to align with 1 1/4" ⌀ threaded rods in order to maintain 1/4" clearance between 1 1/4" ⌀ threaded rod and edge of 2" ⌀ hole on all sides.

① E.-p. Gap @ 60°F

Note: A temporary threaded plug shall be inserted into each embedded hex nut in the diaphragm before concrete is poured. Plugs shall extend 1/8" into diaphragm concrete as shown in Part Section.

For location of expansion chords A-A, B-B & C-C, D-D & E-E, see bearing alignment sheet No. 16.

Weight of 3/8 plates, threaded rods, nuts, washers and anchor plates are included in weight of fabricated structural carbon steel.

3/8 plates and anchor plates shall be A-36 Steel.

Studs shall be in accordance with Section 1087.

DETAILS OF EARTHQUAKE RESTRAINERS AT INT. BT. NO. 17

DETAILED (MA) 1988
CHECKED (JL) 11-88

SEE CHART Sheet No. 15 of 95

⚠ Revised Dec. 6, 1989

JACKSON COUNTY

A-2733

STATE	PROJ. NO.	SHEET NO.
MO.		21

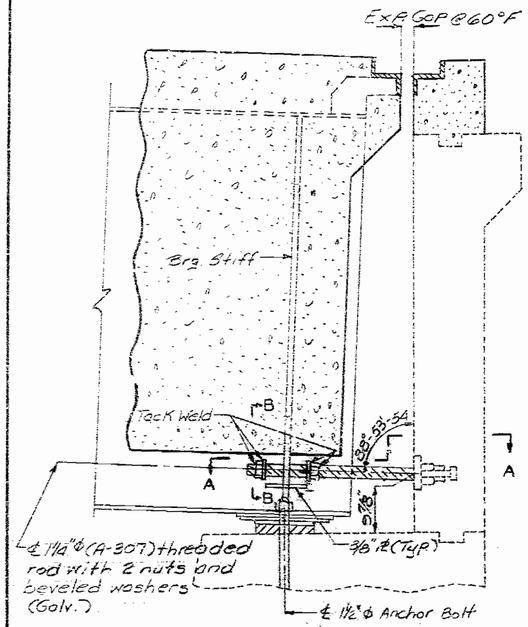

PART SECTION NEAR GIRDER AT END BENT NO. 21

Girder No.	①	②
1	144°-51'-15"	K-K
2	144°-38'-55"	L-L
3	144°-26'-45"	M-M
4	144°-14'-43"	N-N
5	144°-02'-49"	O-O

Note: 2" ϕ hole in bearing stiffener PL shall be drilled to align with ℄ threaded rod in order to maintain ¼" clearance between 1¼" ϕ threaded rod and edge of 2" ϕ hole on all sides.

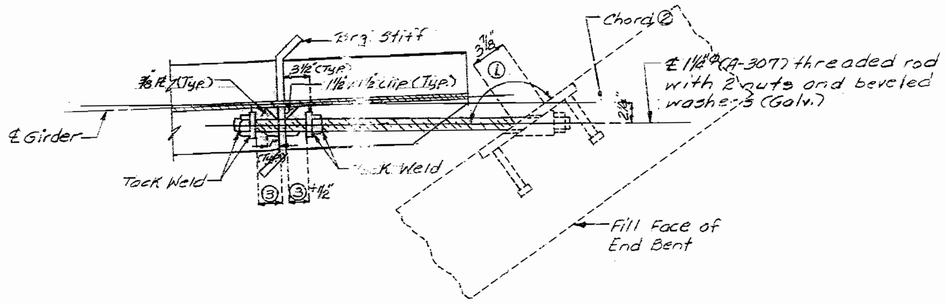

SECTION A-A

③ Exp. Gap @ 60°F x cosecant ①

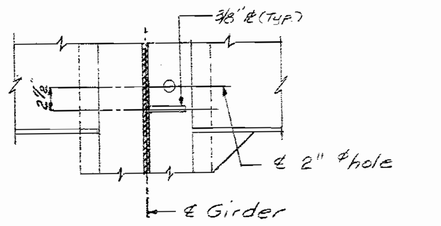

SECTION B-B

Note: Weight of ⅜" plates, threaded rods, nuts and washers are included in weight of fabricated structural carbon steel.
⅜" plates shall be A-36 steel.

DETAILS OF EARTHQUAKE RESTRAINERS AT BENT NO. 21

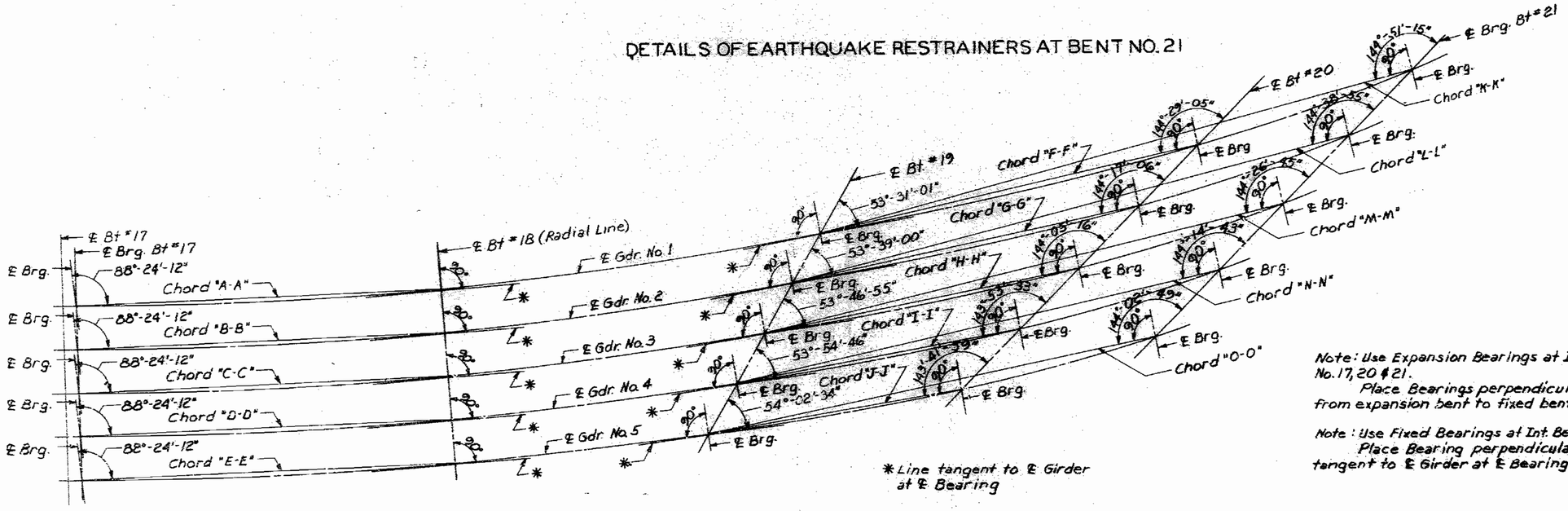

* Line tangent to ℄ Girder at ℄ Bearing

PLAN SHOWING BEARING ALIGNMENT
(PLATE GIRDER SPANS)

Note: Use Expansion Bearings at Int. Bents No. 17, 20 & 21.
Place Bearings perpendicular to chord from expansion bent to fixed bent as shown.

Note: Use Fixed Bearings at Int. Bents No. 18 & 19.
Place Bearing perpendicular to a line tangent to ℄ Girder at ℄ Bearing.

DETAILED MAY 1989
CHECKED July 1989

Note: This drawing is not to scale. Follow dimensions.

STATE	PROJ. NO.	SHEET NO.
MO.		22

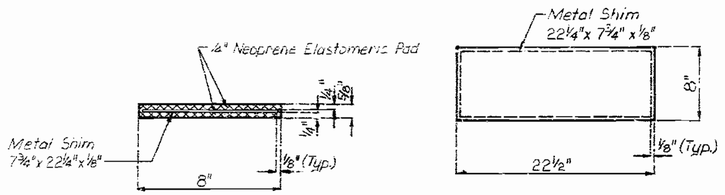

SIDE VIEW PLAN VIEW

BEARING PAD 8"X22½"X ⅝"

BENT NO.	2	3	5	6	7	9	10	11	12	14	15	16	TOTAL BEARINGS
SPAN	(1-2) & (2-3)	(2-3)	(4-5)	(6-7)	(6-7) & (7-8)	(8-9) & (9-10)	(9-10) & (10-11)	(10-11) & (11-12)	(11-12) & (12-13)	(13-14)	(15-16)	(15-16) & (16-17)	
NO. REQD.	10	5	5	5	10	10	10	10	10	5	5	10	95

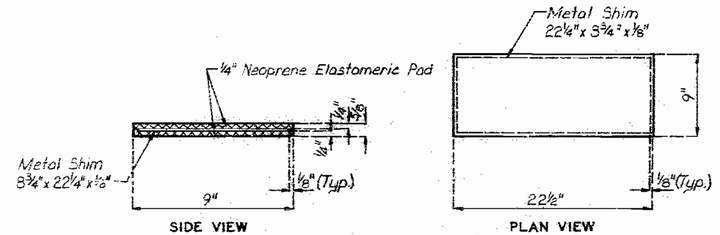

SIDE VIEW PLAN VIEW

BEARING PAD 9"X22½"X ⅝"

BENT NO.	3	5	6	14	15	TOTAL BEARINGS
SPAN	3-4	5-6	5-6	14-15	14-15	
NO. REQD.	5	5	5	5	5	25

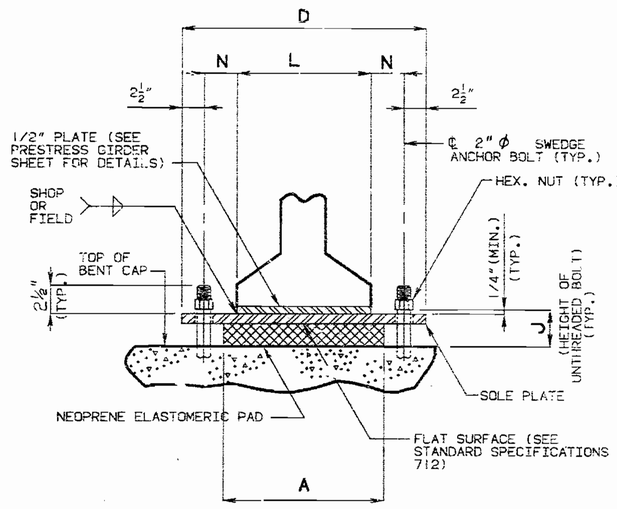

END VIEW

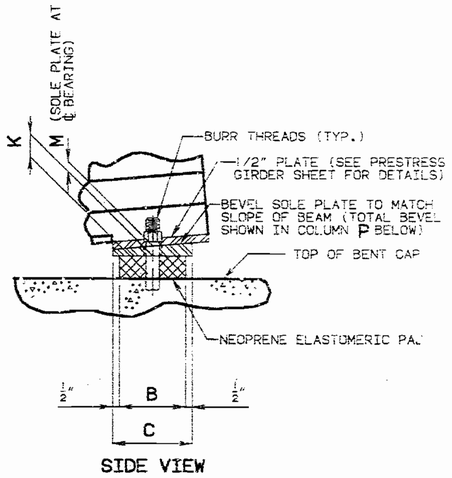

SIDE VIEW

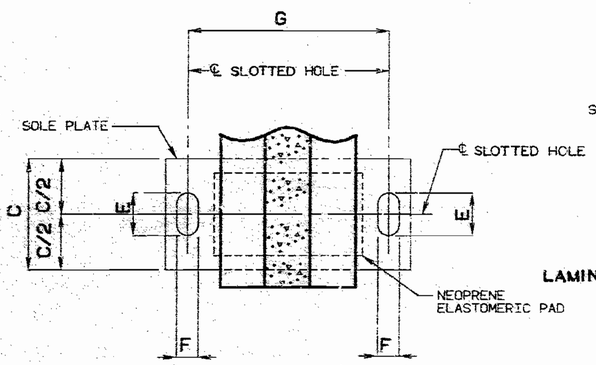

PART PLAN VIEW

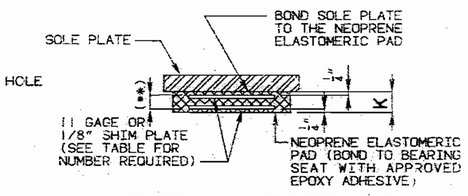

LAMINATED NEOPRENE ELASTOMERIC PAD

(**) LAYERS OF 1/2" ELASTOMER ALTERNATING WITH 11 GAGE OR 1/8" STEEL SHIM PLATE.

GENERAL NOTES:

ANCHOR BOLTS SHALL BE 2 "Ø A588 STEEL SWEDGED BOLTS AND SHALL EXTEND 18" INTO THE CONCRETE WITH A194-2, 2H OR A563-C, C3, D, DH, DH3 HEAVY HEXAGON NUTS. ACTUAL MANUFACTURER'S CERTIFIED MILL TEST REPORTS (CHEMICAL AND MECHANICAL) SHALL BE PROVIDED. (SWEDGING SHALL BE 1" LESS THAN THE EXTENSION INTO THE CONCRETE.)

ALL STRUCTURAL STEEL FOR THE SOLE PLATE, ANCHOR BOLTS AND THE HEAVY HEXAGON NUTS SHALL BE PAINTED WITH 2 COATS (5 MILS MIN.) OF INORGANIC ZINC WELD AREAS TO BE TOUCHED UP AFTER ASSEMBLY.

THE NEOPRENE ELASTOMERIC PADS SHALL BE 60 DUROMETER.

THE SOLE PLATE SHALL BE FURNISHED WITH THE BEARING AND FIELD OR SHOP WELDED TO THE GIRDERS.

STRUCTURAL STEEL FOR THE SOLE PLATE SHALL BE A-36.

PAYMENT FOR THE SOLE PLATE, ANCHOR BOLTS AND HEAVY HEXAGON NUTS WILL BE INCLUDED IN THE COST OF THE BEARING ASSEMBLY, SEE SPECIAL PROVISIONS.

THE ACCEPTED QUANTITY OF THE ELASTOMERIC BEARING ASSEMBLIES, COMPLETE-IN-PLACE, WILL BE PAID FOR AT THE CONTRACT UNIT PRICE FOR
LAMINATED NEOPRENE BEARING PADS
EACH.

NOTE: THE LOCATION OF THE ANCHOR BOLTS IN RELATION TO THE SLOTTED HOLES IN THE SOLE PLATE SHALL CORRESPOND WITH THE TEMPERATURE AT THE TIME OF ERECTION. AT 60° F. THE SLOTTED HOLES SHOULD CENTER ON THE ANCHOR BOLTS.

EXPANSION BEARINGS

BENT NO.	A	B	C	D	E	F	G	J	K	L	M	N	P	NUMBER OF SHIM PLATES(*)	NUMBER REQUIRED
4	18"	12"	13"	2'-10"	5½"	2⅛"	2'-5"	6¾"	5"	2'-0"	1½"	2½"	—	8	10
8	18"	12"	13"	2'-10"	5¾"	2⅛"	2'-5"	7⅜"	5⅝"	2'-0"	1½"	2½"	—	9	10
13	18"	10"	11"	2'-10"	5"	2⅛"	2'-5"	5½"	3¾"	2'-0"	1½"	2½"	—	6	5
13&17	18"	12"	13"	2'-10"	5"	2⅛"	2'-5"	5½"	3¾"	2'-0"	1½"	2½"	—	6	10(***)

TOTAL BEARINGS	35

(*) THE REQUIRED SHIM PLATE SHALL BE PLACED BETWEEN EQUAL LAYERS OF ELASTOMER AND MOLDED TOGETHER TO FORM AN INTEGRAL UNIT.

(***) 5 bearings for Bent No. 13 and 5 bearings for Bent No. 17.

LAMINATED NEOPRENE ELASTOMERIC BEARINGS

P/S 'N' BRG.	REVISED	FEB. 1989
		JAN. 1980

DETAILED July 1989
CHECKED July 1989

STATE	PROJ. NO.	SHEET NO.
MO.		25

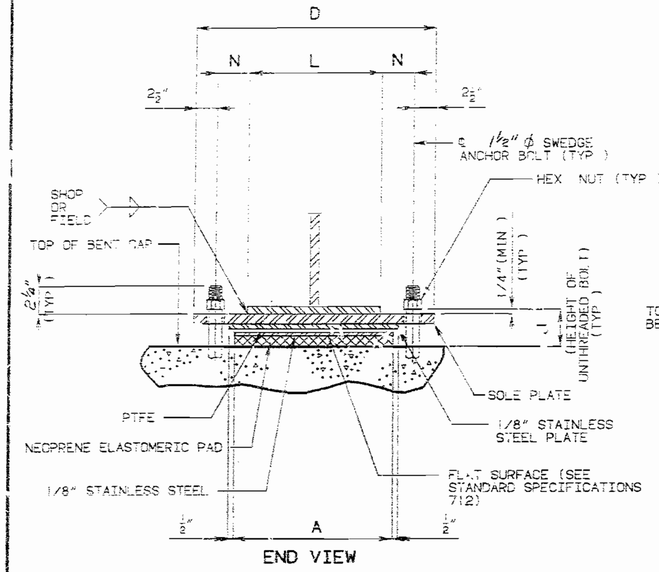

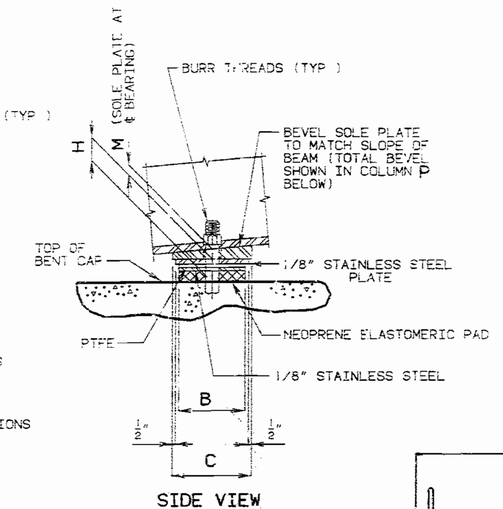

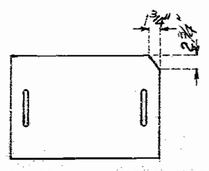

SOLE PLATE CLIPPING DETAIL
(Bent No 21 Only)

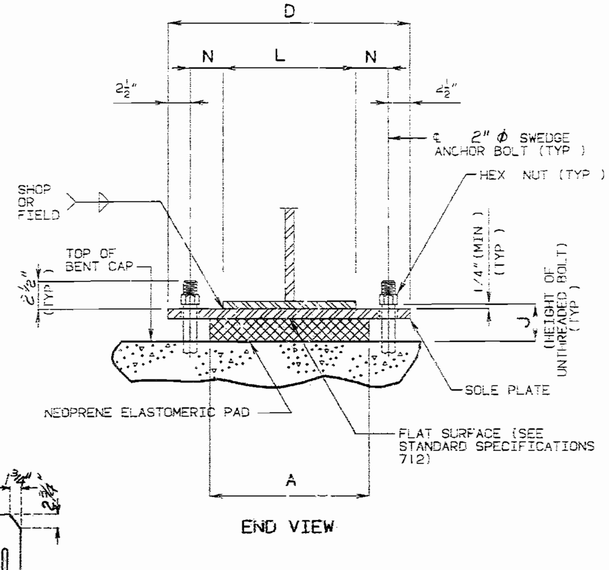

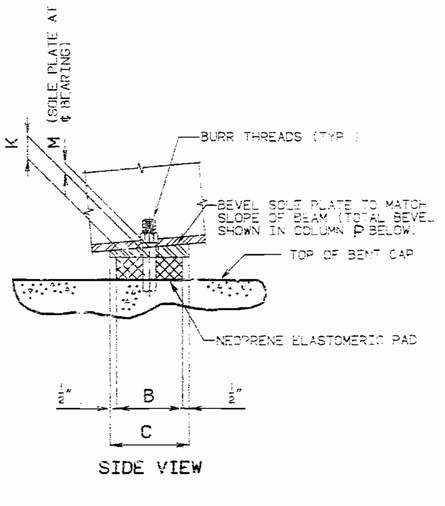

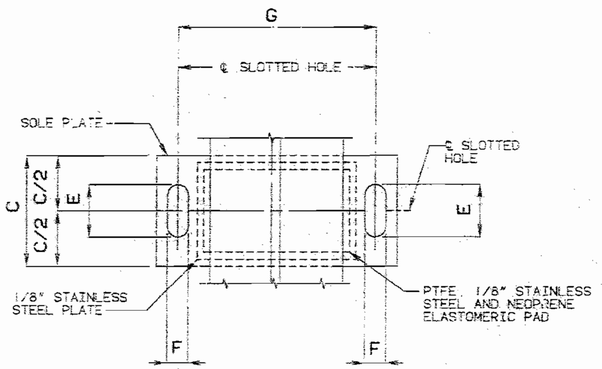

NOTE: THE LOCATION OF THE ANCHOR BOLTS IN RELATION TO THE SLOTTED HOLES IN THE SOLE PLATE SHALL CORRESPOND WITH THE TEMPERATURE AT THE TIME OF ERECTION. AT 60° F. THE SLOTTED HOLES SHOULD CENTER ON THE ANCHOR BOLTS.

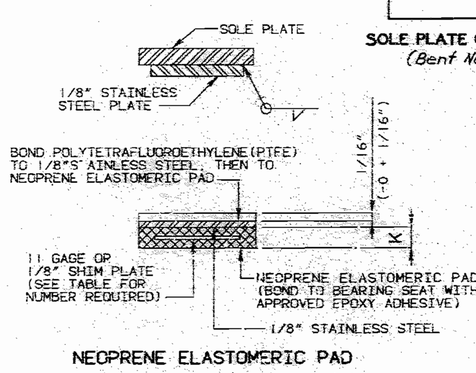

NEOPRENE ELASTOMERIC PAD

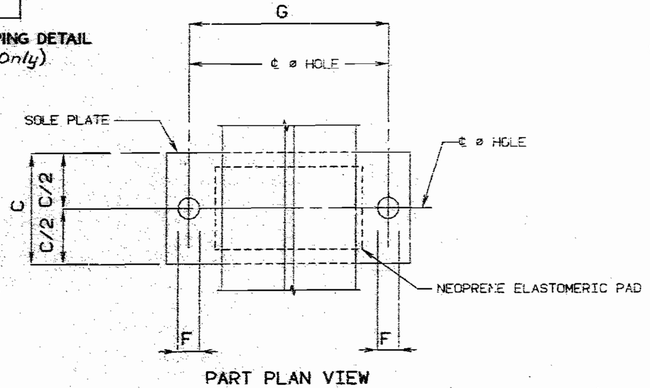

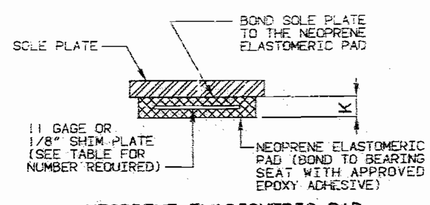

NEOPRENE ELASTOMERIC PAD

① Gdr. #1 & #3 = 16"
Gdr. #2 & #4 = 15"
Gdr. #5 = 14"

② Gdr. #1 & #3 = 3"
Gdr. #2 & #4 = 3½"
Gdr. #5 = 4"

③ Gdr. #1 = 20"
Gdr. #2 & #4 = 18"
Gdr. #3 = 17"
Gdr. #5 = 15"

④ Gdr. #1 = 2"
Gdr. #2 & #4 = 3½"
Gdr. #3 = 4"
Gdr. #5 = 4½"

PTFE SLIDING BEARINGS

BENT NO.	A	B	C	D	E	F	G	H	J	K	L	M	N	P	NUMBER OF SHIM PLATES(*)	NUMBER REQUIRED
17	20"	13"	19"	30"	6⅜"	1⅝"	25"	2 1/16"	3 13/16"	1¾"	20"	1½"	2½"	--	2	5
20	18"	30"	35"	27"	6"	1⅝"	22"	3 5/16"	5 5/16"	3"	①	1¾"	②	½"	4	5
21	16"	11"	17½"	25"	7½"	1⅝	20"	1 1/16"	3⅜"	1⅛"	10"	1 1/16"	5"	⅜"	1	5
															TOTAL BEARINGS	15

(*) THE REQUIRED SHIM PLATE SHALL BE PLACED BETWEEN EQUAL LAYERS OF ELASTOMER AND MOLDED TOGETHER TO FORM AN INTEGRAL UNIT

DETAILS OF TYPE 'N' PTFE BEARINGS

GENERAL NOTES:

ANCHOR BOLTS SHALL BE ⑤ "ø A588 STEEL SWEDGED BOLTS AND SHALL EXTEND ⑥ INTO THE CONCRETE WITH A194-2, 2H OR A563-C, C3, D, DH, DH3 HEAVY HEXAGON NUTS. ACTUAL MANUFACTURER'S CERTIFIED MILL TEST REPORTS (CHEMICAL AND MECHANICAL INCLUDING PROOF LOADS) SHALL BE PROVIDED. SWEDGING SHALL BE 1" LESS THAN THE EXTENSION INTO THE CONCRETE.)

⑤ 1½" for Bt. No. 17, 20 & 21
2" for Bt. No 18 & 19

⑥ 15" for 1½" ϕ Anchor Bolt
18" for 2" ϕ Anchor Bolt

ALL STRUCTURAL STEEL FOR THE SOLE PLATE, ANCHOR BOLTS AND THE HEAVY HEXAGON NUTS SHALL BE PAINTED WITH 2 COATS (5 MILS MIN.) OF INORGANIC ZINC. WELD AREAS TO BE TOUCHED UP AFTER ASSEMBLY.

WEIGHT OF THE ANCHOR BOLTS AND HEAVY HEXAGON NUTS FOR BEARINGS SHALL BE INCLUDED IN THE WEIGHT OF THE FABRICATED STRUCTURAL STEEL.

THE NEOPRENE ELASTOMERIC PADS SHALL BE 70 DUROMETER.

THE SOLE PLATE SHALL BE FURNISHED WITH THE BEARING AND FIELD OR SHOP WELDED TO THE GIRDERS.

STRUCTURAL STEEL FOR THE SOLE PLATE SHALL BE A-36.

PAYMENT FOR THE SOLE PLATE WILL BE INCLUDED IN THE COST OF THE BEARING ASSEMBLY. SEE SPECIAL PROVISIONS.

THE ACCEPTED QUANTITY OF THE ELASTOMERIC BEARING ASSEMBLIES, COMPLETE-IN-PLACE, WILL BE PAID FOR AT THE CONTRACT UNIT PRICE FOR TYPE "N" PTFE BEARINGS, EACH AND LAMINATED NEOPRENE BEARING PADS (STEEL STRUCTURES), EACH.

FIXED BEARINGS

BENT NO.	A	B	C	D	F	G	J	K	L	M	N	P	NUMBER OF SHIM PLATES(*)	NUMBER REQUIRED
18	20"	34"	35"	31"	2⅛"	26"	5½"	3⅝"	21"	1⅝"	2½"	¼"	5	5
19	19"	32"	33	30"	2⅛"	25	5 3/16"	3⅝"	③	1 1/16"	④	⅜"	5	5
													TOTAL BEARINGS	10

(*) THE REQUIRED SHIM PLATE SHALL BE PLACED BETWEEN EQUAL LAYERS OF ELASTOMER AND MOLDED TOGETHER TO FORM AN INTEGRAL UNIT

DETAILS OF LAMINATED NEOPRENE BEARINGS

REVISED	FEB 1989
STL 'N' BRG	JAN 1980

DETAILED FEB. 1989
CHECKED July 1989

NOTE: THIS DRAWING IS NOT TO SCALE. FOLLOW DIMENSIONS.

STATE	PROJ. NO.	SHEET NO.
MO.		24

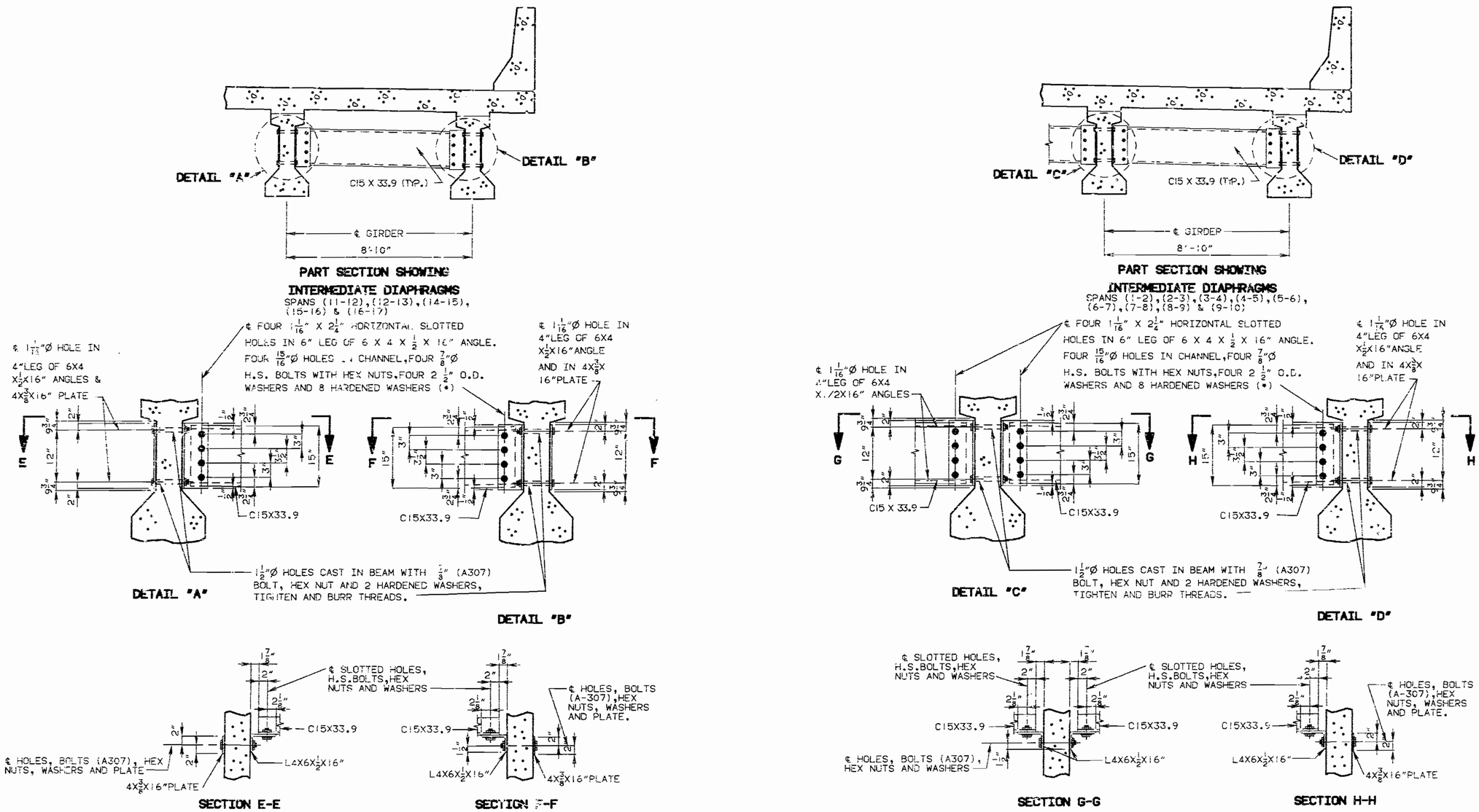

NOTE:

(•) IN LIEU OF 2 1/2" O. D. WASHERS, CONTRACTOR MAY SUBSTITUTE A 3/16" (MIN. THICKNESS) PLATE WITH FOUR 15/16"Ø HOLES AND 1 HARDENED WASHER PER BOLT.

ALL DIAPHRAGM MATERIALS INCLUDING BOLTS, NUTS AND WASHERS SHALL BE GALVANIZED.

FABRICATED STRUCTURAL STEEL SHALL BE A36 EXCEPT AS NOTED.

PAYMENT FOR FURNISHING AND INSTALLING STEEL INTERMEDIATE DIAPHRAGMS SHALL BE INCLUDED IN CONTRACT UNIT PRICE FOR PRESTRESSED CONCRETE I-GIRDERS.

SHOP DRAWINGS WILL BE REQUIRED FOR STEEL INTERMEDIATE DIAPHRAGMS AND ANGLE CONNECTIONS.

NOTE: SEE SHEETS NO.20 & NO.21 FOR PLAN SHOWING LOCATION OF INTERMEDIATE DIAPHRAGMS.

DETAILED JULY 1989
CHECKED JULY 1989

NOTE: THIS DRAWING IS NOT TO SCALE. FOLLOW DIMENSIONS.

SHEET NO. 19 OF 75.

JACKSON COUNTY

A-2733

STATE	PROJ. NO.	SHEET NO.
MO.		25

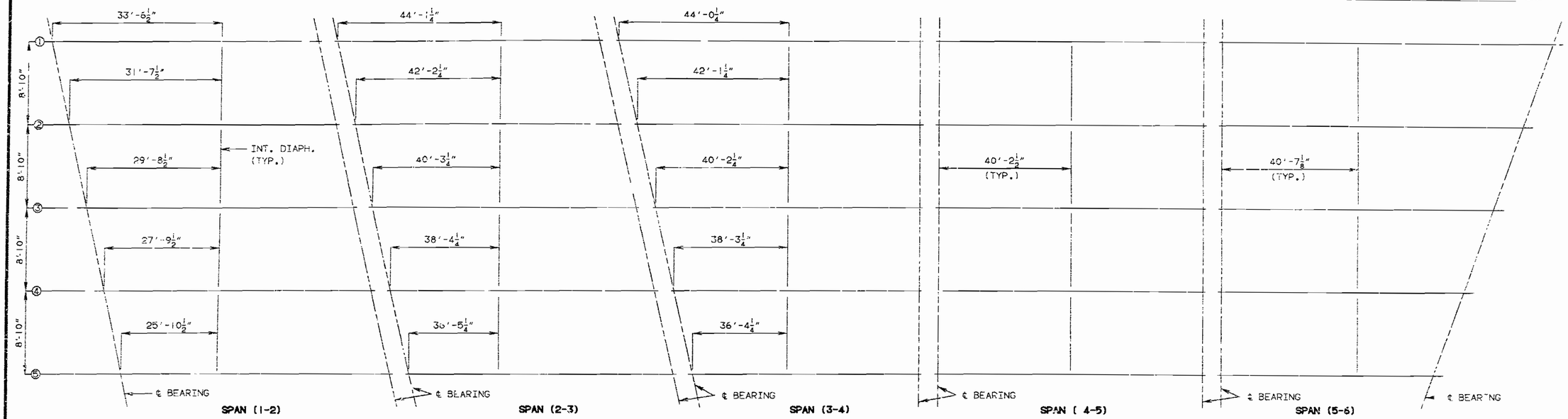

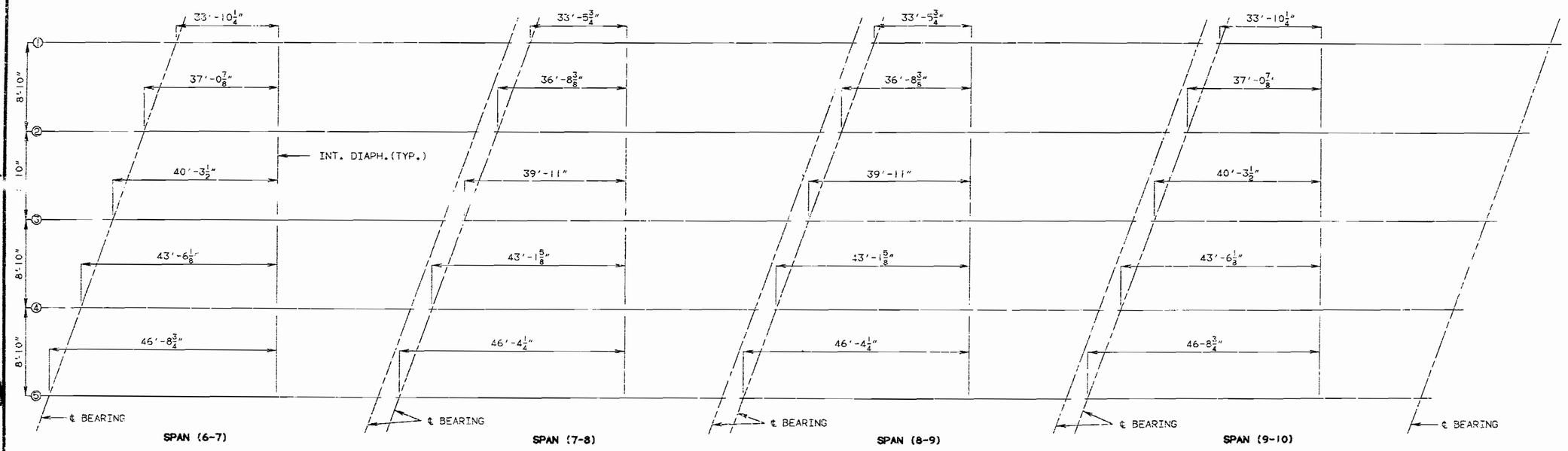

PART PLAN SHOWING LOCATION OF INT. DIAPHRAGMS

NOTE: FOR DETAILS OF INTERMEDIATE DIAPHRAGMS SEE SHEET NO. 19.
DIMENSIONS SHOWN ARE HORIZONTAL.

DETAILED JULY 1989
CHECKED JULY 1989

NOTE: THIS DRAWING IS NOT TO SCALE. FOLLOW DIMENSIONS.

STATE	PROJ. NO.	SHEET NO.
MO.		26

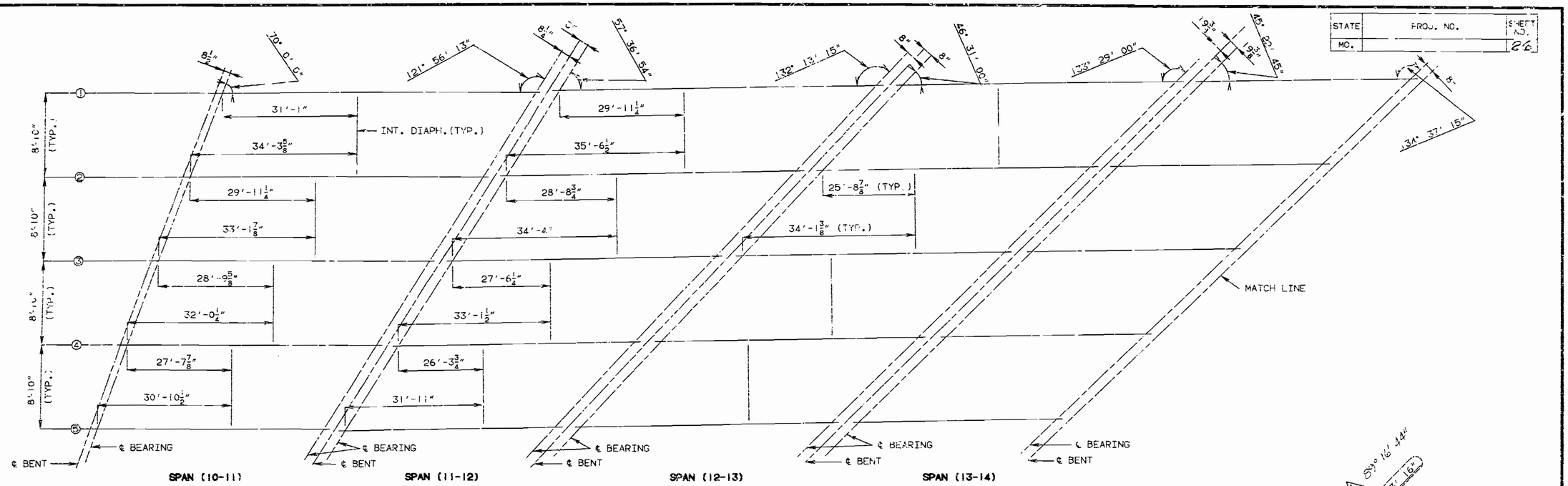

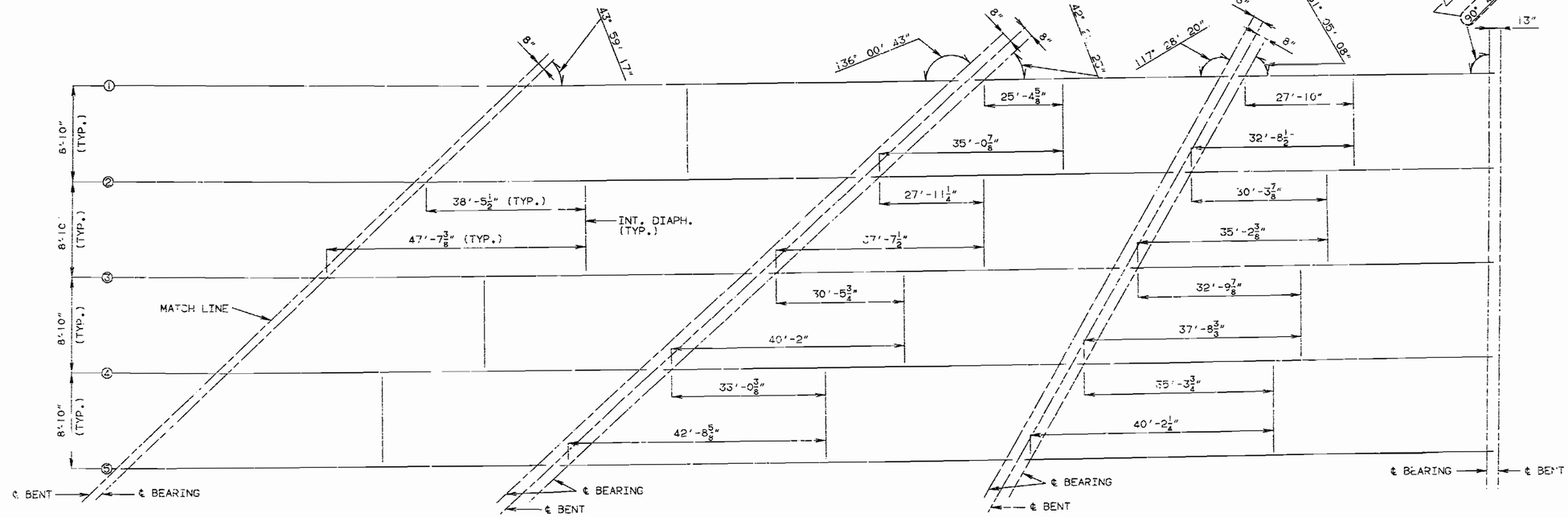

PART PLAN SHOWING PRESTRESSED GIRDER LAYOUT AND LOCATION OF INT. DIAPHRAGMS

NOTE: FOR DETAILS OF INTERMEDIATE DIAPHRAGMS SEE SHEET NO. 19.
DIMENSIONS SHOWN ARE HORIZONTAL.

DETAILED JULY 1989
CHECKED JULY 1989

NOTE: THIS DRAWING IS NOT TO SCALE. FOLLOW DIMENSIONS.

SHEET NO. 21 OF 75. ⚠ Revised Dec. 6, 1989

JACKSON COUNTY

A-2733

STATE	PROJ. NO	SHEET NO
MO		27

NOTE:

CONCRETE FOR PRESTRESSED GIRDERS SHALL BE CLASS A1 WITH Fc = 5,000 PSI.

(+) INDICATES PRESTRESSED STRAND.

USE 14 STRANDS WITH AN INITIAL PRESTRESS FORCE OF 434 KIPS.

PRESTRESSING TENDONS SHALL BE UNCOATED, SEVEN-WIRE, LOW RELAXATION STRANDS. - ½ INCH DIAMETER CONFORMING TO A.S.T.M. A203, GRADE 270. SEE MO. STD. SPECIFICATIONS 705.4.8.

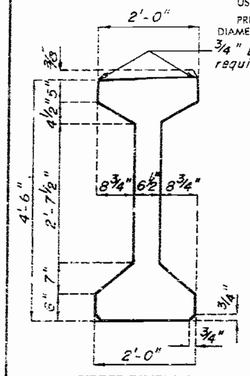

GIRDER DIMENSIONS

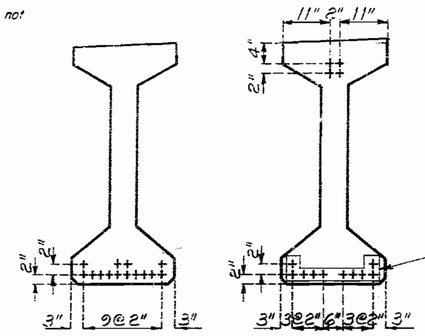

CL OF GIRDER END OF GIRDER

STRAND ARRANGEMENTS

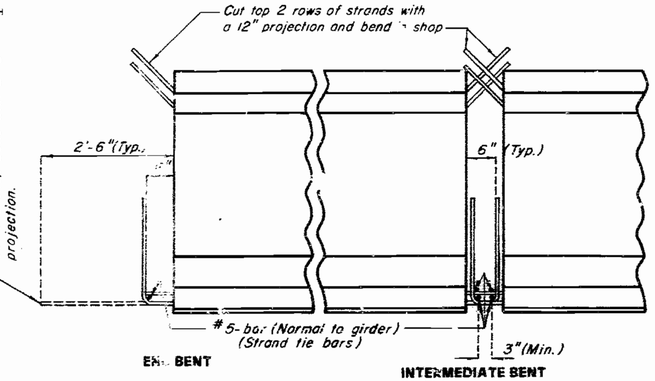

END BENT INTERMEDIATE BENT

STRAND DETAILS AT GIRDER ENDS

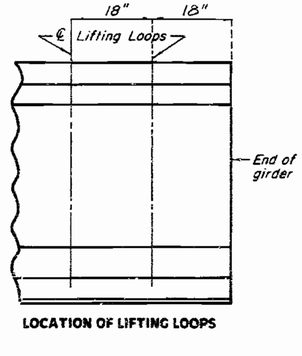

LOCATION OF LIFTING LOOPS

BILL OF REINFORCING STEEL - EACH GIRDER

NO.	SIZE & MARK	ACTUAL LENGTH	SHAPE	BENDING DIAGRAMS
4	6 A1	31'-1"	20	
130	4 B1	5'-11"	11	
4	6 B2	5'-4"	11	
65	4 C1	2'-2"	10	
130	4 D1	3'-0"	9	

SHAPE 9 SHAPE 20 SHAPE 10 SHAPE 11

NOTE:

ALL DIMENSIONS IN BENDING DIAGRAM ARE OUT TO OUT.

HOOKS AND BENDS SHALL BE IN ACCORDANCE WITH THE CRSI MANUAL OF STANDARD PRACTICE FOR DETAILING REINFORCED CONCRETE STRUCTURES STIRRUP AND TIE DIMENSIONS.

ACTUAL LENGTHS ARE MEASURED ALONG CENTERLINE BAR TO THE NEAREST INCH.

MINIMUM CLEARANCE TO REINFORCING SHALL BE 1".

ALL REINFORCEMENT SHALL BE GRADE 60.

THE TWO D1 BARS MAY BE FURNISHED AS ONE BAR AT THE FABRICATOR'S OPTION.

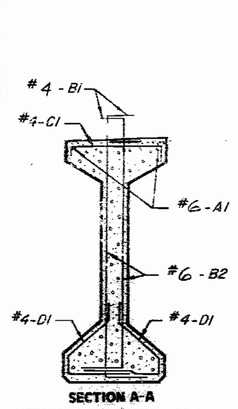

SECTION A-A

(STRANDS NOT SHOWN FOR CLARITY)

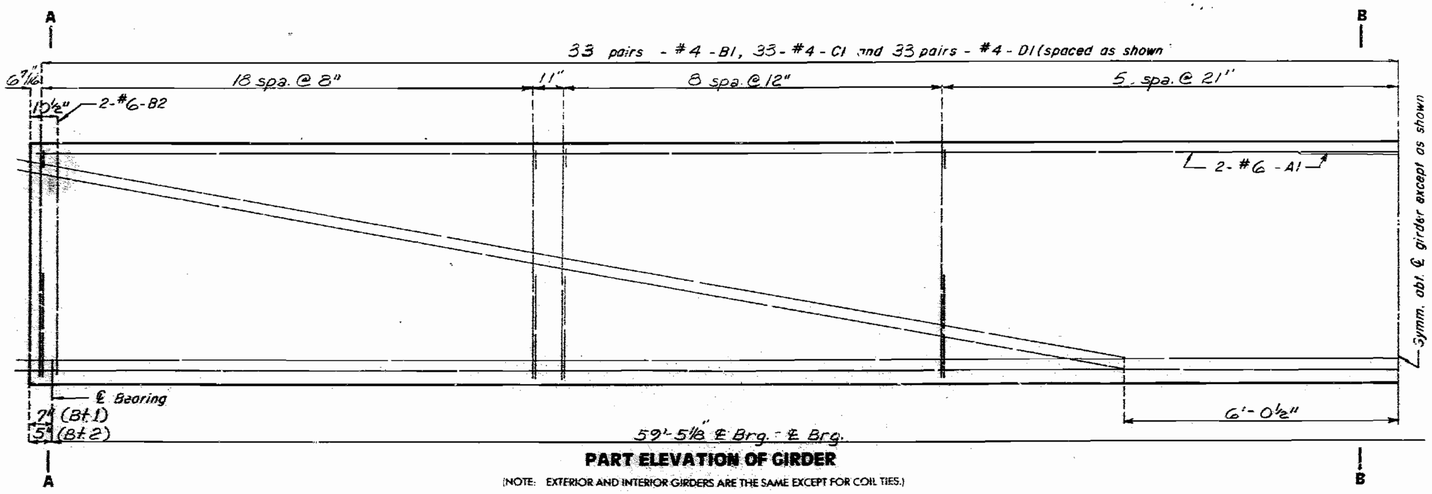

PART ELEVATION OF GIRDER

(NOTE: EXTERIOR AND INTERIOR GIRDERS ARE THE SAME EXCEPT FOR COIL TIES.)

SPAN (1-2)

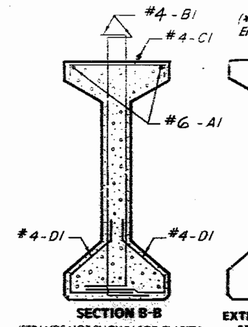

SECTION B-B

(STRANDS NOT SHOWN FOR CLARITY)

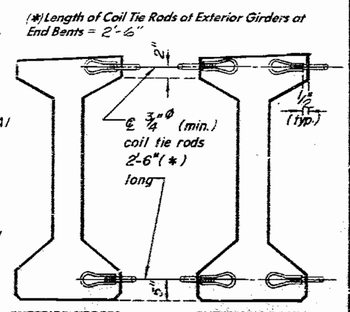

EXTERIOR GIRDERS AT INT. BENTS

EXTERIOR GIRDERS AT END BENTS INTERIOR GIRDERS AT ALL BENTS

DETAILS OF COIL TIES

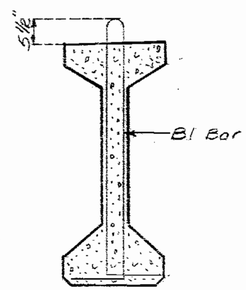

B1 BAR PERMISSIBLE ALTERNATE SHAPE

NOTE:

COST OF 3/4"Ø COIL TIE RODS PLACED IN DIAPHRAGMS IS INCLUDED IN CONTRACT UNIT PRICE FOR PRESTRESSED CONCRETE MEMBERS.

COIL TIES SHALL BE HELD IN PLACE IN THE FORMS BY SLOTTED WIRE-SETTING-STUDS PROJECTING THRU FORMS. STUDS ARE TO BE LEFT IN PLACE OR REPLACED WITH TEMPORARY PLUGS UNTIL GIRDERS ARE ERECTED AND THEN REPLACED BY COIL TIE RODS.

NOTE:

The 1½"Ø holes shall be cast in the web for steel intermediate diaphragms. Drilling is not allowed.

For Girder Camber Diagram, see Sh. No. 55

For location of Coil ties, see sheets Nos. 7 and 37.

For details of intermediate diaphragms, see sheets Nos. 19 and 20.

For location of Coil Inserts for slab drains, see Sh. No. 62.

SPS 5.5.6½ FEB. 1974 | REVISED JUNE 1987

DETAILED APRIL 1988

CHECKED JULY 1989

NOTE:

CONCRETE FOR PRESTRESSED GIRDERS SHALL BE CLASS A1 WITH f'c = 5,000 PSI.

(#) INDICATES PRESTRESSED STRAND.

USE 22 STRANDS WITH AN INITIAL PRESTRESS FORCE OF 122 KIPS.

PRESTRESSING TENDONS SHALL BE UNCOATED, SEVEN-WIRE, LOW RELAXATION STRANDS, ½ INCH DIAMETER CONFORMING TO A.A.S.H.T.O. M203, GRADE 270. SEE MO. STD. SPECIFICATIONS 705.4.8.

STATE	PROJ. NO.	SHEET NO.
MO.		28

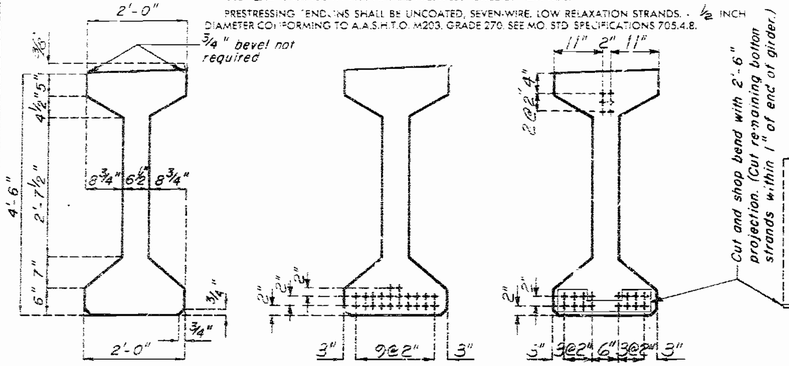

GIRDER DIMENSIONS

CL OF GIRDER

END OF GIRDER

STRAND ARRANGEMENTS

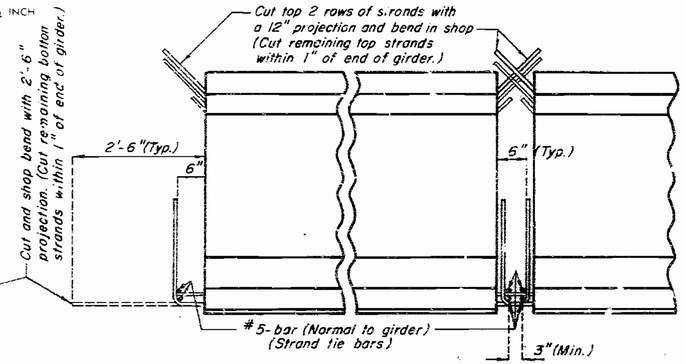

INTERMEDIATE BENT — INTERMEDIATE BENT

STRAND DETAILS AT GIRDER ENDS

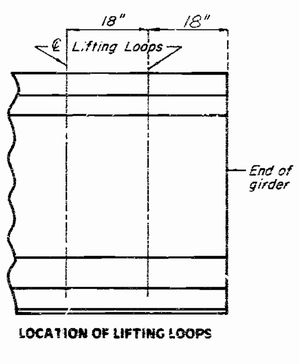

LOCATION OF LIFTING LOOPS

BILL OF REINFORCING STEEL - EACH GIRDER

NO.	SIZE & MARK	ACTUAL LENGTH	SHAPE	BENDING DIAGRAMS
4	6 A1	41'-7"	20	
210	4 B1	5'-11"	11	
8	6 B2	5'-4"	11	
105	4 C1	2'-2"	10	
210	4 D1	3'-0"	9	

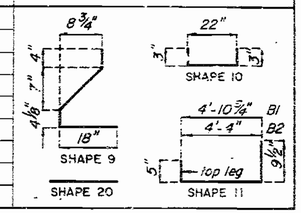

NOTE:

ALL DIMENSIONS IN BENDING DIAGRAM ARE OUT TO OUT.

HOOKS AND BENDS SHALL BE IN ACCORDANCE WITH THE CRSI MANUAL OF STANDARD PRACTICE FOR DETAILING REINFORCED CONCRETE STRUCTURES STIRRUP AND TIE DIMENSIONS.

ACTUAL LENGTHS ARE MEASURED ALONG CENTERLINE BAR TO THE NEAREST INCH.

MINIMUM CLEARANCE TO REINFORCING SHALL BE 1".

ALL REINFORCEMENT SHALL BE GRADE 60.

THE TWO D1 BARS MAY BE FURNISHED AS ONE BAR AT THE FABRICATOR'S OPTION.

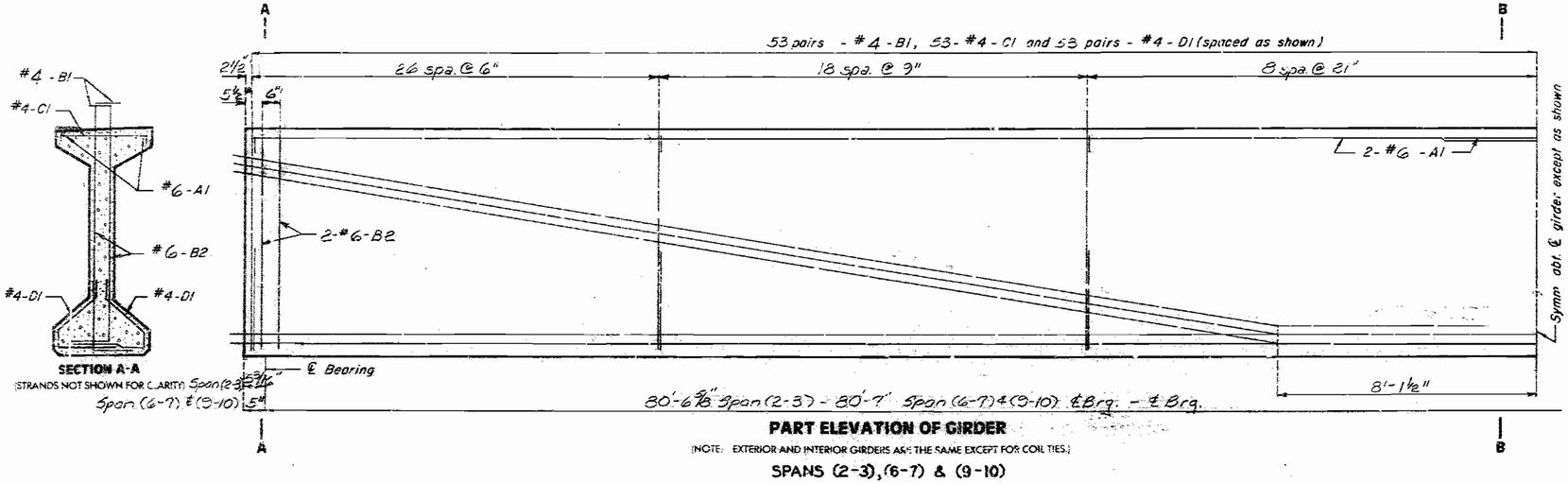

SECTION A-A
(STRANDS NOT SHOWN FOR CLARITY) Span (2-3) & Span (6-7) & (9-10)

PART ELEVATION OF GIRDER
(NOTE: EXTERIOR AND INTERIOR GIRDERS ARE THE SAME EXCEPT FOR COIL TIES.)
SPANS (2-3), (6-7) & (9-10)

Note: For detail of B1 bar permissible alternate shape, see Sh. No. 22.

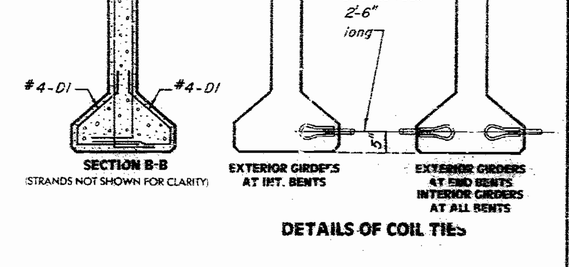

SECTION B-B
(STRANDS NOT SHOWN FOR CLARITY)

EXTERIOR GIRDERS AT INT. BENTS

EXTERIOR GIRDERS AT END BENTS
INTERIOR GIRDERS AT ALL BENTS

DETAILS OF COIL TIES

NOTE:

COST OF 3/4"Ø COIL TIE RODS PLACED IN DIAPHRAGMS IS INCLUDED IN CONTRACT UNIT PRICE FOR PRESTRESSED CONCRETE MEMBERS.

COIL TIES SHALL BE HELD IN PLACE IN THE FORMS BY SLOTTED WIRE-SETTING-STUDS PROJECTING THRU FORMS. STUDS ARE TO BE LEFT IN PLACE OR REPLACED WITH TEMPORARY PLUGS UNTIL GIRDERS ARE ERECTED AND THEN REPLACED BY COIL TIE RODS.

NOTE:

The 1½"Ø holes shall be cast in the web for steel intermediate diaphragms. Drilling is not allowed.

For Girder Camber Diagram, See Sh. No. 55.

For location of Coil Ties, see Sh. No. 37.

For details of intermediate diaphragms, see sheet Nos. 18 and 20.

For location of Coil Inserts, for slab drains, see Sh. No. 62.

FEB. 1974 | JUNE 1987

DETAILED APRIL 1989
CHECKED July 1989

STATE	PROJ. NO	SHEET NO.
MO		29

NOTE:

CONCRETE FOR PRESTRESSED GIRDERS SHALL BE CLASS A1 WITH f'c = 5,000 PSI.

(+) INDICATES PRESTRESSED STRAND.

USE 26 STRANDS WITH AN INITIAL PRESTRESS FORCE OF 834 KIPS.

PRESTRESSING TENDONS SHALL BE UNCOATED, SEVEN-WIRE, LOW RELAXATION STRANDS, - ½ INCH DIAMETER CONFORMING TO A.A.S.H.T.O. M203, GRADE 270. SEE MO. STD. SPECIFICATIONS 705.4.8.

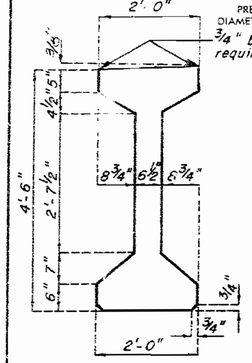

GIRDER DIMENSIONS

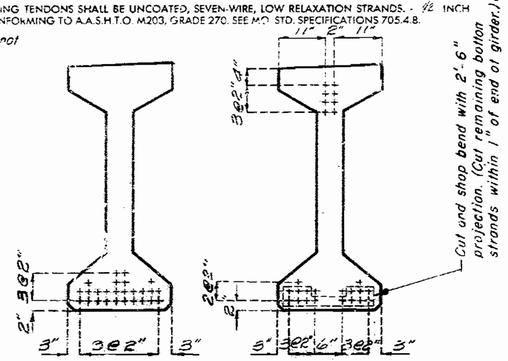

CL OF GIRDER END OF GIRDER

STRAND ARRANGEMENTS

Note: Prestressing strands at Int. Bt. #4 shall be trimmed to within ⅛" of concrete if exposed, or 1" of concrete if encased. Exposed ends of girders shall be given 2 coats of an asphalt paint. Ends of girders which will be encased in concrete diaphragms shall not be painted.

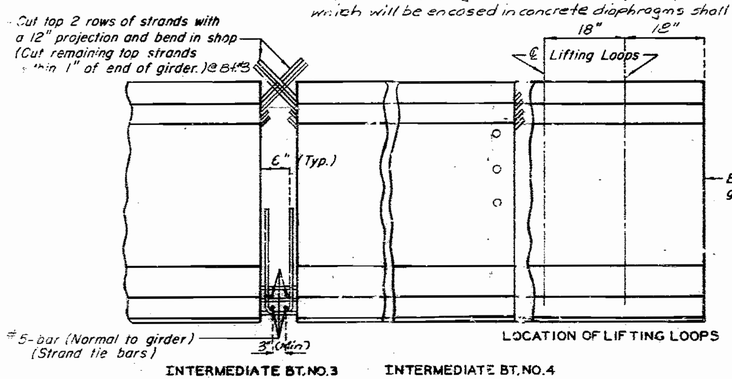

LOCATION OF LIFTING LOOPS

INTERMEDIATE BT. NO. 3 INTERMEDIATE BT. NO. 4

STRAND DETAILS AT GIRDER ENDS

BILL OF REINFORCING STEEL - EACH GIRDER

NO.	SIZE & MARK	ACTUAL LENGTH	SHAPE	BENDING DIAGRAMS
4	6 A1	"H"	20	
"L"	4 B1	5'-11"	11	
5	6 B2	5'-4"	11	
"K"	4 C1	2'-2"	10	
"L"	4 D1	3'-0"	9	

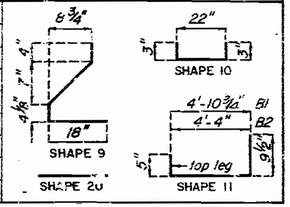

NOTE:

ALL DIMENSIONS IN BENDING DIAGRAM ARE OUT TO OUT.

HOOKS AND BENDS SHALL BE IN ACCORDANCE WITH THE CRSI MANUAL OF STANDARD PRACTICE FOR DETAILING REINFORCED CONCRETE STRUCTURES STIRRUP AND TIE DIMENSIONS.

ACTUAL LENGTHS ARE MEASURED ALONG CENTERLINE BAR TO THE NEAREST INCH.

MINIMUM CLEARANCE TO REINFORCING SHALL BE 1".

ALL REINFORCEMENT SHALL BE GRADE 60.

THE TWO D1 BARS MAY BE FURNISHED AS ONE BAR AT THE FABRICATOR'S OPTION.

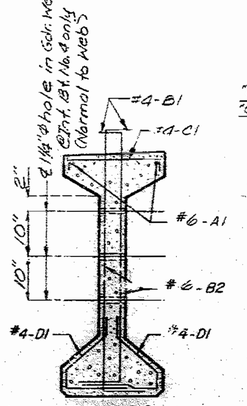

SECTION A-A
(STRANDS NOT SHOWN FOR CLARITY)

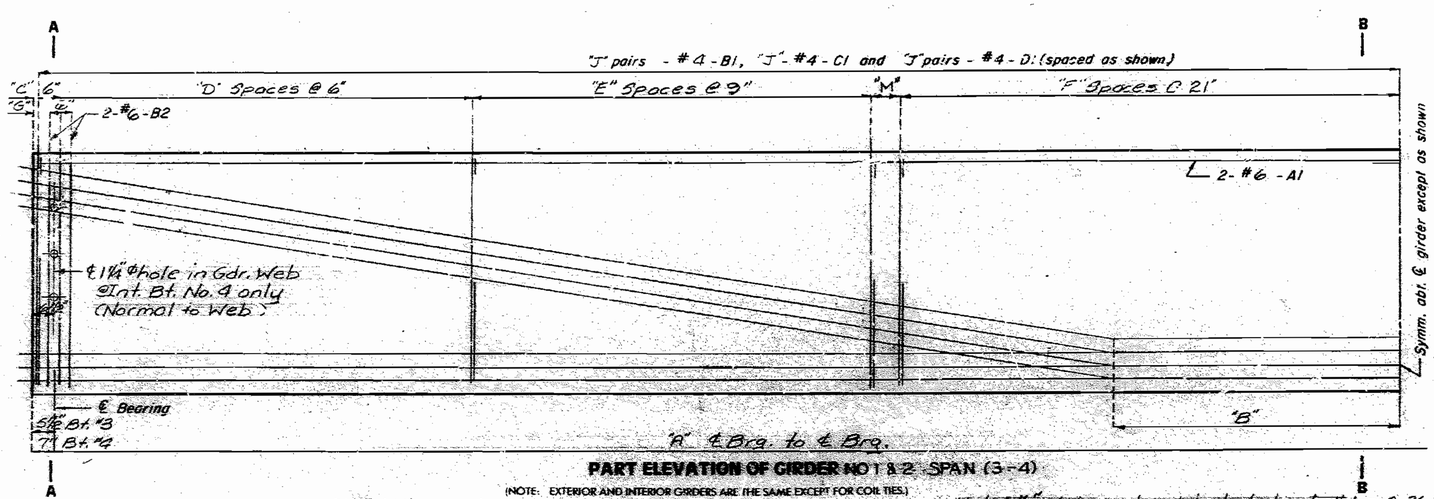

PART ELEVATION OF GIRDER NO 1 & 2 SPAN (3-4)

(NOTE: EXTERIOR AND INTERIOR GIRDERS ARE THE SAME EXCEPT FOR COIL TIES.)

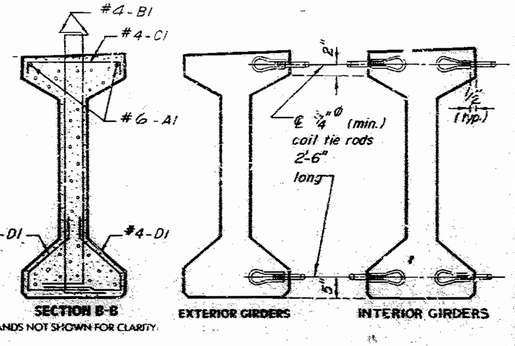

SECTION B-B
(STRANDS NOT SHOWN FOR CLARITY)

EXTERIOR GIRDERS INTERIOR GIRDERS

DETAILS OF COIL TIES
AT INT. BENT NO. 3

NOTE:

COST OF 3/4"ϕ COIL TIE RODS PLACED IN DIAPHRAGMS IS INCLUDED IN CONTRACT UNIT PRICE FOR PRESTRESSED CONCRETE MEMBERS.

COIL TIES SHALL BE HELD IN PLACE IN THE FORMS BY SLOTTED WIRE-SETTING ITEMS PROJECTING THRU FORMS. STUDS ARE TO BE LEFT IN PLACE OR REPLACED WITH TEMPORARY PLUGS UNTIL GIRDERS ARE ERECTED AND THEN REPLACED BY COIL TIE RODS.

TABLE OF DIMENSIONS												
GIRDER NO.	"A"	"B"	"C"	"D"	"E"	"F"	"G"	"H"	"J"	"K"	"L"	"M"
1	84'-2½"	8'-6"	2"	25	17	9	5"	43'-6"	54	107	214	11½"
2	82'-3½"	8'-4"	2"	23	17	9	5"	42'-7"	52	103	206	12"

Note: The 1½" ϕ holes at Int Bt. No. 4 shall be cast in girder web. Drilling is not allowed.

For detail of B1 bar permissible alternate shape, see Sh. No. 22.

For location of Coil Ties, see sheet Nos. 37 and 38.

For details of intermediate diaphragms, see sheet Nos. 19 and 20

For location of coil inserts for slab drains, see Sh. No. 62.

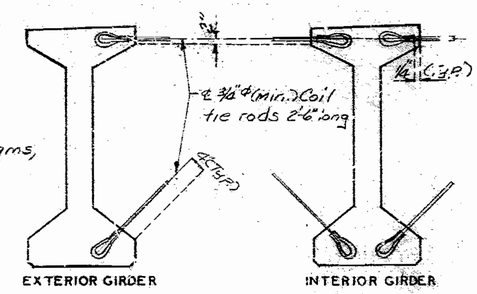

EXTERIOR GIRDER INTERIOR GIRDER

DETAILS OF COIL TIES
AT INT. BENT NO. 4

Note: ½" plate and welded studs shall be A-36 steel. Cost of furnishing, painting and installing ½" plates and welded studs in girders shall be included in price bid for Prestressed Concrete I-Girders, per each.

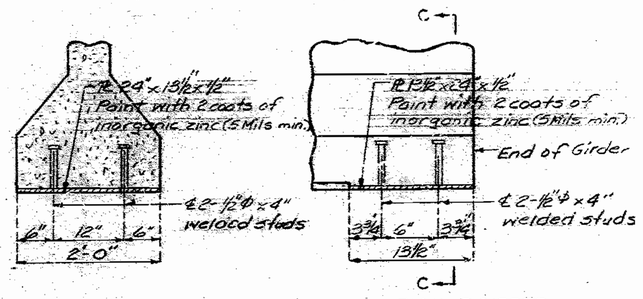

SECTION C-C

PART ELEVATION OF GIRDER AT INT. BENT NO. 4

NOTE:

The 1½" ϕ holes shall be cast in the web for steel intermediate diaphragms. Drilling is not allowed.

For details of Earthquake Restrainers, see Sh. No. 14

For details of Elastomeric Expansion Jt. Seal at Int. Bt. #4, see Sh. No. 57

For Girder Camber Diagram, see Sh. No. 55

REVISED JUNE 1989

DETAILED APRIL 1988
CHECKED July 1989

Note: This drawing is not to scale. Follow dimensions.

JACKSON COUNTY

A-2733

NOTE:

CONCRETE FOR PRESTRESSED GIRDERS SHALL BE CLASS A1 WITH f'_c = 5,000 PSI.

-I- INDICATES PRESTRESSED STRAND.

USE 22 STRANDS WITH AN INITIAL PRESTRESS FORCE OF 6.52 IPS.

PRESTRESSING TENDONS SHALL BE UNCOATED, SEVEN-WIRE, LOW RELAXATION STRANDS, ½ INCH DIAMETER CONFORMING TO A.A.S.H.T.O. M203, GRADE 270, SFE MO. STD. SPECIFICATIONS 703.4.8.

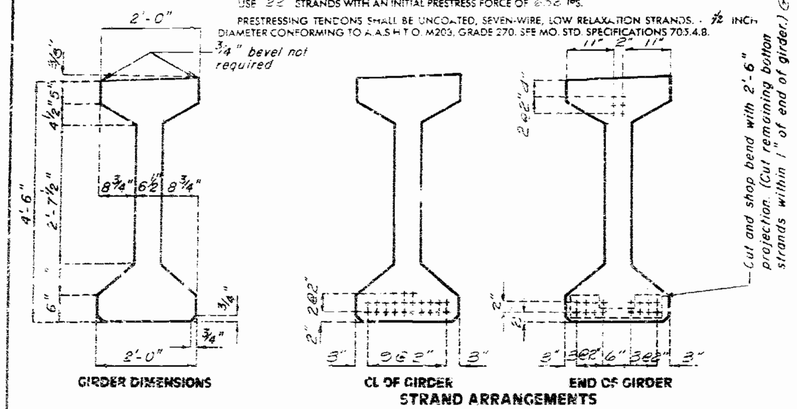

Note: Prestressing strands at int. Bt. #4 shall be trimmed to within 18" of concrete if exposed, or 1" of concrete if encased. Exposed ends of girders shall be given 2 coats of an asphalt paint. Ends of girders which will be encased in concrete diaphragms shall not be painted.

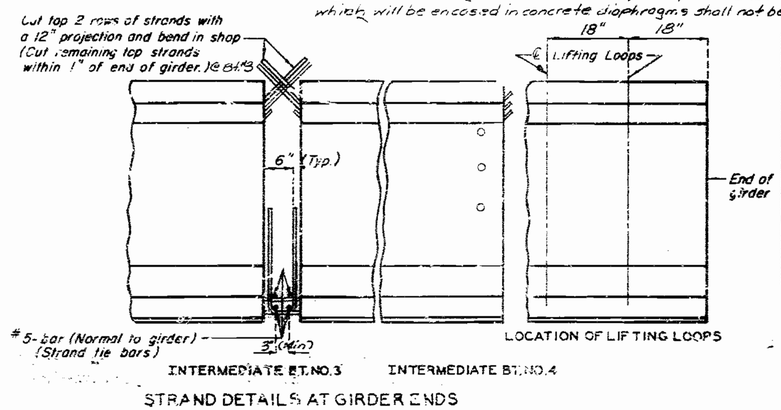

STRAND DETAILS AT GIRDER ENDS

STATE	PROJ. NO.	SHEET NO.
MO.		30

BILL OF REINFORCING STEEL - EACH GIRDER

NO.	SIZE & MARK	ACTUAL LENGTH	SHAPE	BENDING DIAGRAMS
4	6 A1	"H"	20	
"L"	4 B1	5'-11"	11	
8	6 B2	5'-4"	11	
"K"	4 C1	2'-2"	10	
"L"	4 D1	3'-0"	9	

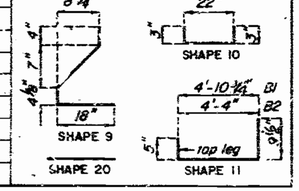

NOTE:

ALL DIMENSIONS IN BENDING DIAGRAM ARE OUT TO OUT.

HOOKS AND BENDS SHALL BE IN ACCORDANCE WITH THE CRSI MANUAL OF STANDARD PRACTICE FOR DETAILING REINFORCED CONCRETE STRUCTURES STIRRUP AND TIE DIMENSIONS.

ACTUAL LENGTHS ARE MEASURED ALONG CENTERLINE BAR TO THE NEAREST INCH.

MINIMUM CLEARANCE TO REINFORCING SHALL BE 1".

ALL REINFORCEMENT SHALL BE GRADE 60.

THE TWO D1 BARS MAY BE FURNISHED AS ONE BAR AT THE FABRICATOR'S OPTION.

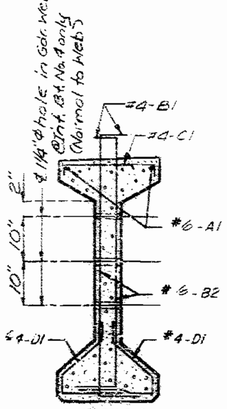

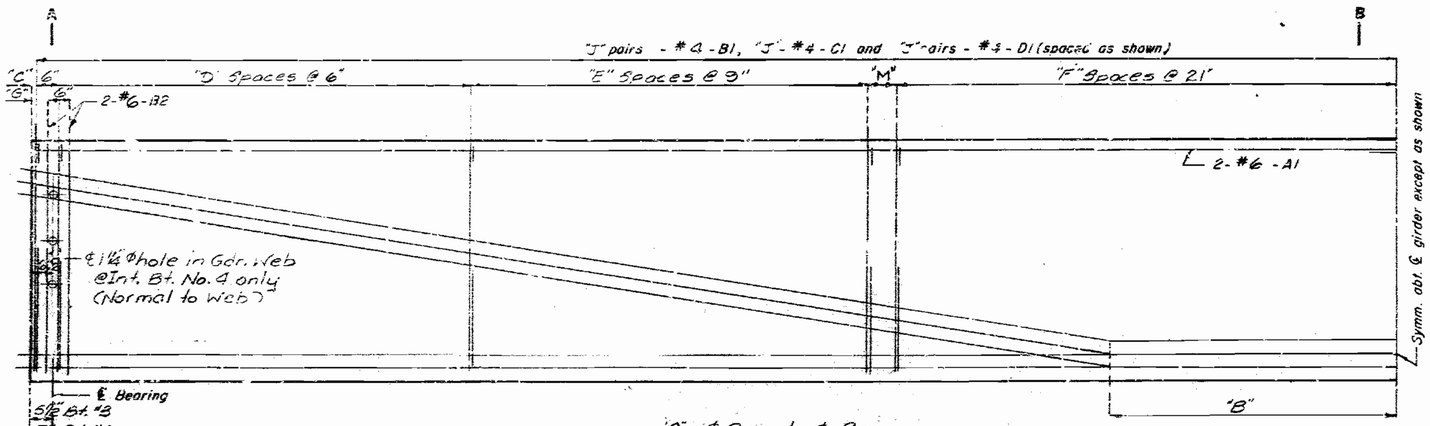

PART ELEVATION OF GIRDER NO. 3, 4 & 5 SPAN (3-4)

(NOTE: EXTERIOR AND INTERIOR GIRDERS ARE THE SAME EXCEPT FOR COIL TIES)

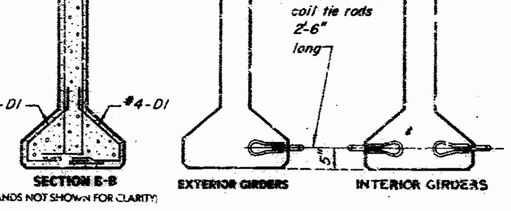

DETAILS OF COIL TIES
AT INT. BENT NO. 3

NOTE:

COST OF 3/4"Φ COIL TIE RODS PLACED IN DIAPHRAGMS IS INCLUDED IN CONTRACT UNIT PRICE FOR PRESTRESSED CONCRETE MEMBERS.

COIL TIES SHALL BE HELD IN PLACE IN THE FORMS BY SLOTTED WIRE-SETTING-STUDS PROJECTING THRU FORMS. STUDS ARE TO BE LEFT IN PLACE OR REPLACED WITH TEMPORARY PLUGS UNTIL GIRDERS ARE ERECTED AND THEN REPLACED BY COIL TIE RODS.

TABLE OF DIMENSIONS												
GIRDER NO.	"A"	"B"	"C"	"D"	"E"	"F"	"G"	"H"	"J"	"K"	"L"	"M"
3	80'-4½"	8'-1½"	2"	25	17	8	5"	41'-8"	53	105	210	9½"
4	78'-5½"	7'-11"	2"	23	16	8	5"	40'-8"	50	99	198	19"
5	76'-6½"	7'-9"	2"	22	16	8	5"	39'-8"	49	97	194	13½"

Note: The 1½"Φ holes at Int. Bt. No. 4 shall be cast in girder web. Drilling is not allowed.
For detail of B1 bar permissible alternate shape, see Sh. No. 22
For location of coil ties, see sheets Nos. 37 and 38.
For details of intermediate diaphragms see sheet Nos. 19 and 20.

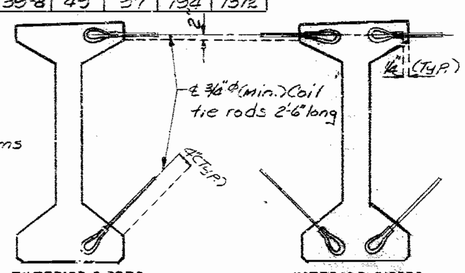

DETAILS OF COIL TIES
AT INT. BENT NO. 4

Note: 1½" plate and welded studs shall be "A" 36 steel.
Cost of furnishing, painting and installing 1½" plates and welded studs in girders shall be included in price bid for Prestressed Concrete I-Girders per each.

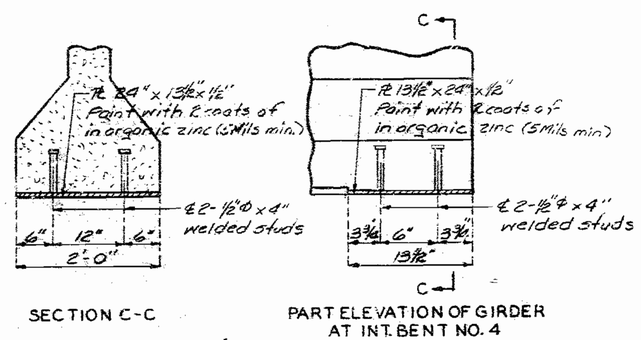

NOTE:

The 1½"Φ holes shall be cast in the web for steel intermediate diaphragms. Drilling is not allowed.

For details of Earthquake Restrainers, see Sh. No. 14.

For details of Elastomeric Expansion Jt. Seal at Int. Bt. #4, see Sh. No. 57.

For Girder Camber Diagram, see Sh. No. 55

DETAILED APRIL 1988
CHECKED July 1989

Note: This drawing is not to scale. Follow dimensions.

JACKSON COUNTY

A-2733

NOTE:

CONCRETE FOR PRESTRESSED GIRDERS SHALL BE CLASS A1 WITH f'_c = 5,000 PSI.

(+) INDICATES PRESTRESSED STRAND.

USE 22 STRANDS WITH AN INITIAL PRESTRESS FORCE OF 652 KIPS

PRESTRESSING TENDONS SHALL BE UNCOATED, SEVEN-WIRE, LOW RELAXATION STRANDS. - ½ INCH DIAMETER CONFORMING TO A.A.S.H.T.O. M203, GRADE 270. SEE MO. STD SPECIFICATIONS 705.4.8

STATE	PROJ. NO	SHEET NO
MO		31

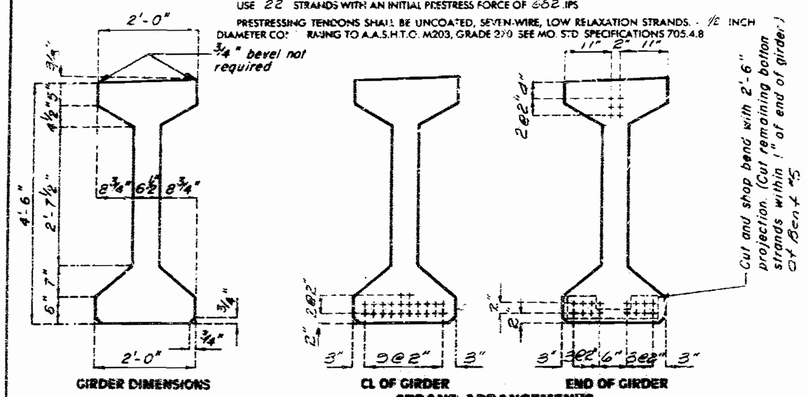

GIRDER DIMENSIONS — CL OF GIRDER — END OF GIRDER

STRAND ARRANGEMENTS

Note: Prestressing strands at Int. Bt. #3 shall be trimmed to within ⅛" of concrete if exposed, or 1" of concrete if encased. Exposed ends of girders shall be given 2 coats of an asphalt paint. Ends of girders which will be encased in concrete diaphragms shall not be painted.

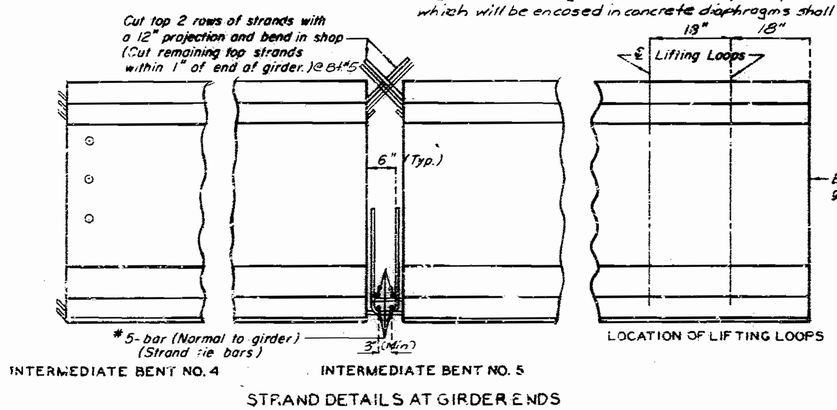

INTERMEDIATE BENT NO. 4 — INTERMEDIATE BENT NO. 5 — LOCATION OF LIFTING LOOPS

STRAND DETAILS AT GIRDER ENDS

BILL OF REINFORCING STEEL - EACH GIRDER

NO.	SIZE & MARK	ACTUAL LENGTH	SHAPE	BENDING DIAGRAMS
4	6 A1	41'-7"	20	
210	4 B1	5'-11"	11	
8	6 B2	5'-4"	11	
105	4 C1	2'-2"	10	
210	4 D1	3'-0"	9	

SHAPE 20 — SHAPE 10 — SHAPE 9 — SHAPE 11

NOTE:

ALL DIMENSIONS IN BENDING DIAGRAM ARE OUT TO OUT.

HOOKS AND BENDS SHALL BE IN ACCORDANCE WITH THE CRSI MANUAL OF STANDARD PRACTICE FOR DETAILING REINFORCED CONCRETE STRUCTURES STIRRUP AND TIE DIMENSIONS.

ACTUAL LENGTHS ARE MEASURED ALONG CENTERLINE BAR TO THE NEAREST INCH.

MINIMUM CLEARANCE TO REINFORCING SHALL BE 1".

ALL REINFORCEMENT SHALL BE GRADE 60.

THE TWO D1 BARS MAY BE FURNISHED AS ONE BAR AT THE FABRICATOR'S OPTION.

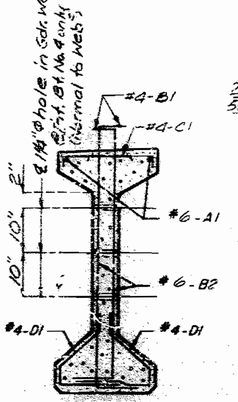

SECTION A-A (STRANDS NOT SHOWN FOR CLARITY)

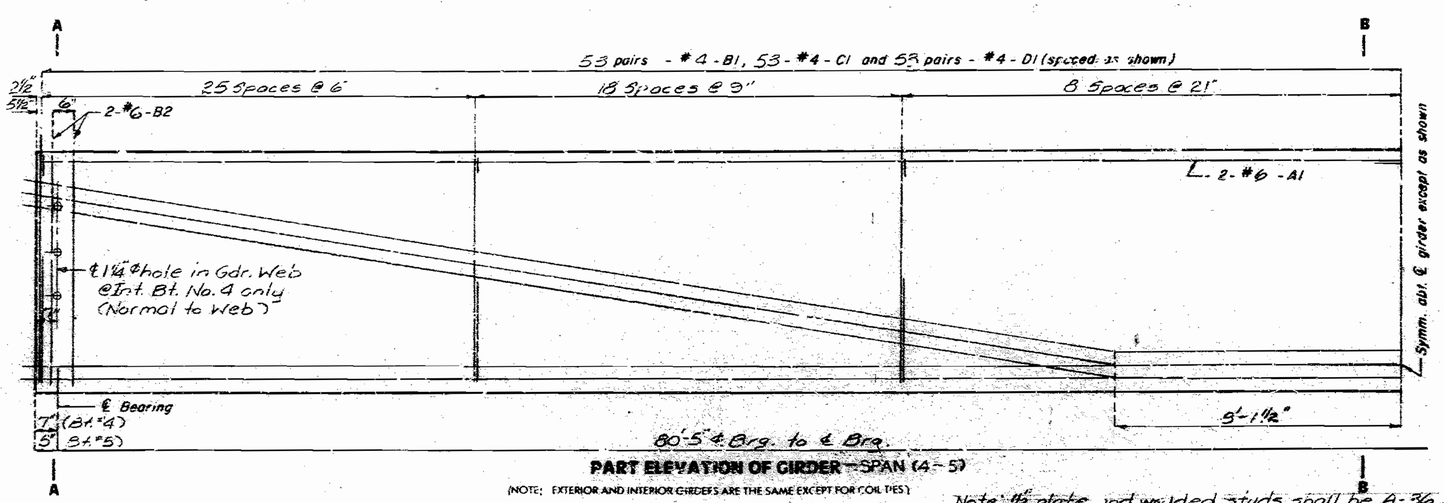

PART ELEVATION OF GIRDER - SPAN (4 - 5)

(NOTE: EXTERIOR AND INTERIOR GIRDERS ARE THE SAME EXCEPT FOR COIL TIES)

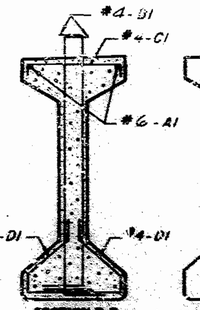

SECTION B-B (STRANDS NOT SHOWN FOR CLARITY)

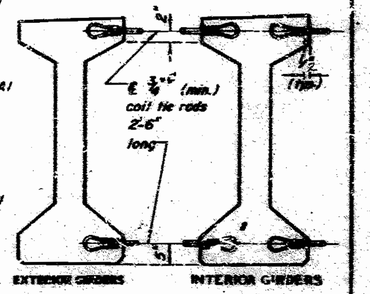

Note: 1½" plate and welded studs shall be A-36 steel. Cost of furnishing, painting and installing 1½" plates and welded studs in girders shall be included in price bid for Prestressed Concrete I-Girders per each.

DETAILS OF COIL TIES
AT INT. BENT NO. 5

NOTE:

COST OF ⅜"ϕ COIL TIE RODS PLACED IN DIAPHRAGMS IS INCLUDED IN CONTRACT UNIT PRICE FOR PRESTRESSED CONCRETE MEMBERS.

COIL TIES SHALL BE HELD IN PLACE IN THE FORMS BY SLOTTED WIRE-SETTING-STUDS PROJECTING THRU FORMS. STUDS ARE TO BE LEFT IN PLACE OR REPLACED WITH TEMPORARY PLUGS UNTIL GIRDERS ARE ERECTED AND THEN REPLUGGED BY COIL TIE RODS.

NOTE:

The 1½"ϕ holes shall be cast in the web for steel intermediate diaphragms. Drilling is not allowed.

For details of Earthquake Restrainers, see sh. No. 14

For details of Elastomeric Expansion Jt. Seal at Int. Bt. #4, see sh. No. 57

For Girder Camber Diagram, see Sh. No. 55

Note: The 1¼"ϕ holes at Int. Bt. No. 4 shall be cast in girder Web. Drilling is not allowed.

For detail of B1 bar permissible alternate shape, see sh. No. 22.

For location of coil ties, see sheets Nos. 37 and 38.

For details of intermediate diaphragms, see sheet Nos. 19 and 20.

For location of coil inserts for slab drains, see sh. No. 62.

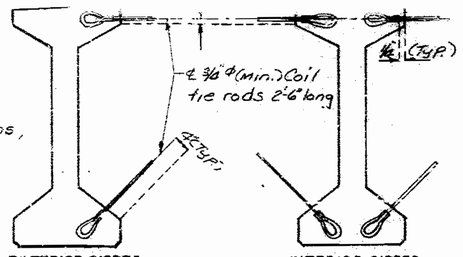

DETAILS OF COIL TIES
AT INT. BENT NO. 4

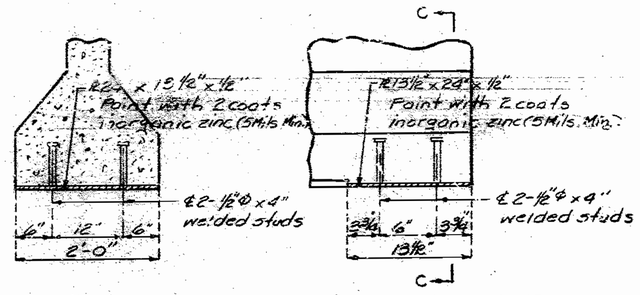

SECTION C-C

PART ELEVATION OF GIRDER AT INT. BENT NO. 4

STATE	PROJ. NO.	SHEET NO.
MO.		32

NOTE:

CONCRETE FOR PRESTRESSED GIRDERS SHALL BE CLASS A1 WITH f'_c = 5,000 PSI.

(+) INDICATES PRESTRESSED STRAND.

USE 26 STRANDS WITH AN INITIAL PRESTRESS FORCE OF 906 KIPS.

PRESTRESSING TENDONS SHALL BE UNCOATED, SEVEN WIRE, LOW RELAXATION STRANDS. - ½ INCH DIAMETER CONFORMING TO A.A.S.H.T.O. M203, GRADE 270. SEE MO. STD. SPECIFICATIONS 705.4.8.

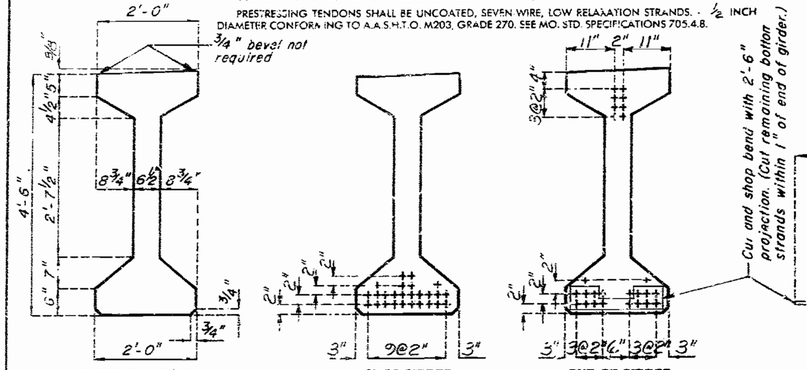

GIRDER DIMENSIONS — CL OF GIRDER — END OF GIRDER

STRAND ARRANGEMENTS

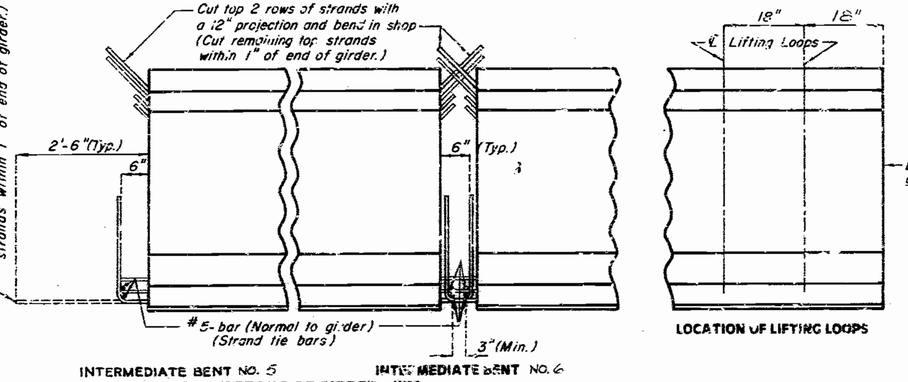

STRAND DETAILS AT GIRDER ENDS

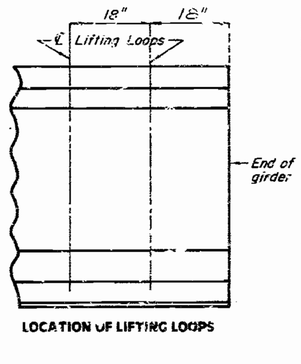

LOCATION OF LIFTING LOOPS

BILL OF REINFORCING STEEL - EACH GIRDER

NO.	SIZE & MARK	ACTUAL LENGTH	SHAPE	BENDING DIAGRAMS
4	6A1	"K"	20	
"L"	4B1	5'-11"	11	
8	6B2	5'-4"	11	
"M"	4C1	2'-2"	10	
"L"	4D1	3'-0"	9	

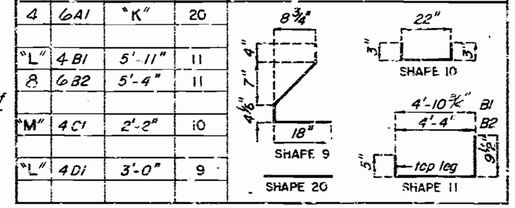

NOTE:

ALL DIMENSIONS IN BENDING DIAGRAMS ARE OUT TO OUT.

HOOKS AND BENDS SHALL BE IN ACCORDANCE WITH THE CRSI MANUAL OF STANDARD PRACTICE FOR DETAILING REINFORCED CONCRETE STRUCTURES STIRRUP AND TIE DIMENSIONS.

ACTUAL LENGTHS ARE MEASURED ALONG CENTERLINE BAR TO THE NEAREST INCH.

MINIMUM CLEARANCE TO REINFORCING SHALL BE 1".

ALL REINFORCEMENT SHALL BE GRADE 60.

THE TWO D1 BARS MAY BE FURNISHED AS ONE BAR AT THE FABRICATOR'S OPTION.

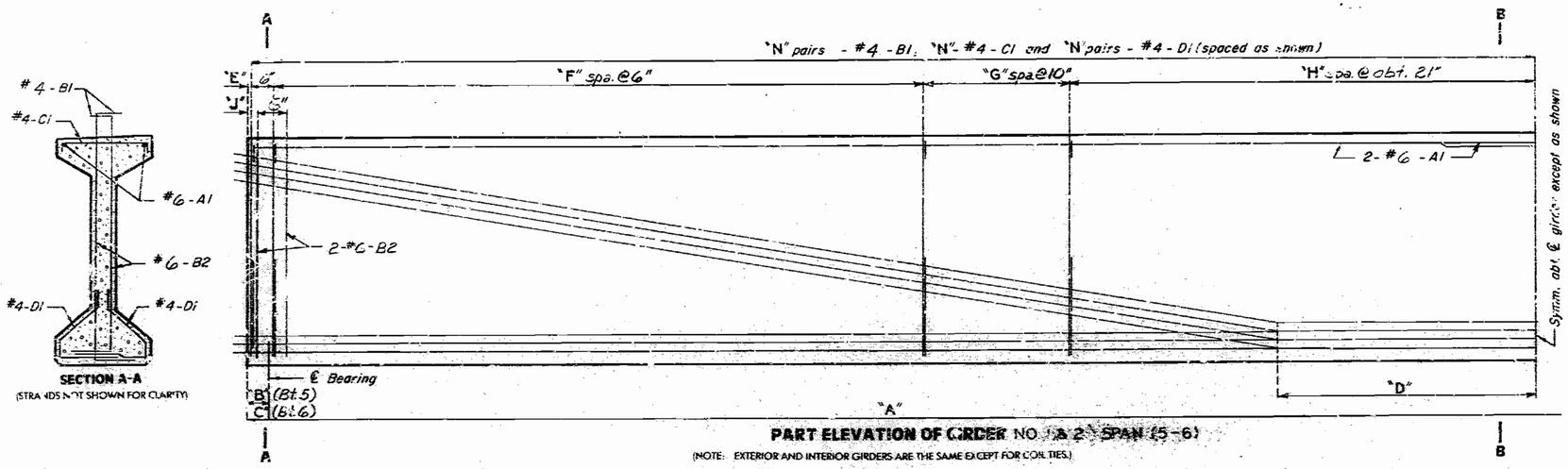

SECTION A-A
(STRANDS NOT SHOWN FOR CLARITY)

PART ELEVATION OF GIRDER NO. 1 & 2 SPAN (5-6)
(NOTE: EXTERIOR AND INTERIOR GIRDERS ARE THE SAME EXCEPT FOR COIL TIES.)

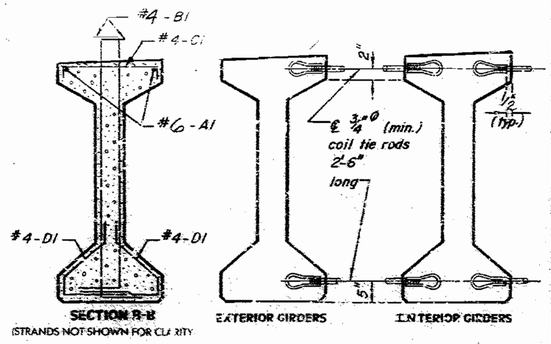

SECTION B-B
(STRANDS NOT SHOWN FOR CLARITY)

EXTERIOR GIRDERS — INTERIOR GIRDERS

DETAILS OF COIL TIES

Note: For detail of B1 bar permissible alternate shape, see sh. No. 22.

TABLE OF DIMENSIONS

GIRDER NO.	"A"	"B"	"C"	"D"	"E"	"F"	"G"	"H"	"J"	"K"	"L"	"M"	"N"
1	37'-6⅜"	5⅜"	5⅜"	8'-10"	3"	34	11	10	6"	45'-3"	226	113	57
2	34'-3⅜"	5⅜"	5⅜"	8'-6"	3"	33	10	10	6"	43'-6"	218	109	55

NOTE:

COST OF ¾"ø COIL TIE RODS PLACED IN DIAPHRAGMS IS INCLUDED IN CONTRACT UNIT PRICE FOR PRESTRESSED CONCRETE MEMBERS.

COIL TIES SHALL BE HELD IN PLACE IN THE FORMS BY SLOTTED WIRE-SETTING-STUDS PROJECTING THRU FORMS. STUDS ARE TO BE LEFT IN PLACE OR REPLACED WITH TEMPORARY PLUGS UNTIL GIRDERS ARE ERECTED AND THEN REPLACED BY COIL TIE RODS.

NOTE:

The 1½"ø holes shall be cast in the web for steel intermediate diaphragms. Drilling is not allowed.

For Girder Camber Diagram, see sh. No. 55

For location of coil ties, see sh. No. 37

For details of intermediate diaphragms, see sheet Nos. 19 and 20.

For location of coil inserts for slab drains, see sh. No. 62

SPS 55.6.6/2 — REVISED JUNE 1987
FEB. 1974

DETAILED APRIL 1988
CHECKED July 1989

Note: This drawing is not to scale. Follow dimensions.

JACKSON COUNTY A-2733

STATE	PROJ. NO	SHEET NO
MO		33

NOTE:

CONCRETE FOR PRESTRESSED GIRDERS SHALL BE CLASS A1 WITH f'_c = 5,000 PSI.

"H" INDICATES PRESTRESSED STRAND.

USE 22 STRANDS WITH AN INITIAL PRESTRESS FORCE OF 652 KIPS.

PRESTRESSING TENDONS SHALL BE UNCOATED, SEVEN-WIRE, LOW RELAXATION STRANDS. - ½ INCH DIAMETER CONFORMING TO A.A.S.H.T.O. M203, GRADE 270. SEE MO. STD. SPECIFICATIONS 705.4.8.

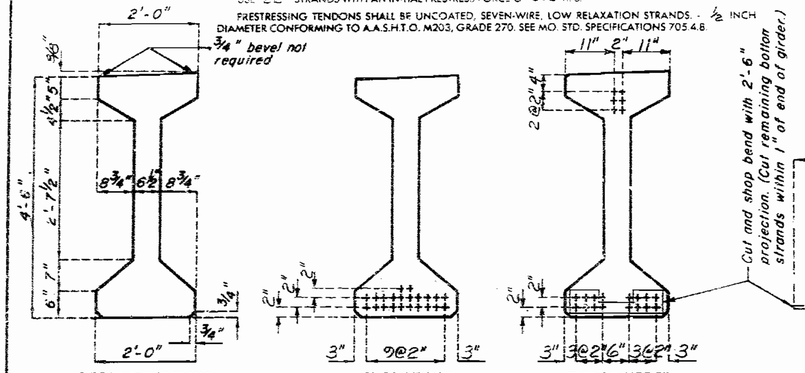

GIRDER DIMENSIONS — CL OF GIRDER — END OF GIRDER

STRAND ARRANGEMENTS

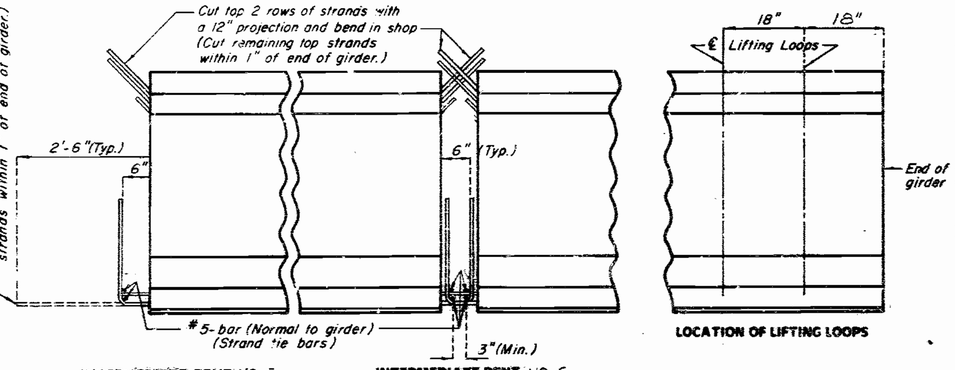

INTERMEDIATE BENT NO. 5 — INTERMEDIATE BENT NO. 6

STRAND DETAILS AT GIRDER ENDS

LOCATION OF LIFTING LOOPS

BILL OF REINFORCING STEEL - EACH GIRDER

NO.	SIZE & MARK	ACTUAL LENGTH	SHAPE	BENDING DIAGRAMS
4	6A1	"K"	20	
"L"	4 B1	5'-11"	11	
8	6 B2	5'-4"	11	
"M"	4 C1	2'-2"	10	
"L"	4 D1	3'-0"	9	

SHAPE 10 — SHAPE 9 — SHAPE 20 — SHAPE 11

NOTE:

ALL DIMENSIONS IN BENDING DIAGRAM ARE OUT TO OUT.

HOOKS AND BENDS SHALL BE IN ACCORDANCE WITH THE CRSI MANUAL OF STANDARD PRACTICE FOR DETAILING REINFORCED CONCRETE STRUCTURES STIRRUP AND TIE DIMENSIONS.

ACTUAL LENGTHS ARE MEASURED ALONG CENTERLINE BAR TO THE NEAREST INCH.

MINIMUM CLEARANCE TO REINFORCING SHALL BE 1".

ALL REINFORCEMENT SHALL BE GRADE 60.

THE TWO D1 BARS MAY BE FURNISHED AS ONE BAR AT THE FABRICATOR'S OPTION.

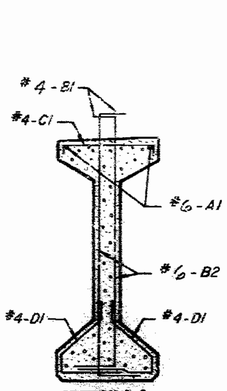

SECTION A-A
(STRANDS NOT SHOWN FOR CLARITY)

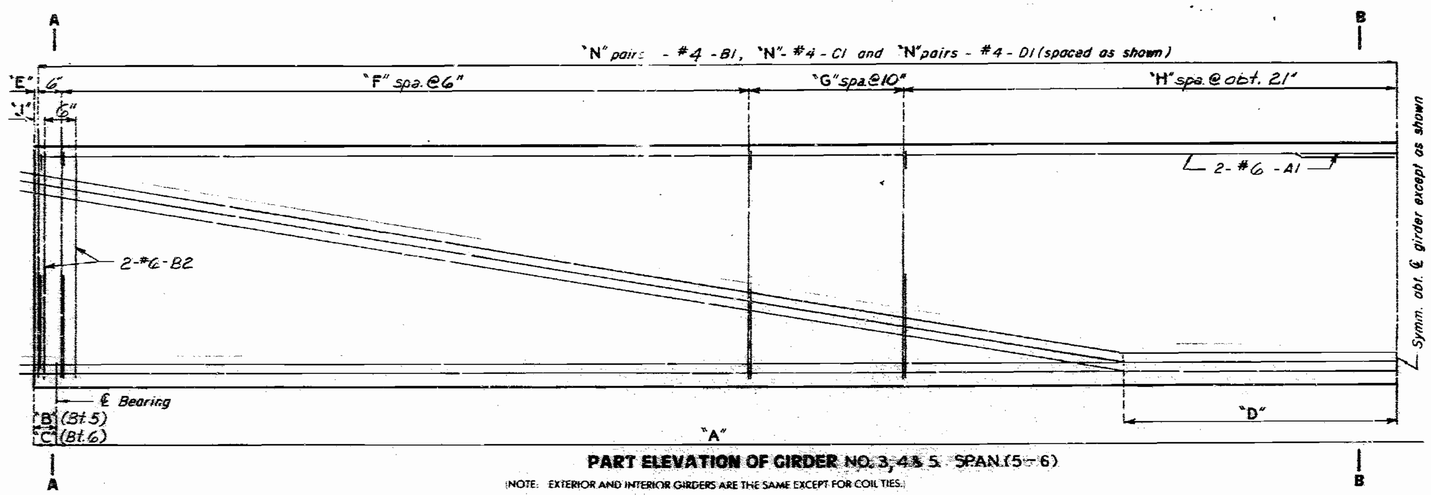

PART ELEVATION OF GIRDER NO. 3, 4 & 5 SPAN (5 - 6)

(NOTE: EXTERIOR AND INTERIOR GIRDERS ARE THE SAME EXCEPT FOR COIL TIES.)

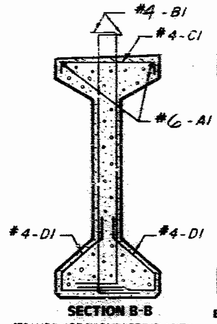

SECTION B-B
(STRANDS NOT SHOWN FOR CLARITY)

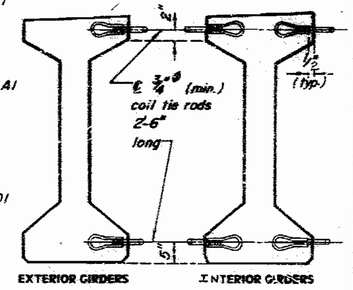

EXTERIOR GIRDERS — INTERIOR GIRDERS

DETAILS OF COIL TIES

Note: For detail of B1 bar permissible alternate shape, see sh. No. 22.

TABLE OF DIMENSIONS

GIRDER NO.	"A"	"B"	"C"	"D"	"E"	"F"	"G"	"H"	"J"	"K"	"L"	"M"	"N"
3	81'-1¼	5¾	6"	8'-2½"	3"	33	10	9	6"	41'-11"	214	107	54
4	77'-10⅝	5⅝	5¾	7'-10½"	3"	31	9	9	6"	40'-4"	202	101	51
5	74'-8"	5½	5½	7'-6½"	3"	30	10	8	6"	38'-8"	198	99	50

NOTE:

COST OF 3/4"ø COIL TIE RODS PLACED IN DIAPHRAGMS IS INCLUDED IN CONTRACT UNIT PRICE FOR PRESTRESSED CONCRETE MEMBERS.

COIL TIES SHALL BE HELD IN PLACE IN THE FORMS BY SLOTTED WIRE-SETTING-STUDS PROJECTING THRU FORMS. STUDS ARE TO BE LEFT IN PLACE OR REPLACED WITH TEMPORARY PLUGS UNTIL GIRDERS ARE ERECTED AND THEN REPLACED BY COIL TIE RODS.

NOTE:

The 1½"ø holes shall be cast in the web for steel intermediate diaphragms. Drilling is not allowed.

For Girder Camber Diagram, see sh. No. 55

For location of coil ties, see sh. No. 37.

For details of intermediate diaphragms, see sheet Nos. 19 and 20.

FEB. 1974 | JUNE 1987

DETAILED APRIL 1988
CHECKED July 1989

Note: This drawing is not to scale. Follow dimensions.

JACKSON COUNTY

A-2733

STATE	PROJ NO	SHEET NO
MO		34

NOTE:

CONCRETE FOR PRESTRESSED GIRDERS SHALL BE CLASS A1 WITH f'_c = 5,000 PSI.

(+) INDICATES PRESTRESSED STRAND.

USE 22 STRANDS WITH AN INITIAL PRESTRESS FORCE OF 652 IPS.

PRESTRESSING TENDONS SHALL BE UNCOATED, SEVEN-WIRE, LOW RELAXATION STRANDS. - ½ INCH DIAMETER CONFORMING TO A.A.S.H.T.O. M203, GRADE 270. SEE MO. STD. SPECIFICATIONS 705.4.8.

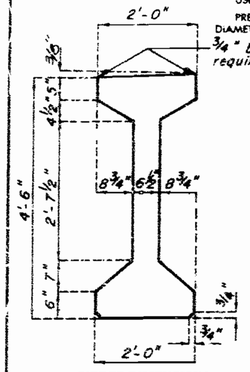

GIRDER DIMENSIONS

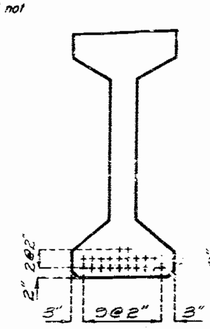

CL OF GIRDER

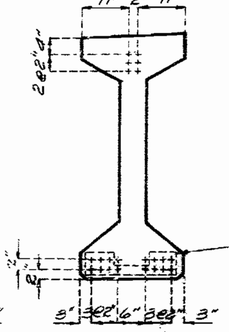

END OF GIRDER

STRAND ARRANGEMENTS

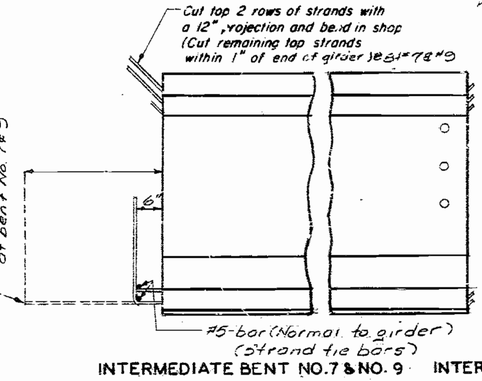

INTERMEDIATE BENT NO.7 & NO. 9 INTERMEDIATE BENT NO.8

STRAND DETAILS AT GIRDER ENDS

Note: Prestressing strands at Int Bt #3 shall be trimmed to within ⅛" of concrete if exposed, or 1" of concrete if encased. Exposed ends of girders shall be given 2 coats of an asphalt paint. Ends of girders which will be encased in concrete diaphragms shall not be painted.

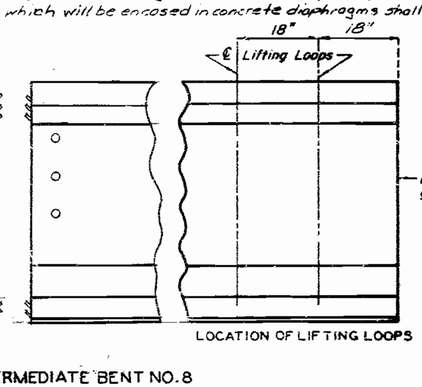

LOCATION OF LIFTING LOOPS

BILL OF REINFORCING STEEL - EACH GIRDER

NO.	SIZE & MARK	ACTUAL LENGTH	SHAPE	BENDING DIAGRAMS
4	6 A1	41'-4"	20	
206	4 B1	5'-11"	11	
8	6 B2	5'-4"	11	
103	4 C1	2'-2"	10	
206	4 D1	3'-0"	9	

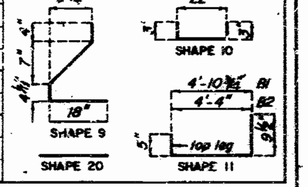

NOTE:

ALL DIMENSIONS IN BENDING DIAGRAM ARE OUT TO OUT.

HOOKS AND BENDS SHALL BE IN ACCORDANCE WITH THE CRSI MANUAL OF STANDARD PRACTICE FOR DETAILING REINFORCED CONCRETE STRUCTURES STIRRUP AND TIE DIMENSIONS.

ACTUAL LENGTHS ARE MEASURED ALONG CENTERLINE BAR TO THE NEAREST INCH.

MINIMUM CLEARANCE TO REINFORCING SHALL BE 1".

ALL REINFORCEMENT SHALL BE GRADE 60.

THE TWO D1 BARS MAY BE FURNISHED AS ONE BAR AT THE FABRICATOR'S OPTION.

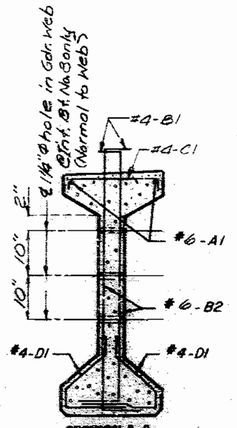

SECTION A-A
(STRANDS NOT SHOWN FOR CLARITY)

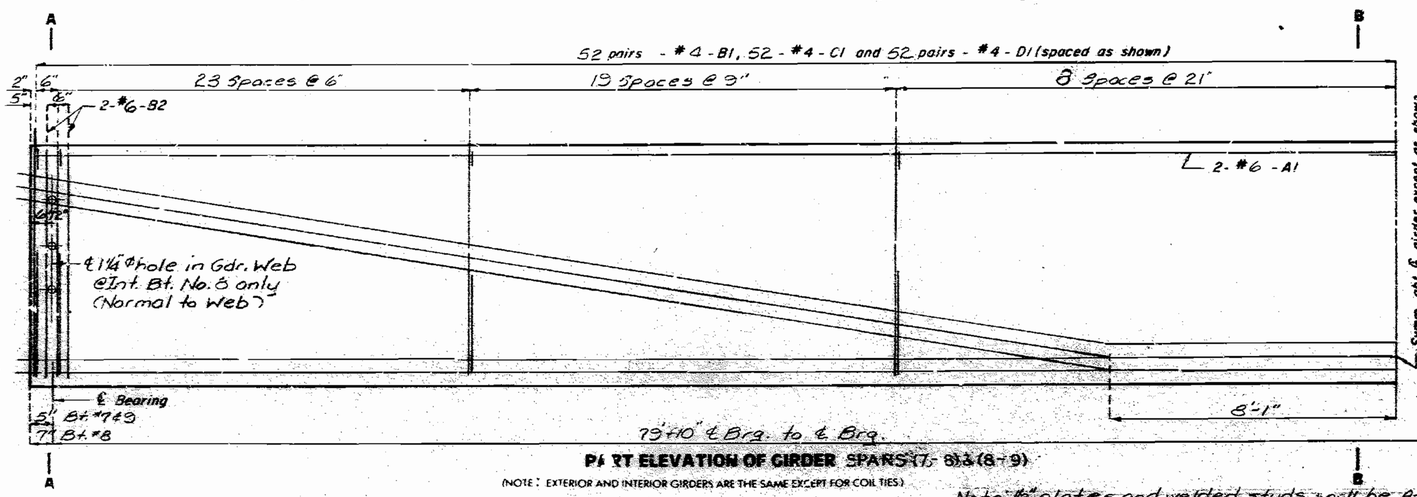

PART ELEVATION OF GIRDER SPANS (7-8) & (8-9)

(NOTE: EXTERIOR AND INTERIOR GIRDERS ARE THE SAME EXCEPT FOR COIL TIES.)

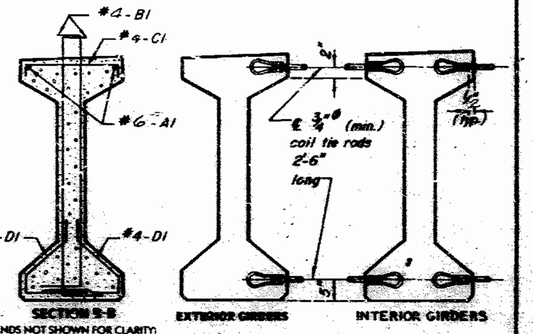

DETAILS OF COIL TIES
AT INT. BENT NO. 7 & 9

NOTE:

COST OF ¾"ø COIL TIE RODS PLACED IN DIAPHRAGMS IS INCLUDED IN CONTRACT UNIT PRICE FOR PRESTRESSED CONCRETE MEMBERS.

COIL TIES SHALL BE HELD IN PLACE IN THE FORMS BY SLOTTED WIRE-SETTING STUDS PROJECTING THRU FORMS. STUDS ARE TO BE LEFT IN PLACE OR REPLACED WITH TEMPORARY PLUGS UNTIL GIRDERS ARE ERECTED AND THEN REPLACED BY COIL TIE RODS.

Note: 1½" plates and welded studs shall be A-36 steel. Cost of furnishing, painting and installing 1½" plates and welded studs in girders shall be included in price bid for Prestressed Concrete I-Girders, per each.

Note: The 1¼"ø holes at Int. Bt. No. 8 shall be cast in girder web. Drilling is not allowed.

Note: For detail of B1 bar permissible alternate shape, see Sh. No. 22.
For location of coil tie, see sheet Nos. 37 and 38.
For details of intermediate diaphragms, see sheet Nos. 19 and 20.
For location of coil inserts for slab drains, see Sh. No. 62

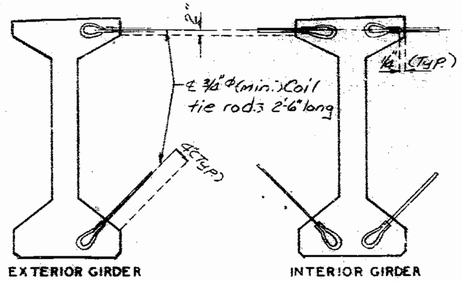

EXTERIOR GIRDER INTERIOR GIRDER

DETAILS OF COIL TIES
AT INT. BENT NO. 8

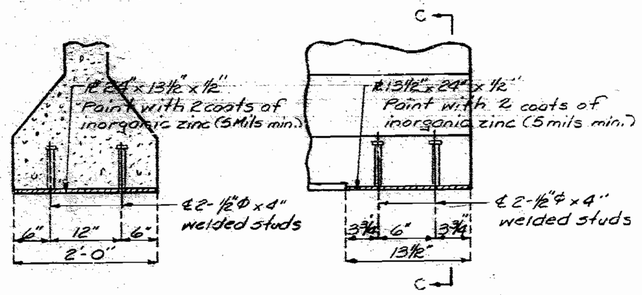

SECTION C-C

PART ELEVATION OF GIRDER AT INT. BENT NO. 8

NOTE:

The 1½"ø holes shall be cast in the web for steel intermediate diaphragms. Drilling is not allowed.

For details of Earthquake Restrainers, see Sh. No. 14

For details of Elastomeric Expansion Jt. Seal at Int. Bt. 8 see Sh. No. 58.

For Girder Camber Diagram, see Sh. No. 55.

NOTE.

CONCRETE FOR PRESTRESSED GIRDERS SHALL BE CLASS A1 WITH f'_c = 5,000 PSI.

[+] INDICATES RESTRESSED STRAND.

USE 14 STRANDS WITH AN INITIAL PRESTRESS FORCE OF 434 KIPS.

PRESTRESSING TENDONS SHALL BE UNCOATED, SEVEN-WIRE, LOW RELAXATION STRANDS. - ½ INCH DIAMETER CONFORMING TO A.A.S.H.T.O. M203, GRADE 270. SEE MO. STD. SPECIFICATIONS 705.4.8.

STATE	PROJ. NO	SHEET NO.
MO		35

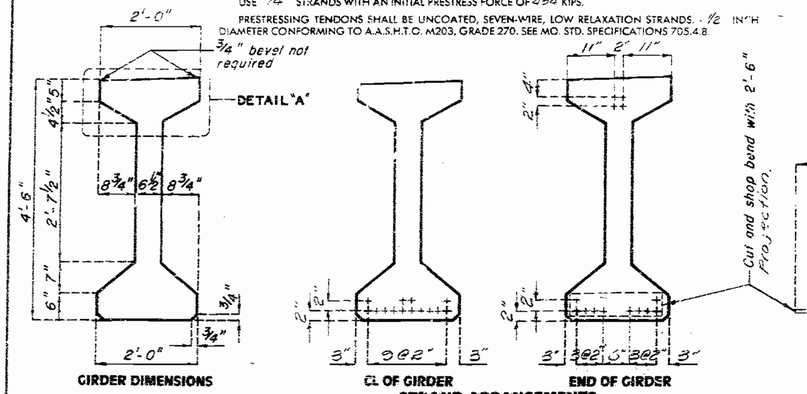

GIRDER DIMENSIONS

CL OF GIRDER END OF GIRDER

STRAND ARRANGEMENTS

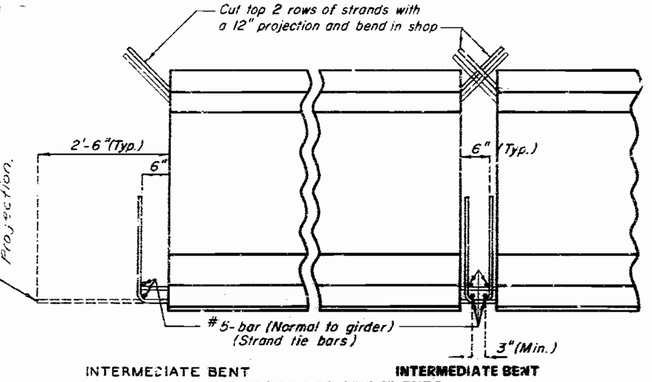

INTERMEDIATE BENT INTERMEDIATE BENT

STRAND DETAILS AT GIRDER ENDS

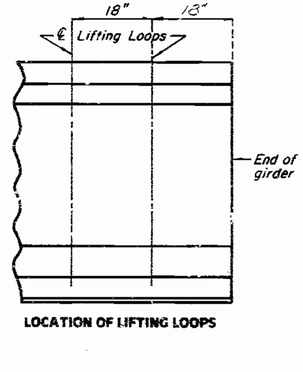

LOCATION OF LIFTING LOOPS

BILL OF REINFORCING STEEL - EACH GIRDER

NO.	SIZE & MARK	ACTUAL LENGTH	SHAPE	BENDING DIAGRAMS
4	6A1	"K"	20	
"L"	4B1	6'-0"	11	
4	6B2	5'-4"	11	
"M"	4C1	2'-2"	10	
"L"	4D1	3'-0"	9	

SHAPE 10 · SHAPE 9 · SHAPE 20 · SHAPE 11

NOTE:

ALL DIMENSIONS IN BENDING DIAGRAM ARE OUT TO OUT.

HOOKS AND BENDS SHALL BE IN ACCORDANCE WITH THE CRSI MANUAL OF STANDARD PRACTICE FOR DETAILING REINFORCED CONCRETE STRUCTURES STIRRUP AND TIE DIMENSIONS.

ACTUAL LENGTHS ARE MEASURED ALONG CENTERLINE BAR TO THE NEAREST INCH.

MINIMUM CLEARANCE TO REINFORCING SHALL BE 1".

ALL REINFORCEMENT SHALL BE GRADE 60.

THE TWO D1 BARS MAY BE FURNISHED AS ONE BAR AT THE FABRICATOR'S OPTION.

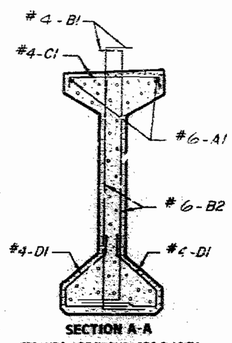

SECTION A-A
(STRANDS NOT SHOWN FOR CLARITY)

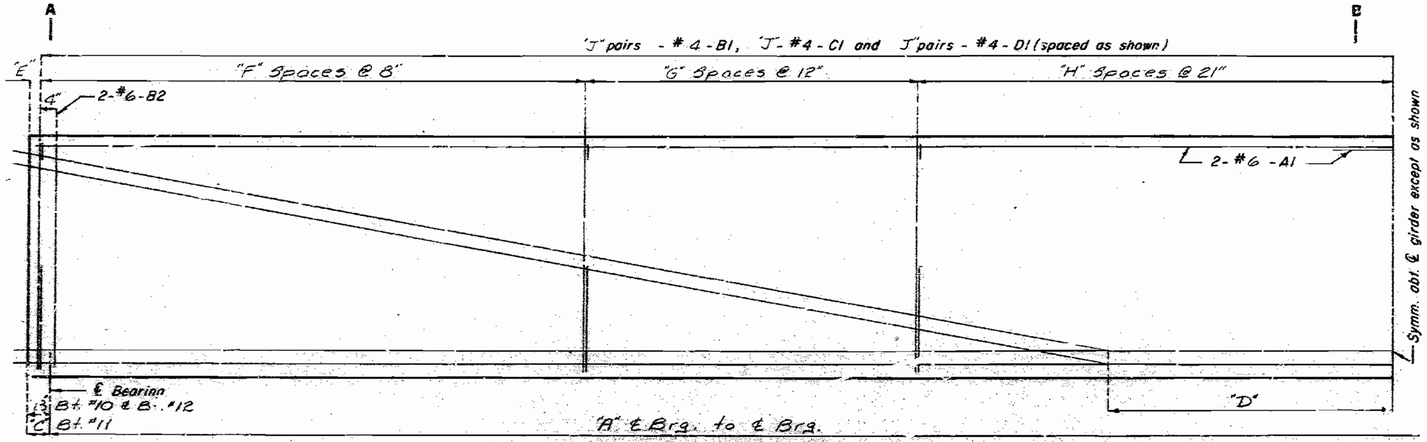

PART ELEVATION OF GIRDER SPAN (10-11) & (11-12)

(NOTE: EXTERIOR AND INTERIOR GIRDERS ARE THE SAME EXCEPT FOR COIL TIES.)

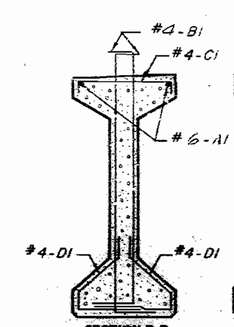

SECTION B-B
(STRANDS NOT SHOWN FOR CLARITY)

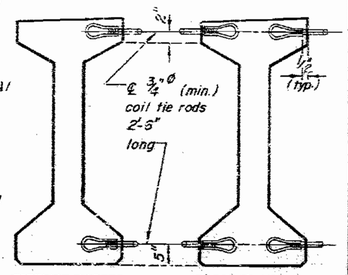

EXTERIOR GIRDERS INTERIOR GIRDERS

DETAILS OF COIL TIES

Note: For detail of B1 bar permissible alternate shape, see Sh. No. 22.

TABLE OF DIMENSIONS - SPAN (10-11)

GIRDER NO.	"A"	"B"	"C"	"D"	"E"	"F"	"G"	"H"	"J"	"K"	"L"	"M"
1	66'-6½"	5½"	7"	6'-9"	2½"	20	8	7	36	34'-8"	142	71
2	64'-3"	5⅛"	5½"	6'-6"	4"	18	8	7	34	33'-6"	134	67
3	61'-11½"	5¼"	5¼"	6'-3"	2"	18	7	7	33	32'-4"	130	65
4	59'-8"	5"	5"	6'-0½"	5"	17	8	6	32	31'-2"	126	63
5	57'-4½"	5¼"	5¼"	5'-9½"	3½"	17	7	6	31	30'-0"	122	61

TABLE OF DIMENSIONS - SPAN (11-12)

GIRDER NO.	"A"	"B"	"C"	"D"	"E"	"F"	"G"	"H"	"J"	"K"	"L"	"M"
1	66'-8⅛"	5⅞"	5"	6'-9"	2½"	20	8	7	36	34'-8"	142	71
2	64'-3⅛"	5⅞"	5"	6'-6"	4"	18	8	7	34	33'-6"	134	67
3	61'-10⅛"	5⅞"	6"	6'-3"	2"	18	7	7	33	32'-4"	130	65
4	59'-5⅛"	6⅛"	6"	6'-0½"	5"	17	8	6	32	31'-2"	126	63
5	57'-0⅛"	5⅞"	6"	5'-9½"	3½"	17	7	6	31	30'-0"	122	61

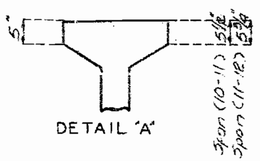

DETAIL "A"

NOTE:

COST OF ¾"Ø COIL TIE RODS PLACED IN DIAPHRAGMS IS INCLUDED IN CONTRACT UNIT PRICE FOR PRESTRESSED CONCRETE MEMBERS.

COIL TIES SHALL BE HELD IN PLACE IN THE FORMS BY SLOTTED WIRE-SETTING-STUDS PROJECTING THRU FORMS. STUDS ARE TO BE LEFT IN PLACE OR REPLACED WITH TEMPORARY PLUGS UNTIL GIRDERS ARE ERECTED AND THEN REPLACED BY COIL TIE RODS.

NOTE:

The 1½"Ø holes shall be cast in the web for steel intermediate diaphragms. *Drilling is not allowed.*

For Girder Camber Diagram, see Sh. No. 55

For location of coil ties, see sheet Nos. 17 and 33

For details of intermediate diaphragms, see sheet Nos. 19 and 21.

SPS 556.6½ FEB. 1974 | REVISED JUNE 1987

DETAILED APRIL 1988

CHECKED July 1989

Note. This drawing is not to scale. Follow dimensions.

JACKSON COUNTY

A-2733

STATE	PROJ. NO	SHEET NO.
MO		36

NOTE:

CONCRETE FOR PRESTRESSED GIRDERS SHALL BE CLASS A1 WITH f'c = 5,000 PSI.

(+) INDICATES PRESTRESSED STRAND.

USE 14 STRANDS WITH AN INITIAL PRESTRESS FORCE OF 434 KIPS.

PRESTRESSING TENDONS SHALL BE UNCOATED, SEVEN-WIRE, LOW RELAXATION STRANDS. - ½ INCH DIAMETER CONFORMING TO A.A.S.H.T.O. M203, GRADE 270. SEE MC. STD. SPECIFICATIONS 705.4.8.

Note: Prestressing strands at Int. Bt. No. 13 shall be trimmed to within 18" inch of concrete if exposed or 1 inch of concrete if encased. Exposed ends of girders shall be given 2 coats of an asphalt paint. Ends of girders which will be encased in concrete diaphrams shall not be painted

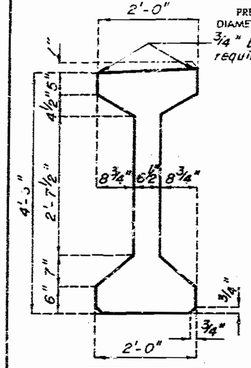

GIRDER DIMENSIONS

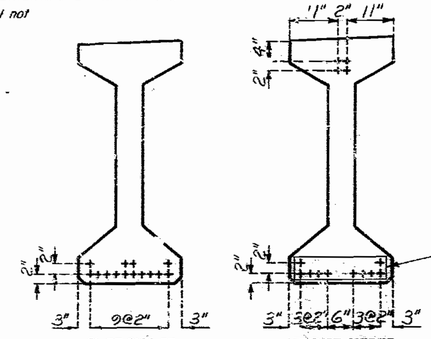

CL OF GIRDER

END OF GIRDER

STRAND ARRANGEMENTS

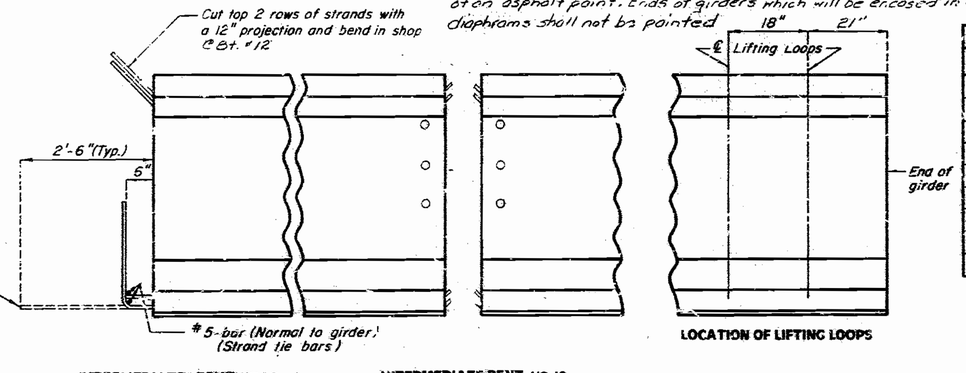

INTERMEDIATE BENT NO. 12

INTERMEDIATE BENT NO. 13

STRAND DETAILS AT GIRDER ENDS

LOCATION OF LIFTING LOOPS

BILL OF REINFORCING STEEL - EACH GIRDER

NO.	SIZE & MARK	ACTUAL LENGTH	SHAPE	BENDING DIAGRAMS
2	6 A1	60'-8"	20	
130	4 B1	6'-0"	11	
4	6 B2	5'-4"	11	
65	4 C1	2'-2"	10	
130	4 D1	3'-0"	9	

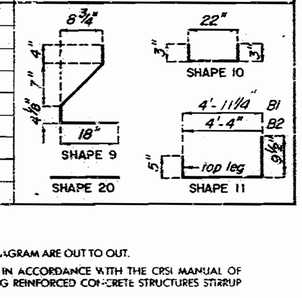

NOTE:

ALL DIMENSIONS IN BENDING DIAGRAM ARE OUT TO OUT.

HOOKS AND BENDS SHALL BE IN ACCORDANCE WITH THE CRSI MANUAL OF STANDARD PRACTICE FOR DETAILING REINFORCED CONCRETE STRUCTURES STIRRUP AND TIE DIMENSIONS.

ACTUAL LENGTHS ARE MEASURED ALONG CENTERLINE BAR TO THE NEAREST INCH.

MINIMUM CLEARANCE TO REINFORCING SHALL BE 1".

ALL REINFORCEMENT SHALL BE GRADE 60.

THE TWO D1 BARS MAY BE FURNISHED AS ONE BAR AT THE FABRICATOR'S OPTION.

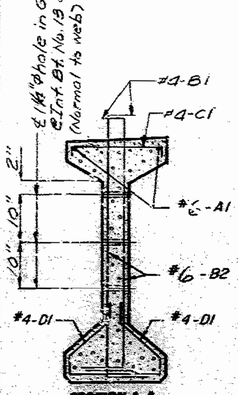

SECTION A-A
(STRANDS NOT SHOWN FOR CLARITY)

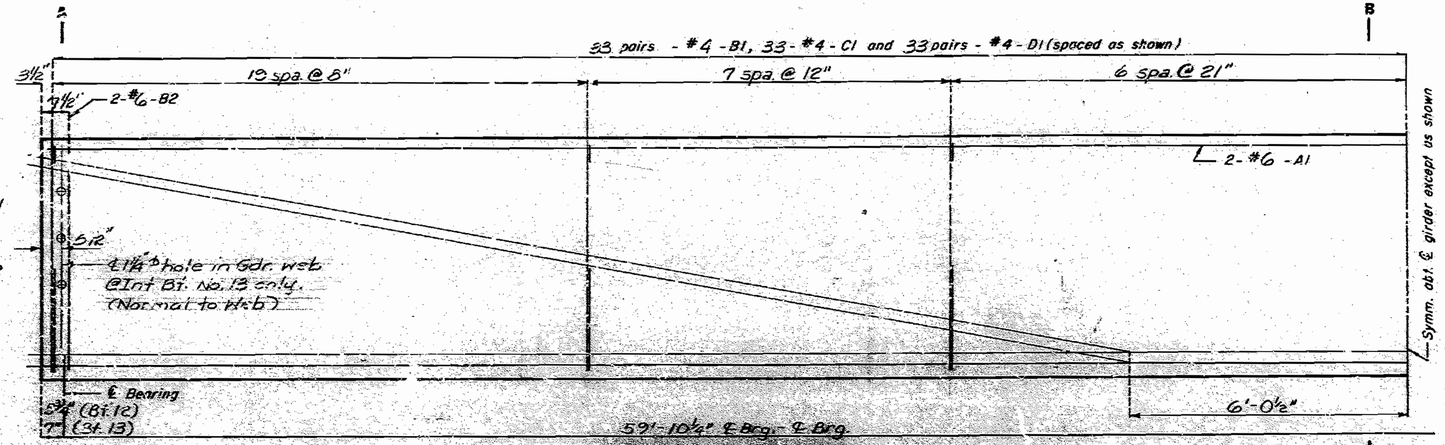

PART ELEVATION OF GIRDER
(NOTE: EXTERIOR AND INTERIOR GIRDERS ARE THE SAME EXCEPT FOR COIL TIES)
SPAN (12 - 13)

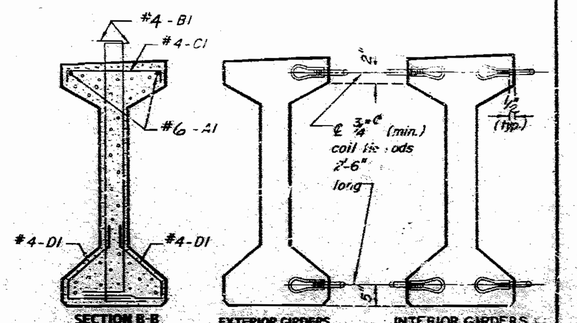

SECTION B-B
(STRANDS NOT SHOWN FOR CLARITY)

EXTERIOR GIRDERS

INTERIOR GIRDERS

Note: For detail of B1 bar permissible alternate shape, see sh. No. 22

Note: The 1¼" ϕ holes at Int. Bt. No. 13 shall be cast in girder web. Drilling is not allowed.

Note: ½" plates and welded studs shall be A-36 steel. Cost of furnishing, painting and installing ½" plates and welded studs in girders shall be included in price bid for Prestressed I-Girder per each.

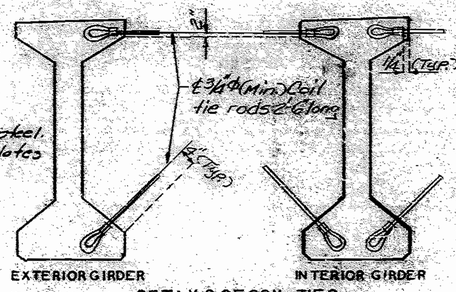

EXTERIOR GIRDER

INTERIOR GIRDER

DETAILS OF COIL TIES
AT INT. BENT NO. 13

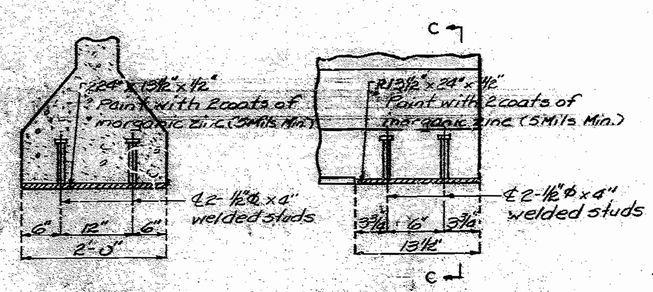

SECTION C-C

PART ELEVATION OF GIRDER AT INT. BENT NO. 13

DETAILS OF COIL TIES
AT INT. BENT NO. 12

NOTE:

COST OF 3/4"ϕ COIL TIE RODS PLACED IN DIAPHRAGMS IS INCLUDED IN CONTRACT UNIT PRICE FOR PRESTRESSED CONCRETE MEMBERS.

COIL TIES SHALL BE HELD IN PLACE IN THE FORMS BY SLOTTED WIRE SETTING STUBS PROJECTING THRU FORMS. STUDS ARE TO BE LEFT IN PLACE OR REPLACED WITH TEMPORARY PLUGS UNTIL GIRDERS ARE ERECTED AND THEN REPLACED BY COIL TIE RODS.

NOTE:

The 1½"ϕ holes shall be cast in the web for steel intermediate diaphragms. Drilling is not allowed.

For details of Earthquake Restrainers, see Sh. No. 14.

For details of Elastomeric Exp. Jt. Seal, see Sh. No. 59.

For Girder Camber Diagram, see Sh. No. 55.

For location of coil ties, see Sheet Nos. 38 and 39.

For details of intermediate diaphragms, see sheets No. 19 and 21.

SPS 55.1.6½ FEB. 1974	REVISED JUNE 1987

DETAILED April 1988
CHECKED July 1989

Note: This drawing is not to scale. Follow dimensions.

JACKSON COUNTY

A-2733

NOTE:

CONCRETE FOR PRESTRESSED GIRDERS SHALL BE CLASS A1 WITH f'c = 5,000 PSI.

(+) INDICATES PRESTRESSED STRAND.

USE 12 STRANDS WITH AN INITIAL PRESTRESS FORCE OF 372 KIPS.

PRESTRESSING TENDONS SHALL BE UNCOATED, SEVEN-WIRE, LOW RELAXATION STRANDS, ½ INCH DIAMETER CONFORMING TO A.A.S.H.T.O. M203, GRADE 270, SEE MO. STD. SPECIFICATIONS 705.4.8.

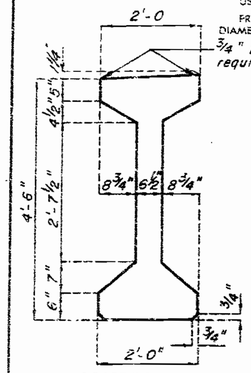

GIRDER DIMENSIONS

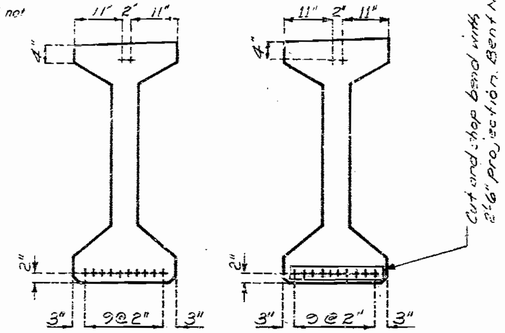

CL OF GIRDER END OF GIRDER

STRAND ARRANGEMENTS

Note: Prestressing strands at Int. Bt. No. 13 shall be trimmed to within ⅛ inch of concrete if exposed or 1 inch of concrete if encased. Exposed ends of girders shall be given 2 coats of an asphalt paint. Ends of girders which will be encased in concrete diaphrams shall not be painted.

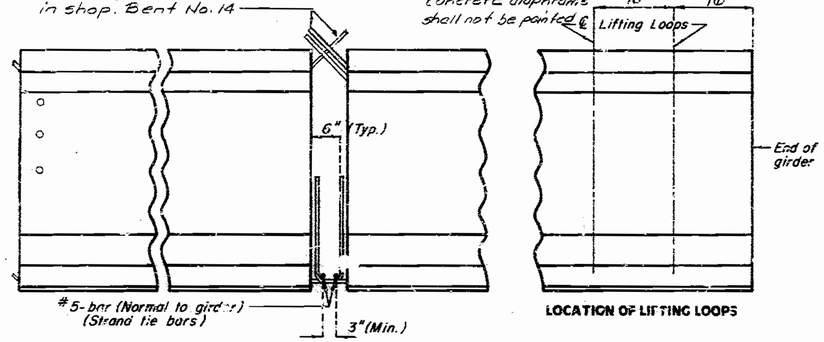

INTERMEDIATE BENT NO 13 INTERMEDIATE BENT NO 14

STRAND DETAILS AT GIRDER ENDS

LOCATION OF LIFTING LOOPS

STATE	PROJ NO	SHEET NO
MO		37

BILL OF REINFORCING STEEL - EACH GIRDER

NO.	SIZE & MARK	ACTUAL LENGTH	SHAPE	BENDING DIAGRAMS
2	#6 A1	46'-6"	20	
34	#4 B1	6'-0"	11	
4	#6 B2	5'-4"	11	
47	#4 C1	2'-2"	10	
34	#4 D1	3'-0"	9	

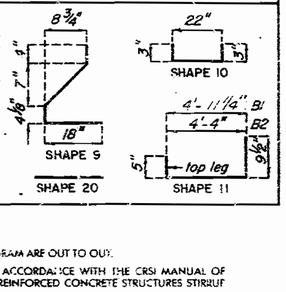

NOTE:

ALL DIMENSIONS IN BENDING DIAGRAM ARE OUT TO OUT.

HOOKS AND BENDS SHALL BE IN ACCORDANCE WITH THE CRSI MANUAL OF STANDARD PRACTICE FOR DETAILING REINFORCED CONCRETE STRUCTURES STIRRUP AND TIE DIMENSIONS.

ACTUAL LENGTH: ARE MEASURED ALONG CENTERLINE BAR TO THE NEAREST INCH.

MINIMUM CLEARANCE TO REINFORCING SHALL BE 1".

ALL REINFORCEMENT SHALL BE GRADE 60.

THE TWO D1 BARS MAY BE FURNISHED AS ONE BAR AT THE FABRICATOR'S OPTION.

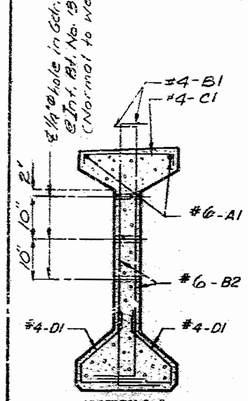

SECTION A-A

(STRANDS NOT SHOWN FOR CLARITY)

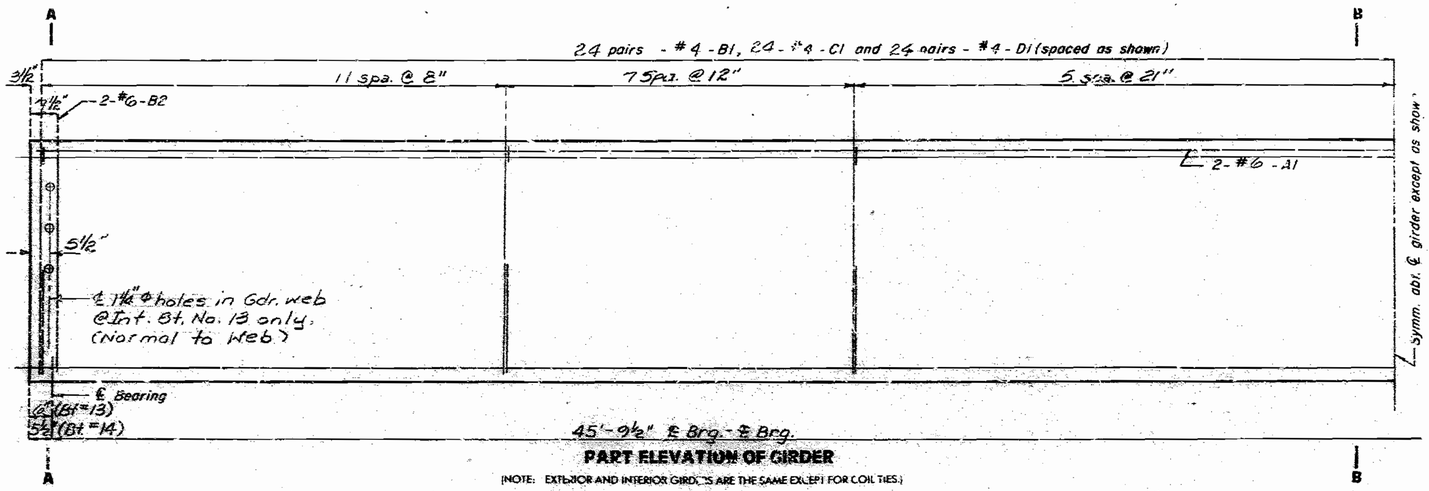

PART ELEVATION OF GIRDER

(NOTE: EXTERIOR AND INTERIOR GIRDERS ARE THE SAME EXCEPT FOR COIL TIES.)

SPAN (13-14)

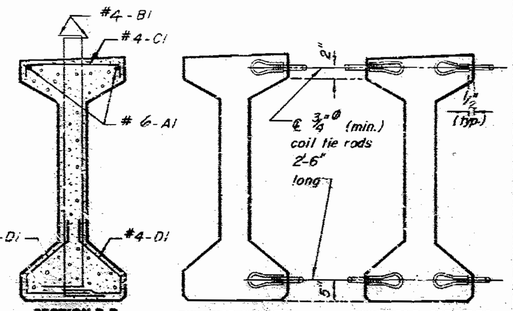

SECTION B-B

(STRANDS NOT SHOWN FOR CLARITY)

EXTERIOR GIRDERS INTERIOR GIRDERS

Note: The 1¼"Ø holes at Int. Bt. No. 13 shall be cast in girder web. Drilling is not allowed.

For detail of B1 bar permissible alternate shape, see Sh. No. 22.

Note: ½" plates and welded studs shall be A-36 steel. Cost of furnishing, painting and installing ½" plates and welded studs in girders shall be included in price bid for Prestressed I-Girder per each.

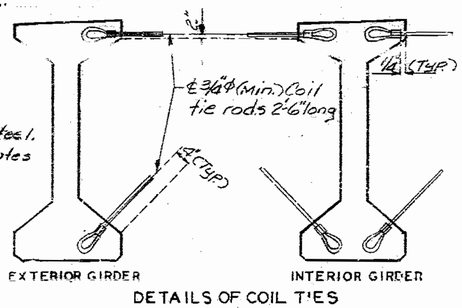

DETAILS OF COIL TIES AT INT. BT. NO. 13

Note: For location of coil ties, see sheets Nos. 38 and 39.

For details of intermediate diaphragms, see sheet Nos. 19 and 21.

For location of coil inserts for slab drains, see Sh. No. 62.

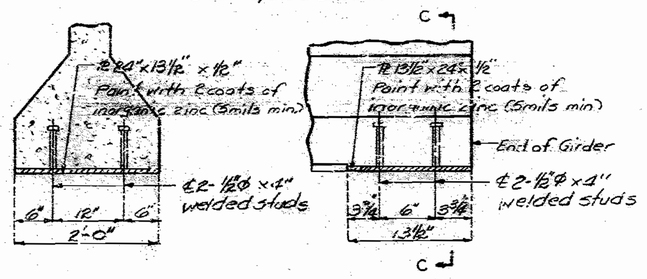

SECTION C-C

PART ELEVATION OF GIRDER AT INT. BENT NO. 13

DETAILS OF COIL TIES
AT INT BENT NO. 14

NOTE:

COST OF 3/4"Ø COIL TIE RODS PLACED IN DIAPHRAGMS IS INCLUDED IN CONTRACT UNIT PRICE FOR PRESTRESSED CONCRETE MEMBERS.

COIL TIES SHALL BE HELD IN PLACE IN THE FORMS BY SLOTTED WIRE-SETTING-STUDS PROJECTING THRU FORMS. STUDS ARE TO BE LEFT IN PLACE OR REPLACED WITH TEMPORARY PLUGS UNTIL GIRDERS ARE ERECTED AND THEN REPLACED BY COIL TIE RODS.

NOTE:

The 1½"Ø holes shall be cast in the web for steel diaphragms. Drilling is not allowed.

For details of Earthquake restrainers, see sh. No. 14

For details of Elastomeric Exp. Jt. seal at Int. Bt. No. 13, see sh. No. 59.

For Girder Camber Diagram, see sh. No. 55

SPS 55.6.6½	REVISED	JUNE 1987
FEB. 1974		

DETAILED April 1989

CHECKED July 1989

STATE	PROJ. NO.	SHEET NO.
MO.		38

NOTE:

CONCRETE FOR PRESTRESSED GIRDERS SHALL BE CLASS A1 WITH f'_c = 5,000 PSI.

(+) INDICATES PRESTRESSED STRAND.

USE 24 STRANDS WITH AN INITIAL PRESTRESS FORCE OF 744 KIPS.

PRESTRESSING TENDONS SHALL BE UNCOATED, SEVEN-WIRE, LOW RELAXATION STRANDS. - ½ INCH DIAMETER CONFORMING TO A.A.S.H.T.O. M203 GRADE 270. SEE MO. STD. SPECIFICATIONS 705.4.8.

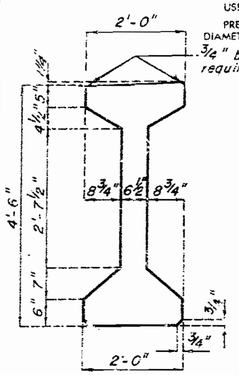

GIRDER DIMENSIONS

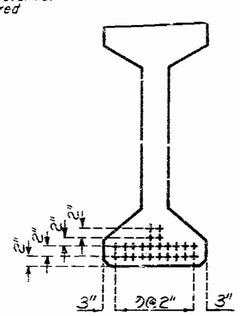

CL OF GIRDER

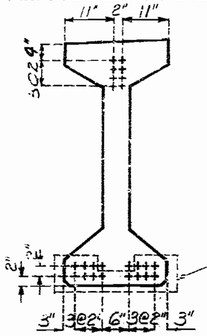

END OF GIRDER

STRAND ARRANGEMENTS

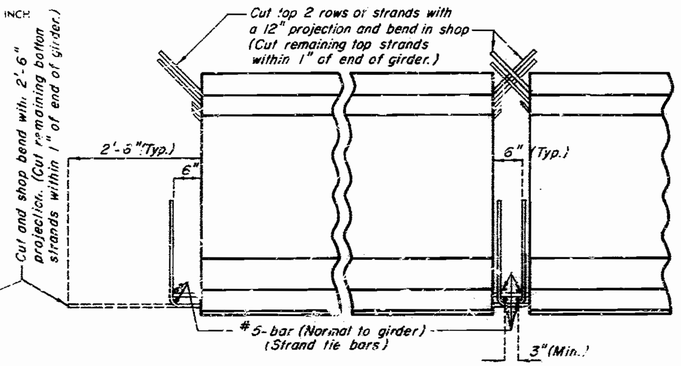

INTERMEDIATE BENT — INTERMEDIATE BENT

STRAND DETAILS AT GIRDER ENDS

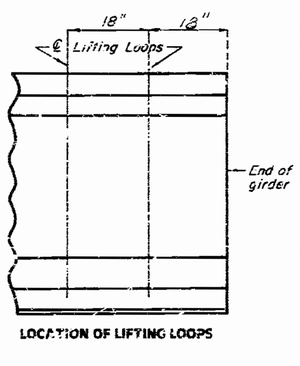

LOCATION OF LIFTING LOOPS

BILL OF REINFORCING STEEL - EACH GIRDER

NO.	SIZE & MARK	ACTUAL LENGTH	SHAPE	BENDING DIAGRAMS
4	6 A1	44'-5"	20	
222	4 B1	6'-0"	11	
8	6 B2	5'-4"	11	
111	4 C1	2'-2"	10	
222	4 D1	3'-0"	9	

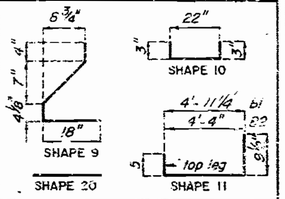

NOTE:

ALL DIMENSIONS IN BENDING DIAGRAM ARE OUT TO OUT.

HOOKS AND BENDS SHALL BE IN ACCORDANCE WITH THE CRSI MANUAL OF STANDARD PRACTICE FOR DETAILING REINFORCED CONCRETE STRUCTURES STIRRUP AND TIE DIMENSIONS.

ACTUAL LENGTHS ARE MEASURED ALONG CENTERLINE BAR TO THE NEAREST INCH.

MINIMUM CLEARANCE TO REINFORCING SHALL BE 1".

ALL REINFORCEMENT SHALL BE GRADE 60.

THE TWO D1 BARS MAY BE FURNISHED AS ONE BAR AT THE FABRICATOR'S OPTION.

SECTION A-A
(STRANDS NOT SHOWN FOR CLARITY)

PART ELEVATION OF GIRDER

(NOTE: EXTERIOR AND INTERIOR GIRDERS ARE THE SAME EXCEPT FOR COIL TIES.)

SPAN (14-15)

SECTION B-B
(STRANDS NOT SHOWN FOR CLARITY)

EXTERIOR GIRDERS — INTERIOR GIRDERS

DETAILS OF COIL TIES

Note: For detail of B1 bar permissible alternate shape, see Sh. No. 22.

NOTE:

COST OF 3/4"ø COIL TIE RODS PLACED IN DIAPHRAGMS IS INCLUDED IN CONTRACT UNIT PRICE FOR PRESTRESSED CONCRETE MEMBERS.

COIL TIES SHALL BE HELD IN PLACE IN THE FORMS BY SLOTTED WIRE-SETTING-STUDS PROJECTING THRU FORMS. STUDS ARE TO BE LEFT IN PLACE OR REPLACED WITH TEMPORARY PLUGS UNTIL GIRDERS ARE ERECTED AND THEN REPLACED BY COIL TIE RODS.

NOTE:

The 1½"ø holes shall be cast in the web for steel intermediate diaphragms. Drilling is not allowed.

For Girder Camber Diagram, see Sh. No. 55.

For location of coil ties, see Sh. No. 39.

For details of intermediate diaphragms, see Sheet Nos. 19 and 21.

DETAILED APRIL 1989
CHECKED July 1989

Note: This drawing is not to scale. Follow dimensions.

JACKSON COUNTY

A-2733

NOTE:

CONCRETE FOR PRESTRESSED GIRDERS SHALL BE CLASS A1 WITH f'c = 5,000 PSI.

(+) INDICATES PRESTRESSED STRAND.

USE 14 STRANDS WITH AN INITIAL PRESTRESS FORCE OF 434 KIPS.

PRESTRESSING TENDONS SHALL BE UNCOATED, SEVEN-WIRE, LOW RELAXATION STRANDS. - 1/2 INCH DIAMETER CONFORMING TO A.A.S.H.T.O. M203, GRADE 270. SEE MO. STD. SPECIFICATIONS 705.4.8.

Note: Prestressing strands at int. Bt. #17 shall be trimmed to within 1/8" of concrete if exposed, or 1" of concrete if encased. Exposed ends of girders shall be given 2 coats of an asphalt paint. Ends of girders which will be encased in concrete diaphragms shall not be painted

STATE	PROJ. NO.	SHEET NO.
MO.		39

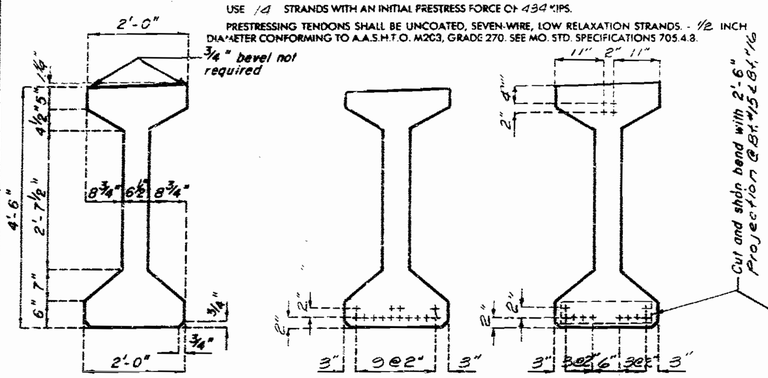

GIRDER DIMENSIONS

CL OF GIRDER

END OF GIRDER

STRAND ARRANGEMENTS

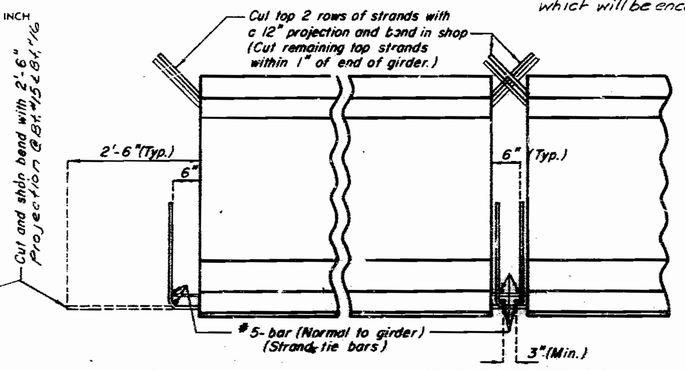

INTERMEDIATE BENT NO.15

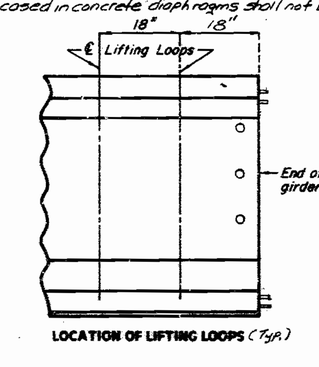

INTERMEDIATE BENT NO.16

LOCATION OF LIFTING LOOPS (Typ.)

INTERMEDIATE BENT NO.17

STRAND DETAILS AT GIRDER ENDS

BILL OF REINFORCING STEEL - EACH GIRDER

NO.	SIZE & MARK	ACTUAL LENGTH	SHAPE	BENDING DIAGRAMS
4	6 A1	"K"	20	
"L"	4 B1	6'-0"	11	
8	5 B2	5'-4"	11	
"M"	4 C1	2'-2"	10	
"L"	4 D1	3'-0"	9	

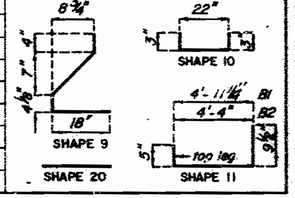

NOTE:

ALL DIMENSIONS IN BENDING DIAGRAM ARE OUT TO OUT.

HOOKS AND BENDS SHALL BE IN ACCORDANCE WITH THE CRSI MANUAL OF STANDARD PRACTICE FOR DETAILING REINFORCED CONCRETE STRUCTURES STIRRUP AND TIE DIMENSIONS.

ACTUAL LENGTHS ARE MEASURED ALONG CENTERLINE BAR TO THE NEAREST INCH.

MINIMUM CLEARANCE TO REINFORCING SHALL BE 1".

ALL REINFORCEMENT SHALL BE GRADE 60.

THE TWO D1 BARS MAY BE FURNISHED AS ONE BAR AT THE FABRICATOR'S OPTION.

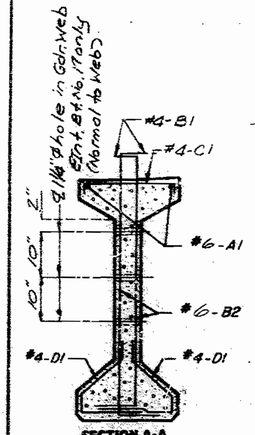

SECTION A-A
(STRANDS NOT SHOWN FOR CLARITY)

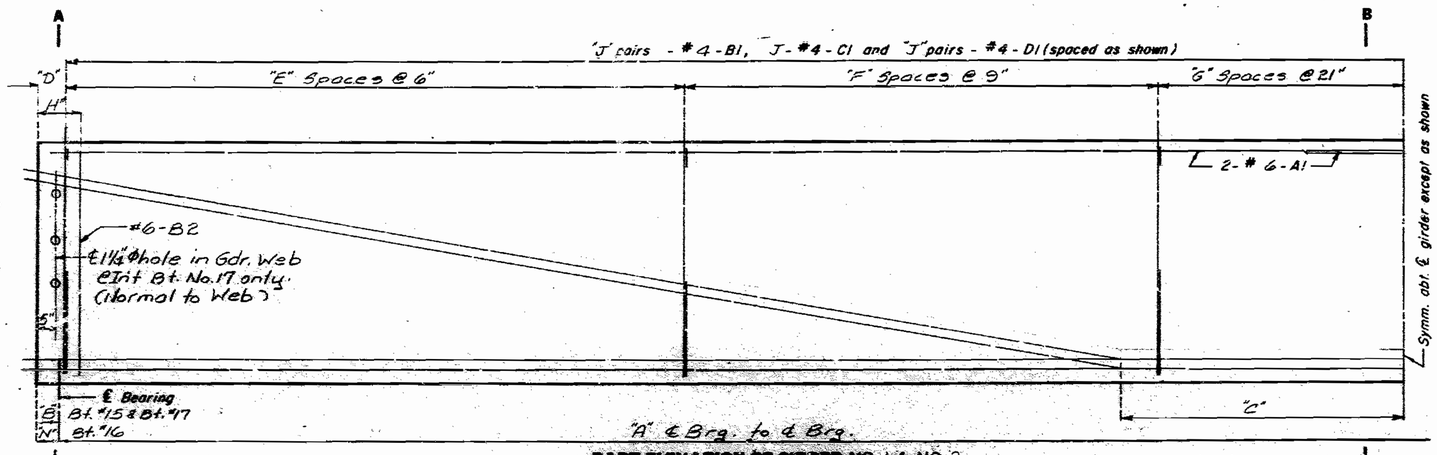

PART ELEVATION OF GIRDER NO. 1 & NO. 2

(NOTE: EXTERIOR AND INTERIOR GIRDERS ARE THE SAME EXCEPT FOR COIL TIES.)

SPANS (15-16) & (16-17)

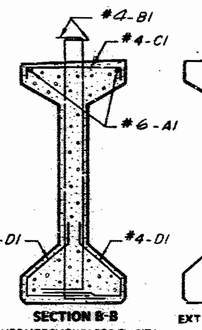

SECTION B-B
(STRANDS NOT SHOWN FOR CLARITY)

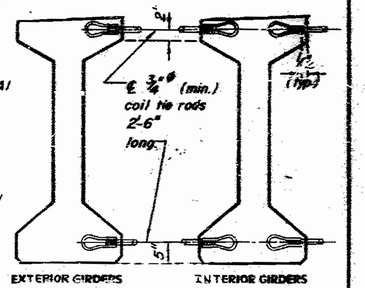

EXTERIOR GIRDERS

INTERIOR GIRDERS

Note: For detail of B1 bar permissible alternate shape, see sh. No. 22.

TABLE OF DIMENSIONS - SPAN (15-16)

GIRDER NO	"A"	"B"	"C"	"D"	"E"	"F"	"G"	"H"	"J"	"K"	"L"	"M"	"N"
1	57'-11 1/8"	8 3/16"	5'-10 1/2"	3 1/2"	18	13	6	6 1/2"	38	30'-5"	150	75	5 1/2"
2	63'-0 1/8"	7 3/16"	6'-4 1/2"	3 1/2"	18	14	7	6 1/2"	40	32'-11"	158	79	5 1/2"

TABLE OF DIMENSIONS - SPAN (16-17)

GIRDER NO	"A"	"B"	"C"	"D"	"E"	"F"	"G"	"H"	"J"	"K"	"L"	"M"	"N"
1	58'-0 1/2"	7 1/2"	5'-10 1/2"	3 1/2"	18	13	6	6 1/2"	38	30'-5"	150	75	5"
2	63'-0 7/8"	7 1/2"	6'-4 1/2"	3 1/2"	18	14	7	6 1/2"	40	32'-11"	158	79	5 1/8"

Note: The 1 1/4" ϕ holes at Int. Bt. No. 17 shall be cast in girder web. Drilling is not allowed.

Note: 1/2" Plates and welded studs shall be A-36 steel. Cost of furnishing, painting and installing 1/2" plates and welded studs in girders shall be included in price bid for Prestressed I-Girder per each.

For location of coil ties, see sheet Nos. 37, 38 and 39.

For details of intermediate diaphragms, see sheet Nos. 19 and 21.

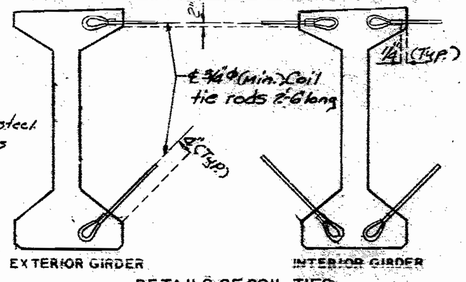

DETAILS OF COIL TIES
AT INT. BENT NO. 17

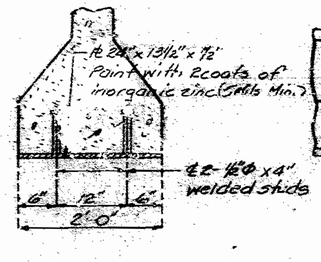

SECT. ON C-C

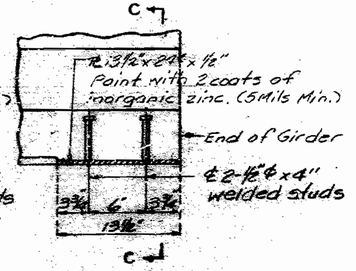

PART ELEVATION OF GIRDER AT INT. BENT NO. 17

DETAILS OF COIL TIES
AT INT. BT NO. 15 & 16

NOTE:

COST OF 3/4" ϕ COIL TIE RODS PLACED IN DIAPHRAGMS IS INCLUDED IN CONTRACT UNIT PRICE FOR PRESTRESSED CONCRETE MEMBERS.

COIL TIES SHALL BE HELD IN PLACE IN THE FORMS BY SLOTTED WIRE SETTING STUDS PROJECTING THRU FORMS. STUDS ARE TO BE LEFT IN PLACE OR REPLACED WITH TEMPORARY PLUGS UNTIL GIRDERS ARE ERECTED AND THEN REPLACED BY COIL TIE RODS.

NOTE:

The 1 1/2" ϕ holes shall be cast in the web for steel intermediate diaphragms. Drilling is not allowed.

For details of Earthquake Restrainers, see sh. No. 15.

For details of Elastomeric Expansion Jt. Seal at Int. Bt. #17, see sh. No. 60.

For Girder Camber Diagram, see sh. No. 55.

For location of coil inserts for slab drains, see sh. No. 62

SPS 55.6.6	REVISED	JUNE 1987
	FEB. 1974	

DETAILED APRIL 1988

CHECKED July 1989

Note: This drawing is not to scale. Follow dimensions.

Sheet No. 39 of 75

JACKSON COUNTY

A-2782

NOTE:

CONCRETE FOR PRESTRESSED GIRDERS SHALL BE CLASS "A" WITH f'_c = 5,000 PSI.

+ INDICATES PRESTRESSED STRAND.

USE 18 STRANDS WITH AN INITIAL PRESTRESS FORCE OF 558 KIPS.

PRESTRESSING TENDONS SHALL BE UNCOATED, SEVEN-WIRE, LOW RELAXATION STRANDS - 1/2 INCH DIAMETER CONFORMING TO A.A.S.H.T.O. M203 GRADE 270 SEE MO. STD. SPECIFICATIONS 705.4.8.

Note: Prestressing strands at int. Bt. #17 shall be trimmed to within 1/8" of concrete if exposed, or 1" of concrete if encased. Exposed ends of girders shall be given 2 coats of an asphalt paint. Ends of girders which will be encased in concrete diaphragms shall not be painted

STATE	PROJ. NO	SHEET NO
MO		10

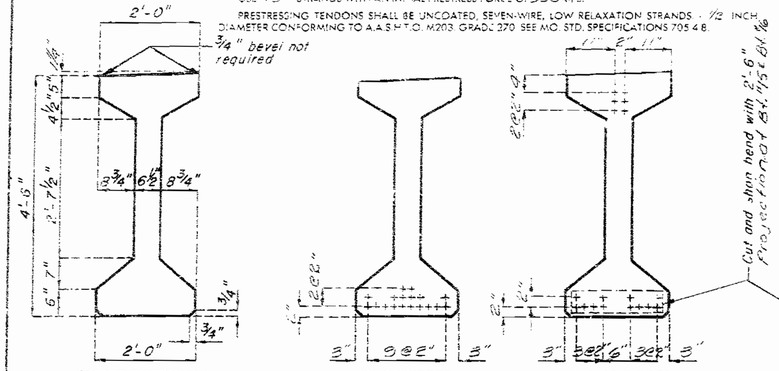

GIRDER DIMENSIONS

CL OF GIRDER END OF GIRDER

STRAND ARRANGEMENTS

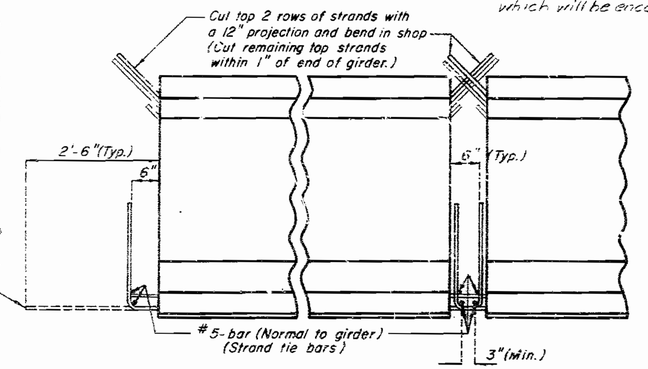

INTERMEDIATE BENT NO.15 — INTERMEDIATE BENT NO.16

STRAND DETAILS AT GIRDER ENDS

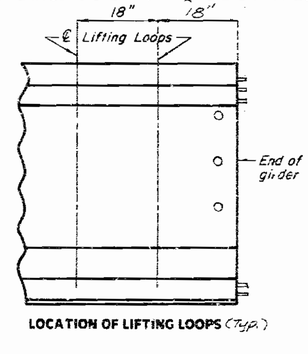

LOCATION OF LIFTING LOOPS (Typ.) — INTERMEDIATE BENT NO.17

BILL OF REINFORCING STEEL - EACH GIRDER

NO.	SIZE & MARK	ACTUAL LENGTH	SHAPE	BENDING DIAGRAMS
4	6 A1	"X"	20	
2	4 B1	6'-0"	11	
8	5 B2	5'-4"	11	
14	4 C1	2'-2"	10	
2	4 D1	3'-0"	9	

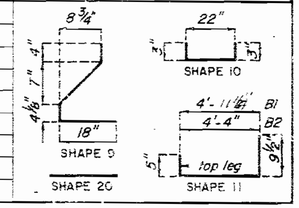

NOTE:

ALL DIMENSIONS IN BENDING DIAGRAM ARE OUT TO OUT.

HOOKS AND BENDS SHALL BE IN ACCORDANCE WITH THE CRSI MANUAL OF STANDARD PRACTICE FOR DETAILING REINFORCED CONCRETE STRUCTURES STIRRUP AND TIE DIMENSIONS.

ACTUAL LENGTHS ARE MEASURED ALONG CENTERLINE BAR TO THE NEAREST INCH.

MINIMUM CLEARANCE TO REINFORCING SHALL BE 1".

ALL REINFORCEMENT SHALL BE GRADE 60.

THE TWO D1 BARS MAY BE FURNISHED AS ONE BAR AT THE FABRICATOR'S OPTION.

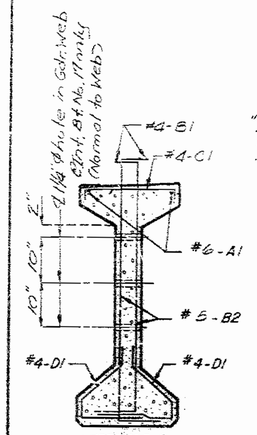

SECTION A-A (STRANDS NOT SHOWN FOR CLARITY)

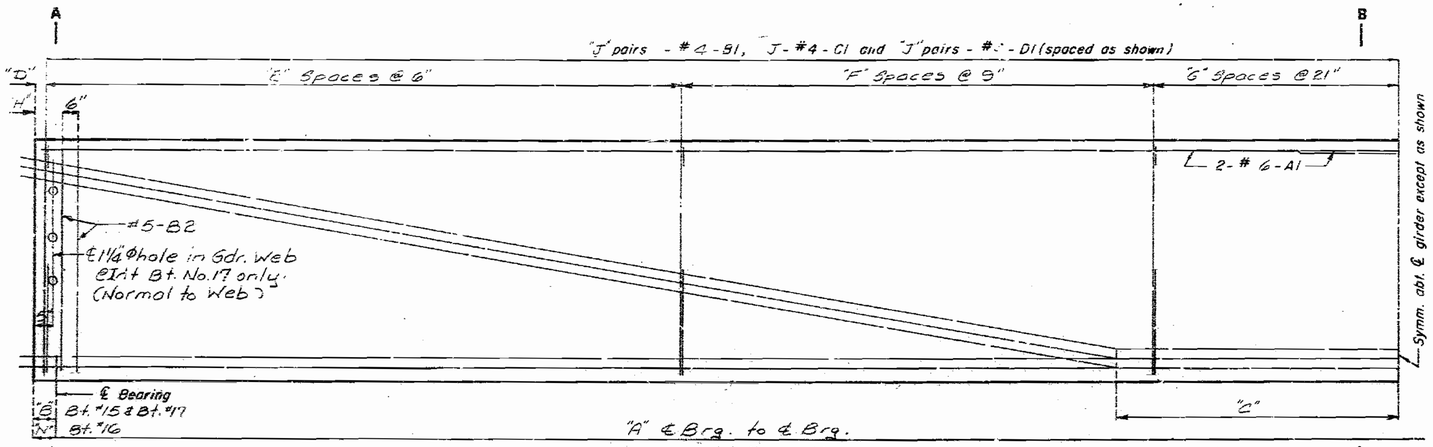

PART ELEVATION OF GIRDER NO. 3 & NO. 4

(NOTE: EXTERIOR AND INTERIOR GIRDERS ARE THE SAME EXCEPT FOR COIL TIES.)

SPANS (15-16) & (16-17)

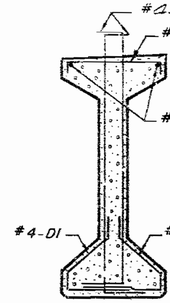

SECTION B-B (STRANDS NOT SHOWN FOR CLARITY)

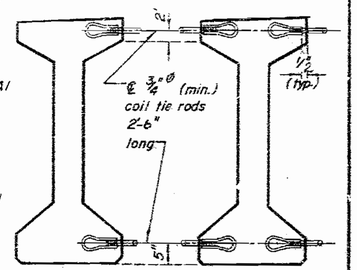

DETAILS OF COIL TIES
AT INT. BT NO.15 & 16

Note: For detail of B1 bar permissible alternate shape, see Sh. No. 22.

TABLE OF DIMENSIONS - SPAN (15-16)

GIRDER NO	"A"	"B"	"C"	"D"	"E"	"F"	"G"	"H"	"J"	"K"	"L"	"M"	"N"
3	68'-1 1/4"	6 1/4"	6'-10 1/2"	3 1/2"	20	16	7	6 1/2"	44	35'-5"	174	87	5 1/2"
4	73'-2 3/8"	5 1/8"	7'-4 1/2"	5 1/2"	23	15	8	6 1/2"	47	37'-11"	186	93	5 1/2"

TABLE OF DIMENSIONS - SPAN (16-17)

GIRDER NO	"A"	"B"	"C"	"D"	"E"	"F"	"G"	"H"	"J"	"K"	"L"	"M"	"N"
3	68'-0 1/4"	7 1/4"	6'-10 1/2"	5 1/2"	20	16	7	6 1/2"	44	35'-5"	174	87	5 1/2"
4	73'-0 1/8"	7 1/2"	7'-4 1/2"	3 1/2"	23	15	8	6 1/2"	47	37'-11"	186	93	5 3/8"

NOTE:

COST OF 3/4"ϕ COIL TIE RODS PLACED IN DIAPHRAGMS IS INCLUDED IN CONTRACT UNIT PRICE FOR PRESTRESSED CONCRETE MEMBERS.

COIL TIES SHALL BE HELD IN PLACE IN THE FORMS BY SLOTTED WIRE-SETTING-STUDS PROJECTING THRU FORMS. STUDS ARE TO BE LEFT IN PLACE OR REPLACED WITH TEMPORARY PLUGS UNTIL GIRDERS ARE ERECTED AND THEN REPLACED BY COIL TIE RODS.

Note: The 1 1/4" ϕ holes at Int Bt. No. 17 shall be cast in girder web. Drilling is not allowed.

Note: 1/2" Plates and welded studs shall be A-36 steel.

Cost of furnishing, painting and installing 1/2" plates and welded studs in girders shall be included in price bid for Prestressed I-Girder per each.

For location of coil ties, see sheet Nos. 37, 38 and 39.

For details of intermediate diaphragms, see sheets Nos. 19 and 21.

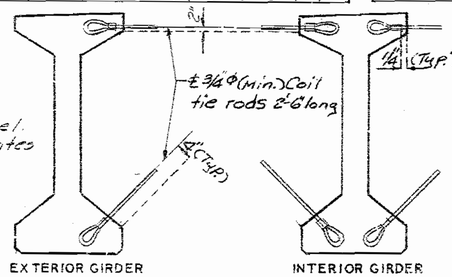

DETAILS OF COIL TIES
AT INT BENT NO.17

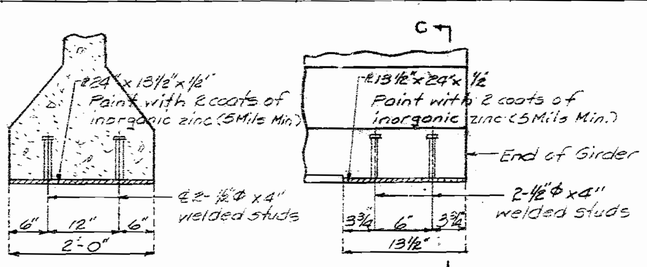

SECTION C-C

PART ELEVATION OF GIRDER AT INT BENT NO.17

NOTE:

The 1 1/2" ϕ holes shall be cast in the web for steel intermediate diaphragms. Drilling is not allowed.

For details of Earthquake Restrainers, see Sh. No. 15

For details of Elastomeric Expansion Jt. Seal at Int Bt #17, see Sh. No. 60

For Girder Camber Diagram, see Sh. No. 55.

SPS 556.62	REVISED
FEB. 1974	JUNE 1987

DETAILED APRIL 1988

CHECKED July 1989

Note: This drawing is not to scale. Follow dimensions.

JACKSON COUNTY

A-2733

STATE	PROJ NO	SHEET NO
MO		41

NOTE:

CONCRETE FOR PRESTRESSED GIRDERS SHALL BE CLASS A1 WITH Fc = 5,000 PSI.

(+) INDICATES PRESTRESSED STRAND.

USE 22 STRANDS WITH AN INITIAL PRESTRESS FORCE OF 682 KIPS.

PRESTRESSING TENDONS SHALL BE UNCOATED, SEVEN-WIRE, LOW RELAXATION STRANDS, - 1/2 INCH DIAMETER CONFORMING TO A.A.S.H.T.O. M203, GRADE 270, SEE MO. STD. SPECIFICATIONS 705.4.8.

Note: Prestressing strands at Int. Bt. #17 shall be trimmed to within 1/8" of concrete if exposed, or 1" of concrete if encased. Exposed ends of girders shall be given 2 coats of an asphalt paint. Ends of girders which will be encased in concrete diaphragms shall not be painted

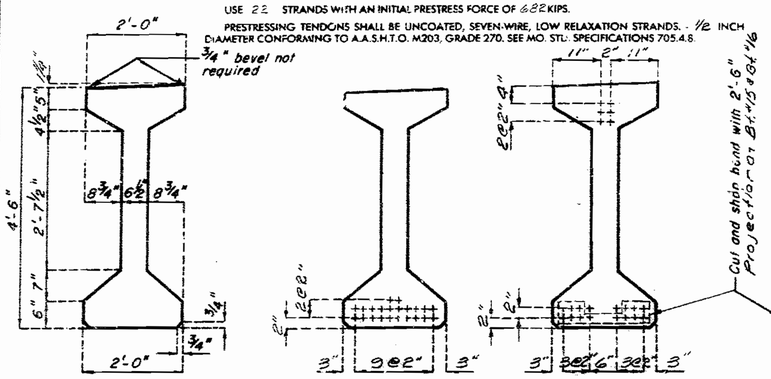

GIRDER DIMENSIONS

CL OF GIRDER END OF GIRDER

STRAND ARRANGEMENTS

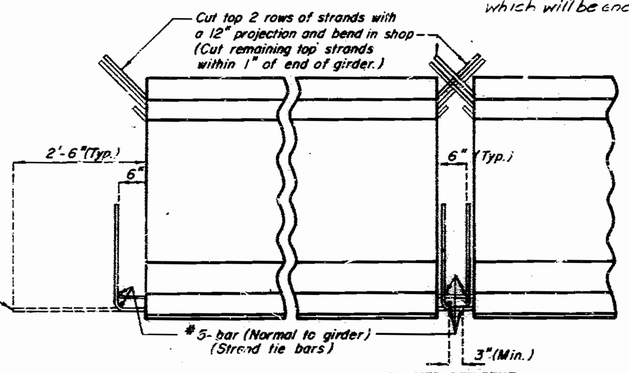

INTERMEDIATE BENT NO.15 INTERMEDIATE BENT NO.16

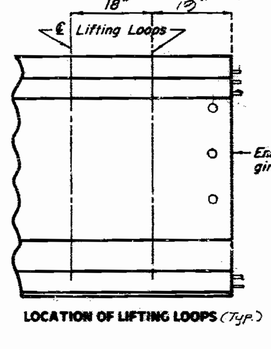

LOCATION OF LIFTING LOOPS (Typ.)

INTERMEDIATE-BENT NO.17

STRAND DETAILS AT GIRDER ENDS

BILL OF REINFORCING STEEL - EACH GIRDER

NO.	SIZE & MARK	ACTUAL LENGTH	SHAPE	BENDING DIAGRAMS
4	6 A1	"K"	20	
"L"	4 C1	6'-0"	11	
8	6 B2	5'-4"	11	
M"	4 C1	2'-2"	10	
"L"	4 D1	3'-0"	9	

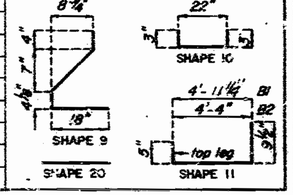

NOTE:

ALL DIMENSIONS IN BENDING DIAGRAM ARE OUT TO OUT.

HOOKS AND BENDS SHALL BE IN ACCORDANCE WITH THE CRSI MANUAL OF STANDARD PRACTICE FOR DETAILING REINFORCED CONCRETE STRUCTURES STIRRUP AND TIE DIMENSIONS.

ACTUAL LENGTHS ARE MEASURED ALONG CENTERLINE BAR TO THE NEAREST INCH.

MINIMUM CLEARANCE TO REINFORCING SHALL BE 1".

ALL REINFORCEMENT SHALL BE GRADE 60.

THE TWO D1 BARS MAY BE FURNISHED AS ONE BAR AT THE FABRICATOR'S OPTION.

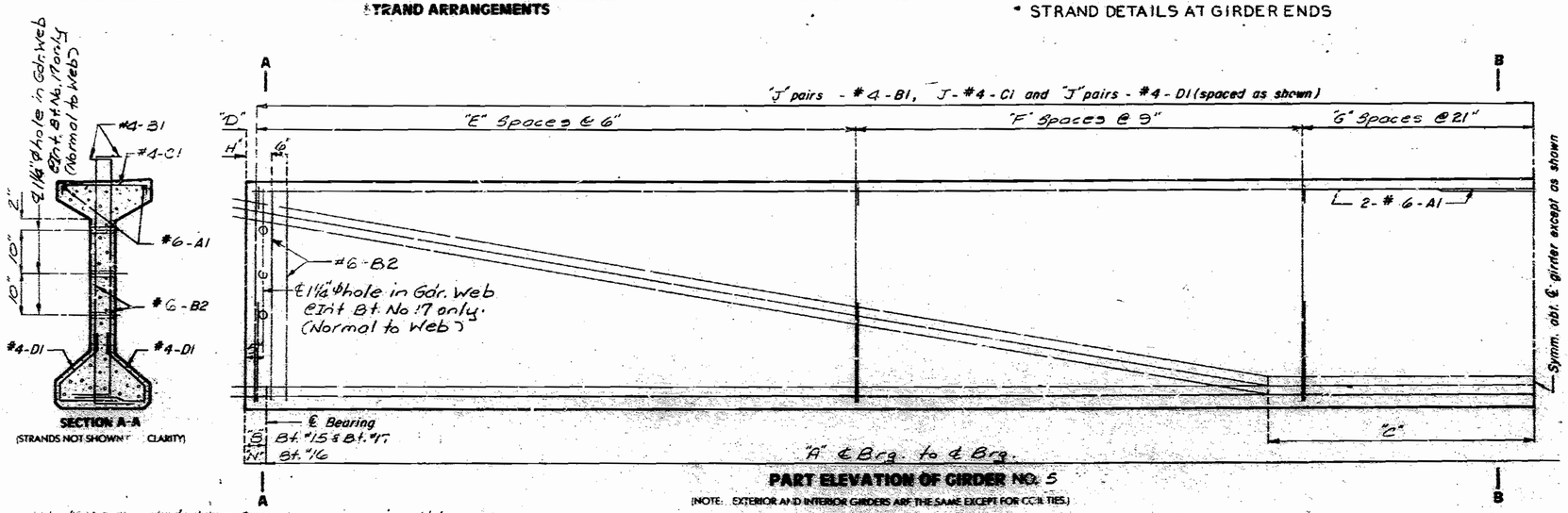

SECTION A-A (STRANDS NOT SHOWN FOR CLARITY)

PART ELEVATION OF GIRDER NO. 5

(NOTE: EXTERIOR AND INTERIOR GIRDERS ARE THE SAME EXCEPT FOR COIL TIES.)

SPANS (15-16) & (16-17)

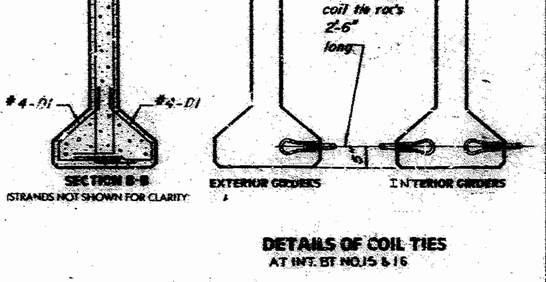

SECTION B-B (STRANDS NOT SHOWN FOR CLARITY)

EXTERIOR GIRDERS INTERIOR GIRDERS

DETAILS OF COIL TIES
AT INT. BT NO.15 & 16

NOTE:

COST OF 3/4"ϕ COIL TIE RODS PLACED IN DIAPHRAGMS IS INCLUDED IN CONTRACT UNIT PRICE FOR PRESTRESSED CONCRETE MEMBERS.

COIL TIES SHALL BE HELD IN PLACE IN THE FORMS BY SLOTTED WIRE SETTING STUDS PROJECTING THRU FORMS. STUDS ARE TO BE LEFT IN PLACE OR REPLACED WITH TEMPORARY PLUGS UNTIL GIRDERS ARE ERECTED AND THEN REPLACED FOR TIE RODS.

Note: For detail of B1 bar permissible alternate shape, see sh. No. 22.

TABLE OF DIMENSIONS - SPAN (15-16)													
GIRDER NO	"A"	"B"	"C"	"D"	"E"	"F"	"G"	"H"	"J"	"K"	"L"	"M"	"N"
5	78'-3 3/8"	5 1/8"	7'-11"	4"	25	17	8	7"	51	40'-6"	202	101	5 1/2"

TABLE OF DIMENSIONS - SPAN (16-17)													
GIRDER NO	"A"	"B"	"C"	"J"	"E"	"F"	"G"	"H"	"J"	"K"	"L"	"M"	"N"
5	78'-0"	5 1/2"	7'-11"	4	25	17	8	7	51	40'-6	202	101	5 1/2"

The 1 1/4" ϕ holes at Int Bt. No. 17 shall be cast in girder web. Drilling is not allowed.

Note: 1/2" plates and welded studs shall be A-36 steel. Cost of furnishing, painting and installing 1/2" plates and welded studs in girders shall be included in price bid for Prestressed I-Girder per each.

For location of coil Ties, see sheet Nos. 37, 38 and 39.

For details of intermediate diaphrams, see sheet Nos. 19 and 21

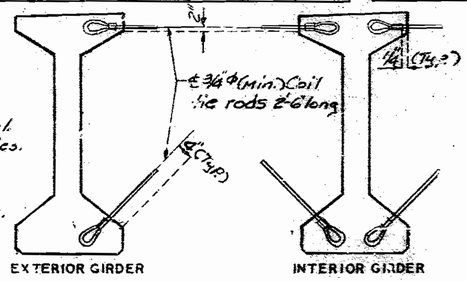

DETAILS OF COIL TIES
AT INT BENT NO.17

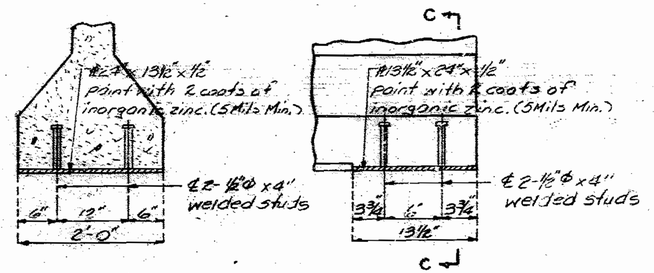

SECTION C-C

PART ELEVATION OF GIRDER AT INT BENT NO.17

NOTE:

The 1 1/2"ϕ holes shall be cast in the web for steel intermediate diaphragms. Drilling is not allowed.

For details of Earthquake Restrainers, see Sh. No. 15

For details of Elastomeric Expansion Jt. Seal at Int. Bt. #17, see Sh. No. 60.

For Girder Camber Diagram, see Sh. No. 55

SPS 55.6.6½ | FEB. 1974 | REVISED | JUNE 1987

DETAILED APRIL 1988

CHECKED July 1989

Note: This drawing is not to scale. Follow dimensions.

JACKSON COUNTY

A-2723

STATE	PROJ NO	SHEET NO.
MO.		42

Note: Diaphrams at intermediate bents are vertical.
For location of strand tie bars, see sheets No. 22 thru. 36

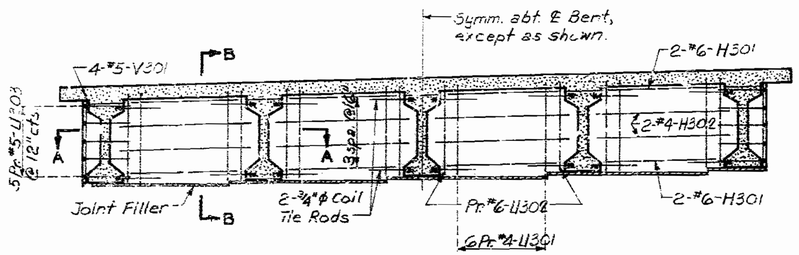

SECTION NEAR INT. BENT NO. 2 & 3

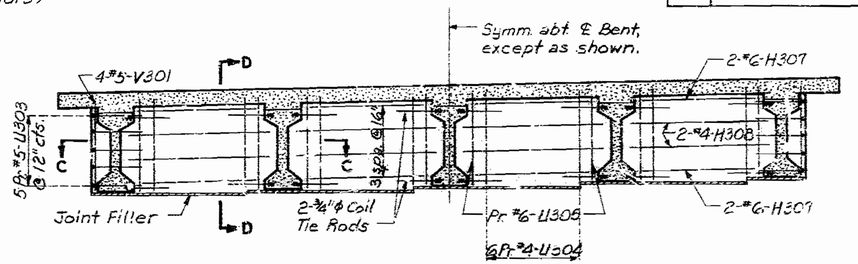

SECTION NEAR INT. BENT NO. 6, 7, 9 & 10

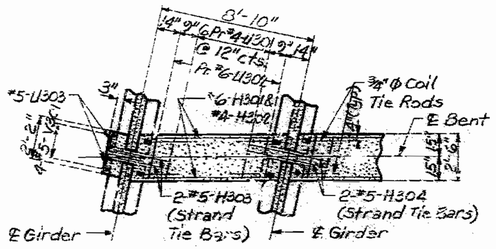

SECTION A-A

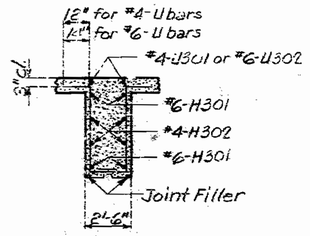

SECTION B-B

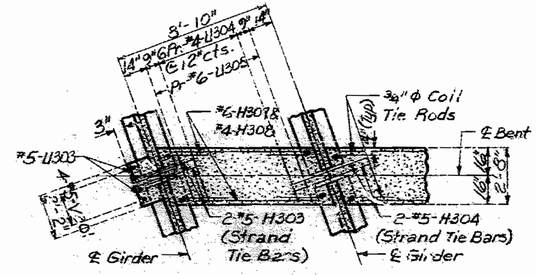

SECTION C-C

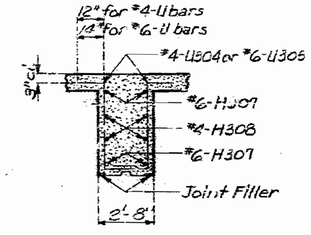

SECTION D-D

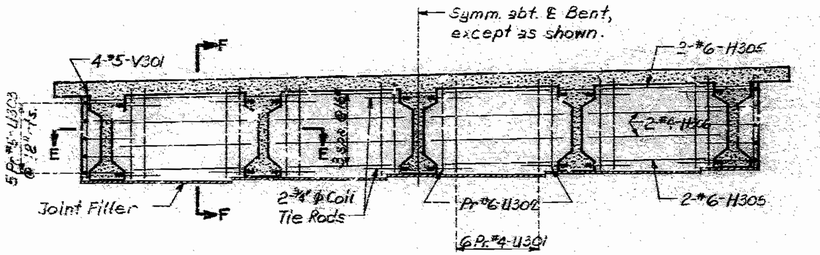

SECTION NEAR INT. BENT NO. 5

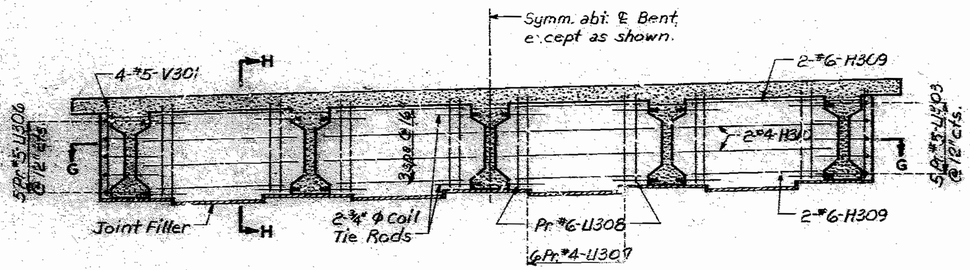

SECTION NEAR INT. BENT NO 16

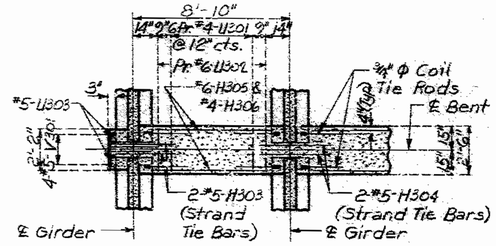

SECTION E-E

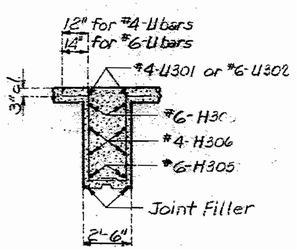

SECTION F-F

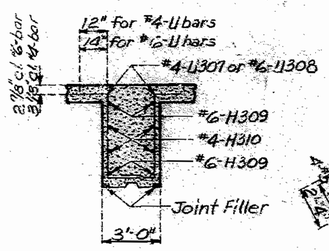

SECTION H-H

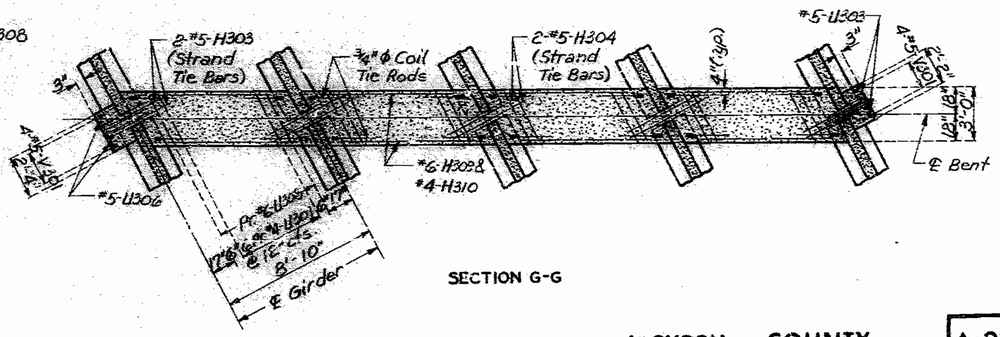

SECTION G-G

DETAILED NOV. 1988
CHECKED July 1989

Note: This drawing is not to scale. Follow dimensions.

JACKSON COUNTY

A-2733

Note: Diaphrams at intermediate bents are vertical.
For location of strand tie bars, see sheets No. 22 thru 36.

STATE	PROJ. NO	SHEET NO.
MO.		43

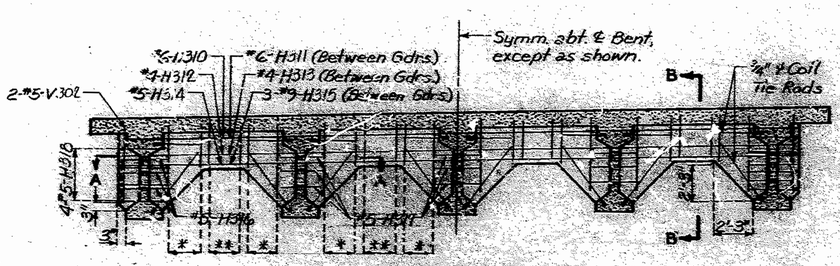

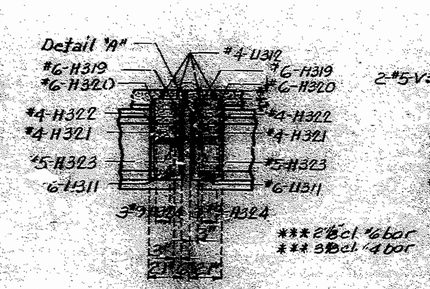

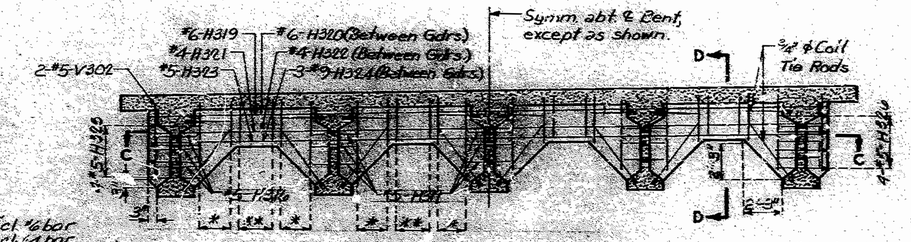

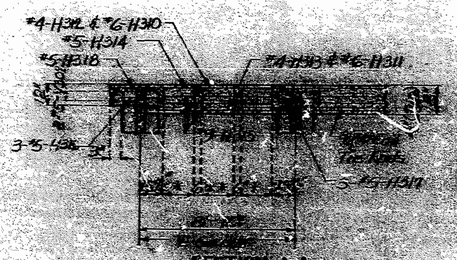

(Note- Span 4-5 like-wise Span 3-4 similar.)

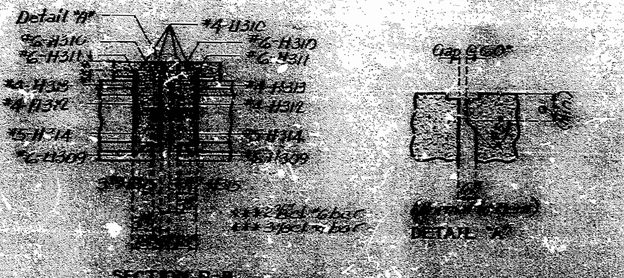

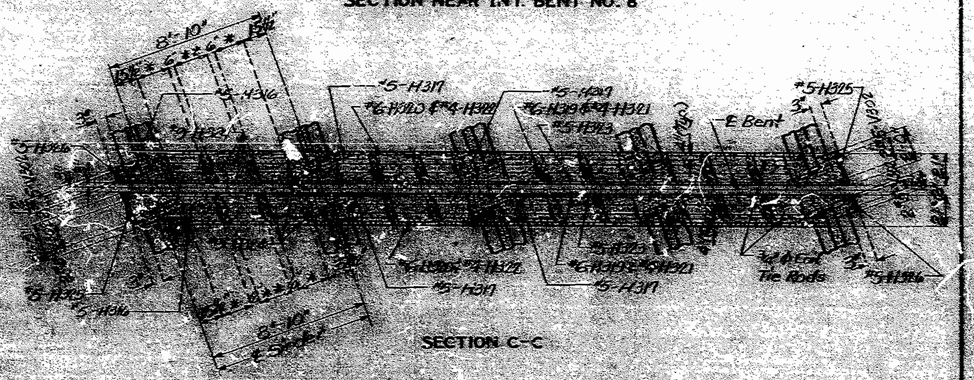

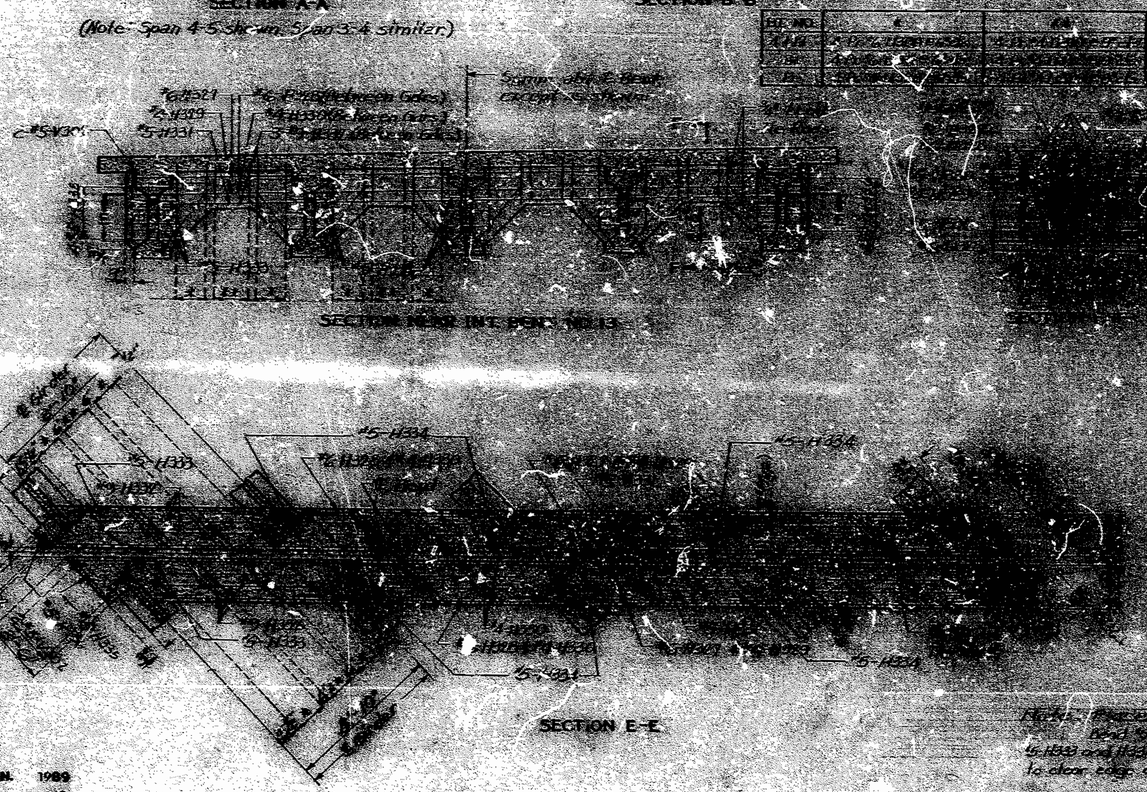

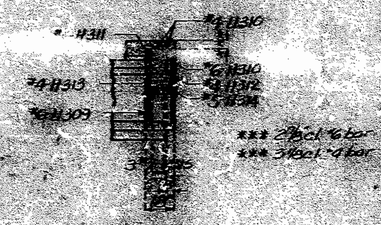

Note: Place 11-#3 bars parallel to Girders and 6-#3 bars at top of Tot. Slab #311 and 6-#3 bars at top of No. 13 in Field when necessary to clear edge of diaphragm.

DETAILED JAN. 1989
CHECKED July 1989

Note. This drawing is not to scale. Follow dimensions.

Sheet No. 38 of 76 Sheets

JACKSON COUNTY

A-2733

STATE	PROJ. NO.	SHEET NO.
MO.		44

Note: Diaphrams at intermediate bents are vertical.
For location of strand tie bars see sheets No. 22 thru 36

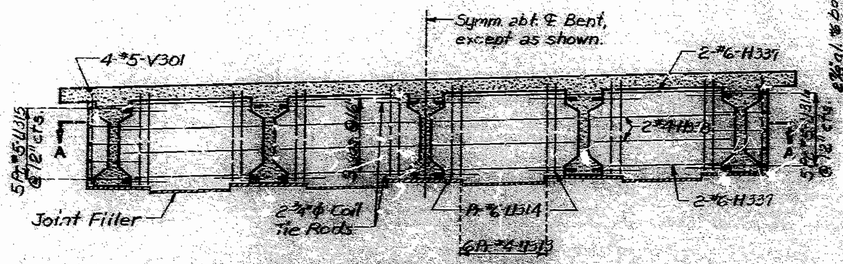

SECTION NEAR INT. BENT NO. 11

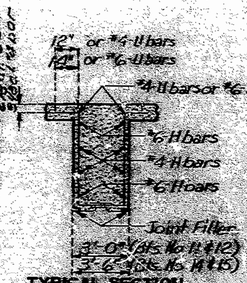

TYPICAL SECTION THRU. DIAPH.

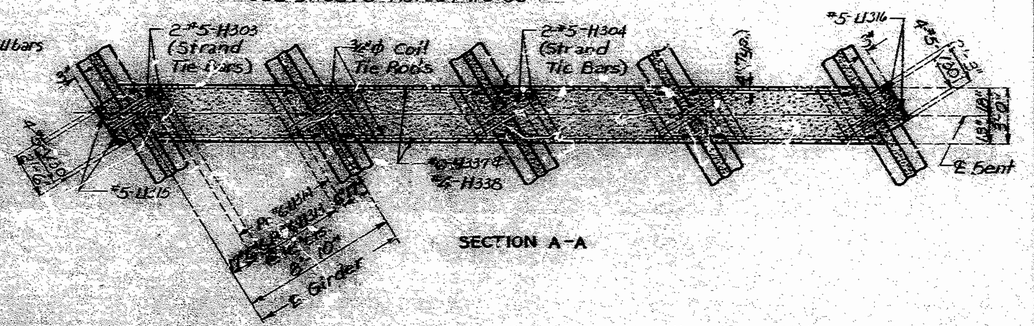

SECTION A-A

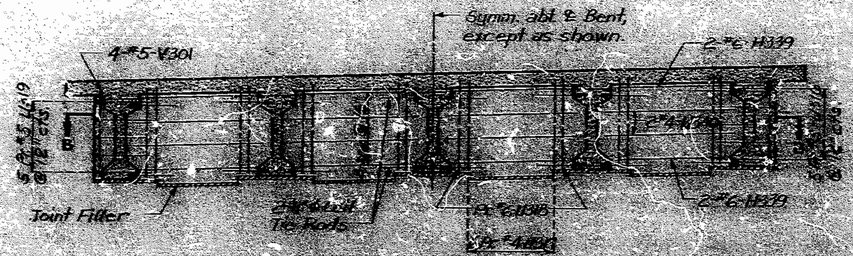

SECTION NEAR INT. BENT NO. 12

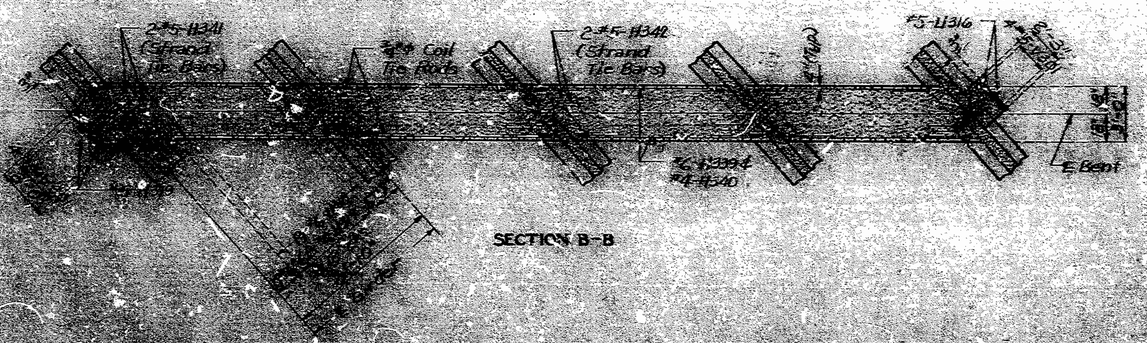

SECTION B-B

SECTION NEAR INT. BENT NO. 14

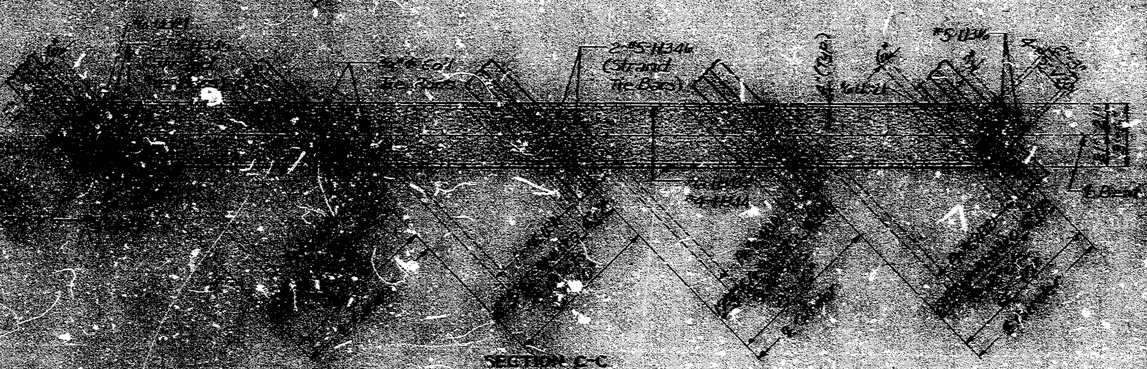

SECTION C-C

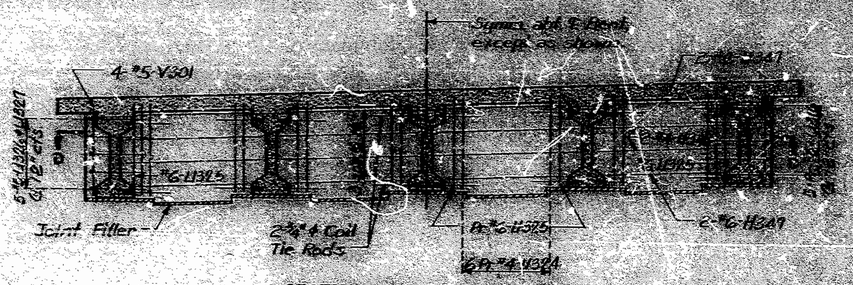

SECTION NEAR INT. BENT NO. 15

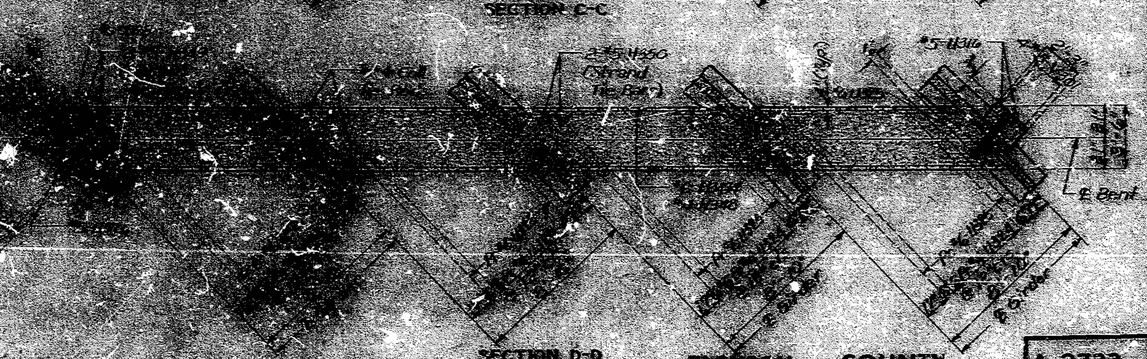

SECTION D-D

DETAILED NOV. 1988
CHECKED July 1989

Note: This drawing is not to scale. Follow dimensions.

JACKSON COUNTY

A-2733

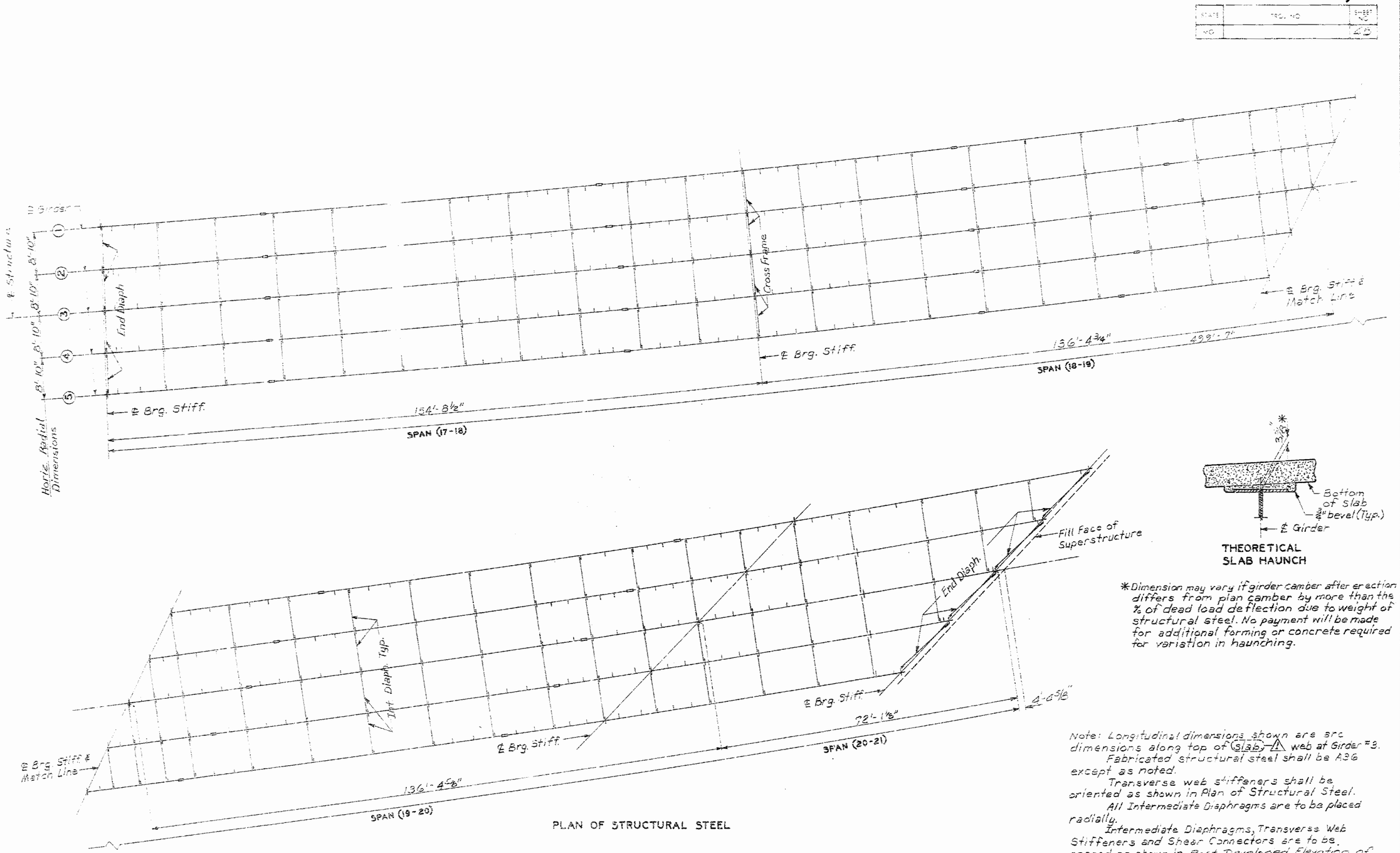

PLAN OF STRUCTURAL STEEL

THEORETICAL SLAB HAUNCH

*Dimension may vary if girder camber after erection differs from plan camber by more than the % of dead load deflection due to weight of structural steel. No payment will be made for additional forming or concrete required for variation in haunching.

Note: Longitudinal dimensions shown are arc dimensions along top of slab. ⚠ web at Girder #3.

Fabricated structural steel shall be A36 except as noted.

Transverse web stiffeners shall be oriented as shown in Plan of Structural Steel.

All Intermediate Diaphragms are to be placed radially.

Intermediate Diaphragms, Transverse Web Stiffeners and Shear Connectors are to be spaced as shown in Part Developed Elevation of Girders. See sheets No. 41 and 42.

DETAILED JUNE 1988
CHECKED [illegible] 1987

Note: This drawing is not to scale. Follow dimensions.

Sheet No. 40 of 75 ⚠ Revised Dec 6, 1989

JACKSON COUNTY A-2733

STATE	PROJ. NO.	SHEET NO.
MO.		46

* Indicates 2 spaces at 12" with 3 studs per unit.

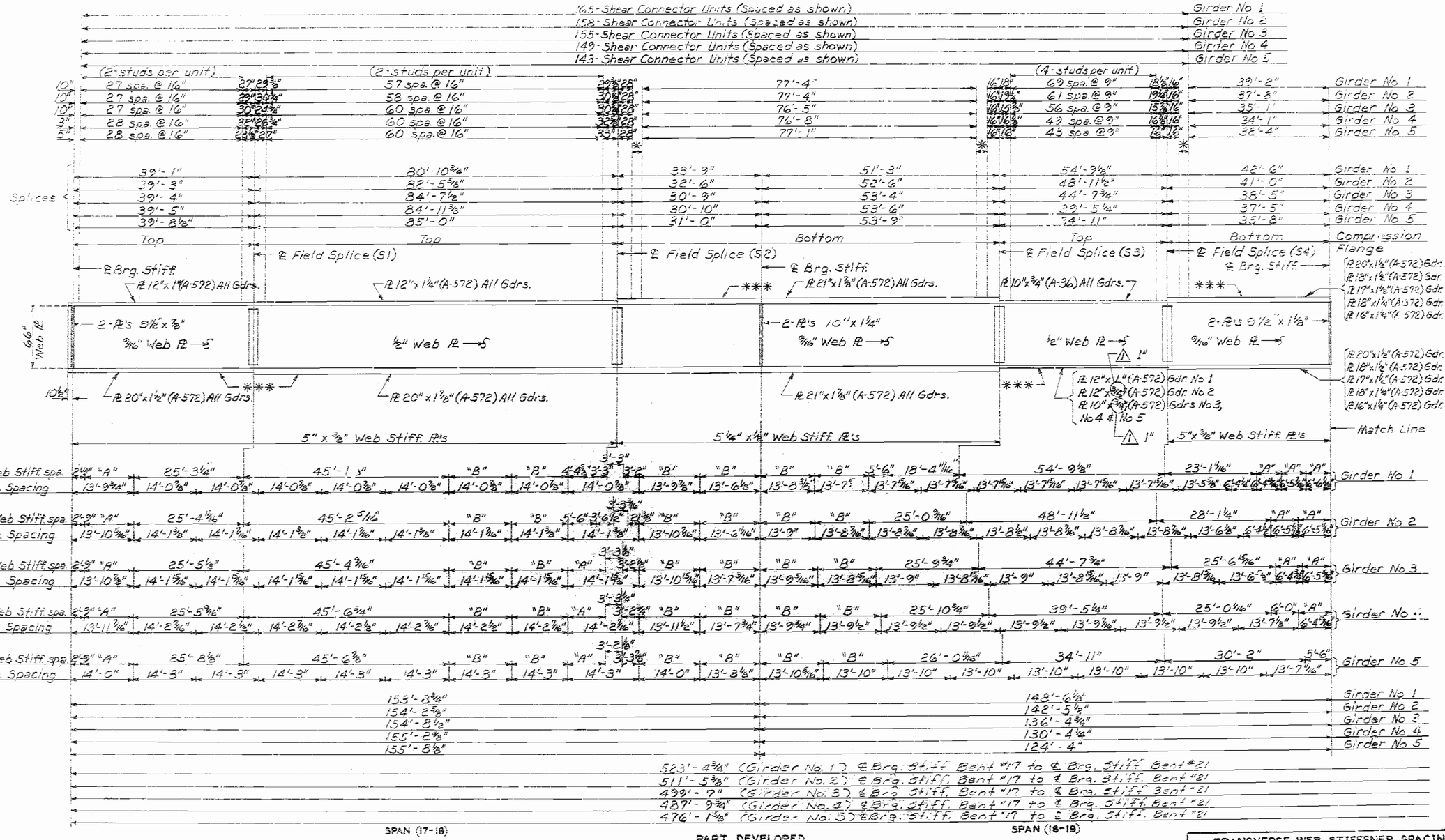

PART DEVELOPED ELEVATION OF GIRDERS

Note: Work this sheet with sheet No. 42.

TRANSVERSE WEB STIFFENER SPACING	
	EQUAL SPACES BETWEEN DIAPH.
A	Indicates 2 Equal Spaces
B	Indicates 3 Equal Spaces

SEE FINAL PLANS

DETAILED JUNE 1988
CHECKED JULY 1988

Note: This Drawing is not to Scale - Follow Dimensions

Sheet No. 41 of 75 ⚠ Revised Dec 6, 1989

JACKSON COUNTY

A-2733

STATE	PROJ. NO	SHEET NO
NO.		47

* Indicates 2 spaces at 12" with 4 studs per unit

Girder No 1 — 113 - Shear Connector Units (Spaced as shown)
Girder No 2 — 115 - Shear Connector Units (Spaced as shown)
Girder No 3 — 113 - Shear Connector Units (Spaced as shown)
Girder No 4 — 116 - Shear Connector Units (Spaced as shown)
Girder No 5 — 112 - Shear Connector Units (Spaced as shown)

		(2-studs per unit)		(2-studs per unit)	
Girder No 1	32'-10"	16"@16½" 82 spa.@12" 16"@19¾"	16¼"@16" 66'-10" 19¾"@16¼"	5"@5" 20 spa.@16"	6"
Girder No 2	27'-5⅜"	16"@19¾" 81 spa.@12" 16"@16¼"	19¾"@16¼" 62'-8" 16¼"@16"	5"@5" 23 spa.@16"	3½"
Girder No 3	25'-4⅛"	16"@16¼" 78 spa.@12" 16"@20⅜"	16¼"@16" 60'-2" 20⅜"@16¼"	5"@5" 24 spa.@16"	7"
Girder No 4	22'-2"	16"@20⅜" 79 spa.@12" 16"@21⅛"	20⅜"@16¼" 52'-11" 21⅛"@16¼"	5"@5" 26 spa.@16"	6¼"
Girder No 5	19'-5"	16"@21⅛" 74 spa.@12"	21⅛"@16¼" 53'-4"	5"@4" 27 spa.@16"	4½"

Girder No 1	36'-2"	84'-9"	27'-6"	45'-1"	27'-7⅞"	Splices
Girder No 2	30'-9⅛"	84'-3½"	27'-3"	41'-2"	31'-2⅛"	
Girder No 3	28'-8⅛"	80'-8½"	27'-0"	38'-11"	33'-2⅛"	
Girder No 4	25'-6"	82'-4⅝"	22'-7"	36'-1"	35'-8½"	
Girder No 5	22'-9"	77'-6⅝"	24'-4"	34'-9"	36'-8⅛"	
Compression Flange	Bottom	Top	Bottom	Bottom	Top	

Pl 20"x1½" (A-572) Gdr. No 1
Pl 19"x1½" (A-572) Gdr. No 2
Pl 17"x1½" (A-572) Gdr. No 3
Pl 18"x1½" (A-572) Gdr. No 4
Pl 16"x1¼" (A-572) Gdr. No 5

℄ Brg. Stiff
℄ Field Splice (S5)
Pl 10"x¾" (A-36) All Gdrs
℄ Field Splice (S6)
℄ Brg. Stiff
Pl 16"x1½" (A-572) Gdr. No 1
Pl 15"x1½" (A-572) Gdr. No 2
Pl 16"x1⅛" (A-572) Gdr. No 3
Pl 15"x1⅛" (A-572) Gdr. No 4
Pl 14"x1¼" (A-572) Gdr. No 5
℄ Shop Flange Splice (Top & Bott.)
℄ Brg. Stiff
Pl 10"x¾" (A-36) All Gdrs.

2-Pl's 3½"x1½"
⅝" Web Pl
½" Web Pl
½" Web Pl
2-Pl's 7½"x1¼"
½" Web Pl
½" Web Pl
(Girder No. 1 & 5) 1-Pl 4½"x⅜"
1-Bent Pl 8⅜"x⅜"
(Girder No. 2, 3 & 4) 2-Bent Pl's 8½"x⅜"

Pl 20"x1½" (A-572) Gdr. No 1
Pl 18"x1½" (A-572) Gdr. No 2
Pl 17"x1½" (A-572) Gdr. No 3
Pl 18"x1⅛" (A-572) Gdr. No 4
Pl 16"x1¼" (A-572) Gdr. No 5
Match Line
5"x⅜" Web Stiff Pl's

Pl 16"x1" (A-572) Gdr. No 1
Pl 15"x1" (A-572) Gdr. No 2
Pl 14"x1" (A-572) Gdr. No 3
Pl 13"x1" (A-572) Gdr. No 4
Pl 12"x1" (A-572) Gdr. No 5
4½"x⅜" Web Stiff Pl's

Pl 16"x1½" (A-572) Gdr. No 1
Pl 15"x1½" (A-572) Gdr. No 2
Pl 16"x1⅛" (A-572) Gdr. No 3
Pl 15"x1⅛" (A-572) Gdr. No 4
Pl 14"x1¼" (A-572) Gdr. No 5
Pl 10"x¾" (A-36) All Gdrs.
21"

Girder No 1	3'-2"	"B" 13'-10⅝"	"B" 14'-3¹³⁄₁₆"	7'-11⅞" 3'-2"	"B" 14'-3⅜"	40'-6⅝" 14'-3⅜"	14'-3¹³⁄₁₆"	14'-3⅜"	11'-10¹⁵⁄₁₆"	"A" 12'-6³⁄₁₆"	"A" 2'-7" 19¾"	"B" 12'-8⅛"	"B" 12'-10⅛"	"B" 13'-0⅛"	"B" 13'-5"	"B" 13'-0⅛"	18'-7⅞" 13'-2¼"	24'-10⅞" 13'-4⅜"	2'-9" 13'-9⅛"	Transverse Web Stiff spa. Diaph. Spacing
Girder No 2	3'-11¾"	"A" 6'-6⅝"	"B" 13'-10¹⁵⁄₁₆"	10'-4⅝" 14'-4⅜"	"B" 14'-4⅜"	43'-1⅛" 14'-4⅜"	14'-4⅜"	14'-4⅜"	14'-4⅜"	"B" 11'-11⅜"	"A" 2'-6" 19¾"	"B" 12'-6⅜"	"B" 12'-8⅝"	"B" 12'-10⅜"	"B" 13'-0⅛"	"B" 13'-5½"	19'-3⅝" 13'-0⅝"	28'-5⅞" 13'-2¼"	6'-8" 13'-4⅛"	Transverse Web Stiff spa. Diaph. Spacing
Girder No 3	3'-11½"	"A" 6'-5⅝"	"A" 6'-6⅞"	"B" 13'-11⅜" 20⅜"	"A" 14'-4⅝"	"B" 43'-2¾" 14'-4⅝"	14'-4⅝"	14'-4⅜"	14'-4⅝"	"A" 11'-11⅜"	"A" 2'-6" 19¾"	"A" 12'-7⅜"	"B" 12'-9⅛"	"B" 12'-11⅜"	"B" 13'-1⅛"	"B" 13'-6 1⁄16"	12'-10 13⁄16" 13'-1⅛"	30'-5⅛" 13'-3⅛"	2'-9" 6'-2½"	Transverse Web Stiff spa. Diaph. Spacing
Girder No 4	4'-0⅛"	"A" 6'-5⅜"	"A" 6'-6⅜"	12'-6¼" 13'-11⅜"	4'-0" 14'-5⅞"	"B" 43'-4⅜" 14'-5½"	14'-5⅝"	14'-5⅜"	14'-5⅞"	"B" 14'-5⅞"	2'-0⅝" 3'-5⅛"	"A" 12'-0⅞"	"B" 12'-7⅝"	"B" 12'-9⅝"	"B" 12'-11⅜"	10'-3⅜" 13'-1⅝"	32'-11½" 13'-6⅛"	2'-9" 13'-1⅝"	Transverse Web Stiff spa. Diaph. Spacing	
Girder No 5	9'-3½"	"A" 13'-0⅝"	6'-5⅜"	6'-6⅜"	6'-7⅛"	"B" 43'-6" 14'-0⅜"	14'-6"	14'-6"	14'-6"	"B" 14'-6"	2'-2¾" 3'-3¼"	"A" 14'-6"	"B" 12'-0⅜"	"B" 12'-8⅛"	"B" 12'-10⅛"	9'-2¹³⁄₁₆" 13'-0⅛"	33'-11⅞" 13'-2½"	13'-0"	6'-2½"	Transverse Web Stiff spa. Diaph. Spacing

Girder No 1	148'-5"	72'-8⅞"
Girder No 2	142'-4⅜"	72'-4⅜"
Girder No 3	136'-4⅝"	72'-1⅛"
Girder No 4	130'-5⅝"	71'-9½"
Girder No 5	124'-7⅜"	71'-5⅛"

523'-4¾" (Girder No. 1) ℄ Brg. Stiff. Bent #17 to ℄ Brg. Stiff. Bent #21
511'-5⅝" (Girder No. 2) ℄ Brg. Stiff. Bent #17 to ℄ Brg. Stiff. Bent #21
499'-7" (Girder No. 3) ℄ Brg. Stiff. Bent #17 to ℄ Brg. Stiff. Bent #21
487'-9¾" (Girder No. 4) ℄ Brg. Stiff. Bent #17 to ℄ Brg. Stiff. Bent #21
476'-1⅜" (Girder No. 5) ℄ Brg. Stiff. Bent #17 to ℄ Brg. Stiff. Bent #21

SPAN (19-20) SPAN (20-21)

PART DEVELOPED ELEVATION OF GIRDERS

Note: Fabricated structural steel shall be A36, except as noted.

Plate girders shall be fabricated to conform with Camber Diagram shown on Sheet No. 49.

Transverse Web Stiffeners shall be oriented as shown in Plan of Structural Steel on Sheet No. 40.

All web plates shall be subject to notch toughness requirements.

*** Indicates Flange Plates subject to notch toughness requirements.

For details of shear connectors see Sheet No. 45.

Diaphragm Connection Plates are the same size as Transverse Web Stiffeners

Intermediate web stiffener plate and diaphragm spacing may vary from plan dimensions by a maximum of 3" for diaphragm to connect to intermediate web stiffener plate.

Longitudinal dimensions are arc dimensions along centerline girder parallel to grade ⚠ at top of web.

For clipping details at Bent No. 21 see Sheet No. 46.

TRANSVERSE WEB STIFFENER SPACING	
	EQUAL SPACES BETWEEN DIAPH
A	Indicates 2 Equal Spaces
B	Indicates 3 Equal Spaces

DETAILED JUNE 1988
CHECKED July 1989

Note: This drawing is not to scale Follow dimensions

Sheet No. 48 of 75 ⚠ Revised Dec. 6, 1989

JACKSON COUNTY

A-2733

STATE	PROJ. NO.	SHEET NO.
MO.		43

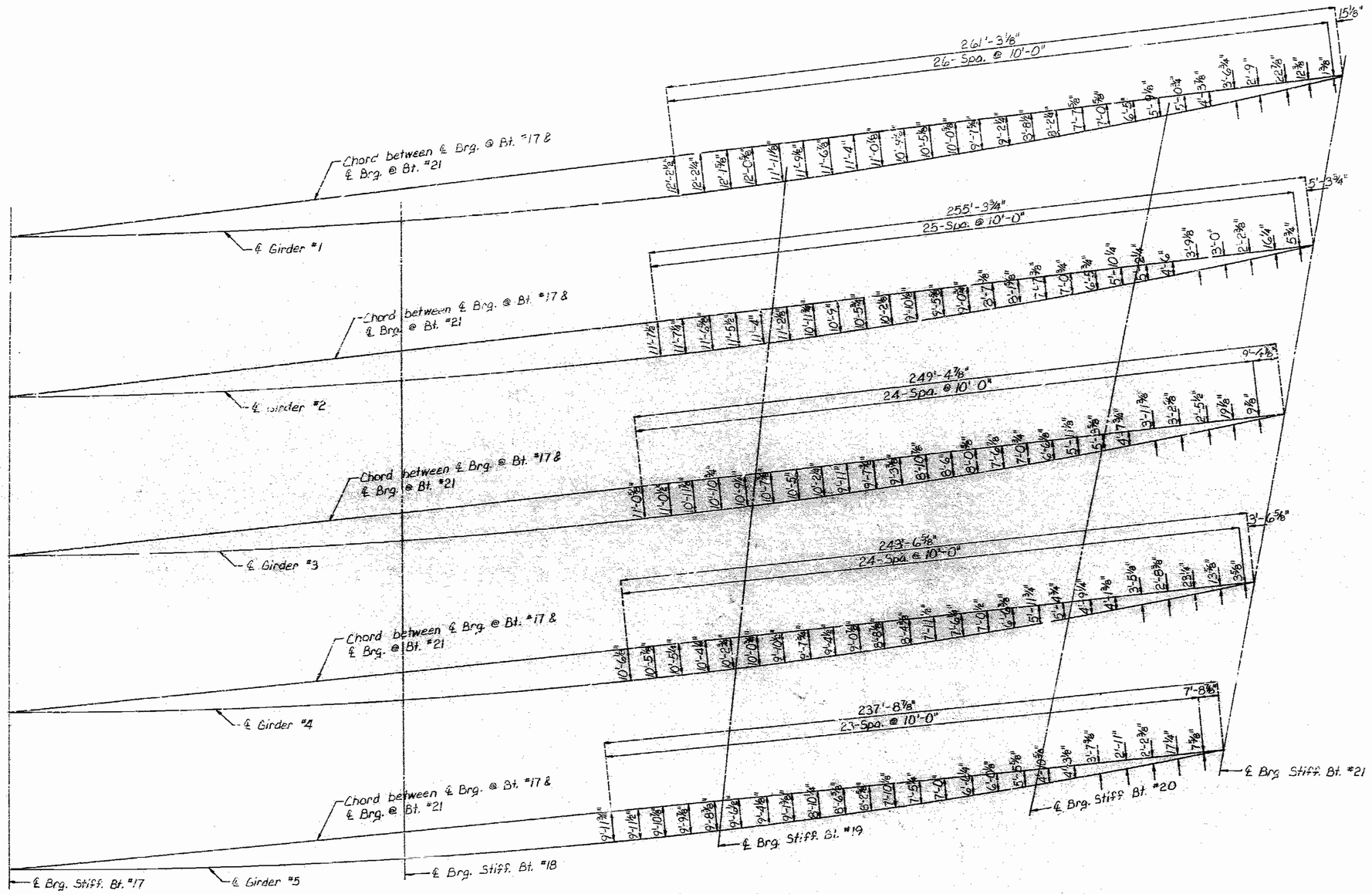

PLAN OF STRUCTURAL STEEL SHOWING ℄ GIRDER CURVE OFFSETS

Note : Longitudinal dimensions are horizontal along Chord.

DETAILED July 1989
CHECKED July 1989

Note: This drawing is not to scale. Follow dimensions.

STATE	PROJ. NO.	SHEET NO.
MO.		49

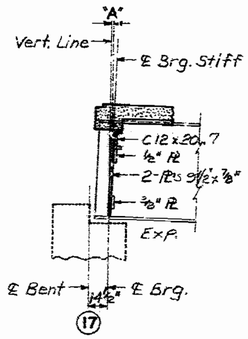

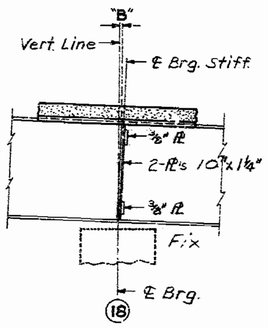

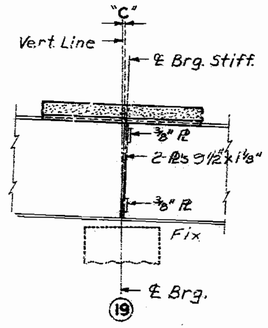

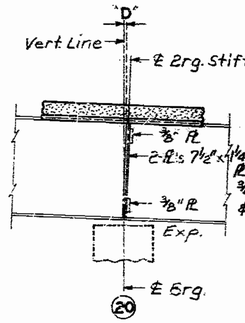

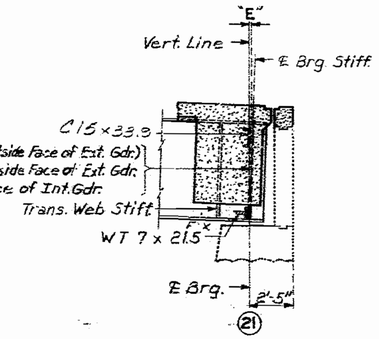

TABLE OF TILT					
GIRDER	"A"	"B"	"C"	"D"	"E"
1	¼"	½"	⅝"	1⅛"	1¼"
2	¼"	½"	⅞"	1⅛"	1¼"
3	¼"	½"	⅞"	1⅛"	1¼"
4	¼"	½"	⅞"	1"	1¼"
5	¼"	½"	⅞"	1"	1⅛"

PART LONGITUDINAL SECTIONS

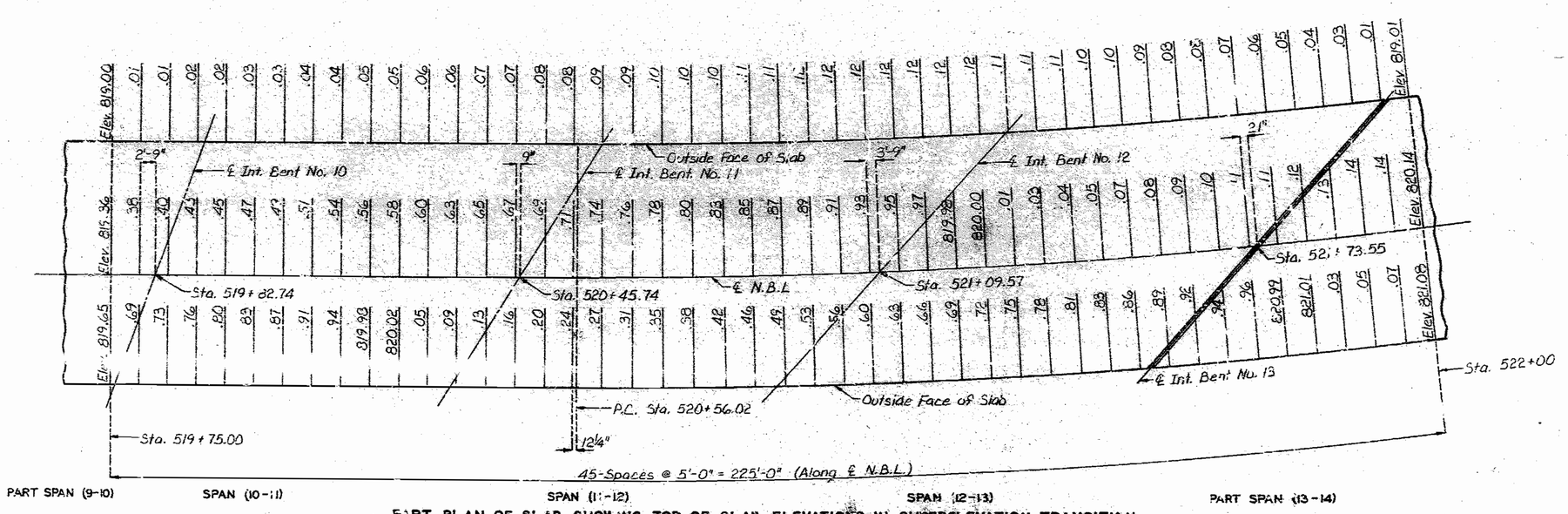

PART PLAN OF SLAB SHOWING TOP OF SLAB ELEVATIONS IN SUPERELEVATION TRANSITION

Note : Stations shown are along ℄ Median.
Bent offset dimensions are along ℄ N.B.L.
Top of slab elevations at outside face of slab
are located along radial projections from ℄ N.B.L.

DETAILED FEB. 1989
CHECKED July 1989

Note: This drawing is not to scale Follow dimensions.

STATE	PROJ. NO.	SHEET NO.
MO.		50

* 3" for Type A & C
3½" for Type B & D

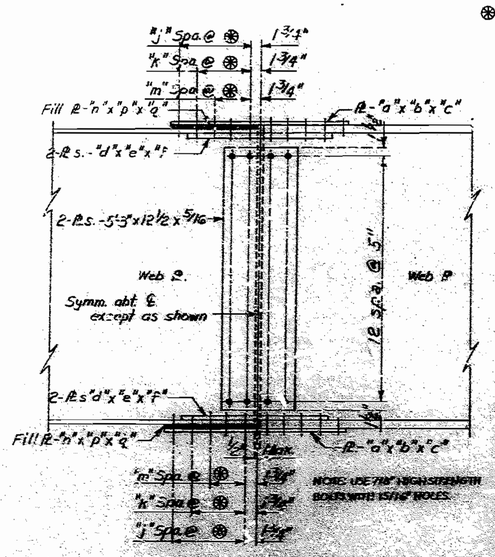

ELEV. OF SPLICE

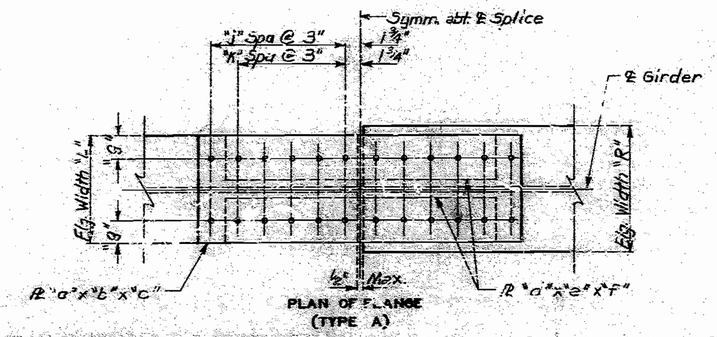

PLAN OF FLANGE (TYPE A)

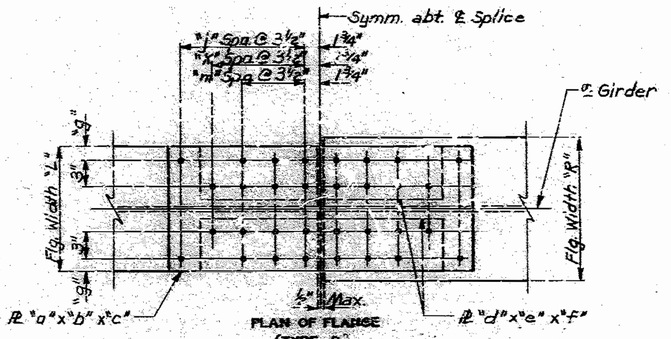

PLAN OF FLANGE (TYPE B)

⚠ TABLE A

Splice No.	Girder No.	Location	"b"	"c"	"e"	"f"	"j"	"k"	"p"	"q"
S3	2	Bott.	¾"	3'-0½"	¾"	2'-6½"	5	4	⅝"	18"
S3	3,4&5	Bott.	¾"	2'-6½"	⅞"	2'-0½"	4	3	⅝"	15"
S4	2	Bott.	¾"	3'-0½"	¾"	2'-6½"	5	4	½"	18"
S4	3	Bott.	¾"	2'-6½"	⅞"	2'-0½"	4	3	½"	15"
S4	4	Bott.	¾"	2'-6½"	⅞"	2'-0½"	4	3	½"	15"
S4	5	Bott.	¾"	2'-6½"	⅞"	2'-0½"	4	3	½"	15"

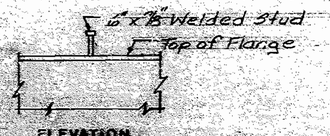

ELEVATION

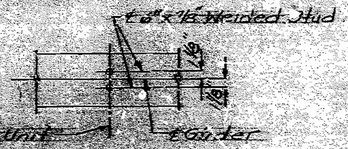

PLAN OF STUD CONN.
(12 studs per unit)

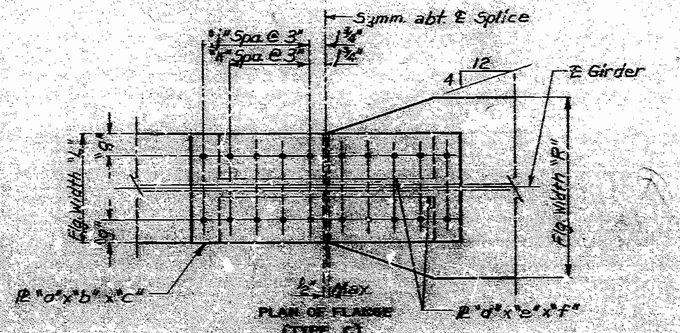

PLAN OF FLANGE (TYPE C)

ELEVATION

PLAN OF STUD CONN.
(4 studs per unit)

PLAN OF SHEAR CONNECTORS

Note: Weight of 3 rows of shear connectors is included in weight of fabricated structural carbon steel.

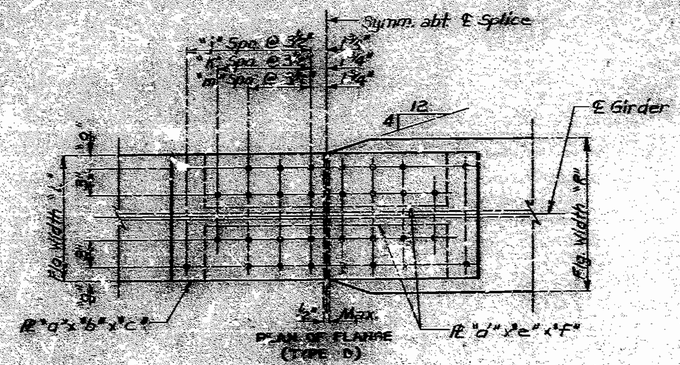

PLAN OF FLANGE (TYPE D)

TABLE OF DIMENSIONS

	Splice No.	Girder No.	Location	"a"	"b"	"c"	"d"	"e"	"f"	"g"	"j"	"k"	"m"	"n"	"p"	"q"	Flg. Width "L"	Flg. Width "R"
TYPE C	S1	A1	Top	12"	¾"	3'-0½"	6"	¾"	2'-6½"	3"	5	4	–	12"	5"	18"	12"	12"
	S6	4	Bott.	13"	¾"	3'-0½"	5½"	¾"	2'-6½"	3"	6	5	–	15"	4"	21"	20"	15"
	S6	5	Bott.	12"	¾"	3'-0½"	10"	¾"	2'-6½"	6½"	5	4	–	12"	4"	18"	12"	12"
TYPE B	S1	All	Bott.	28"	1"	2'-3"	5"	1"	1'-9"	3"	8	8	6	20"	8"	2'-1"	20"	20"
	S2	All	Both	20"	1"	2'-3"	5"	1"	1'-9"	3"	10	9	7	–	–	–	20"	20"
TYPE A	S6	1	Bott.	16"	¾"	2'-10½"	7"	1"	2'-3½"	2"	4	4	2	16"	4"	17"	16"	16"
	S6	2	Bott.	16"	¾"	2'-10½"	6½"	1"	2'-3½"	2"	4	3	2	15"	4"	17"	15"	15"
	S6	3	Bott.	14"	¾"	2'-10½"	6½"	1"	2'-3½"	2"	4	3	2	14"	4"	17"	14"	14"
	S2	All	Top	12"	1"	2'-10½"	5"	½"	2'-3½"	2"	7	6	–	12"	3"	20"	12"	20"
	S3	All	Both	10"	¾"	2'-10½"	4"	½"	2'-3½"	2"	10	9	–	10"	3"	17"	10"	17"
	S3	1	Bott.	16"	¾"	2'-10½"	7"	1"	2'-3½"	2"	4	4	2	16"	4"	17"	16"	20"
	S3	2	Bott.	15"	¾"	2'-10½"	6½"	1"	2'-3½"	2"	4	3	2	15"	4"	17"	15"	18"
	S3	3,4&5	Bott.	14"	¾"	2'-10½"	6"	1"	2'-3½"	2"	4	3	2	14"	4"	17"	14"	17"
	S4	1	Top	16"	¾"	2'-10½"	7"	1"	2'-3½"	2"	4	4	2	16"	4"	17"	16"	20"
	S4	2	Bott.	15"	¾"	2'-10½"	6½"	1"	2'-3½"	2"	4	3	2	15"	4"	17"	15"	18"
	S4	3	Bott.	14"	¾"	2'-10½"	6"	1"	2'-3½"	2"	4	3	2	14"	4"	17"	14"	17"
	S4	4	Bott.	13"	¾"	2'-10½"	5½"	1"	2'-3½"	2"	4	3	2	13"	4"	17"	13"	16"
	S4	5	Bott.	12"	¾"	2'-10½"	5"	1"	2'-3½"	2"	4	3	2	12"	4"	17"	12"	16"
	S5	1	Top	16"	¾"	2'-10½"	7"	1"	2'-3½"	2"	4	4	2	16"	4"	17"	16"	20"
	S5	2	Top	15"	¾"	2'-10½"	6½"	1"	2'-3½"	2"	4	3	2	15"	4"	17"	15"	18"
	S5	3	Top	14"	¾"	2'-10½"	6"	1"	2'-3½"	2"	4	3	2	14"	4"	17"	14"	17"
	S5	4	Top	13"	¾"	2'-10½"	5½"	1"	2'-3½"	2"	4	3	2	13"	4"	17"	13"	16"
	S5	5	Top	12"	¾"	2'-10½"	5"	1"	2'-3½"	2"	4	3	2	12"	4"	17"	12"	16"
	S5	4	Bott.	13"	¾"	3'-0½"	5½"	¾"	2'-6½"	3"	6	5	–	13"	4"	21"	13"	18"
	S5	5	Bott.	12"	¾"	3'-0½"	5"	¾"	2'-6½"	3"	5	4	–	12"	4"	18"	12"	16"
	S6	1	Top	16"	¾"	12½"	7"	¾"	10½"	2"	2	2	–	16"	¾"	9"	16"	16"
	S6	2	Top	15"	¾"	12½"	6½"	¾"	10½"	2"	2	2	–	15"	¾"	9"	15"	15"
	S6	3	Top	14"	¾"	12½"	6"	¾"	10½"	2"	2	2	–	14"	¾"	9"	14"	14"
	S6	4	Top	13"	¾"	12½"	5½"	¾"	10½"	2"	2	2	–	13"	¾"	9"	13"	13"
	S6	5	Top	12"	¾"	12½"	5"	¾"	10½"	2"	2	2	–	12"	¾"	9"	12"	13"
TYPE D	S5	1	Bott.	16"	¾"	2'-10½"	7"	1"	2'-3½"	2"	4	4	2	16"	4"	17"	16"	20"
	S5	2	Bott.	15"	¾"	2'-10½"	6½"	1"	2'-3½"	2"	4	3	2	15"	4"	17"	15"	18"
	S5	3	Bott.	14"	¾"	2'-10½"	6"	1"	2'-3½"	2"	4	3	2	14"	4"	17"	14"	17"

⚠ Revise dimensions shown in Table A

SEE FINAL PLANS

DETAILED JULY 1988
CHECKED July 1989

Note: This drawing is not to scale. Follow dimensions.

Sheet No. 45 of 75 ⚠ Revised Dec. 6, 1989

JACKSON COUNTY

A-2733

STATE	PROJ. NO.	SHEET NO.
MO.		51

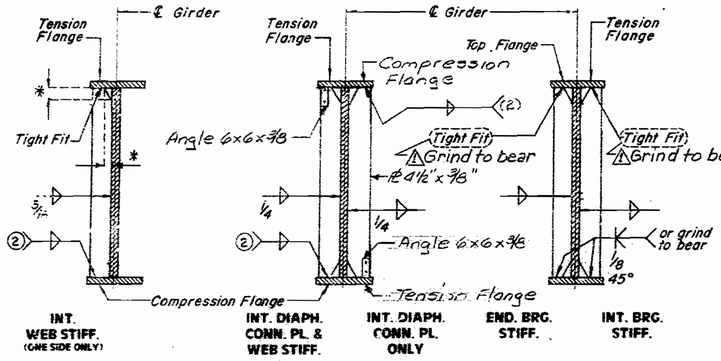

(2) Weld to compression flange as located on ELEVATION OF GIRDER.
* 1½" x 3" typical for all Int. Web Stiff., Int. Diaph. Conn. PL. and Brg. Stiff.,

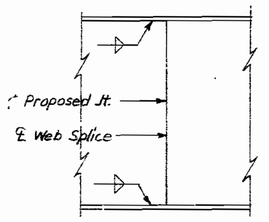

SHOP WEB SPLICE

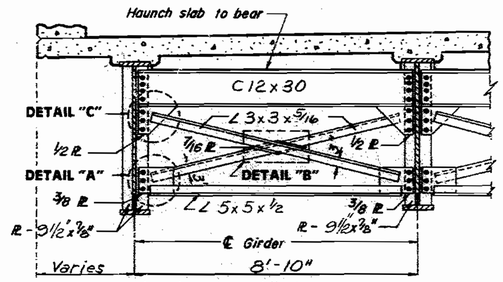

TYPICAL PART SECTION SHOWING END DIAPHRAGMS
(At Int. Bent No.17)

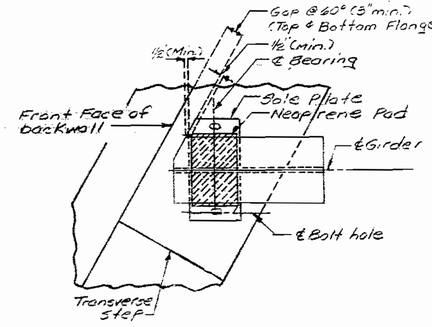

CLIPPING DETAILS
BENT NO. 21

WELDING DETAILS

Note: The two 3/8" ϕ H.S. Bolts that connect the 6x6x3/8 angle to the top flange shall be placed so the nut is on the inside of flange toward the web.

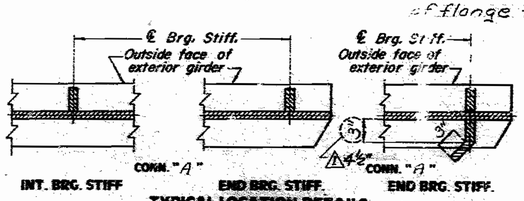

TYPICAL LOCATION DETAILS

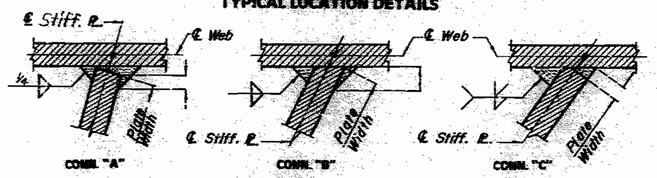

WELDING DETAILS

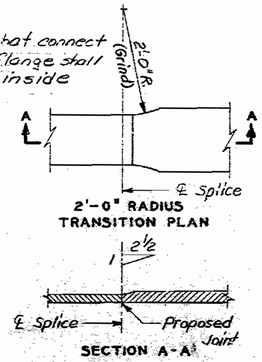

2'-0" RADIUS TRANSITION PLAN

SECTION A-A

WELDED SHOP FLANGE SPLICE

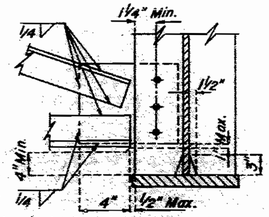

DETAIL "A"

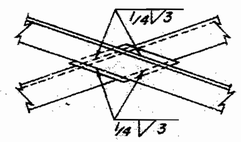

DETAIL "B"

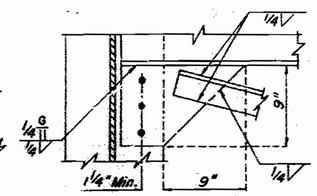

DETAIL "C"

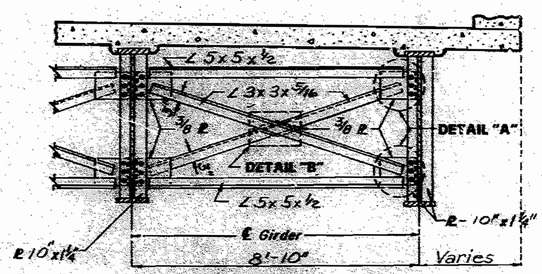

TYPICAL PART SECTION SHOWING CROSS FRAMES

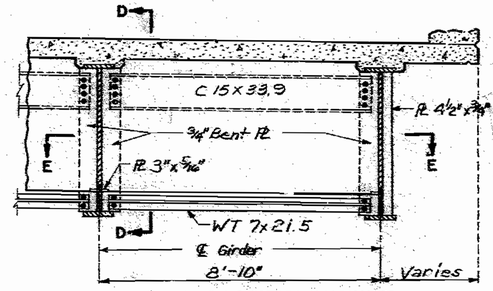

TYPICAL PART SECTION SHOWING END DIAPHRAGMS
(At End Bent No 21)

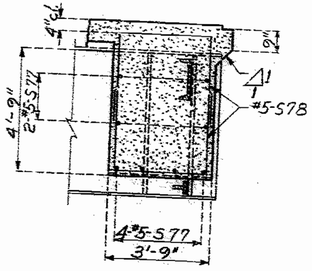

SECTION G-G

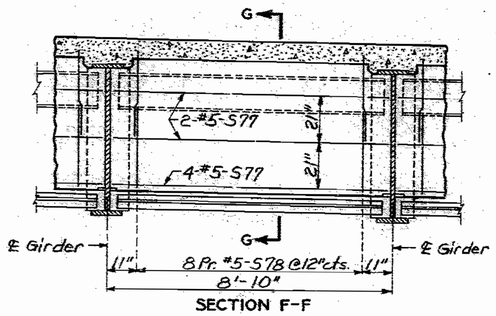

SECTION F-F

Note: For location of Section F-F see Sheet No 54.

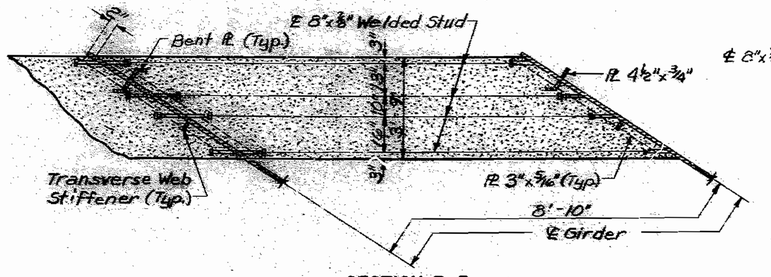

SECTION E-E

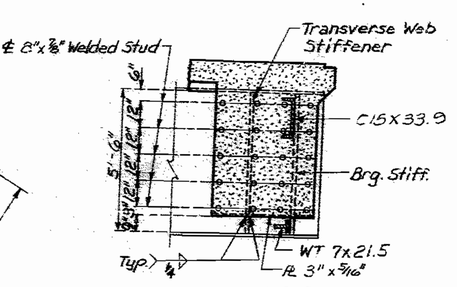

SECTION D-D

DETAILED FEB. 1989
CHECKED July 1989

Note: This drawing is not to scale. Follow dimensions.

SEE FINAL PLANS

Sheet No. 46 of 75 ⚠ Revised 3-22-90

JACKSON COUNTY A-2733

STATE	PROJ NO.	SHEET NO.
KS		56

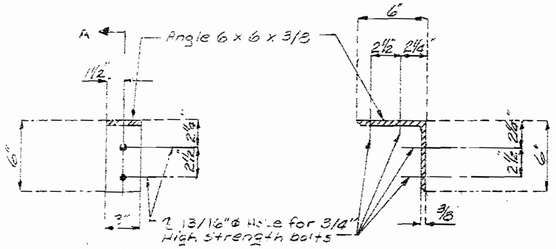

DETAIL OF FLANGE CONNECTION ANGLE

SECTION A-A

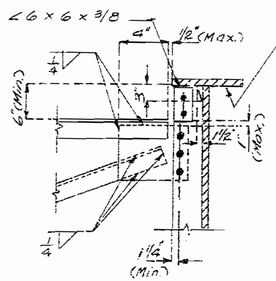

DETAIL "D"

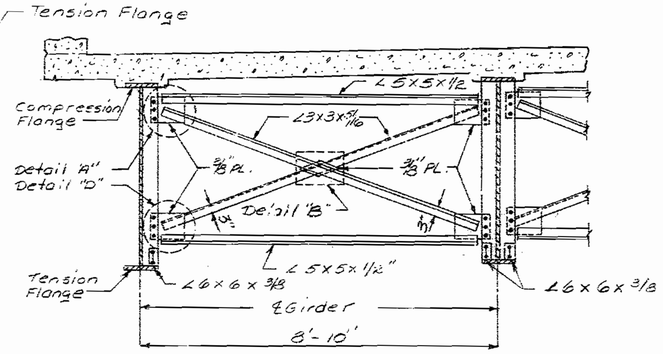

TYPICAL PART SECTION SHOWING INTERMEDIATE DIAPHRAGMS BOTTOM FLANGE IN TENSION

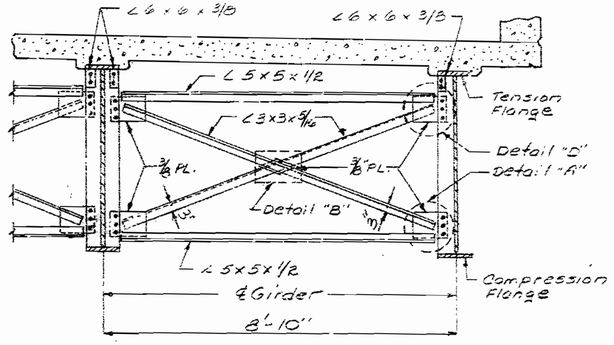

TYPICAL PART SECTION SHOWING INTERMEDIATE DIAPHRAGMS TOP FLANGE IN TENSION

Note: For detail "A" and detail "B", see sh. No. 46.

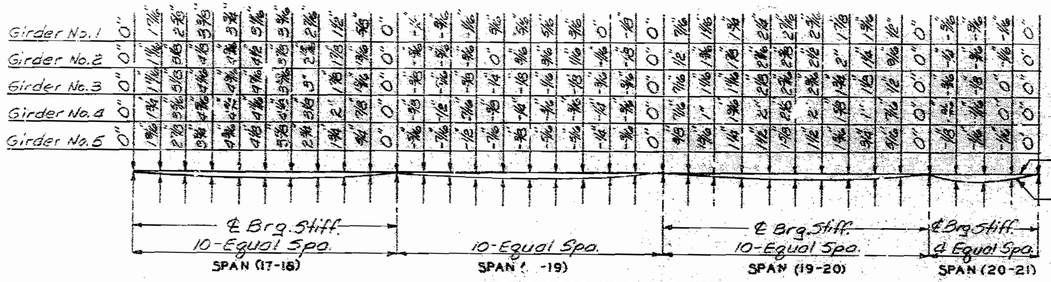

DEAD LOAD DEFLECTION (C-1-P)

Note: 19 % of Dead Load Deflection is due to weight of structural steel.

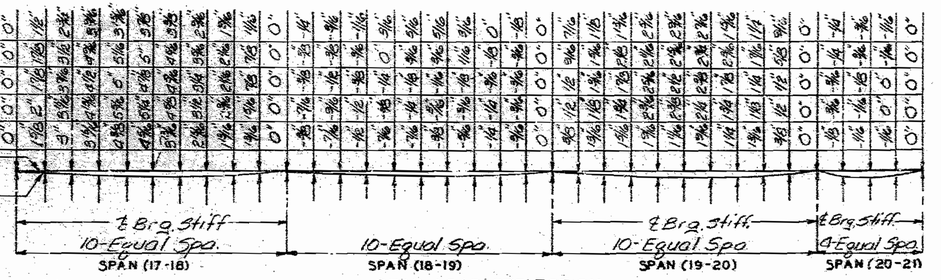

DEAD LOAD DEFLECTION (S-1-P)

Note: 18% of Dead Load Deflection is due to weight of structural steel.

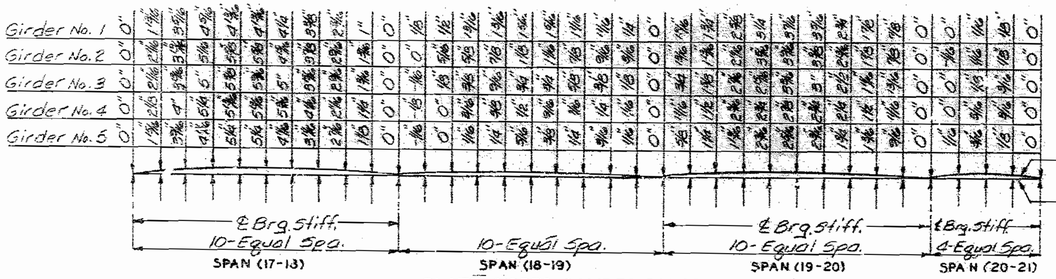

PLATE GIRDER CAMBER DIAGRAM (C-1-P)

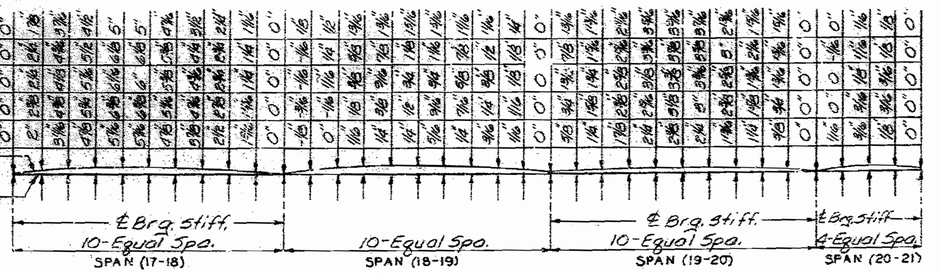

PLATE GIRDER CAMBER DIAGRAM (S-1-P)

Note: Camber includes allowance for vertical curve and for dead load deflection due to concrete slab, curb and structural steel.

74 54

DETAILED JUNE 1989
CHECKED July 1989

Note. This drawing is not to scale. Follow dimensions.

STATE	PROJ. NO	SHEET NO.
MO.		53

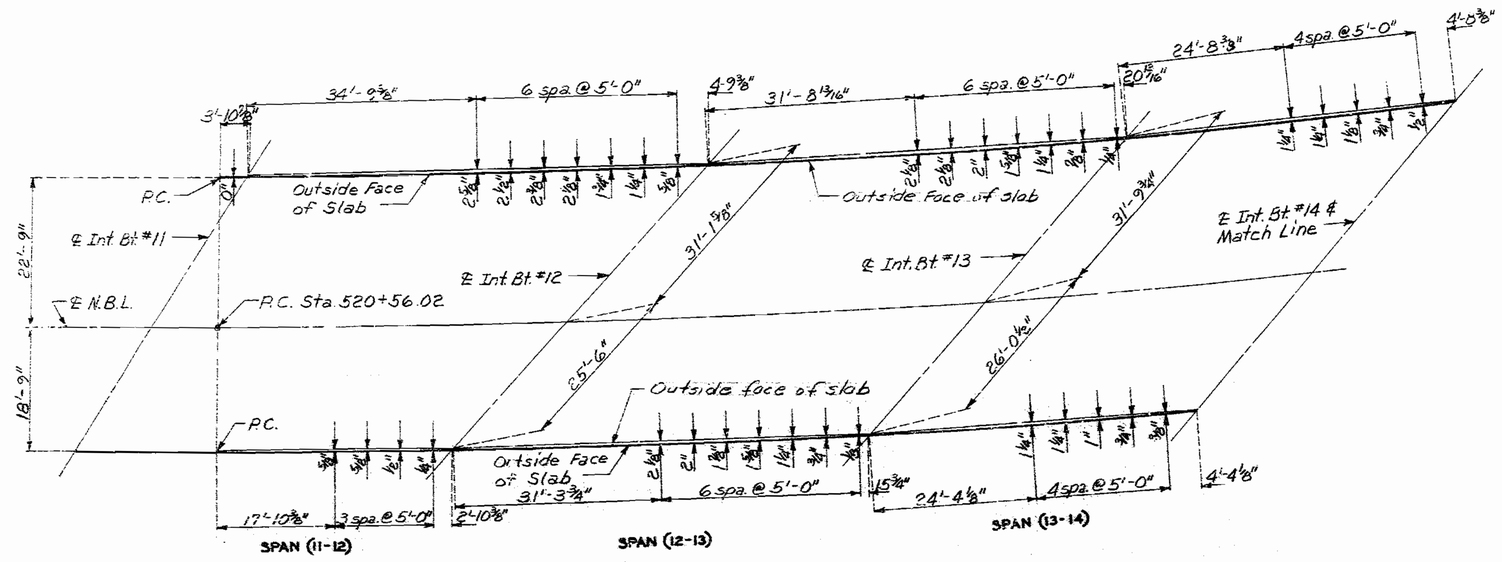

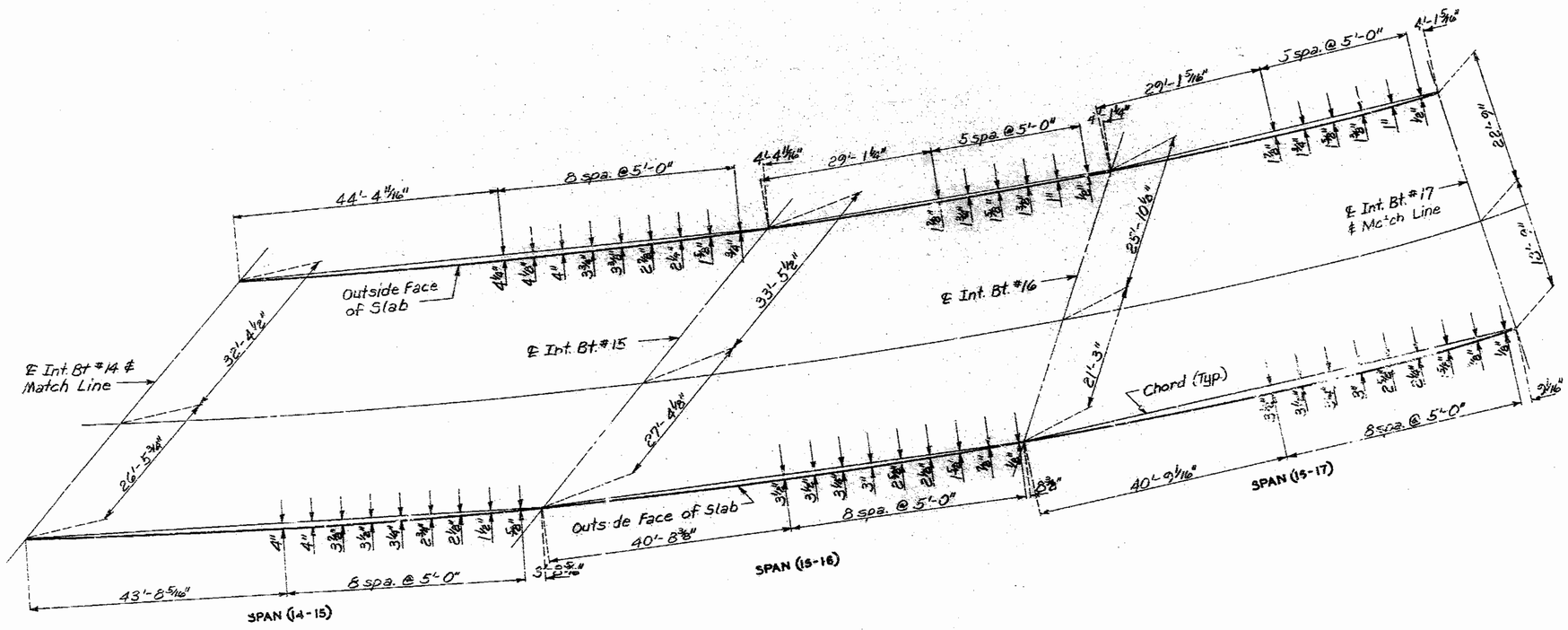

PART PLAN OF SLAB SHOWING CURVE ORDINATES

Note: All dimensions are horizontal.

DETAILED **JUNE** 1989
CHECKED July 1989

Note: This drawing is not to scale. Follow dimensions.

STATE	PROJ. NO.	SHEET NO.
MO		54

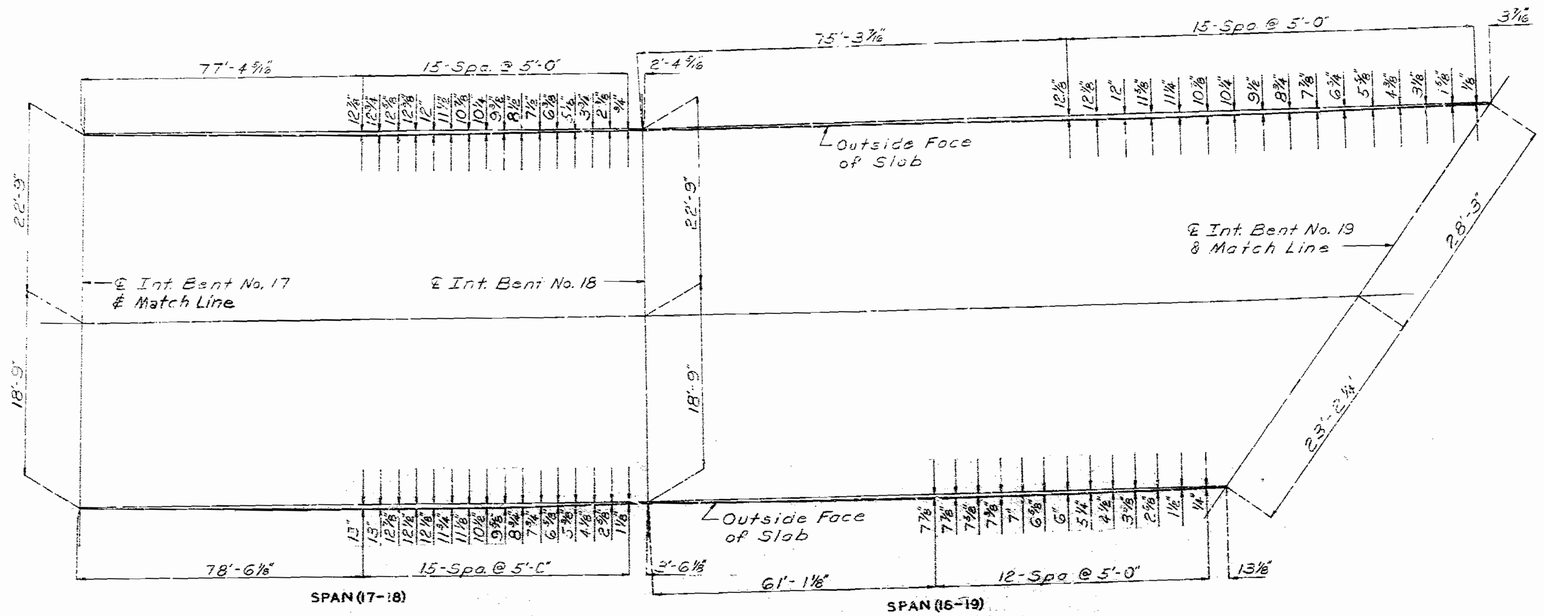

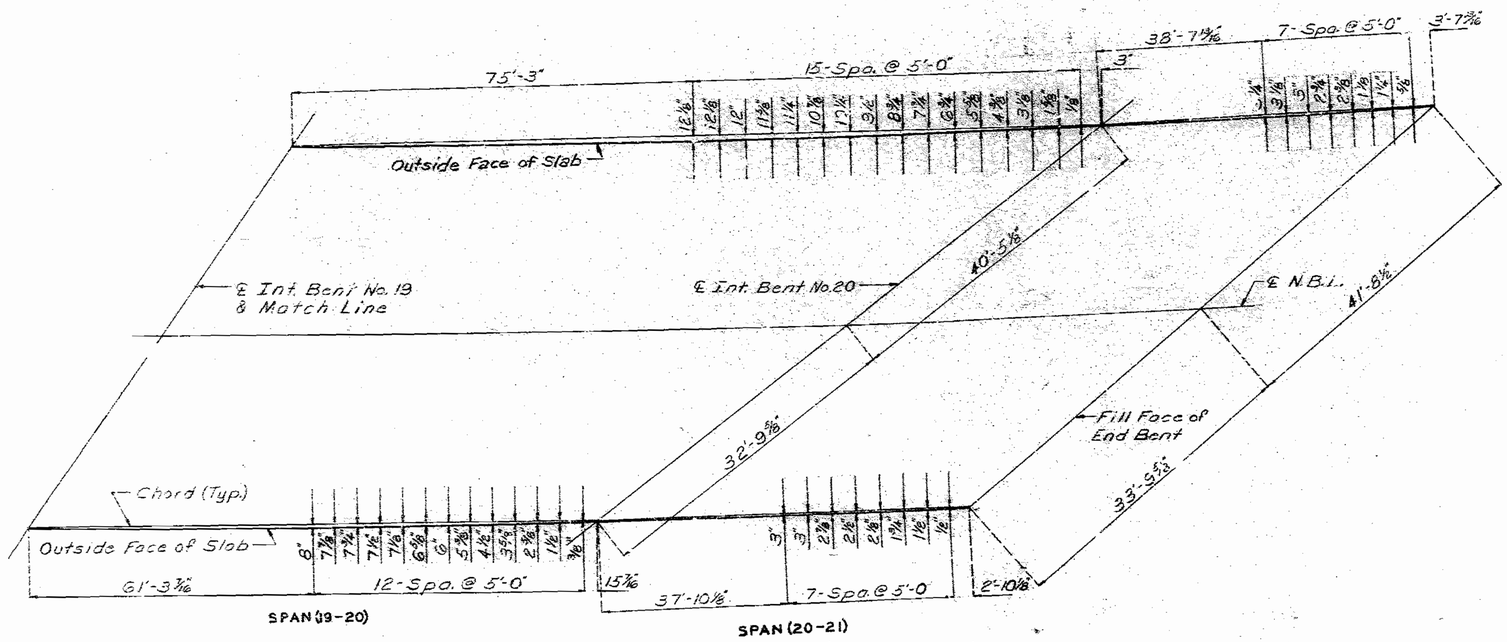

PART PLAN OF SLAB SHOWING CURVE ORDINATES

Note: All dimensions are horizontal.

DETAILED July 1989
CHECKED July 1989

Note: This drawing is not to scale. Follow dimensions.

STATE	PROJ. NO.	SHEET NO.
MO		55

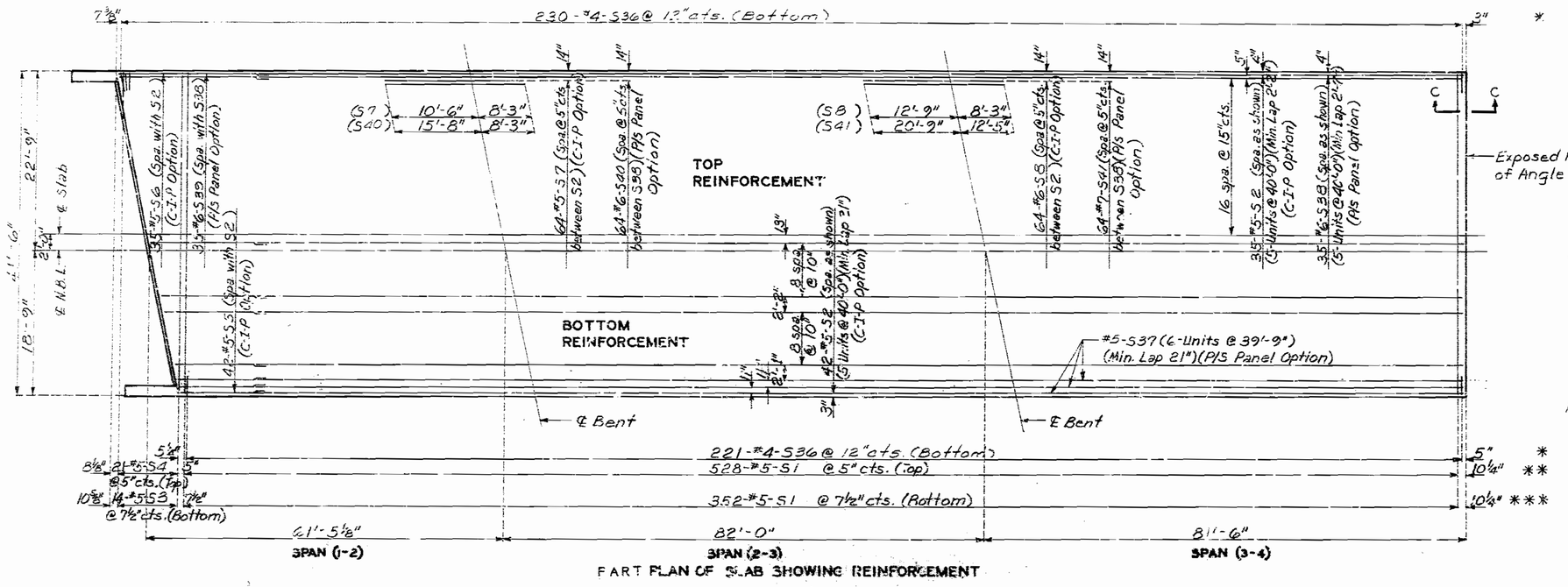

PART PLAN OF SLAB SHOWING REINFORCEMENT

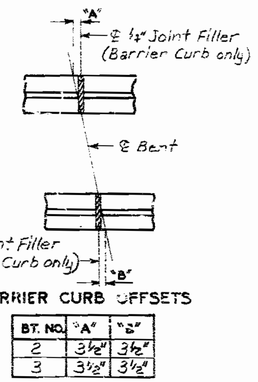

BARRIER CURB OFFSETS

BT. NO.	"A"	"B"
2	3½"	3½"
3	3½"	3½"

Note: For section C-C see Sheet No. 51.

* P/S Panel Option
** All Options
*** C-I-P Option

Note: If the precast prestressed panel option is used, the values shown for the minimum rate of pour may reduced by 25%. However, in no case shall the minimum rate of pour be less than 25 cu. yd/hour.

Note: For details of Prestressed Panel Option, see sheet No. 56.
For details of Slab Drains, see sheet No. 61.
For details of Elastomeric Expansion Device, see sheet No. 56.
For Theoretical Slab Haunching Diagram, see sheet No. 55.
Longitudinal Dimensions are horizontal and are based on a 2½" expansion gap @ 60°F at bent No. 4.

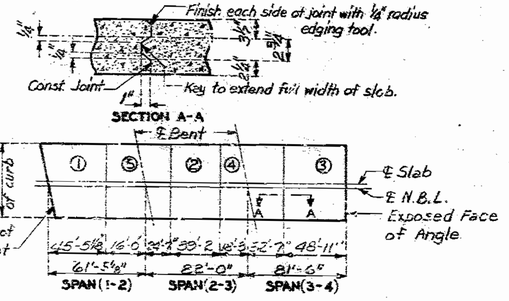

	Sequence of Pours					Minimum Rate of Pour (Cu. Yds./hr.)
	Direction					With Retarder
Basic	1	2	3	4	5	25

Alternate pour: to the basic skip sequence are subject to the approval of the engineer in accordance with section 703.3.12.4 of Missouri Standard Specifications.

Alternate "A" Pours	1	5 + 2	4 + 3	27
	End to 5	1 to 4	2 To End	
Alternate "B" Pours	1 + 5 + 2		4 + 3	27
	End to 4		2 to End	
Alternate "C" Pours	1 + 5 + 2 + 4 + 3			27
	End to End			

The contractor shall furnish an approved retarder to retard the set of the concrete to 2.5 hours and shall pour and satisfactorily finish the slab pours at the rate given above.

SLAB POURING SEQUENCE

Note: This drawing is not to scale. Follow dimensions.

Note: The concrete diaphragm at the int. bents and integral end bent shall be poured a minimum of 30 minutes and a maximum of 2 hours before the slab is poured.
End diaphragms of expansion devices may be poured with a construction joint between the diaphragm and slab, or monolithic with the slab.

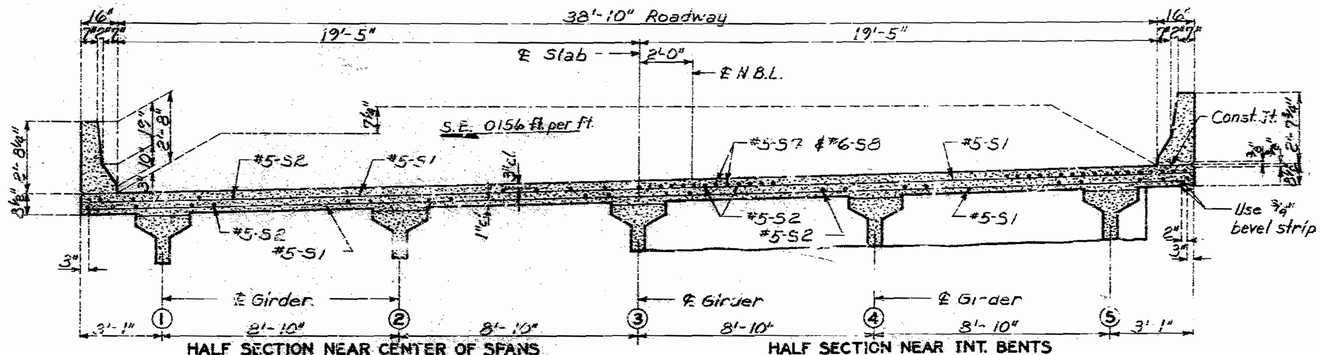

HALF SECTION NEAR CENTER OF SPANS

HALF SECTION NEAR INT. BENTS (C.I.P. OPTION)

Note: For details and reinforcement of safety barrier curb not shown see sheets No. 63 & 65.

DETAILED MAY 1989
CHECKED July 1989

JACKSON COUNTY

A-2733

STATE	PROJ. NO.	SHEET NO.
MO.		56

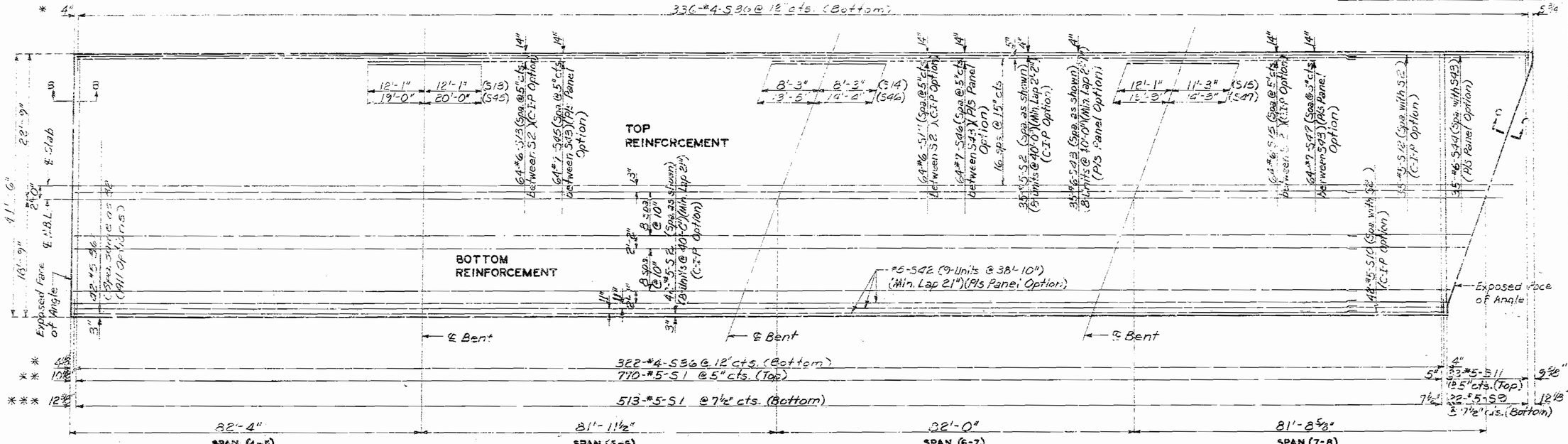

* P/S Panel Option
** All Option
*** C-I-P Option

PLAN OF SLAB SHOWING REINFORCEMENT

Note: If the precast prestressed panel option is used, the values shown for the minimum rate of pour may reduced by 25%. However, in no case shall the minimum rate of pour be less than 25 cu. yd/hour.

Note: For details of Prestressed Panel Option, see sheet No. 56.
For details of Slab Drains, see sheet No. 61.
For details of Elastomeric Exp. Devices, see sh. No. 56 & 57.
For Theoretical Slab Haunching Diagram, see sheet No. 55.
Longitudinal dimensions are horizontal and are based on 2½" Gap @ 60°F at Bent No. 4 and Bent No. 8

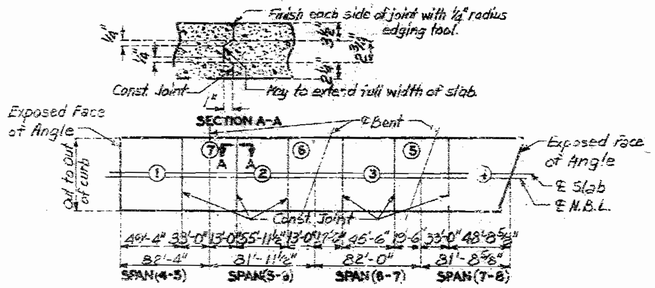

	Sequence of Pours							Minimum Rate of Pour (cubic yards per hour)
	Direction							With Retarder
Basic Sequence	1	2	3	4	5	6	7	25
	Either Direction							
Alternate pours to the basic skip sequence are subject to the approval of the engineer in accordance with section 703.3.12.4 of Missouri Standard Specifications.								
Alternate "A" Pours	1	1 + 2	6 + 3	5 + 4				27
	End to 7	1 to 6	2 to 5	3 to End				
Alternate "B" Pours	1 + 7 + 2	6 + 3	5 + 4					27
	End to 6	2 to 5	3 to End					
Alternate "C" Pours	1 + 7 + 2	6 + 3 + 5 + 4						27
	End to 6	2 to End						
Alternate "D" Pours	1 + 7 + 2 + 6 + 3 + 5 + 4							27
	End to End							

The contractor shall furnish an approved retarder to retard the set of the concrete to 2.5 hours and shall pour and satisfactorily finish the slab pours at the rate given above.

SLAB POURING SEQUENCE

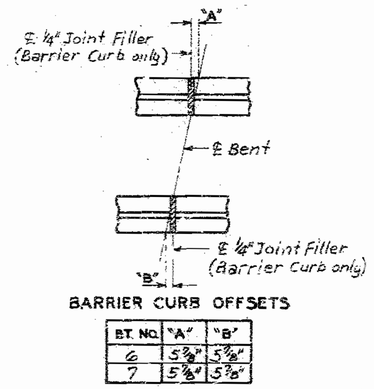

BARRIER CURB OFFSETS

BT. NO.	"A"	"B"
6	5⅜"	5⅜"
7	5⅜"	5⅜"

Note: The concrete diaphragm at the Int. Bents shall be poured a minimum of 30 minutes and a maximum of 2 hours before the slab is poured.
End diaphragms at exp. devices may be poured with a const. jt between the diaphragm and slab, or monolithic with the slab.

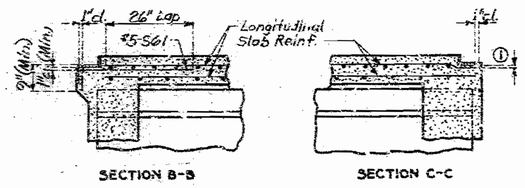

① Field bend to maintain 1" clear minimum.

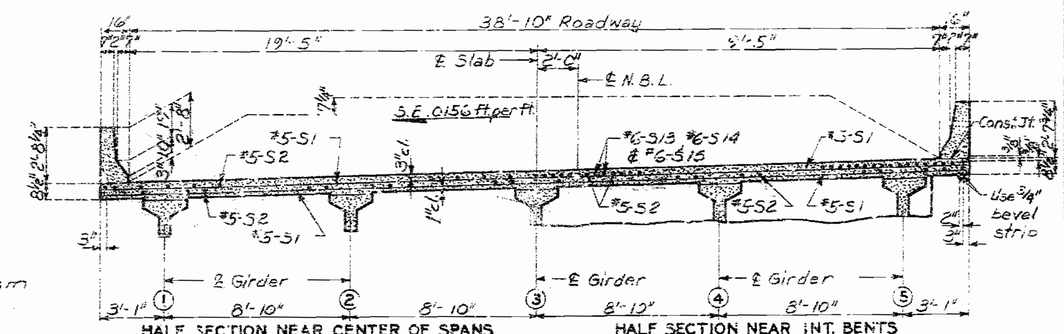

(Col. P. OPTION)

Note: For details and reinforcement of safety barrier curb not shown see sheets No. 63 & 65.

DETAILED MAY 1989
CHECKED JULY 1989

Note: This drawing is not to scale. Follow dimensions.

Sheet No. 51 of 75

JACKSON COUNTY

A-2733

FOR INFORMATION ONLY

Note: For superelevation transition, see sheet No. 44.
For details of Prestressed Panel Option, see sheet No. 56.
For details of Slab Drains, see sheet No. 62.
For details of Elastomeric Exp. Devices, see sheet Nos. 58 and 59.

Note: For Theoretical Slab Haunching Diagram, see sheet No. 55.
Longitudinal dimensions are horizontal and are based on a 2½" Gap @ 60°F at bent No. 8 and a 2" Gap @ 60°F at bent No. 13

STATE	PROJ. NO.	SHEET NO.
MO.		57

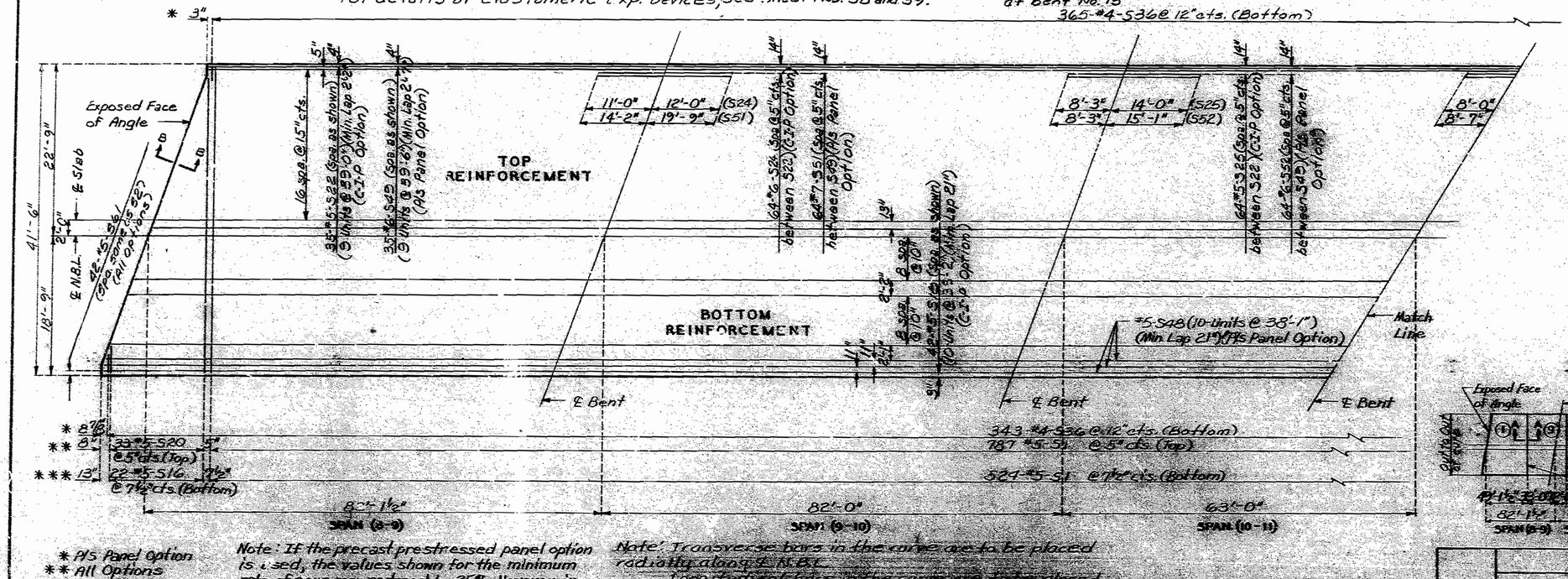

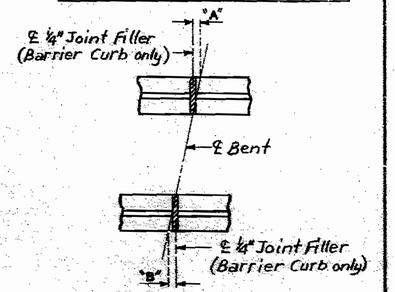

BARRIER CURB OFFSETS

BT. NO.	"A"	"B"
9	5⅜"	5⅜"
10	5⅜"	5⅜"
11	10"	10"
12	15"	14⅜"

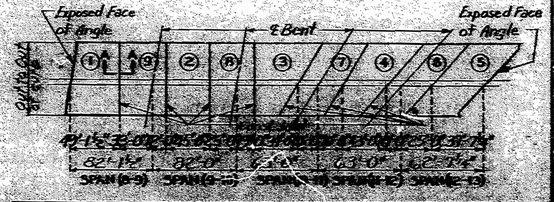

* P/S Panel Option
** All Options
*** C-I-P Option

Note: If the precast prestressed panel option is used, the values shown for the minimum rate of pour may reduced by 25%. However, in no case shall the minimum rate of pour be less than 25 cu. yd/hour.

Note: Transverse bars in the curve are to be placed radially along ℄ N.B.L.
Longitudinal bars in the curve are to be placed parallel to ℄ slab.
For section B-B and section C-C, see Sheet No. 51.

Note: The alternate diaphragms of the 1st bent shall be poured not less than 30 minutes after the adjacent diaphragms. Before the slab is poured.
The diaphragms at expansion devices may be poured without delay, but shall be poured with the slab.

	Sequence of Pours									Minimum Hold Time (Hrs. per Pour)
	Direction									With Diaphragm
Pour Sequence	1	2	3	4	5	6	7	8	9	24
	Either Direction									
Alternate pours to the right and left may be made in the order shown, or in reverse order, when Not Required by the plans.										
Alternate Pours	1st	2 & 1	2 & 3	4 & 3	4 & 5					27
	2nd	1 to 6	2 & 7	3 to 8	3 & End					
Alternate Pours	1 & 2	2 & 3	3 & 4	4 & 5						27
	Exit to R.		2 to 7		3 to End					
Alternate Pours	1 & 2	2 & 3	3 & 4	4 & 5						27
	End to End				3 to End					
Alternate 9 Pours	1	9	2	8	3	7	4	6	5	27
	End to End									

The contractor shall furnish an approved schedule for review of the set of the contract by 2 days and shall pour and schedule only through the slab pours as the sequence allows.

SLAB POURING SEQUENCE

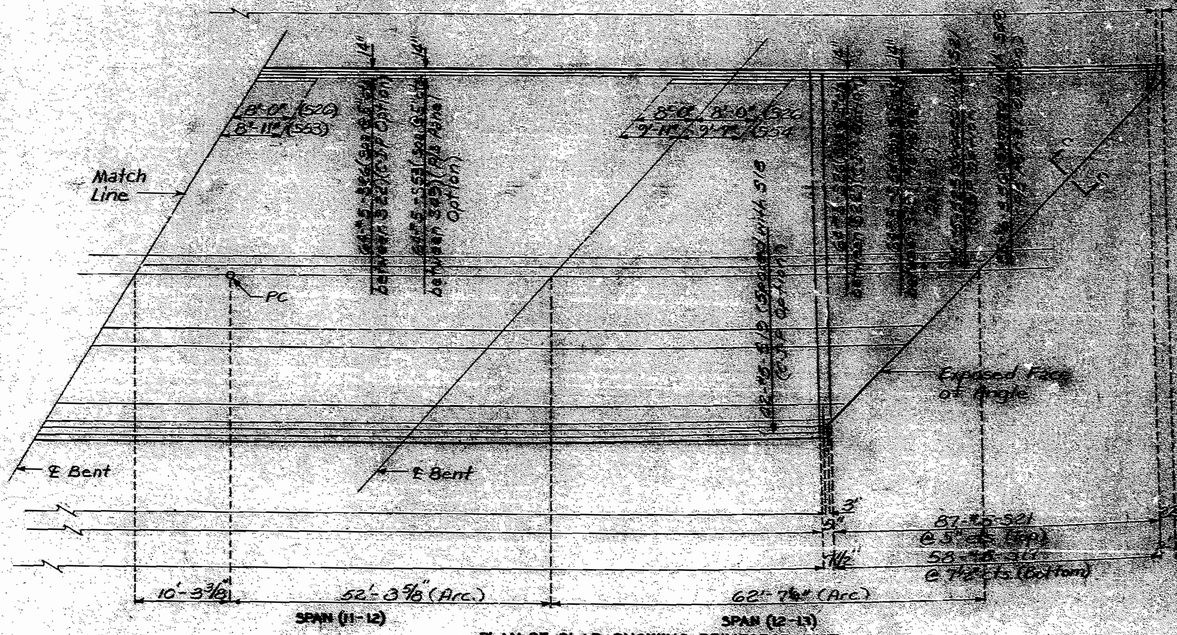

PLAN OF SLAB SHOWING REINFORCEMENT

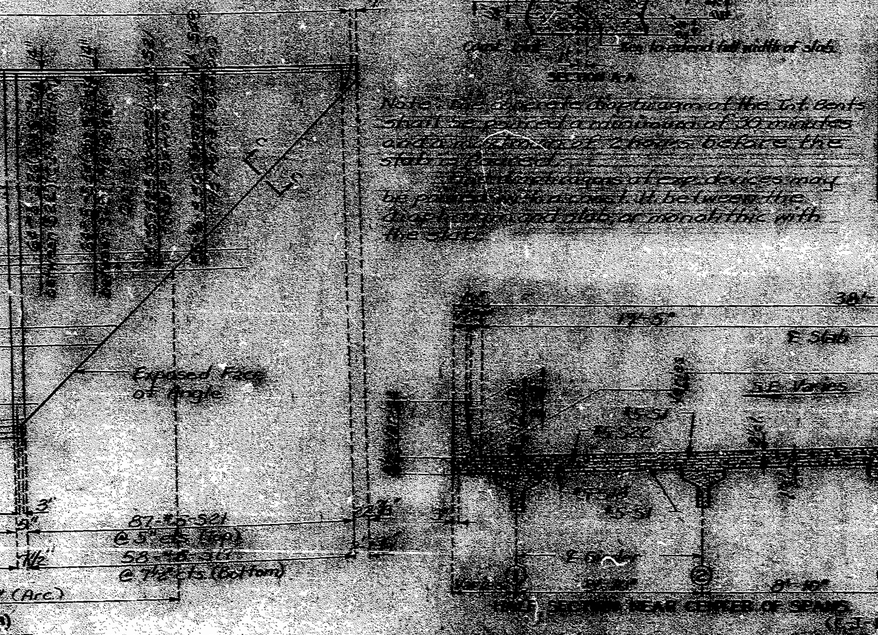

* P/S Panel Option
** All Options
*** C-I-P Option

Note: This drawing is not to scale. Follow dimensions.

DETAILED MAY 1989
CHECKED July 1989

JACKSON COUNTY A-2733

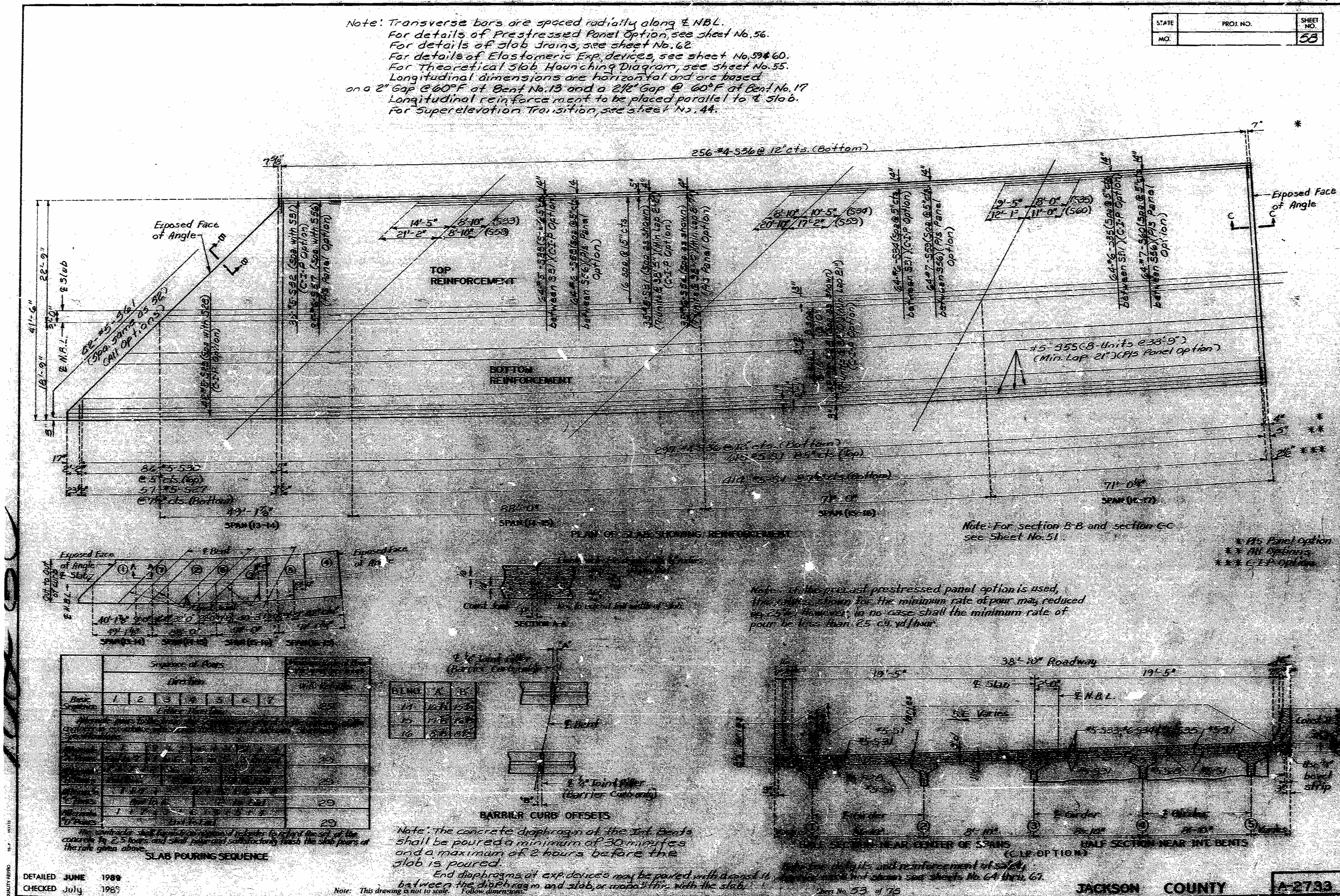
STATE | PROJ. NO. | SHEET NO.
MO. | 58
Note: Transverse bars are spaced radially along ℄ NBL.
For details of Prestressed Panel Option, see sheet No. 56.
For details of slab drains, see sheet No. 62
For details of Elastomeric Exp. devices, see sheet No. 59 & 60.
For Theoretical Slab Haunching Diagram, see sheet No. 55.
Longitudinal dimensions are horizontal and are based
on a 2" Gap @ 60°F at Bent No. 13 and a 2½" Gap @ 60°F at Bent No. 17
Longitudinal reinforcement to be placed parallel to ℄ Slab.
For Superelevation Transition, see sheet No. 44.
256 #4-S36 @ 12" cts. (Bottom)
Exposed Face of Angle
TOP REINFORCEMENT
BOTTOM REINFORCEMENT
#5-S55 (8-Units @ 38'-9") (Min. Lap 21") (P/S Panel Option)
297 #4-S36 @ 12" cts. (Bottom)
615 #5-S1 @ 5" cts. (Top)
414 #5-S1 @ 7½" cts. (Bottom)
86 #5-S30 @ 5" cts. (Top)
57 #5-S27 @ 7½" cts. (Bottom)
49'-1⅞"
SPAN (13-14)
88'-0"
SPAN (14-15)
71'-0"
SPAN (15-16)
71'-0¼"
SPAN (16-17)
PLAN OF SLAB SHOWING REINFORCEMENT
Note: For section B-B and section C-C see Sheet No. 51.
* P/S Panel option
** All Options
*** C.I.P. Option
Note: If the precast prestressed panel option is used, the values shown for the minimum rate of pour may reduced by 25%. However, in no case shall the minimum rate of pour be less than 25 cu. yd./hour.
SECTION A-A
BARRIER CURB OFFSETS
BT. NO. | 'A' | 'B'
14
15
16
Sequence of Pours
Direction
Basic Sequence | 1 | 2 | 3 | 4 | 5 | 6 | 7
The contractor shall furnish an approved retarder to retard the set of the concrete to 2.5 hours and shall pour and satisfactorily finish the slab pours at the rate given above.
SLAB POURING SEQUENCE
Note: The concrete diaphragm at the Int. Bents shall be poured a minimum of 30 minutes and a maximum of 2 hours before the slab is poured.
End diaphragms at exp. devices may be poured with a const. jt. between the diaphragm and slab, or monolithic with the slab.
38'-10" Roadway
19'-5"
℄ Slab
℄ N.B.L.
HALF SECTION NEAR CENTER OF SPANS
HALF SECTION NEAR INT. BENTS
(C.I.P. OPTION)
Use ¾" bevel strip
Note: For details and reinforcement of safety barrier curb not shown see sheets No. 64 thru 67.
DETAILED JUNE 1989
CHECKED July 1989
Note: This drawing is not to scale. Follow dimensions.
Sheet No. 53 of 75
JACKSON COUNTY
A-2733

Note: Transverse bars are spaced radially, along ℄ N.B.L.
Longitudinal reinforcement to be placed parallel to ℄ slab.
Longitudinal dimensions are horizontal and are based on a 2½" Expansion Gap @ 60°F at Bent No 17 and Bent No. 21.

Note: For details of Slab Drains, see sheet No. 63.
For details of Elastomeric Expansion Devices, see sh. No. 60 & 61.
For Theoretical Slab Haunching Diagram, see sheet No. 55.
For section F-F, see sheet No. 46.

STATE	PROJ. NO.	SHEET NO.
MO.		59

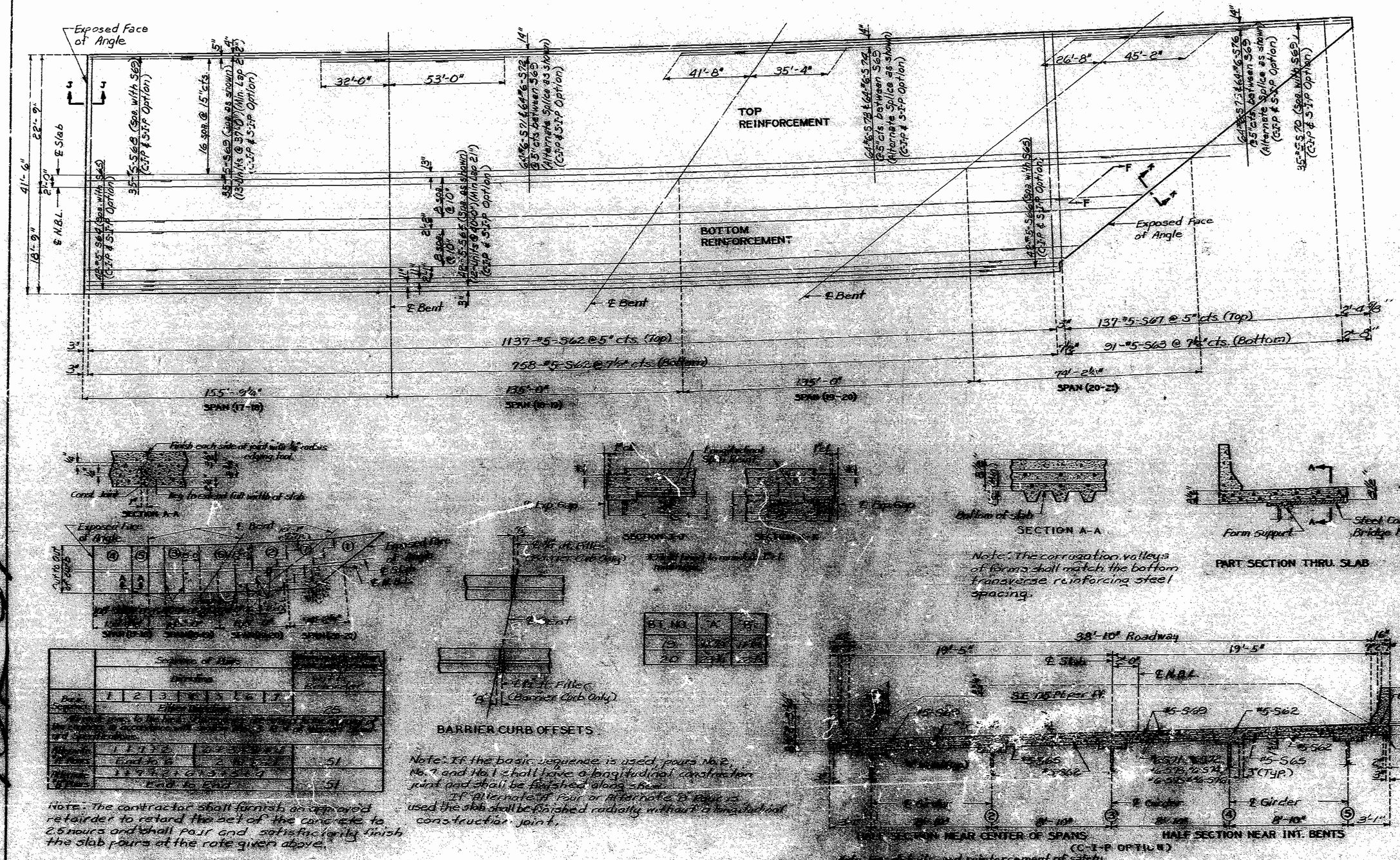

Note: The corrugation valleys of forms shall match the bottom transverse reinforcing steel spacing.

BT. NO.	"A"	"B"
19	[illegible]	[illegible]
20	[illegible]	[illegible]

BARRIER CURB OFFSETS

Note: If the basic sequence is used, pours No. 2, No. 7 and No. 1 shall have a longitudinal construction joint and shall be finished along skew.
If "Alternate A" Pour or Alternate "B" Pour is used the slab shall be finished radially without a longitudinal construction joint.

	Sequence of Pours								
	Direction								With Retarder
Basic Sequence	1	2	3	4	5	6	7		
	Filler Direction								25
Alternate "A" Pours	1 + 7 + 2			6 + 3 + 5 + 4					
	End to 6			2 + 5 + 4					51
Alternate "B" Pours	1 + 7 + 2 + 6 + 3 + 5 + 4								
	End to End								51

Note: The contractor shall furnish an approved retairder to retard the set of the concrete to 2.5 hours and shall pour and satisfactorily finish the slab pours at the rate given above.

SLAB POURING SEQUENCE

Note: For details and reinforcement of safety barrier curb not shown see sheets No 65 & 67

DETAILED JUNE 1989
CHECKED July 1989

Note: This drawing is not to scale. Follow dimensions.

Sheet No. 54 of 75

JACKSON COUNTY A-2733

STATE	PROJ. NO.	SHEET NO.
MO.		60

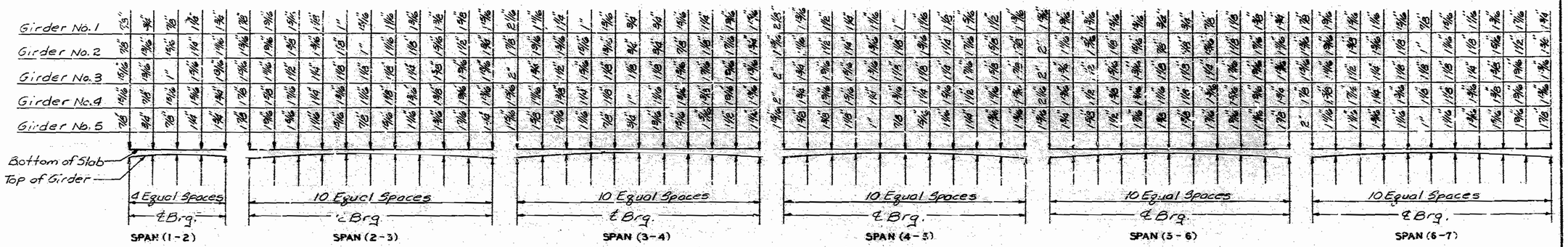

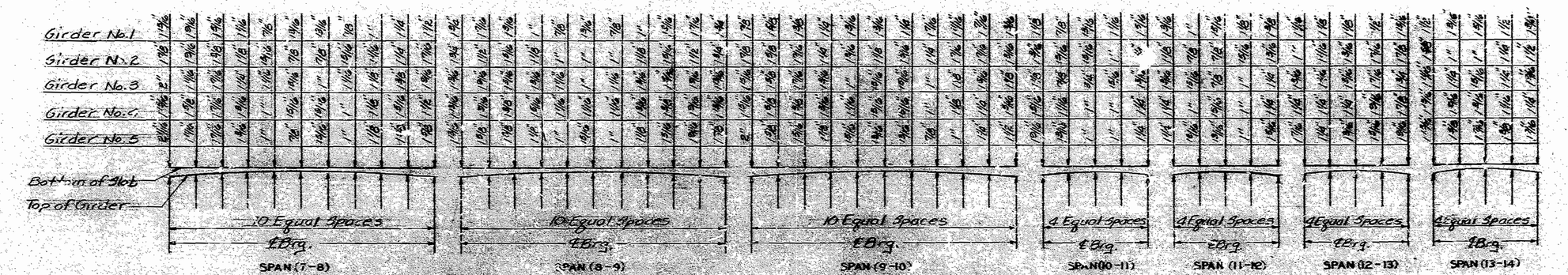

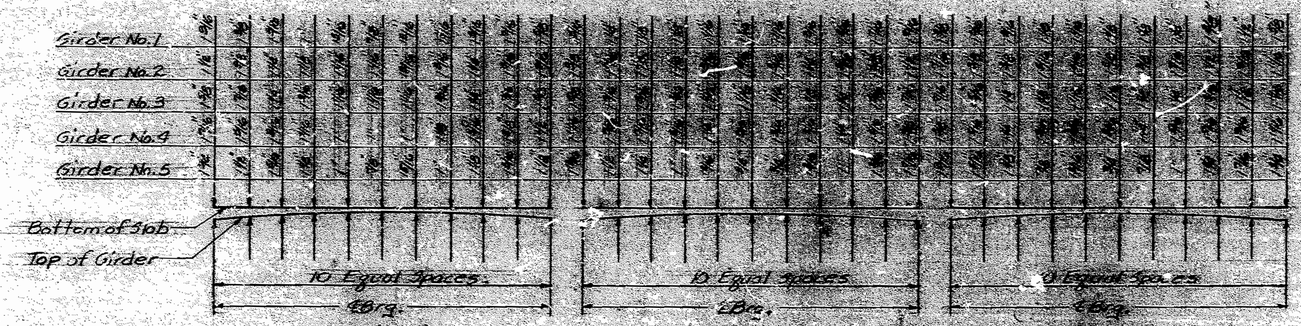

THEORETICAL SLAB HAUNCHING DIAGRAM
(PRESTRESSED I-GIRDER SPANS)

Note: If girder camber is different from that shown in the Prestressed I-Girder Camber Diagram, it shall be necessary to adjust the slab haunches, increase the slab thickness or to raise the grade uniformly throughout the structure. No payment will be made for additional labor or materials required for variation in haunching, slab thickness or grade adjustment.

Concrete in the haunches is included in the Estimated Quantities for Alternate Slabs as Class B2 concrete.

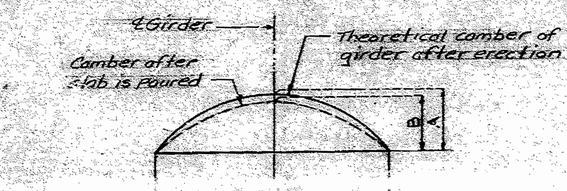

PRESTRESSED I-GIRDER CAMBER DIAGRAM

Conversion factors for girder camber:

0.1 pt. = 0.314 × 0.5 pt. } Span (2-3) thru Span (9-10) & Span (14-15 thru Span (16-17)
0.2 pt. = 0.593 × 0.5 pt.
0.3 pt. = 0.810 × 0.5 pt.
0.4 pt. = 0.952 × 0.5 pt.

0.25 pt. = 0.7125 × 0.5 pt. Span (1-2) & Span (10-11) thru Span (13-14)

TABLE OF DIMENSIONS FOR CAMBER

SPAN	1-2		2-3		3-4		4-5		5-6		6-7		7-8		8-9		9-10		10-11		11-12		12-13		13-14		14-15		15-16		16-17	
LOCATION	A	B	A	B	A	B	A	B	A	B	A	B	A	B	A	B	A	B	A	B	A	B	A	B	A	B	A	B	A	B	A	B
Girder No. 1	5/8	3/4	1 1/8	1 3/8	1 3/8	1 7/8	1 1/8	1 3/8	1 3/8	1 7/8	1 1/8	1 3/8	1 3/8	1 7/8	1 1/8	1 3/8	1 3/8	1 7/8	1 1/8	1 3/8	1 3/8	1 7/8	1 1/8	1 3/8	1 3/8	1 7/8	1 1/8	1 3/8	1 3/8	1 7/8	1 1/8	1 3/8	1 3/8	1 7/8
Girder No. 2	3/4	7/8	1 3/8	1 5/8	1 5/8	2 1/8	1 3/8	1 5/8	1 5/8	2 1/8	1 3/8	1 5/8	1 5/8	2 1/8	1 3/8	1 5/8	1 5/8	2 1/8	1 3/8	1 5/8	1 5/8	2 1/8	1 3/8	1 5/8	1 5/8	2 1/8	1 3/8	1 5/8	1 5/8	2 1/8	1 3/8	1 5/8	1 5/8	2 1/8
Girder No. 3	7/8	1	1 5/8	1 7/8	1 7/8	2 3/8	1 5/8	1 7/8	1 7/8	2 3/8	1 5/8	1 7/8	1 7/8	2 3/8	1 5/8	1 7/8	1 7/8	2 3/8	1 5/8	1 7/8	1 7/8	2 3/8	1 5/8	1 7/8	1 7/8	2 3/8	1 5/8	1 7/8	1 7/8	2 3/8	1 5/8	1 7/8	1 7/8	2 3/8
Girder No. 4	1	1 1/8	1 7/8	2 1/8	2 1/8	2 5/8	1 7/8	2 1/8	2 1/8	2 5/8	1 7/8	2 1/8	2 1/8	2 5/8	1 7/8	2 1/8	2 1/8	2 5/8	1 7/8	2 1/8	2 1/8	2 5/8	1 7/8	2 1/8	2 1/8	2 5/8	1 7/8	2 1/8	2 1/8	2 5/8	1 7/8	2 1/8	2 1/8	2 5/8
Girder No. 5	1 1/8	1 1/4	2 1/8	2 3/8	2 3/8	2 7/8	2 1/8	2 3/8	2 3/8	2 7/8	2 1/8	2 3/8	2 3/8	2 7/8	2 1/8	2 3/8	2 3/8	2 7/8	2 1/8	2 3/8	2 3/8	2 7/8	2 1/8	2 3/8	2 3/8	2 7/8	2 1/8	2 3/8	2 3/8	2 7/8	2 1/8	2 3/8	2 3/8	2 7/8

DETAILED APRIL 1989
CHECKED July 1989

Note: This drawing is not to scale. Follow dimensions.

Sheet No. 55 of 75

JACKSON COUNTY A-2733

STATE	PROJ. NO.	SHEET NO.
MO.		61

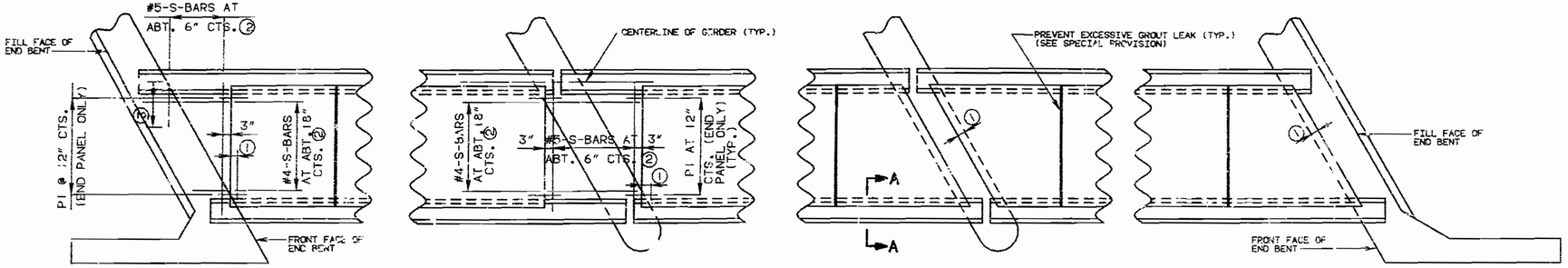

PANELS - SQUARED ENDS

PANELS - SKEWED ENDS

PLAN OF PRECAST PRESTRESSED PANELS PLACEMENT

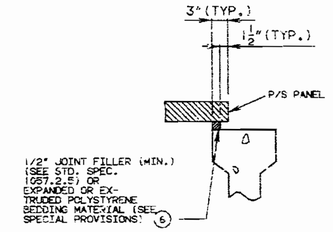

SECTION A-A

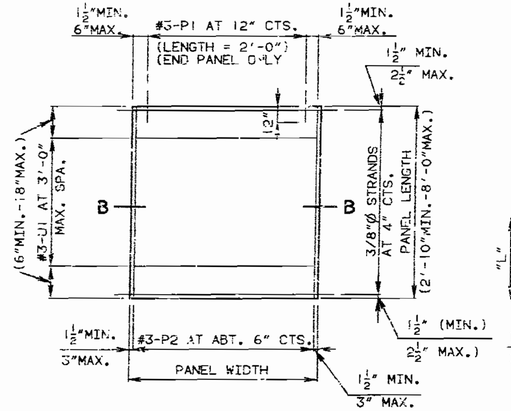

PLAN OF PRECAST PRESTRESSED PANEL

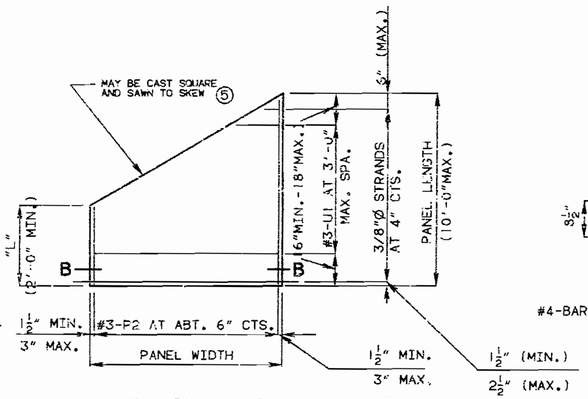

PLAN OF PRECAST PRESTRESSED PANEL (SKEWED END-OPTIONAL)

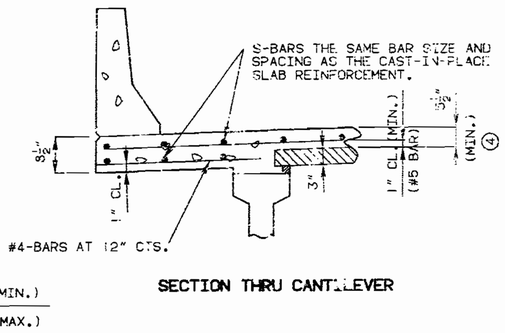

SECTION THRU CANTILEVER

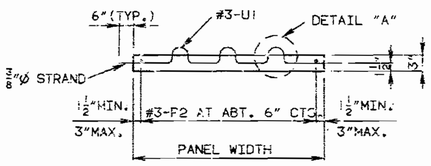

SECTION B-B

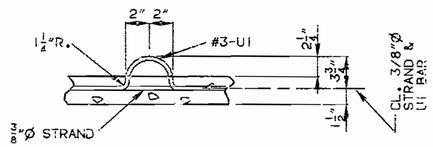

BENDING DIAGRAM FOR U1 BAR

#3-U1 BARS MAY BE ORIENTED AT RIGHT ANGLES TO LOCATION AND SPACING SHOWN. U1 BARS SHALL BE PLACED BETWEEN P1 BARS.

DETAIL "A"

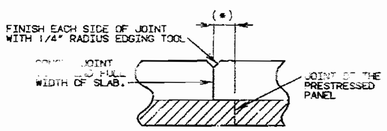

PERMISSIBLE CONST. JOINT

(*) ADJUST THE PERMISSIBLE CONST. JOINT TO A CLEARANCE OF 6 INCHES MIN. FROM THE JOINTS OF THE PRESTRESSED PANELS.

NOTE:

1. END PANELS SHALL BE DIMENSIONED 1-1/2 INCHES FROM THE INSIDE FACE OF DIAPHRAGM.
2. S-BARS SHOWN ARE BOTTOM STEEL IN SLAB BETWEEN PANELS AND USED WITH SQUARED END PANELS ONLY.

COST OF S-BARS SHALL BE INCLUDED IN THE PRICE BID FOR SLAB PER SQ. YD.

S-BARS ARE NOT LISTED IN BILL OF REINFORCING.

SUPPORT FROM DIAPHRAGM FORMS IS REQUIRED UNDER THE OPTIONAL SKEWED END UNTIL CAST-IN-PLACE CONCRETE HAS REACHED 3,000 PSI COMPRESSIVE STRENGTH.

3. EXTEND S-BARS 18 INCHES BEYOND THE FRONT FACE OF END BENT ONLY.

SLAB EXTERIOR GIRDER HAUNCH SHALL BE THE SAME AS CAST-IN-PLACE.

SLAB THICKNESS OVER PRESTRESSED PANELS VARIES DUE TO GIRDER CAMBER.

4. IN ORDER TO MAINTAIN MINIMUM SLAB THICKNESS IT MAY BE NECESSARY TO RAISE THE GRADE UNIFORMLY THROUGHOUT THE STRUCTURE. NO PAYMENT WILL BE MADE FOR ADDITIONAL LABOR OR MATERIAL REQUIRED FOR NECESSARY GRADE ADJUSTMENT.
5. ANY STRAND 2'-0" OR SHORTER SHALL HAVE A #4 REINFORCING BAR ON EACH SIDE OF IT, CENTERED BETWEEN STRANDS. STRANDS 2'-0" OR SHORTER MAY THEN BE DEBONDED AT THE FABRICATORS OPTION.
6. ALL PANEL SUPPORT PADS SHALL BE GLUED TO THE GIRDER. WHEN SUPPORT THICKNESS EXCEEDS 1-1/2 INCHES, THE PADS SHALL BE GLUED TOP AND BOTTOM. THE GLUE USED SHALL BE THE TYPE RECOMMENDED BY THE PANEL SUPPORT PADS MANUFACTURER.

NOTE:

USE SLAB HAUNCHING DIAGRAM ON SHEET NO. 55 FOR DETERMINING THICKNESS OF JOINT FILLER OR POLYSTYRENE BEDDING MATERIAL WITHIN THE LIMITS NOTED BELOW.

GENERAL NOTES:

PRESTRESSED PANELS:

CONCRETE FOR PRESTRESSED PANELS SHALL BE CLASS A1 WITH F'C = 5,000 PSI, F'CI = 3,500 PSI.

THE TOP SURFACE OF ALL PANELS SHALL RECEIVE A SCORED FINISH WITH A DEPTH OF SCORING OF 1/8 INCH PERPENDICULAR TO THE PRESTRESSING STRANDS IN THE PANELS (SEE SPECIAL PROVISIONS).

PRESTRESSING TENDONS SHALL BE HIGH-TENSILE STRENGTH UNCOATED SEVEN-WIRE (7), LOW-RELAXATION STRANDS FOR PRESTRESSED CONCRETE CONFORMING TO AASHTO M203. EXCEPT THAT NOMINAL DIAMETER OF STRAND = 3/8 INCH AND NOMINAL AREA = 0.085 SQ. IN. AND MINIMUM ULTIMATE STRENGTH = 23,000 LBS. (270 KSI). LARGER STRANDS MAY BE USED WITH THE SAME SPACING AND INITIAL TENSION.

INITIAL PRESTRESSING FORCE = 14.9 KIPS/STRAND.

THE METHOD AND SEQUENCE OF RELEASING THE STRANDS SHALL BE SHOWN ON THE SHOP DRAWINGS.

SUITABLE ANCHORAGE DEVICES FOR LIFTING PANELS MAY BE CAST IN PANELS, PROVIDED THEY ARE SHOWN ON THE SHOP DRAWINGS AND APPROVED BY THE ENGINEER. PANEL LENGTHS SHALL BE DETERMINED BY THE CONTRACTOR AND SHOWN ON THE SHOP DRAWINGS.

WHEN SQUARE END PANELS ARE USED AT SKEWED BENTS, IT IS REQUIRED THAT THE SKEWED PORTION BE CAST FULL DEPTH. NO SEPARATE PAYMENT WILL BE MADE FOR THE ADDITIONAL CONCRETE AND REINFORCING REQUIRED.

MINIMUM JOINT FILLER OR POLYSTYRENE BEDDING MATERIAL THICKNESS SHALL BE 1/2 INCH. THICKER JOINT FILLER OR POLYSTYRENE BEDDING MATERIAL MAY BE USED ON ONE OR BOTH SIDES OF THE GIRDER TO REDUCE CAST-IN-PLACE CONCRETE THICKNESS, WITHIN TOLERANCES. NO MORE THAN 2 INCHES TOTAL THICKNESS OF JOINT FILLER OR POLYSTYRENE BEDDING MATERIAL SHALL BE USED.

THE SAME THICKNESS OF JOINT FILLER MATERIAL SHALL BE USED UNDER ANY ONE EDGE OF ANY PANEL AND THE MAXIMUM CHANGE IN THICKNESS BETWEEN ADJACENT PANELS SHALL BE 1/4 INCH. THE POLYSTYRENE BEDDING MATERIAL MAY BE CUT TO MATCH HAUNCH HEIGHT ABOVE TOP OF FLANGE.

AT THE CONTRACTORS OPTION, THE VARIATION IN SLAB THICKNESS OVER PRESTRESSED PANELS MAY BE ELIMINATED OR REDUCED BY INCREASING AND VARYING THE GIRDER TOP FLANGE THICKNESS. DIMENSIONS SHALL BE SHOWN ON THE SHOP DRAWINGS.

REINFORCING STEEL:

ALL DIMENSIONS ARE OUT TO OUT.

MINIMUM CLEARANCE TO REINFORCING STEEL SHALL BE 1-1/2 INCH, UNLESS OTHERWISE SHOWN.

HOOKS AND BENDS SHALL BE IN ACCORDANCE WITH THE C.R.S.I. MANUAL OF STANDARD PRACTICE FOR DETAILING REINFORCED CONCRETE STRUCTURES, STIRRUP AND TIE DIMENSIONS.

ACTUAL LENGTH OF BAR SHALL BE ALONG CENTERLINE OF BAR TO THE NEAREST INCH.

THE PRESTRESSED PANEL QUANTITIES ARE NOT INCLUDED IN THE TABLE OF ESTIMATED QUANTITIES FOR ALTERNATE SLABS.

IF U1 BARS INTERFERE WITH PLACEMENT OF SLAB STEEL, U1 LOOPS MAY BE BENT OVER, AS NECESSARY, TO CLEAR SLAB STEEL.

WELDED WIRE FABRIC OR WELDED DEFORMED BAR MATS PROVIDING A MINIMUM AREA OF REINFORCING PERPENDICULAR TO STRANDS OF 0.22 SQ. IN./FT., WITH SPACING PARALLEL TO STRANDS SUFFICIENT TO INSURE PROPER HANDLING, MAY BE USED IN LIEU OF THE #3-P2 BARS SHOWN. WIRE OR BAR DIAMETER SHALL NOT BE LARGER THAN 0.375 INCHES.

DETAILS OF PRECAST PRESTRESSED PANELS

DETAILED JULY 1989
CHECKED JULY 1989

NOTE: THIS DRAWING IS NOT TO SCALE. FOLLOW DIMENSIONS.

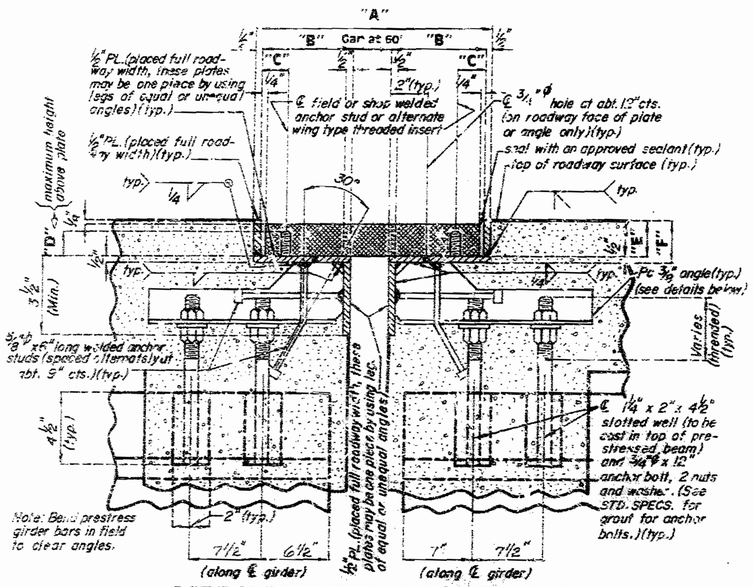

PART SECTION THRU ARMORED JOINT

TABLE OF DIMENSIONS										
LOCATION	ACCEPTABLE ALTERNATE TYPES	EXP. GAP AT 60°	"A" AT 60°	"B"	"C"	"D"	"E"	"F"	ANCHOR STUDS SIZE	"A"	"G"
Bt. #4	On-Flex 45	2 1/16"	11 3/16"	4 1/16"	1 5/16"	1 1/16"	2 3/16"	3 1/16"	5/8"	12"	65
	Wabo Bendoflex 450	2 1/2"	12"	4 1/16"	1 5/16"	1 1/16"	2 3/16"	3 1/16"	1/2"	12"	50
	Fel-Span TA40 A CE	2 1/16"	12 1/16"	4 1/2"	1 5/16"	1 1/2"	2 1/16"	3 1/16"	1/2"	12"	60
	Acme Trojan TR400	2 1/2"	12"	4 1/16"	1 3/16"	1 1/16"	1 3/16"	2 1/16"	1/2"	12"	40
	Delastiflex Lm 400	2 1/2"	12 1/16"	4 1/16"	2 3/16"	7/8"	2"	2 1/16"	1/2"	9"	45
	Gen-Strip CCL 1"	2 1/16"	12"	4 1/16"	1 3/16"	1 1/16"	1 3/16"	2 1/16"	5/8"	12"	65

NOTES: ALL DIMENSIONS ARE AT RIGHT ANGLES.
EXPANSION GAP AND DIMENSION "A" SHALL BE INCREASED 1/16" FOR EACH 10° FALL IN TEMPERATURE AND DECREASED 1/16" FOR EACH 10° RISE IN TEMPERATURE.

GENERAL NOTES:

THE CERTIFIED NUTS AND BOLTS FOR THE ANCHOR STUDS OR WING TYPE THREADED INSERTS SHALL BE TIGHTENED TO THE FOOT POUNDS "G" SPECIFIED IN THE TABLE OF DIMENSIONS. RETIGHTEN TO "G" FOOT POUNDS A MINIMUM OF 30 MINUTES AFTER INITIAL TIGHTENING. THE WELDED ANCHOR STUDS SHALL BE THE REDUCED BASE TYPE.

MATERIAL FOR THE ARMORED JOINT SHALL BE A36 STRUCTURAL GRADE STEEL. ANCHORS FOR THE ARMORED JOINT SHALL BE APPROVED STUD WELDED ANCHORS (C1010 THRU C1020).

SEE SPECIAL PROVISIONS FOR PAINTING.

ANCHOR BOLTS IN THE BARRIER CURB SHALL BE CAST-IN-PLACE, GROUTED OR CONE-EXPANSION TYPE. HOLES IN THE BARRIER CURB FOR ANCHORS SHALL NOT BE DRILLED UNTIL THE CONCRETE IS AT LEAST 7 DAYS OLD.

PLAN DIMENSIONS ARE BASED ON INSTALLATION AT 60°F. THE EXPANSION GAP AND OTHER DIMENSIONS SHALL BE ADJUSTED DURING INSTALLATION FOR COMPLIANCE WITH ANY TEMPERATURE CHANGE.

CONTACT SURFACE OF STEEL TO ALUMINUM SHALL BE INSULATED WITH THE MATERIAL SPECIFIED ON THE SHOP DRAWINGS.

FURNISHING, PAINTING AND INSTALLING THE STRUCTURAL STEEL ARMORED JOINT AND CURB PLATES SHALL BE INCLUDED IN THE CONTRACT UNIT PRICE FOR ELASTOMERIC EXPANSION JOINT SEAL.

BOLT CAVITIES TO BE FILLED WITH APPROVED SEALANT IN COMPLIANCE WITH MANUFACTURER'S CERTIFICATION.

STATE	PROJ. NO.	SHEET NO.
MO.		62

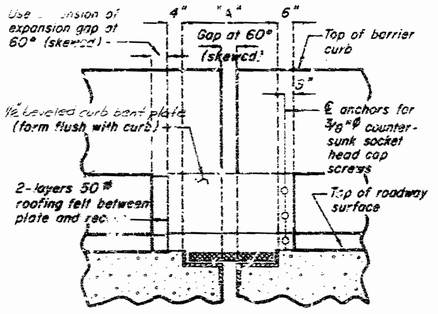

PART ELEVATION OF BARRIER CURB

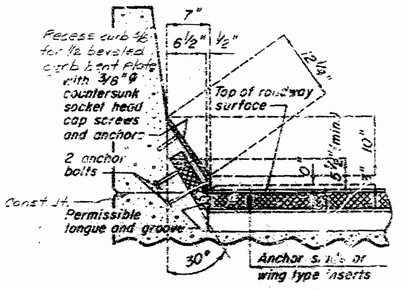

TYPE "A" CURB

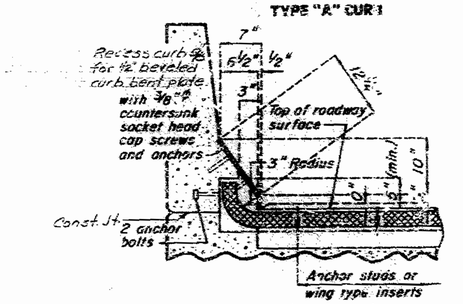

TYPE "B" CURB

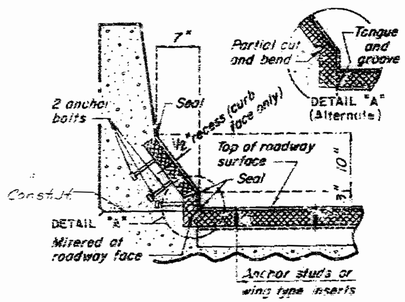

TYPE "C" CURB

ALTERNATE CURB TREATMENTS

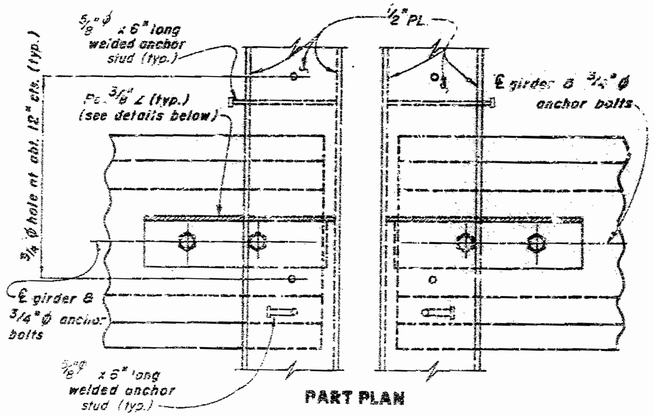

PART PLAN

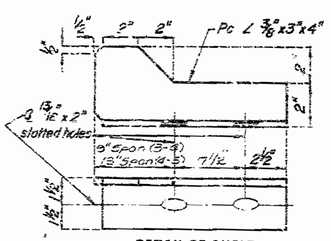

DETAIL OF ANGLE

Note: Angles placed at each girder.

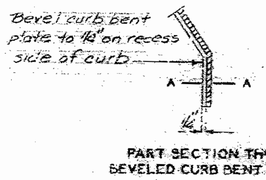

PART SECTION THRU BEVELED CURB BENT PLATE.

SECTION A-A

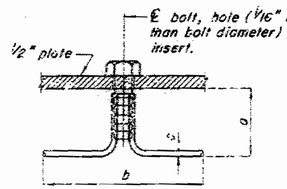

BOLT DIAMETER	SA. LOAD TENSION (LBS.) (MIN.)	APPROX. ULT. CAP. TENSION (LBS.) (MIN.)	DIMENSIONS a (MIN.)	b	c
1/2"	800	8,000	1 5/8"	5"	.218"
5/8"	1,300	9,200	1-5/8"	5"	.218"
3/4"	1,900	12,200	2-1/4"	6"	.254"
7/8"	2,600	16,200	2-1/2"	6-1/2"	.305"
1"	2,600	16,200	2-1/2"	6-1/2"	.305"

DETAILS OF ALTERNATE WING TYPE THREADED INSERT

(MACHINE BOLTS NEED ONLY BE USED TO SECURE THE WING TYPE THREADED INSERTS TO THE STEEL PLATE UNTIL THE CONCRETE HAS ATTAINED 3,000 p.s.i.)

DETAILS OF ELASTOMERIC EXPANSION JOINT SEAL AT BENT NO. 4

DETAILED MAY 1988
CHECKED JULY 1988

Note: This drawing is not to scale. Follow dimensions.

Sheet No. 57 of 75

JACKSON COUNTY

A-2733

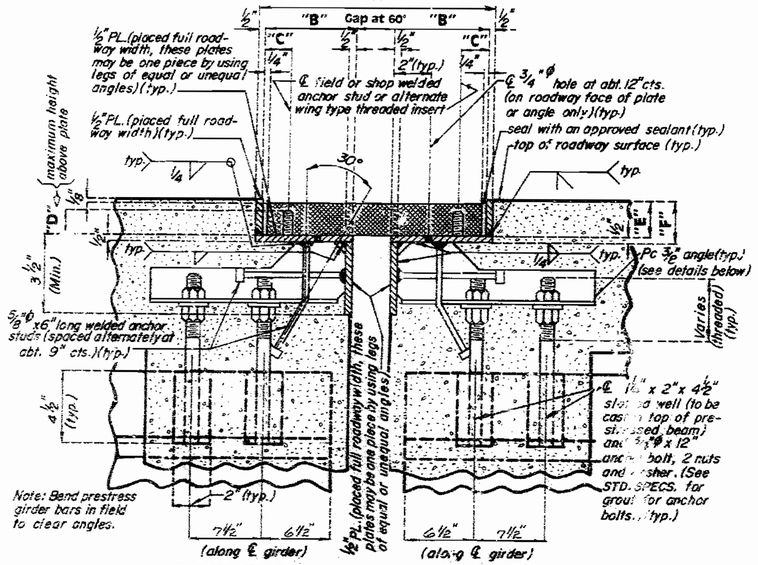

PART SECTION THRU ARMORED JOINT

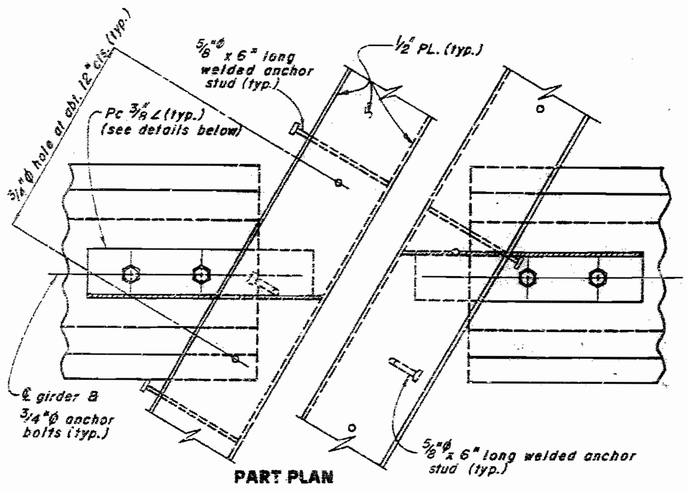

PART PLAN

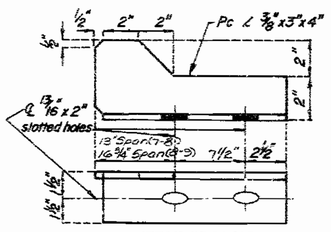

DETAIL OF ANGLE

Note: Angles placed at each girder.

TABLE OF DIMENSIONS

LOCATION	ACCEPTABLE ALTERNATE TYPES	EXP. GAP AT 60°	"A" AT 60°	"B"	"C"	"D"	"E"	"F"	ANCHOR STUDS SIZE	ANCHOR STUDS SPA.	ANCHOR STUDS "C"
Bt. "8	On-Flex 45	2 1/4"	11 3/4"	4 1/4"	1 5/16"	1 1/2"	2 3/4"	3 1/4"	5/8"	12"	65
	Wabo Bendoflex 450	2 1/2"	12"	4 1/4"	1 5/8"	1 1/4"	2 3/4"	3 1/4"	1/2"	12"	50
	Fel-Span TROA C5	2 1/4"	12 1/4"	4 1/2"	1 5/8"	1 1/2"	2 1/4"	2 3/4"	1/2"	12"	50
	Acme Trojon TR400	2 1/2"	12"	4 1/4"	1 3/4"	1 1/8"	1 3/4"	2 1/4"	1/2"	12"	40
	Delastiflex LM 400	2 1/2"	12 7/8"	4 11/16"	2 9/16"	7/8"	2"	2 1/2"	1/2"	9"	45
	Gen-Strip CCL 4"	2 1/2"	12"	4 1/4"	1 3/4"	1 1/8"	1 3/4"	2 1/4"	5/8"	12"	65

NOTE: ALL DIMENSIONS ARE AT RIGHT ANGLES.
EXPANSION GAP AND DIMENSION "A" SHALL BE INCREASED 1/4" FOR EACH 10° FALL IN TEMPERATURE AND DECREASED 1/4" FOR EACH 10° RISE IN TEMPERATURE.

GENERAL NOTES:

THE CERTIFIED NUTS AND BOLTS FOR THE ANCHOR STUDS OR WING TYPE THREADED INSERTS SHALL BE TIGHTENED TO THE FOOT POUNDS "G" SPECIFIED IN THE TABLE OF DIMENSIONS. RETIGHTEN TO "G" FOOT POUNDS A MINIMUM OF 30 MINUTES AFTER INITIAL TIGHTENING. THE WELDED ANCHOR STUDS SHALL BE THE REDUCED BASE TYPE

MATERIAL FOR THE ARMORED JOINT SHALL BE A36 STRUCTURAL GRADE STEEL. ANCHORS FOR THE ARMORED JOINT SHALL BE APPROVED STUD WELDED ANCHORS (C1010 THRU C1020).

SEE SPECIAL PROVISIONS FOR PAINTING.

ANCHOR BOLTS IN THE BARRIER CURB SHALL BE CAST-IN-PLACE, GROUTED OR CONE-EXPANSION TYPE. HOLES IN THE BARRIER CURB FOR ANCHORS SHALL NOT BE DRILLED UNTIL THE CONCRETE IS AT LEAST 7 DAYS OLD

PLAN DIMENSIONS ARE BASED ON INSTALLATION AT 60°F. THE EXPANSION GAP AND OTHER DIMENSIONS SHALL BE ADJUSTED DURING INSTALLATION FOR COMPLIANCE WITH ANY TEMPERATURE CHANGE.

CONTACT SURFACE OF STEEL TO ALUMINUM SHALL BE INSULATED WITH THE MATERIAL SPECIFIED ON THE SHOP DRAWINGS.

FURNISHING, PAINTING AND INSTALLING THE STRUCTURAL STEEL ARMORED JOINT AND CURB PLATES SHALL BE INCLUDED IN THE CONTRACT UNIT PRICE FOR ELASTOMERIC EXPANSION JOINT SEAL.

BOLT CAVITIES TO BE FILLED WITH APPROVED SEALANT IN COMPLIANCE WITH MANUFACTURER'S CERTIFICATION.

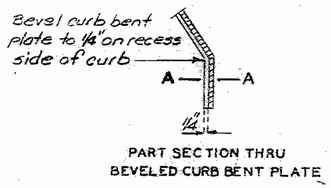

PART SECTION THRU BEVELED CURB BENT PLATE

SECTION A-A

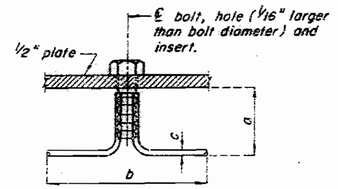

BOLT DIAMETER	SAFE LOAD TENSION (LBS.) (MIN.)	APPROX. ULT. CAP. TENSION (LBS., (MIN.)	DIMENSIONS a (MIN.)	b	c
1/2"	800	8,000	1-5/8"	5"	.218"
5/8"	1,300	9,200	1-5/8"	5"	.218"
3/4"	1,800	13,200	2-1/4"	6"	.262"
7/8"	2,000	16,200	2-1/2"	6-1/2"	.306"
1"	2,000	16,200	2-1/2"	6-1/2"	.306"

DETAILS OF ALTERNATE WING TYPE THREADED INSERT

(MACHINE BOLTS NEED ONLY BE USED TO SECURE THE WING TYPE THREADED INSERTS TO THE STEEL PLATE UNTIL THE CONCRETE HAS ATTAINED 3,000 p.s.i.)

STATE	PROJ. NO	SHEET NO
MO		63

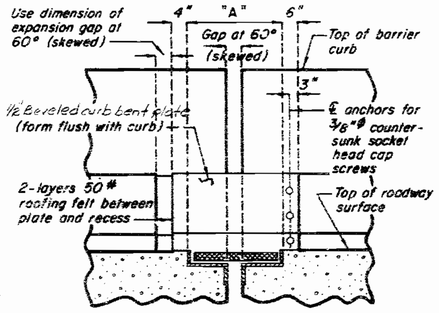

PART ELEVATION OF BARRIER CURB

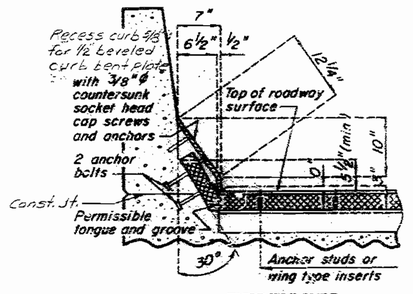

TYPE "A" CURB

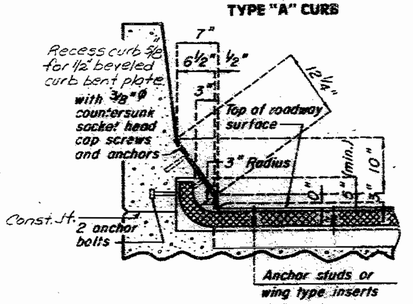

TYPE "B" CURB

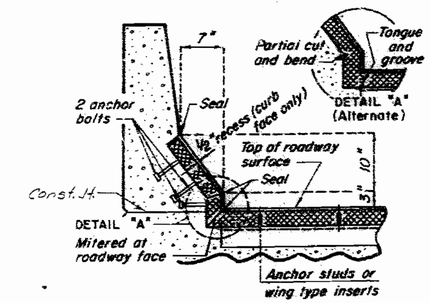

TYPE "C" CURB

ALTERNATE CURB TREATMENTS

DETAILS OF ELASTOMERIC EXPANSION JOINT SEAL AT BENT NO. 8

FEB. 1978 | MAY 1987

DETAILED NOV. 1988
CHECKED JULY 1989

Note: This drawing is not to scale. Follow dimensions.

STATE	PROJ. NO	SHEET NO
MO		64

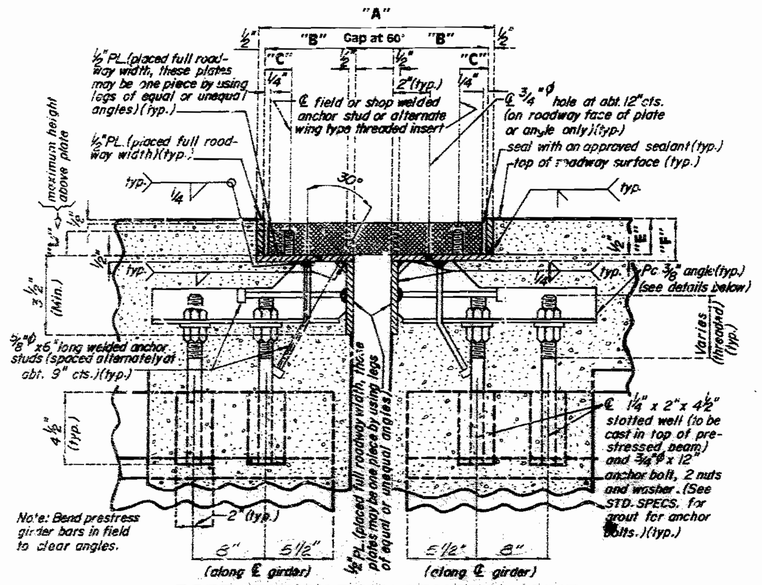

PART SECTION THRU ARMORED JOINT

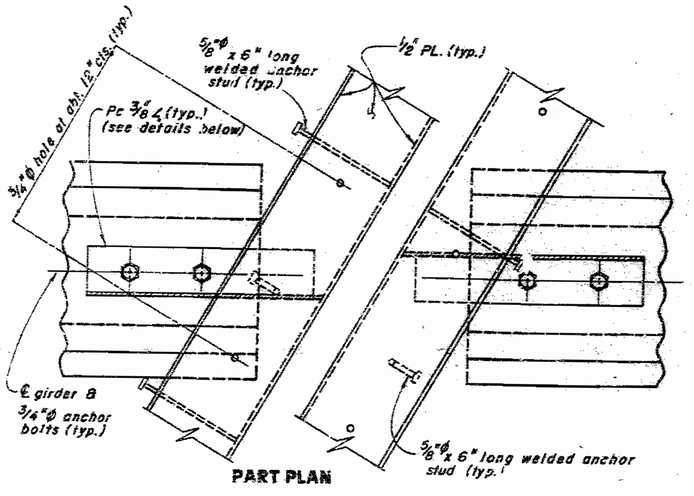

PART PLAN

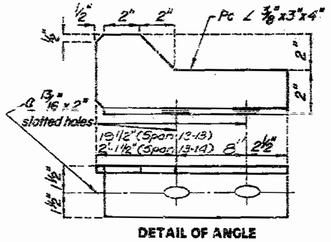

DETAIL OF ANGLE

Note: Angles placed at each girder.

TABLE OF DIMENSIONS

LOCATION	ACCEPTABLE ALTERNATE TYPES	EXP. GAP AT 60°	"A" AT 60°	"B"	"C"	"D"	"E"	"F"	ANCHOR STUDS SIZE	ANCHOR STUDS SPA.	ANCHOR STUDS "G"
Bt. #13	Delastiflex Lm 300	2"	12 3/8"	4 11/16"	2 3/16"	7/8"	2"	2 1/2"	1/2"	9"	45
	Gen-Strip CCL 3"	2 1/4"	11 3/8"	4 1/4"	1 3/8"	1 1/8"	1 3/4"	2 1/8"	5/8"	12"	65
	On-Flex 35	2"	11 1/2"	4 1/4"	1 3/8"	1 1/4"	2 3/8"	2 7/8"	5/8"	12"	65
	Watbo Bands Flex 450	2"	11 1/2"	4 1/4"	1 3/4"	1 1/4"	2 3/4"	3 1/4"	1/2"	12"	50
	Fel-Span TA0.4 CS	2"	12"	4 1/2"	1 3/8"	1 1/2"	2 1/4"	2 3/4"	1/2"	12"	50
	Acme Trojan TA400	2 1/2"	12"	4 1/2"	1 3/8"	1 1/8"	1 3/4"	2 1/8"	1/2"	12"	40

NOTE: ALL DIMENSIONS ARE AT RIGHT ANGLES.
EXPANSION GAP AND DIMENSION "A" SHALL BE INCREASED 1/4" FOR EACH 10° FALL IN TEMPERATURE AND DECREASED 1/4" FOR EACH 10° RISE IN TEMPERATURE.

GENERAL NOTES:

THE CERTIFIED NUTS AND BOLTS FOR THE ANCHOR STUDS OR WING TYPE THREADED INSERTS SHALL BE TIGHTENED TO THE FOOT POUNDS "G" SPECIFIED IN THE TABLE OF DIMENSIONS. RETIGHTEN TO "G" FOOT POUNDS A MINIMUM OF 30 MINUTES AFTER INITIAL TIGHTENING. THE WELDED ANCHOR STUDS SHALL BE THE REDUCED BASE TYPE

MATERIAL FOR THE ARMORED JOINT SHALL BE A36 STRUCTURAL GRADE STEEL. ANCHORS FOR THE ARMORED JOINT SHALL BE APPROVED STUD WELDED ANCHORS (C1010 THRU C1020).

SEE SPECIAL PROVISIONS FOR PAINTING.

ANCHOR BOLTS IN THE BARRIER CURB SHALL BE CAST-IN-PLACE, GROUTED OR CONE-EXPANSION TYPE. HOLES IN THE BARRIER CURB FOR ANCHORS SHALL NOT BE DRILLED UNTIL THE CONCRETE IS AT LEAST 7 DAYS OLD

PLAN DIMENSIONS ARE BASED ON INSTALLATION AT 60°F. THE EXPANSION GAP AND OTHER DIMENSIONS SHALL BE ADJUSTED DURING INSTALLATION FOR COMPLIANCE WITH ANY TEMPERATURE CHANGE.

CONTACT SURFACE OF STEEL TO ALUMINUM SHALL BE INSULATED WITH THE MATERIAL SPECIFIED ON THE SHOP DRAWINGS.

FURNISHING, PAINTING AND INSTALLING THE STRUCTURAL STEEL ARMORED JOINT AND CURB PLATES SHALL BE INCLUDED IN THE CONTRACT UNIT PRICE FOR ELASTOMERIC EXPANSION JOINT SEAL.

BOLT CAVITIES TO BE FILLED WITH APPROVED SEALANT IN COMPLIANCE WITH MANUFACTURER'S CERTIFICATION.

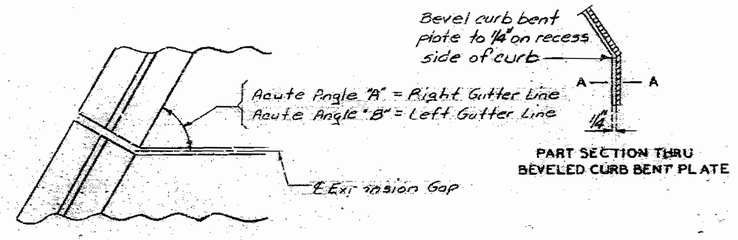

PART PLAN

PART SECTION THRU BEVELED CURB BENT PLATE

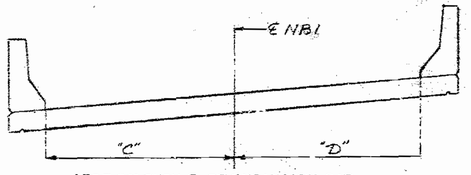

SECTION THRU ℄ OF EXPANSION GAP

BENT NO.	GRADE ELEVATION LEFT GUTTER LINE	GRADE ELEVATION ℄ OF RDWY.	GRADE ELEVATION RIGHT GUTTER LINE	ANGLE "A"	ANGLE "B"	HOR. DIMENSION "C"	HOR. DIMENSION "D"
13	819.08	820.11	820.83	*	**	20'-11 5/8"	24'-2 3/4"

* 93°-46'-47"
** 44°-32'-47"

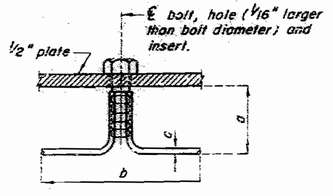

BOLT DIAMETER	SAFE LOAD TENSION (LBS.) (MIN.)	APPROX. ULT. CAP. TENSION (LBS.) (MIN.)	DIMENSIONS a (MIN.)	b	c
1/2"	800	8,000	1-5/8"	5"	.218"
5/8"	1,300	9,200	1-5/8"	5"	.218"
3/4"	1,900	13,200	2-1/4"	6"	.262"
7/8"	2,500	16,200	2-1/2"	6-1/2"	.306"
1"	2,000	16,200	2-1/2"	6-1/2"	.306"

DETAILS OF ALTERNATE WING TYPE THREADED INSERT

(MACHINE BOLTS NEED ONLY BE USED TO SECURE THE WING TYPE THREADED INSERTS TO THE STEEL PLATE UNTIL THE CONCRETE HAS ATTAINED 3,000 p.s.i.)

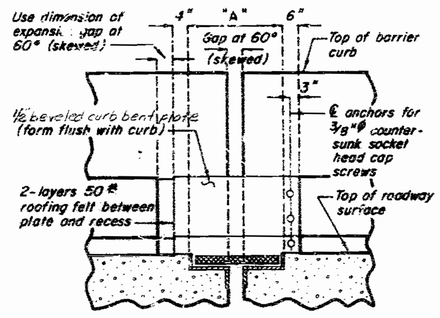

PART ELEVATION OF BARRIER CURB

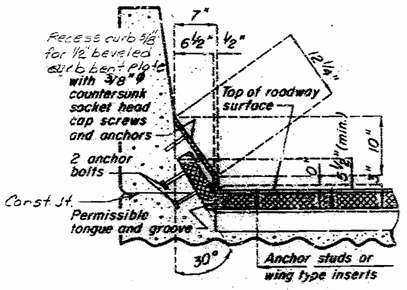

TYPE "A" CURB

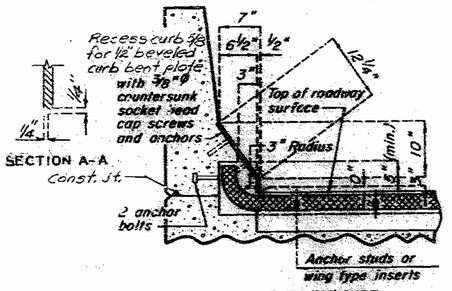

TYPE "B" CURB

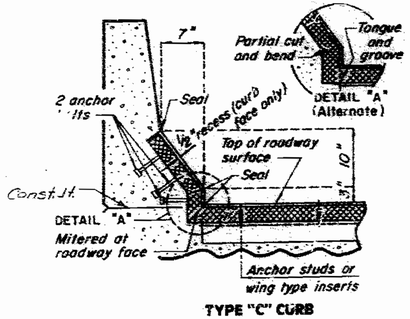

TYPE "C" CURB

ALTERNATE CURB TREATMENTS

DETAILS OF ELASTOMERIC EXPANSION JOINT SEAL AT BENT NO. 13

DETAILED NOV. 1938
CHECKED JULY 1989

Note: This drawing is not to scale. Follow dimensions.

STATE	PROJ NO	SHEET NO
MO		65

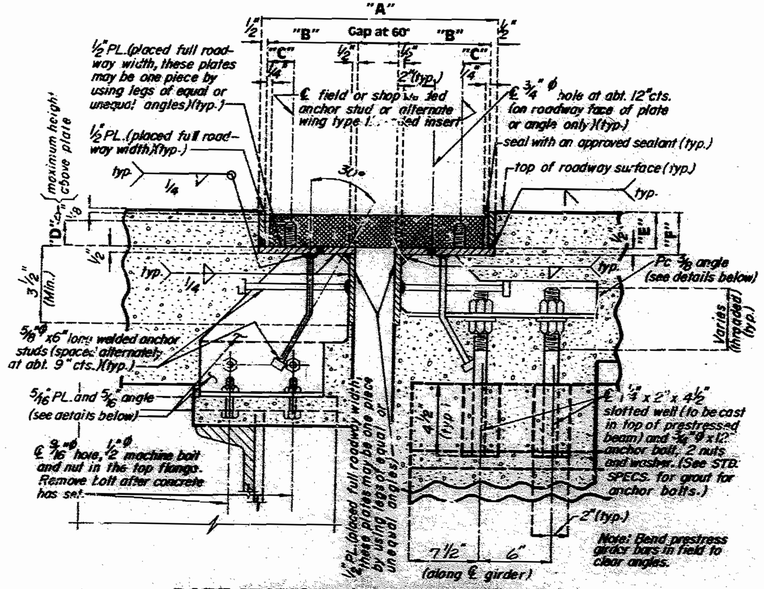

PART SECTION THRU ARMORED JOINT

TABLE OF DIMENSIONS

LOCATION	ACCEPTABLE ALTERNATE TYPES	EXP. GAP AT 60°	"A" AT 60°	"B"	"C"	"D"	"E"	"F"	ANCHOR STUDS SIZE	ANCHOR STUDS SPA.	ANCHOR STUDS "G"
Bt. #17	On-Flex 45	2¼"	11¾"	4¼"	1⅝"	1½"	2¾"	3¼"	⅝	12"	65
	Wabo Bendoflex 450	2½"	12"	4¼"	1⅜"	1¼"	2¾"	3¼"	½"	12"	50
	Fel-Span T40A CS	2¼"	12¼"	4½"	1⅜"	1½"	2½"	2¾"	½"	12"	50
	Acme Trojan TR400	2½"	12"	4¼"	1¾"	1⅛"	1¾"	2⅛"	½"	12"	40
	Delastiflex LM 400	2½"	12⅞"	4⅛"	2⅝"	⅞"	2"	2½"	½"	9"	45
	Gen-Strip CCL 4"	2½"	12"	4⅛"	1¾"	1⅛"	1¾"	2¼"	⅝	12"	65

NOTE: ALL DIMENSIONS ARE AT RIGHT ANGLES.
EXPANSION GAP AND DIMENSION "A" SHALL BE INCREASED 1/4" FOR EACH 10° FALL IN TEMPERATURE AND DECREASED 1/4" FOR EACH 10° RISE IN TEMPERATURE.

GENERAL NOTES:

THE CERTIFIED NUTS AND BOLTS FOR THE ANCHOR STUDS OR WING TYPE THREADED INSERTS SHALL BE TIGHTENED TO THE FOOT POUNDS "G" SPECIFIED IN THE TABLE OF DIMENSIONS. RETIGHTEN TO "G" FOOT POUNDS A MINIMUM OF 30 MINUTES AFTER INITIAL TIGHTENING. THE WELDED ANCHOR STUDS SHALL BE THE REDUCED BASE TYPE.

MATERIAL: FOR THE ARMORED JOINT SHALL BE A36 STRUCTURAL GRADE STEEL. ANCHORS FOR THE ARMORED JOINT SHALL BE APPROVED STUD WELDED ANCHORS (C10.0 THRU C1020).

SEE SPECIAL PROVISIONS FOR PAINTING.

ANCHOR BOLTS IN THE BARRIER CURB SHALL BE CAST-IN-PLACE, GROUTED OR CONE-EXPANSION TYPE. HOLES IN THE BARRIER CURB FOR ANCHORS SHALL NOT BE DRILLED UNTIL THE CONCRETE IS AT LEAST 7 DAYS OLD.

PLAN DIMENSIONS ARE BASED ON INSTALLATION AT 60°F. THE EXPANSION GAP AND OTHER DIMENSIONS SHALL BE ADJUSTED DURING INSTALLATION FOR COMPLIANCE WITH ANY TEMPERATURE CHANGE.

CONTACT SURFACE OF STEEL TO ALUMINUM SHALL BE INSULATED WITH THE MATERIAL SPECIFIED ON THE SHOP DRAWINGS.

FURNISHING, PAINTING AND INSTALLING THE STRUCTURAL STEEL ARMORED JOINT AND CURB PLATES SHALL BE INCLUDED IN THE CONTRACT UNIT PRICE FOR ELASTOMERIC EXPANSION JOINT SEAL.

BOLT CAVITIES TO BE FILLED WITH APPROVED SEALANT IN COMPLIANCE WITH MANUFACTURER'S CERTIFICATION.

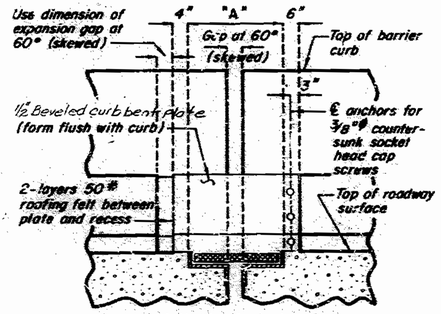

PART ELEVATION OF BARRIER CURB

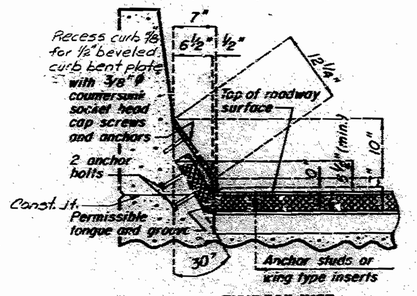

TYPE "A" CURB

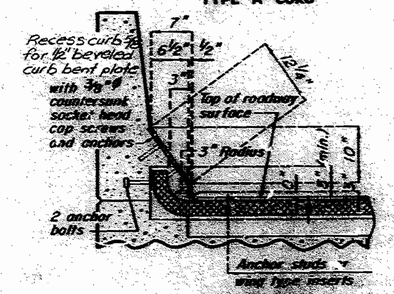

TYPE "B" CURB

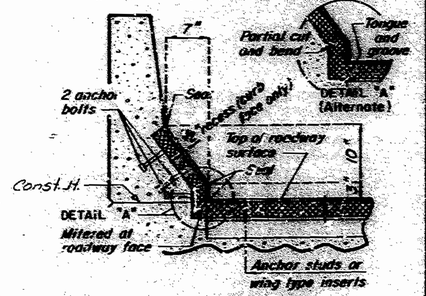

TYPE "C" CURB

ALTERNATE CURB TREATMENTS

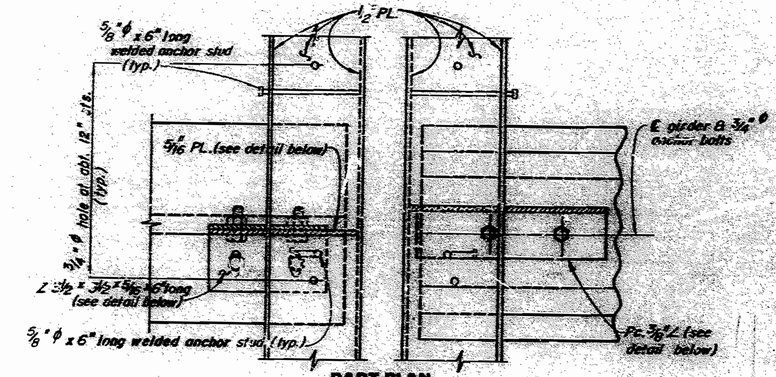

PART PLAN

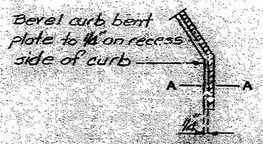

PART SECTION THRU BEVELED CURB BENT PLATE

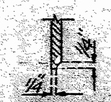

SECTION A-A

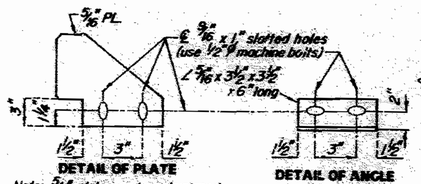

DETAIL OF PLATE

DETAIL OF ANGLE

Note: 5/16" plates and angle placed at each girder or stringer.

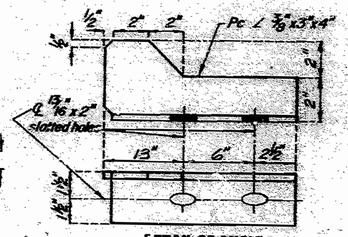

DETAIL OF ANGLE

Note: Angles placed at each girder.

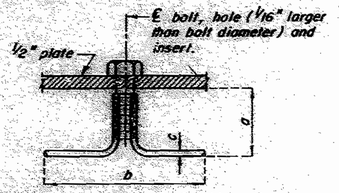

BOLT DIAMETER	SAFE LOAD (KIPS PER BOLT)	APPROX. ULT. CAP. (KIPS PER BOLT)	DIMENSIONS a (MIN.)	b	c
1/2"	800	32,000	1-3/8"	5"	2½"
5/8"	1,200	9,240	1-5/8"		2½"
3/4"	1,700	15,300	2-1/4"	8"	
7/8"	2,300	18,200	2-1/2	6-1/2"	"6"
1"	2,900	19,200	2-1/2"	6-1/2"	"6"

DETAILS OF ALTERNATE WING TYPE INSERT

(MACHINE BOLTS NEED ONLY BE USED TO SECURE THE WING TYPE THREADED INSERTS TO THE STEEL PLATE UNTIL THE CONCRETE HAS ATTAINED 3,000 p.s.i.)

DETAILS OF ELASTOMERIC EXPANSION JOINT SEAL AT BENT NO. 17

ELASTOMERIC EXPANSION JOINT SEAL	
SPS - INT. BT.	REVISED
FEB. 1978	MAY 1987

DETAILED NOV. 1988
CHECKED July 1989

Note: This drawing is not to scale. Follow dimensions.

10-89

STATE	PROJ. NO.	SHEET NO.
MO.		66

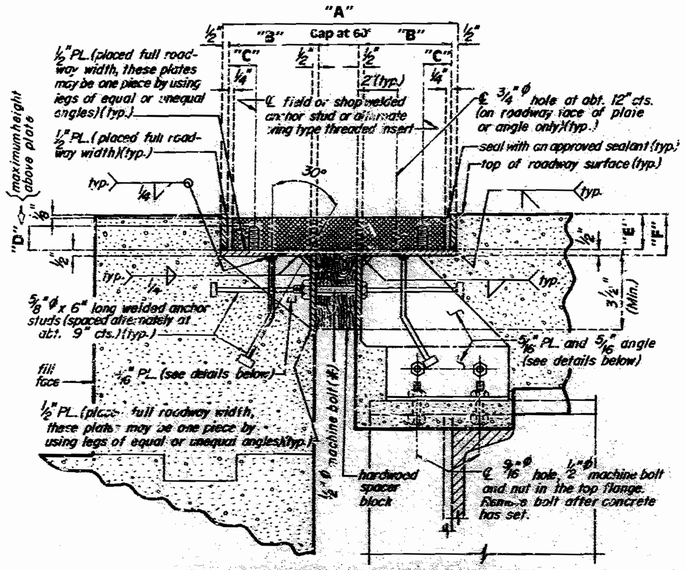

PART SECTION THRU ARMORED JOINT

TABLE OF DIMENSIONS

LOCATION	ACCEPTABLE ALTERNATE TYPES	EXP. GAP AT 60°	"A" AT 60°	"B"	"C"	"D"	"E"	"F"	ANCHOR STUDS SIZE	ANCHOR STUDS SPA.	ANCHOR STUDS "G"
Bt. #21	On-Flex 45	2 1/4"	11 3/4"	4 1/4"	1 3/8"	1 1/2"	2 3/8"	3 1/4"	5/8"	12"	65
	Wabo Bendoflex 450	2 1/2"	12"	9 1/4"	1 3/8"	1 1/4"	2 3/8"	3 1/4"	1/2"	12"	50
	Fel-Span T40A CS	2 1/4"	12 1/4"	4 1/2"	1 3/8"	1 1/2"	2 1/4"	2 3/8"	1/2"	12"	50

NOTE: ALL DIMENSIONS ARE AT RIGHT ANGLES.
EXPANSION GAP AND DIMENSION "A" SHALL BE INCREASED 1/4" FOR EACH 10° FALL IN TEMPERATURE AND DECREASED 1/4" FOR EACH 10° RISE IN TEMPERATURE.

GENERAL NOTES:

THE CERTIFIED NUTS AND BOLTS FOR THE ANCHOR STUDS OR WING TYPE THREADED INSERTS SHALL BE TIGHTENED TO THE FOOT POUNDS "G" SPECIFIED IN THE TABLE OF DIMENSIONS. RETIGHTEN TO "G" FOOT POUNDS A MINIMUM OF 30 MINUTES AFTER INITIAL TIGHTENING. THE WELDED ANCHOR STUDS SHALL BE THE REDUCED BASE TYPE.

MATERIAL FOR THE ARMORED JOINT SHALL BE A36 STRUCTURAL GRADE STEEL. ANCHORS FOR THE ARMORED JOINT SHALL BE APPROVED STUD WELDED ANCHORS (C1010 THRU C1020).

SEE SPECIAL PROVISIONS FOR PAINTING.

ANCHOR BOLTS IN THE BARRIER CURB SHALL BE CAST IN PLACE, GROUTED OR CONE-EXPANSION TYPE. HOLES IN THE BARRIER CURB FOR ANCHORS SHALL NOT BE DRILLED UNTIL THE CONCRETE IS AT LEAST 7 DAYS OLD.

PLAN DIMENSIONS ARE BASED ON INSTALLATION AT 60°F. THE EXPANSION GAP AND OTHER DIMENSIONS SHALL BE ADJUSTED DURING INSTALLATION FOR COMPLIANCE WITH ANY TEMPERATURE CHANGE.

CONTACT SURFACE OF STEEL TO ALUMINUM SHALL BE INSULATED WITH THE MATERIAL SPECIFIED ON THE SHOP DRAWINGS.

FURNISHING, PAINTING AND INSTALLING THE STRUCTURAL STEEL ARMORED JOINT AND CURB PLATES SHALL BE INCLUDED IN THE CONTRACT UNIT PRICE FOR ELASTOMERIC EXPANSION JOINT SEAL.

BOLT CAVITIES TO BE FILLED WITH APPROVED SEALANT IN COMPLIANCE WITH MANUFACTURER'S CERTIFICATION.

PLATES SHALL BE FIELD ADJUSTED BY ADDING OR REMOVING METAL SHIMS (2" x 3"), AS REQUIRED FOR TEMPERATURE CORRECTION. THE EXPANSION GAP SHALL BE ADJUSTED FOR ANY TEMPERATURE CORRECTION PRIOR TO POURING TOP OF END BENT BACKWALL.

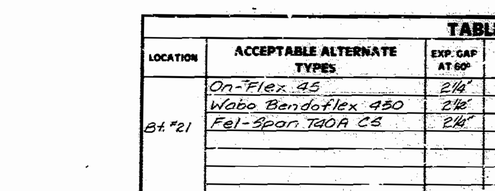

PART PLAN

PART SECTION THRU BEVELED CURB BENT PLATE

SECTION A-A

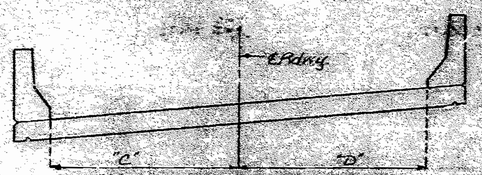

SECTION THRU ℄ OF EXPANSION GAP

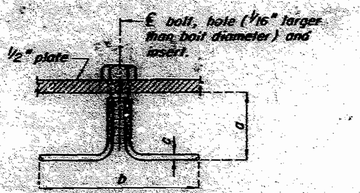

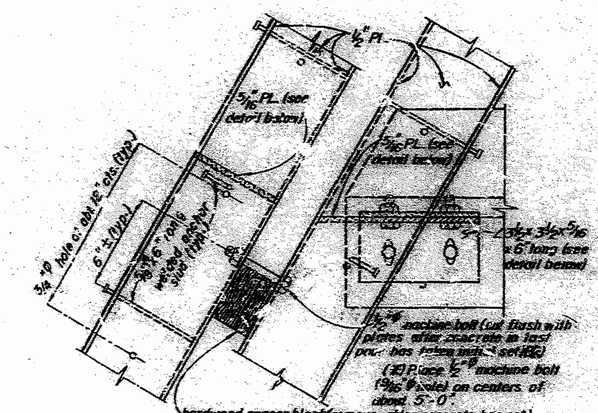

PART PLAN

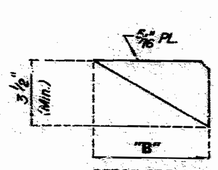

DETAIL OF PLATE

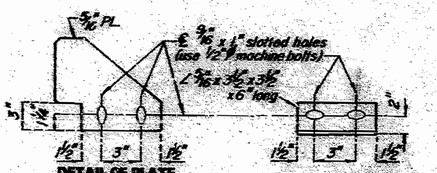

DETAIL OF PLATE

Note: 5/16" plates and angle placed at each girder or stringer.

DETAIL OF ANGLE

BENT NO.	GRADE ELEVATION LEFT GUTTER LINE	GRADE ELEVATION ℄ OF RDWY.	GRADE ELEVATION RIGHT GUTTER LINE	ANGLES "A"	ANGLES "B"	LIGHT DIMENSION "C"	LIGHT DIMENSION "D"
21	919.22	914.31	916.25	*	**	33-28'-42"	

* 33°-58'-53"
** 32°-47'-01"

BOLT DIAMETER	SAFE LOAD TENSION (LBS.) SHEAR	APPROX. WT. PER THREAD (LBS.)	DIMENSIONS a (MIN.)	b	c
½"	4,000	0.028	1-3/8"	5"	2½"
⅝"	6,200	0.045	1-5/8"	5"	2½"
¾"	8,900	0.065	1-7/8"	5"	2½"
⅞"	12,100	0.088	2-1/8"	6"	3½"
1"	15,800	0.115	2-3/8"	6-1/2"	3½"
1"	20,000	0.142	2-5/8"	8-1/2"	3½"

DETAILS OF ALTERNATE WING TYPE THREADED INSERT

(MACHINE BOLTS NEED ONLY BE USED TO SECURE THE WING TYPE THREADED INSERTS TO THE STEEL PLATE OVER THE CONCRETE (HAS ATTAINED 3,000 p.s.i.)

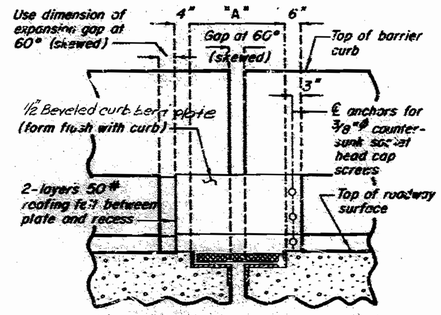

PART ELEVATION OF BARRIER CURB

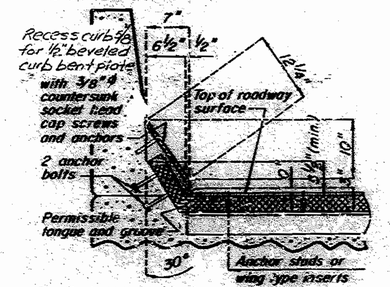

TYPE "A" CURB

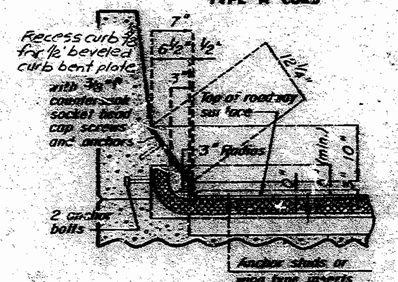

TYPE "B" CURB

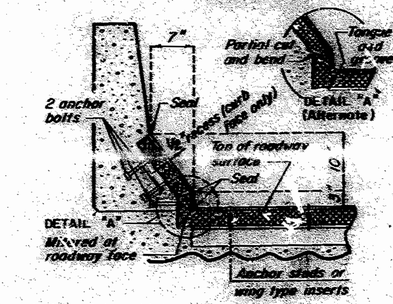

TYPE "C" CURB

ALTERNATE CURB TREATMENTS

DETAILS OF ELASTOMERIC EXPANSION JOINT SEAL AT BENT NO. 21

DETAILED NOV. 1988
CHECKED July 1989

SRS-END BT. REVISED FEB. 1978 MAY 1987

Note: This drawing is not to scale. Follow dimensions.

STATE	PROJ NO	SHEET NO
MO		67

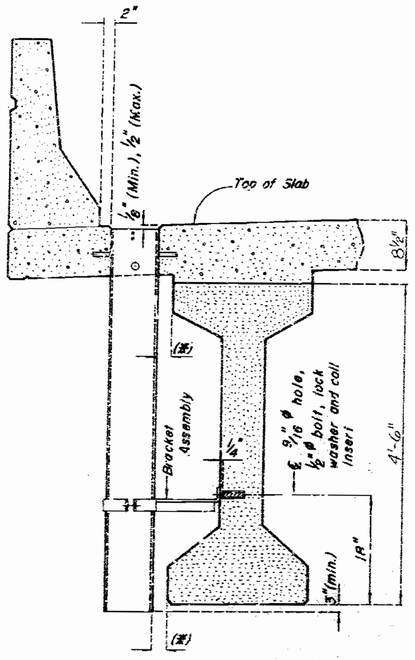

PART ELEVATION OF SLAB AT DRAIN

(*) If dimension is less than 1", drains shall be placed parallel to roadway, otherwise place drains transverse to roadway.

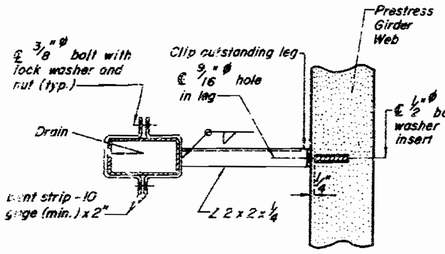

PART SECTION SHOWING BRACKET ASSEMBLY

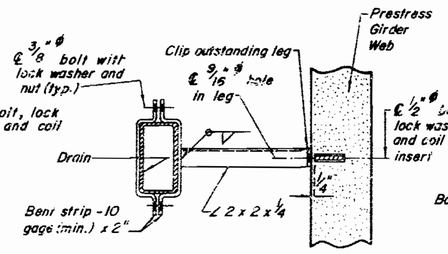

PART SECTION SHOWING BRACKET ASSEMBLY

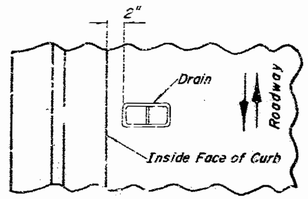

PART PLAN OF SLAB AT DRAIN

DETAILS OF DRAINS TRANSVERSE TO ROADWAY

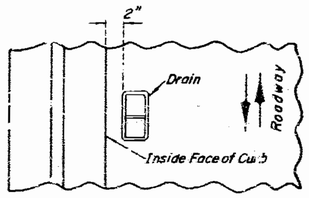

PART PLAN OF SLAB AT DRAIN

DETAILS OF DRAINS PARALLEL TO ROADWAY

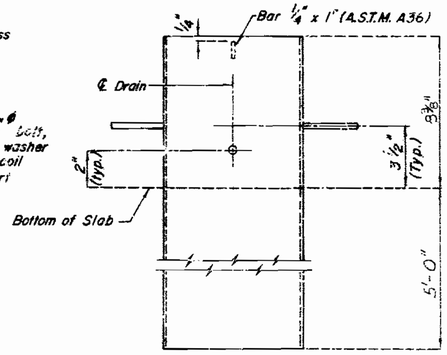

ELEVATION OF DRAIN

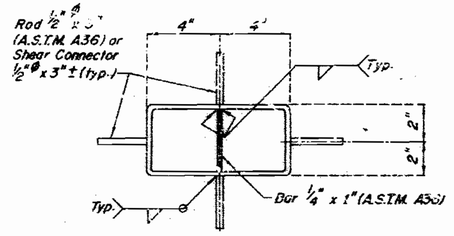

PLAN OF DRAIN

GENERAL NOTES:

SLAB DRAINS MAY BE FABRICATED OF EITHER ¼" WELDED SHEETS OF A.S.T.M. A36 STEEL OR FROM ¼" STRUCTURAL STEEL TUBING A.S.T.M. A500 OR A501.

OUTSIDE DIMENSIONS OF DRAINS ARE 8" x 4".

LOCATE DRAINS IN THE SLAB BY DIMENSIONS SHOWN IN THE PART ELEVATION.

SHIFT REINFORCING IN FIELD WHERE NECESSARY TO CLEAR DRAINS.

THE DRAINS AND BRACKET ASSEMBLY SHALL BE GALVANIZED IN ACCORDANCE WITH A.S.T.M. A123.

ALL BOLTS, LOCK WASHERS AND NUTS SHALL BE GALVANIZED IN ACCORDANCE WITH A.S.T.M. A153.

SHOP DRAWINGS WILL NOT BE REQUIRED FOR SLAB DRAINS AND THE BRACKET ASSEMBLY.

COIL INSERTS SHALL HAVE A CONCRETE PULL-OUT STRENGTH (ULTIMATE LOAD) OF AT LEAST 7,500 POUNDS IN 5,000 PSI CONCRETE.

SLAB DRAIN DETAILS

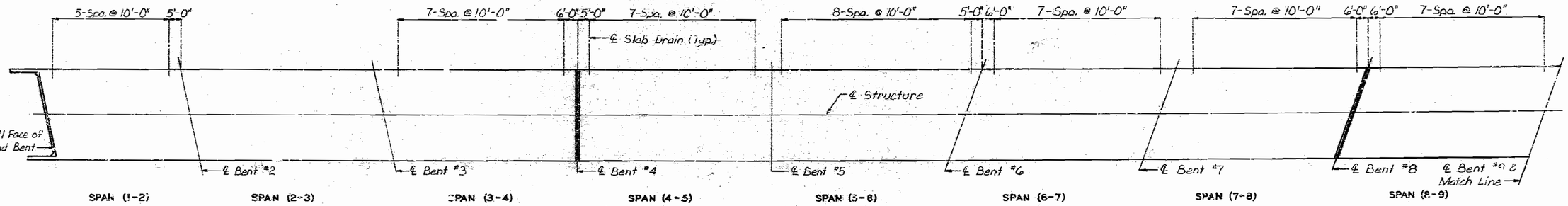

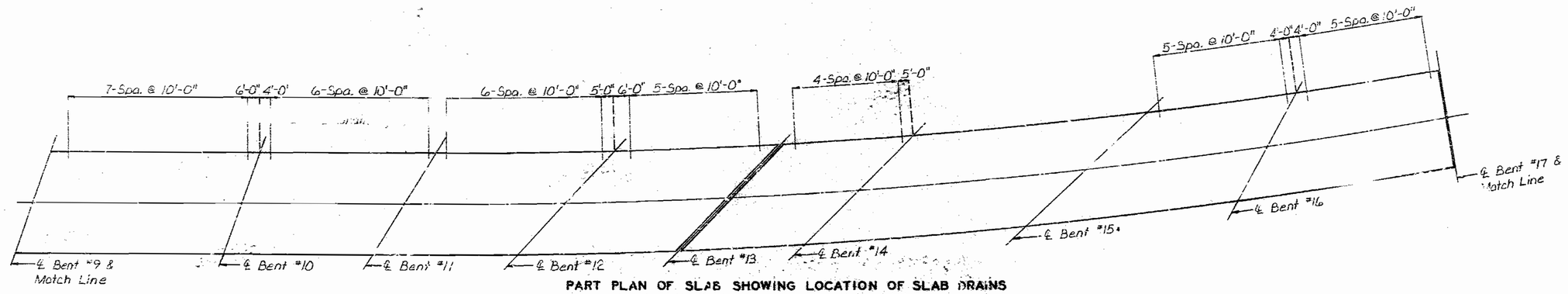

PART PLAN OF SLAB SHOWING LOCATION OF SLAB DRAINS

Note : Longitudinal dimensions are horizontal.

DETAILED July 1989

CHECKED July 1989

No. : This drawing is not to scale. Follow dimensions.

JACKSON COUNTY

A-2733

SECTION 1388 REVISED 1992 July

STATE	PROJ. NO.	SHEET NO.
MO.		68

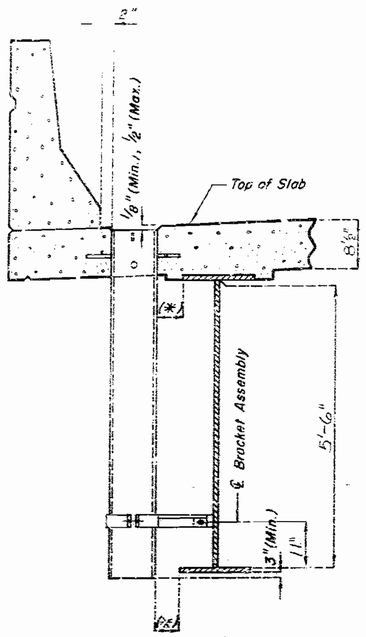

PART ELEVATION OF SLAB AT DRAIN

(*) If dimension is less than 1", drains shall be placed parallel to roadway, otherwise place drains transverse to roadway.

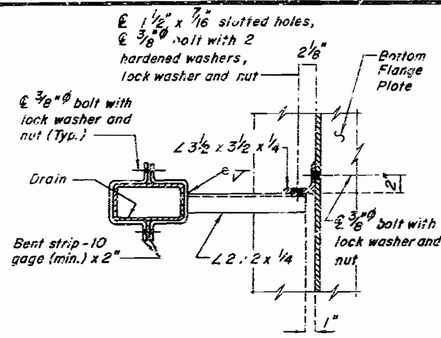

PART SECTION SHOWING BRACKET ASSEMBLY

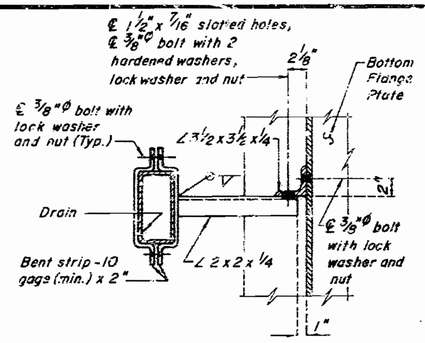

PART SECTION SHOWING BRACKET ASSEMBLY

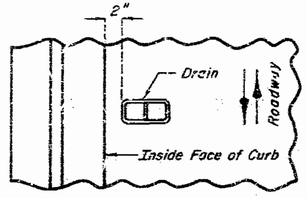

PART PLAN OF SLAB AT DRAIN

DETAILS OF DRAINS TRANSVERSE TO ROADWAY

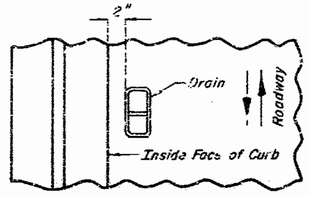

PART PLAN OF SLAB AT DRAIN

DETAILS OF DRAINS PARALLEL TO ROADWAY

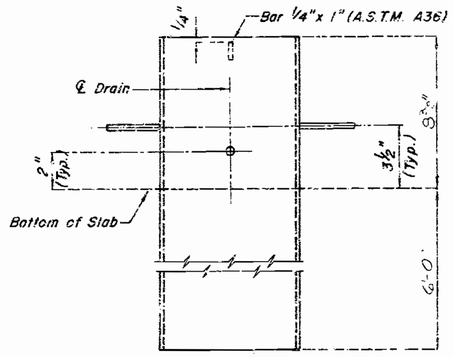

ELEVATION OF DRAIN

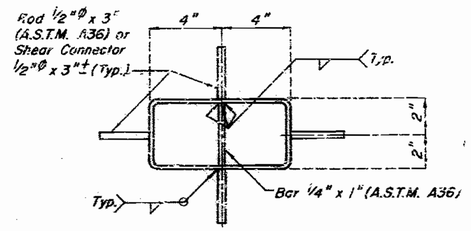

PLAN OF DRAIN

GENERAL NOTES:

SLAB DRAINS MAY BE FABRICATED OF EITHER ¼" WELDED SHEETS OF A.S.T.M. A36 STEEL OR FROM ¼" STRUCTURAL STEEL TUBING A.S.T.M. A500 OR A501.

OUTSIDE DIMENSIONS OF DRAINS ARE 8" x 4".

LOCATE DRAINS IN THE SLAB BY DIMENSIONS SHOWN IN THE PART ELEVATION.

SHIFT REINFORCING IN FIELD WHERE NECESSARY TO CLEAR DRAINS.

THE DRAINS AND BRACKET ASSEMBLY SHALL BE GALVANIZED IN ACCORDANCE WITH A.S.T.M. A123.

ALL BOLTS, HARDENED WASHERS, LOCK WASHERS AND NUTS SHALL BE GALVANIZED IN ACCORDANCE WITH A.S.T.M. A153.

THE BOLT HOLE FOR THE BRACKET ASSEMBLY ATTACHMENT SHALL BE LOCATED ON THE PLATE GIRDER SHOP DRAWINGS.

SHOP DRAWINGS WILL NOT BE REQUIRED FOR SLAB DRAINS AND BRACKET ASSEMBLY.

SLAB DRAIN DETAILS

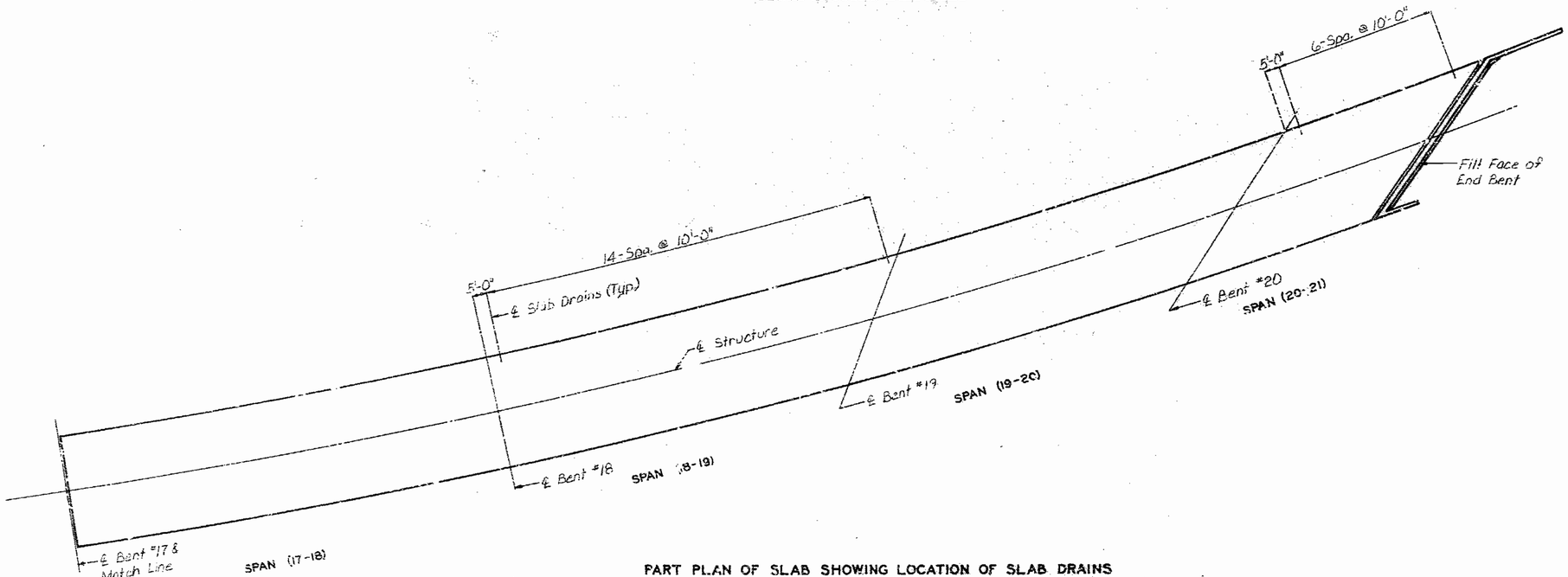

PART PLAN OF SLAB SHOWING LOCATION OF SLAB DRAINS

Note : Longitudinal dimensions are horizontal.

FEB. 1975 | OCT. 1988 | TEEL

DETAILED July 1989
CHECKED July 1989

Note: This drawing is not to scale. Follow dimensions.

STATE	PRO. NO	SHEET NO
MO		63

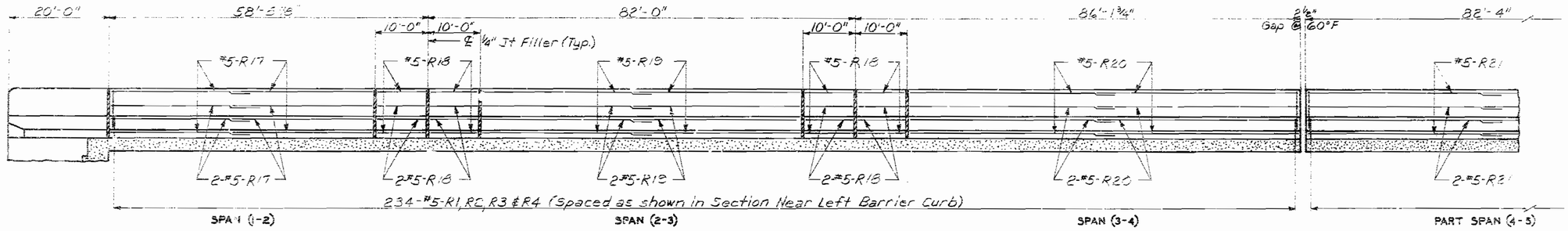

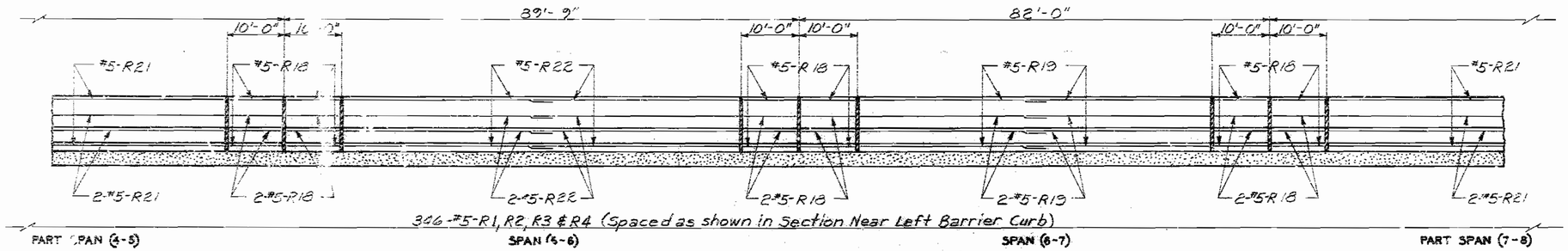

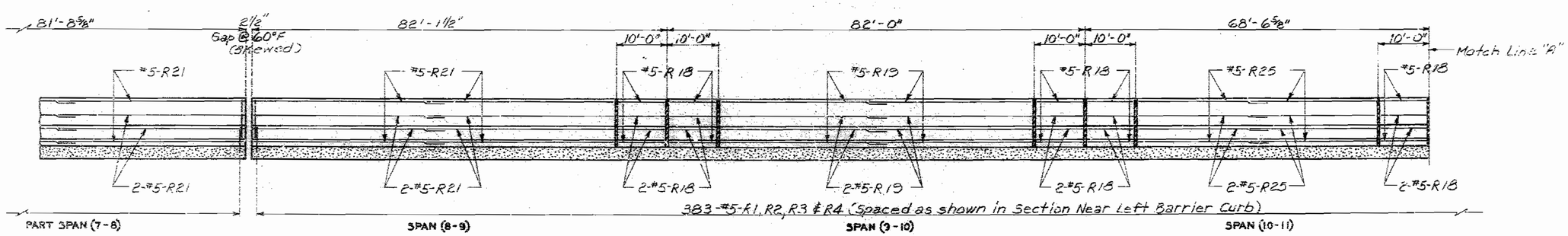

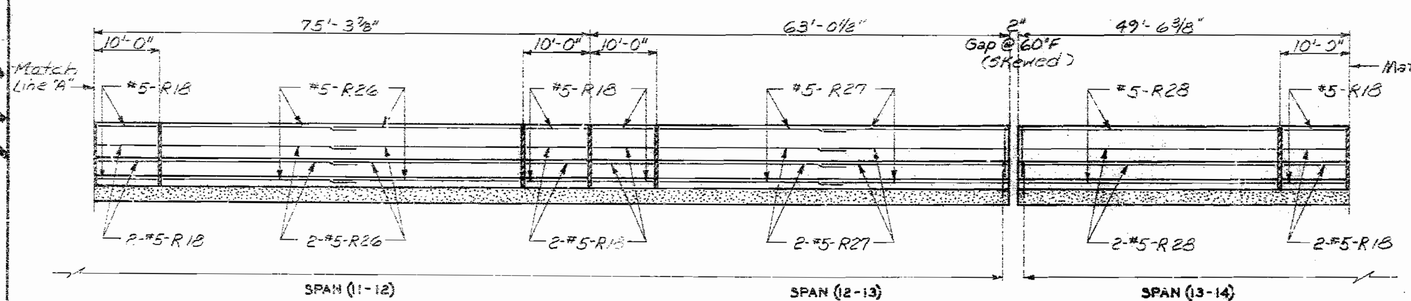

Note: Longitudinal dimensions are horizontal along inside face of barrier curb.
For Part Section Near Left Barrier Curb see sh. No. 68

For details of rustication, see sh. No. 68.

PART SECTION NEAR LEFT BARRIER CURB

DETAILED APRIL 1989
CHECKED JULY 1989

Note: This drawing is not to scale Follow dimensions.

STATE	PROJ. NO.	SHEET NO.
MO.		70

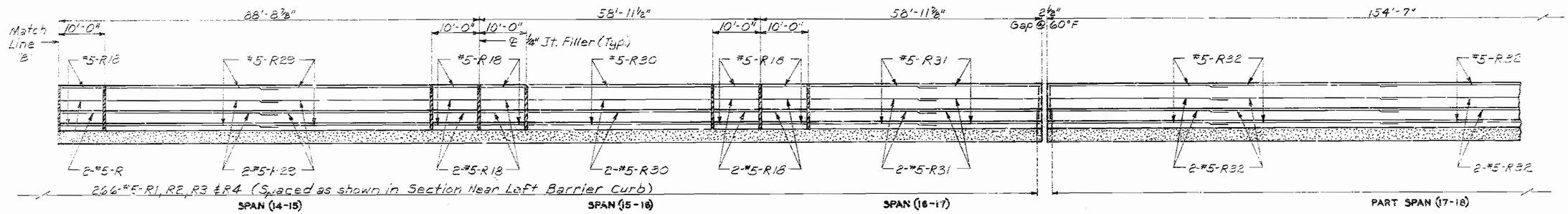

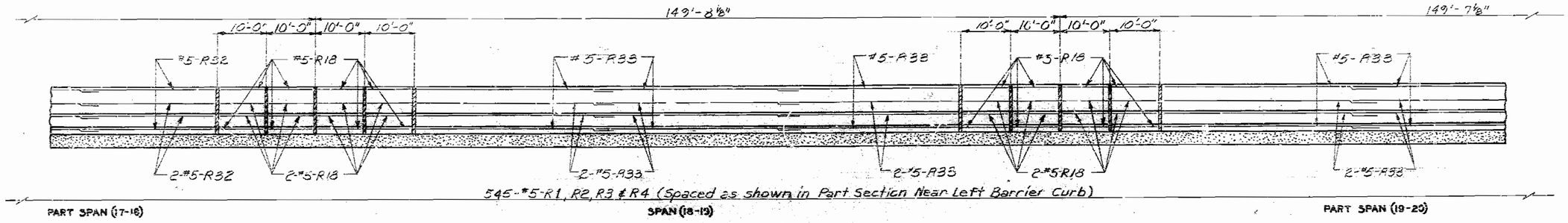

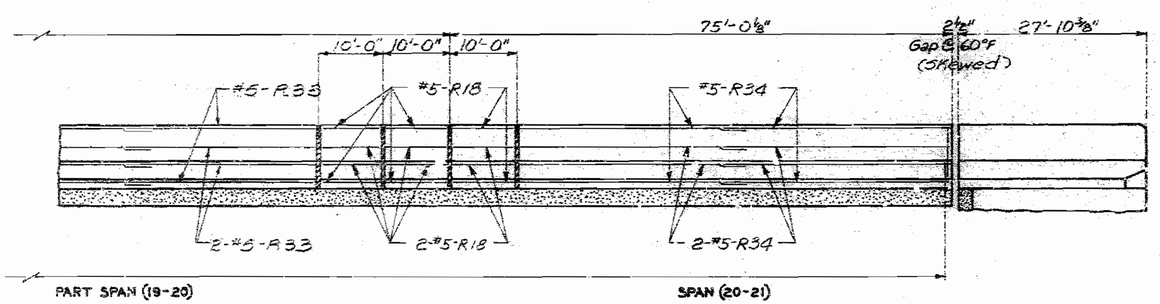

PART SECTION NEAR LEFT BARRIER CURB

Note: Longitudinal dimensions are horizontal along inside face of barrier curb.
For Part Section Near Left Barrier Curb, see sh. No. 68.

For details of rustication, see sh. No. 68

STATE	PROJ. NO.	SHEET NO.
WO		71

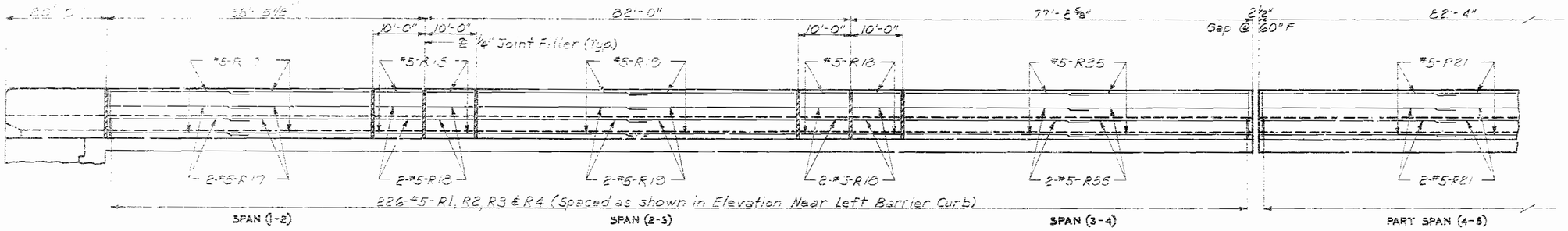

82'-0"
77'-6 5/8"
2 1/2" Gap @ 60° F
62'-4"

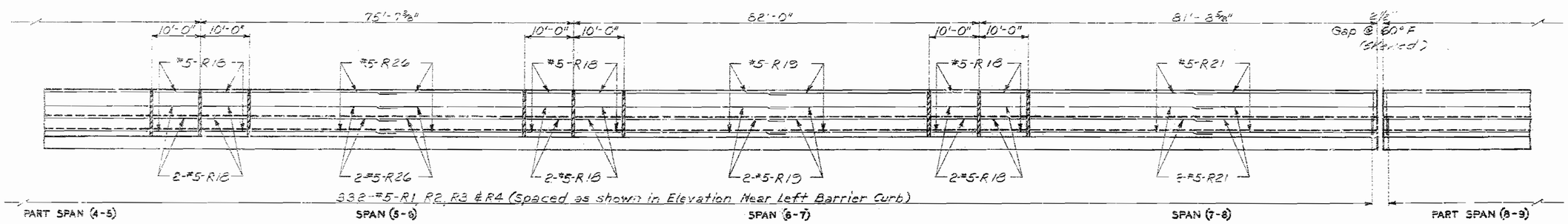

75'-7 3/8"
82'-0"
81'-8 5/8"
2 1/2" Gap @ 60° F (Skewed)

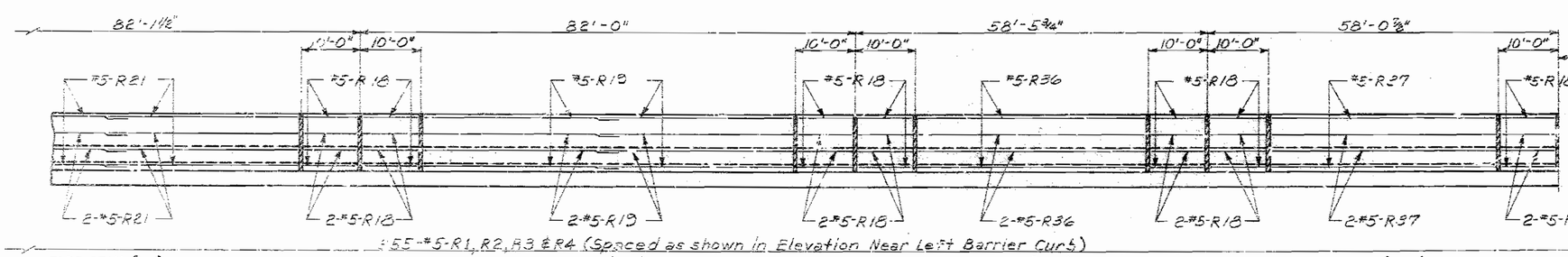

82'-1 1/2"
82'-0"
58'-5 3/4"
58'-0 7/8"

Note: Longitudinal dimensions are horizontal along inside face of barrier curb.
For Part Section Near Left Barrier Curb, see Sh. No. 68

For details of rustication, see Sh. No. 68

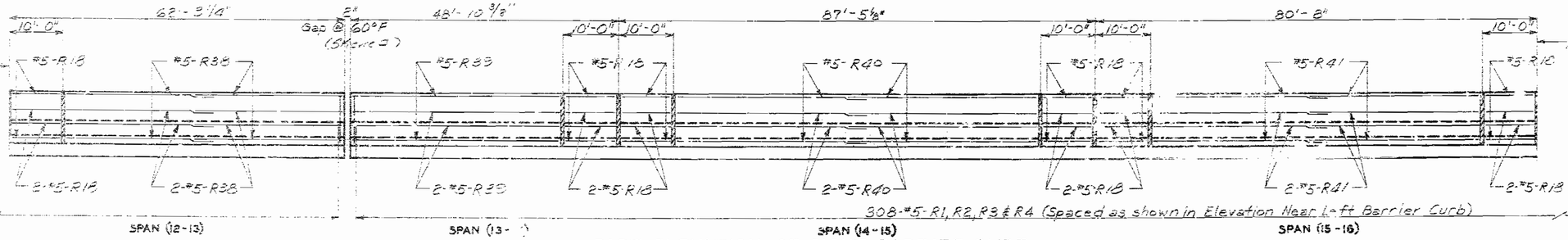

62'-3 1/4"
2" Gap @ 60° F (Skewed)
48'-10 3/8"
87'-5 1/8"
80'-8"

PART ELEVATION OF RIGHT BARRIER CURB

DETAILED APRIL 1988
CHECKED 1987

Sheet No. 66 of 75

JACKSON COUNTY

A-2733

STATE	PROJ. NO	SHEET NO.
MO		72

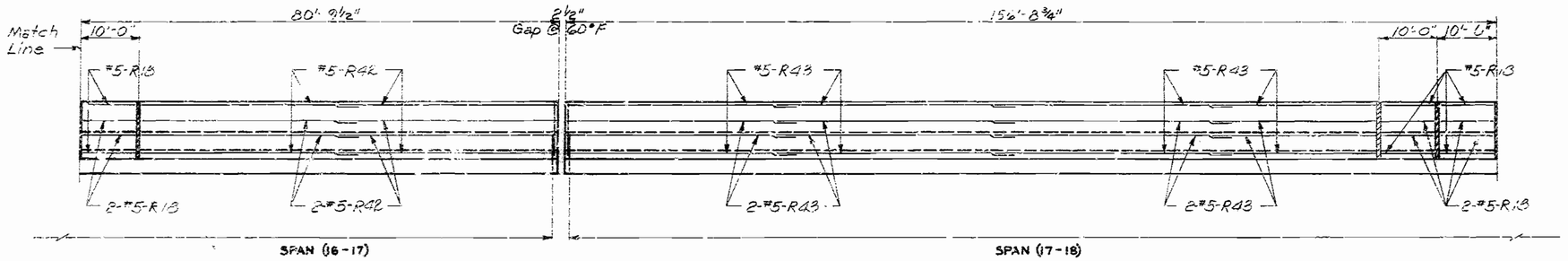

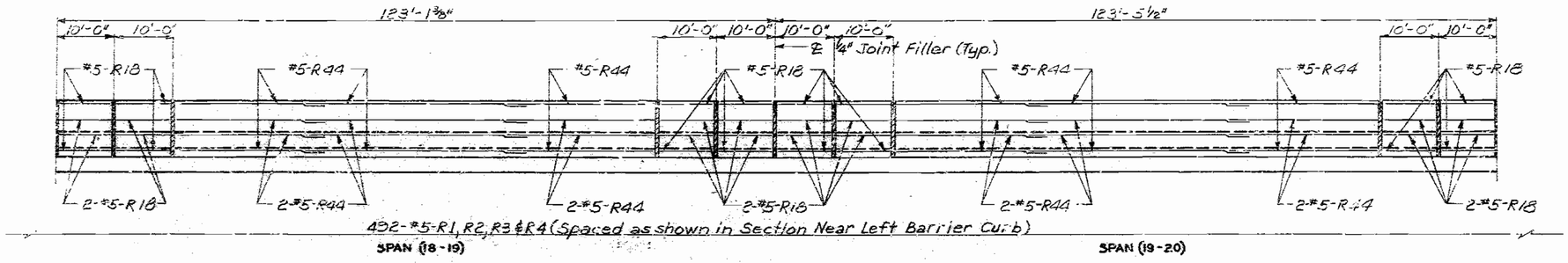

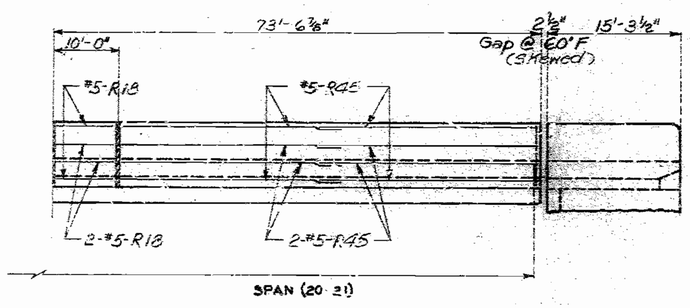

Note: Longitudinal dimensions are horizontal along inside face of barrier curb.
For Part Section Near Left Barrier Curb, see Sh. No. 68

For details of rustication, see Sh. No. 68

PART ELEVATION OF RIGHT BARRIER CURB

STATE	PROJ NO	SHEET NO.
MO		73

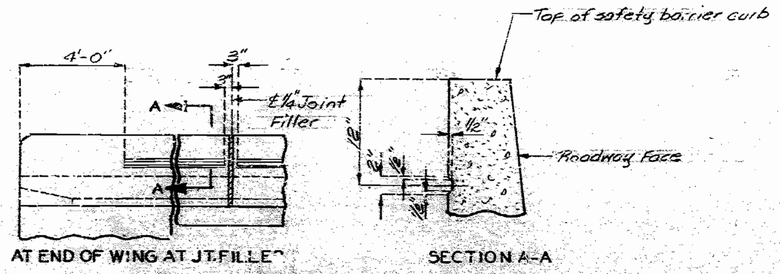

AT END OF WING AT JT. FILLER SECTION A-A

DETAILS OF RUSTICATION

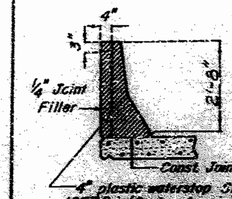

4" plastic waterstop Std. Spec. 1057.21 (Centered on joint)

NOTE: PLASTIC WATERSTOP SHALL BE PLACED IN ALL SAFETY BARRIER CURB FILLED JOINTS. (EXCEPT STRUCTURES WITH SUPERSTRUCTURE, USE ON ALL LOWER SAFETY BARRIER CURB FOR SUPERSTRUCTURE).

COST OF PLASTIC WATERSTOP COMPLETE IN PLACE TO BE INCLUDED IN CONTRACT UNIT PRICE FOR SAFETY BARRIER CURB.

DETAILS OF PLASTIC WATERSTOP

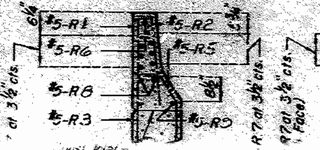

SECTION A-A

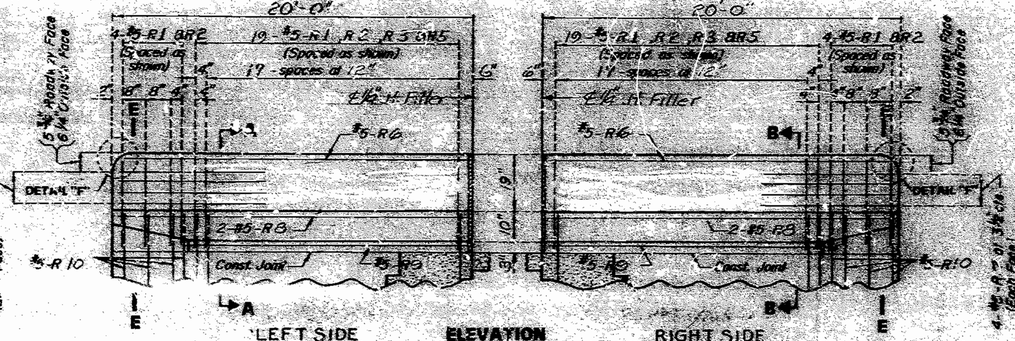

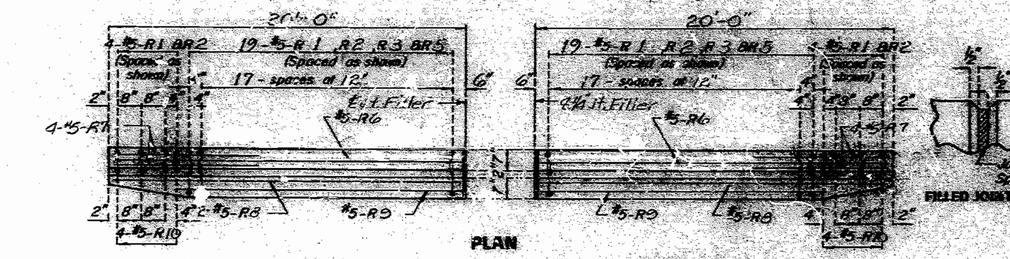

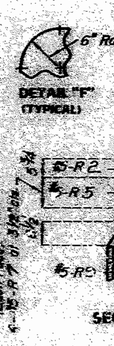

NOTE:

TOP OF SAFETY BARRIER CURB SHALL BE BUILT PARALLEL TO GRADE WITH SAFETY BARRIER CURB JOINTS EXCEPT AT END BENTS, NORMAL TO GRADE.

ALL EXPOSED EDGES OF SAFETY BARRIER CURB SHALL HAVE EITHER A 1/2" ADI IS OR A 3/8" BEVEL, UNLESS OTHERWISE NOTED.

WHEN THE SAFETY BARRIER CURB IS BID BY LINEAR FEET, THE CONTRACT UNIT PRICE SHALL INCLUDE THE COST OF ALL CONCRETE AND REINFORCEMENT, COMPLETE IN-PLACE.

CONCRETE FOR THE SAFETY BARRIER CURB SHALL BE CLASS B1.

MEASUREMENT OF SAFETY BARRIER CURB IS TO THE NEAREST LINEAR FOOT FOR EACH STRUCTURE, MEASURED ALONG THE INSIDE FACE OF CURB FROM END OF WING TO END OF WING.

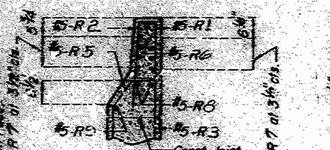

SECTION B-B

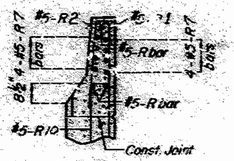

SECTION E-E

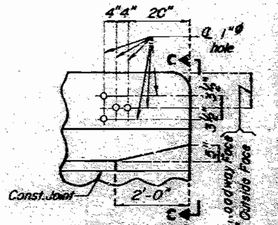

PART ELEVATION

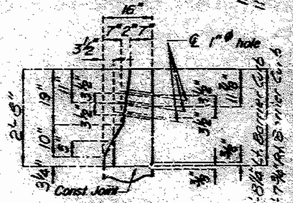

ELEVATION C-C

DETAILS OF GUARD RAIL ATTACHMENT

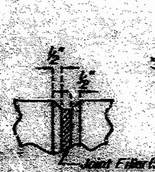

FILLED JOINT DETAIL

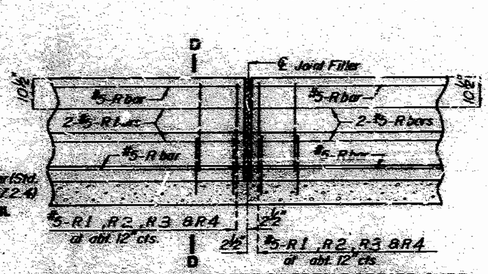

PART SECTION NEAR LEFT SAFETY BARRIER CURB

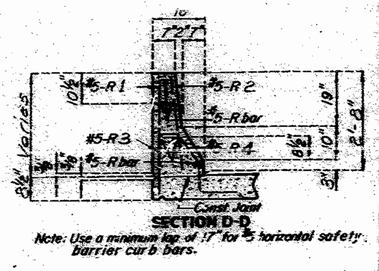

SECTION D-D

Note: Use a minimum lap of 17" for #5 horizontal safety barrier curb bars.

SPS 178(E)	REVISED
AUG. 1978	MAY 1987

DETAILED APRIL 1988
CHECKED July 1989

DETAILS OF SAFETY BARRIER CURB AT END BENT NO. 1

Note: This drawing is not to scale. Follow dimensions.

JACKSON COUNTY

A-2733

STATE	PROJ NO	SHEET NO
MO		74

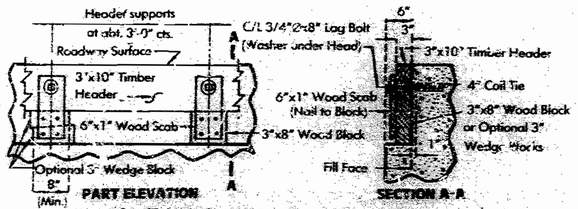

NOTE: Cost of Timber Headers complete in place to be included in contract unit price for concrete.

DETAILS OF TIMBER HEADER AT END JOINTS

Note: For details of construction see Sh. No. 68

NOTE:

TOP OF SAFETY BARRIER CURB SHALL BE BUILT PARALLEL TO GRADE WITH SAFETY BARRIER CURB JOINTS (EXCEPT AT END BENTS) NORMAL TO GRADE.

ALL EXPOSED EDGES OF SAFETY BARRIER CURB SHALL HAVE EITHER A 1/2" RADIUS OR A 3/8" BEVEL UNLESS OTHERWISE NOTED.

WHEN THE SAFETY BARRIER CURB IS PAID BY LINEAR FEET, THE CONTRACT UNIT PRICE SHALL INCLUDE THE COST OF ALL CONCRETE AND REINFORCEMENT, COMPLETE IN PLACE.

CONCRETE FOR THE SAFETY BARRIER CURB SHALL BE CLASS B2.

MEASUREMENT OF SAFETY BARRIER CURB IS TO THE NEAREST LINEAR FOOT FOR EACH STRUCTURE, MEASURED ALONG THE INSIDE FACE OF CURB FROM END OF WING TO END OF WING.

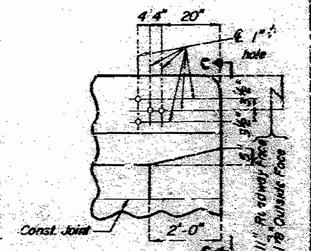

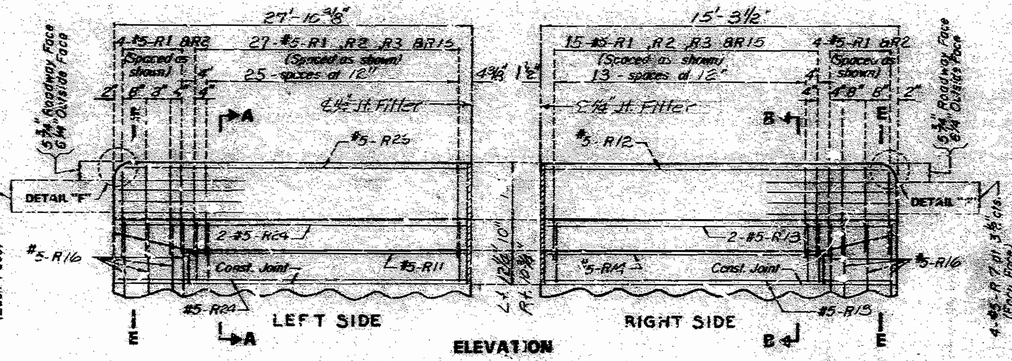

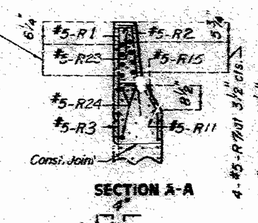

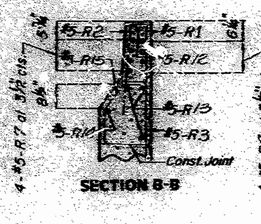

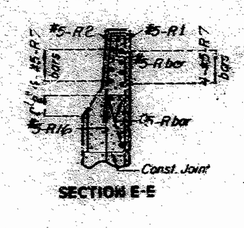

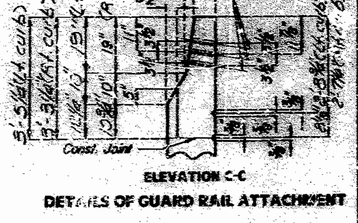

DETAILS OF GUARD RAIL ATTACHMENT

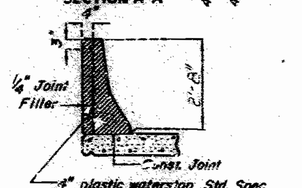

NOTE: PLASTIC WATERSTOP SHALL BE PLACED IN ALL SAFETY BARRIER CURB FILLED JOINTS. (EXCEPT STRUCTURES WITH SUPERELEVATION, USE ON ALL LOWER SAFETY BARRIER CURB JOINTS ONLY).

COST OF PLASTIC WATERSTOP COMPLETE IN PLACE TO BE INCLUDED IN CONTRACT UNIT PRICE FOR SAFETY BARRIER CURB.

DETAILS OF PLASTIC WATERSTOP

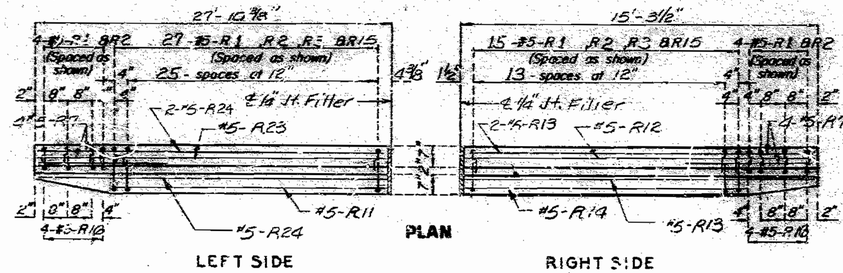

FILLER JOINT DETAIL

DETAILS OF SAFETY BARRIER CURB AT END BENT NO. 21

DETAILED APRIL 1988

CHECKED July 1989

SPS LETTING | REVISED
AUG. 1978 | MAY 1987

Note: This drawing is not to scale. Follow dimensions

Sheet No. 63 of 75.

JACKSON COUNTY

A-2733

FOR INFORMATION ONLY

STATE	PROJ. NO.	SHEET NO.
MO		75

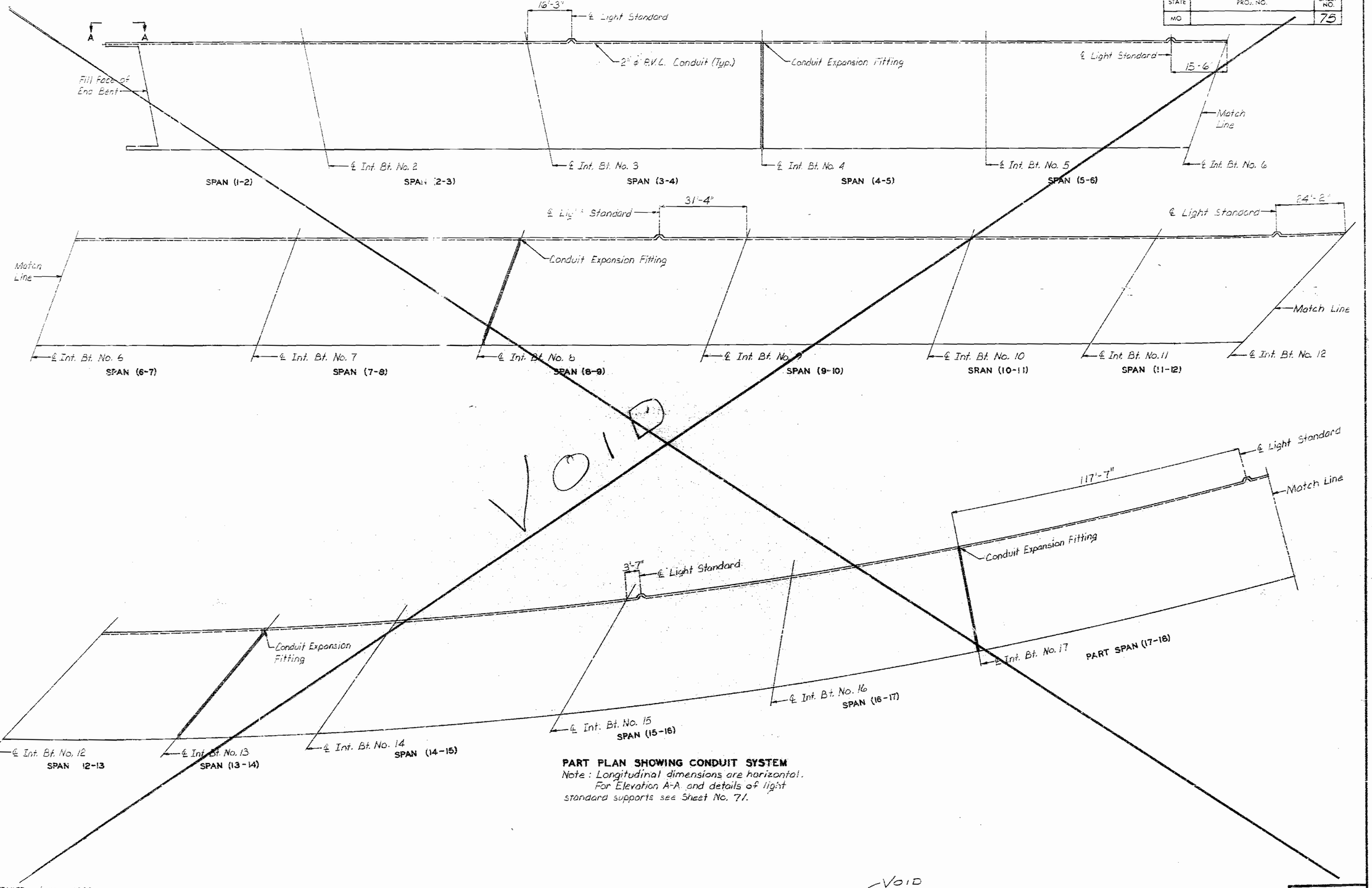

PART PLAN SHOWING CONDUIT SYSTEM

Note : Longitudinal dimensions are horizontal. For Elevation A-A and details of light standard supports see Sheet No. 71.

DETAILED June 1989
CHECKED July 1989

Note: This drawing is not to scale. Follow dimensions.

Sheet No. 70 of 75 VOID

JACKSON COUNTY

A-2733

STATE	PROJ NO	SHEET NO
MO		70

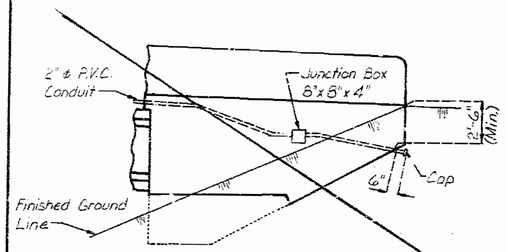

ELEVATION A-A

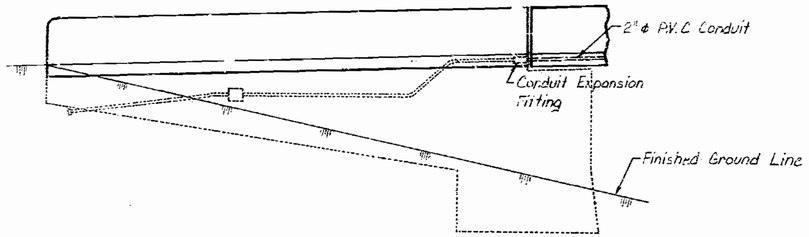

ELEVATION B-B

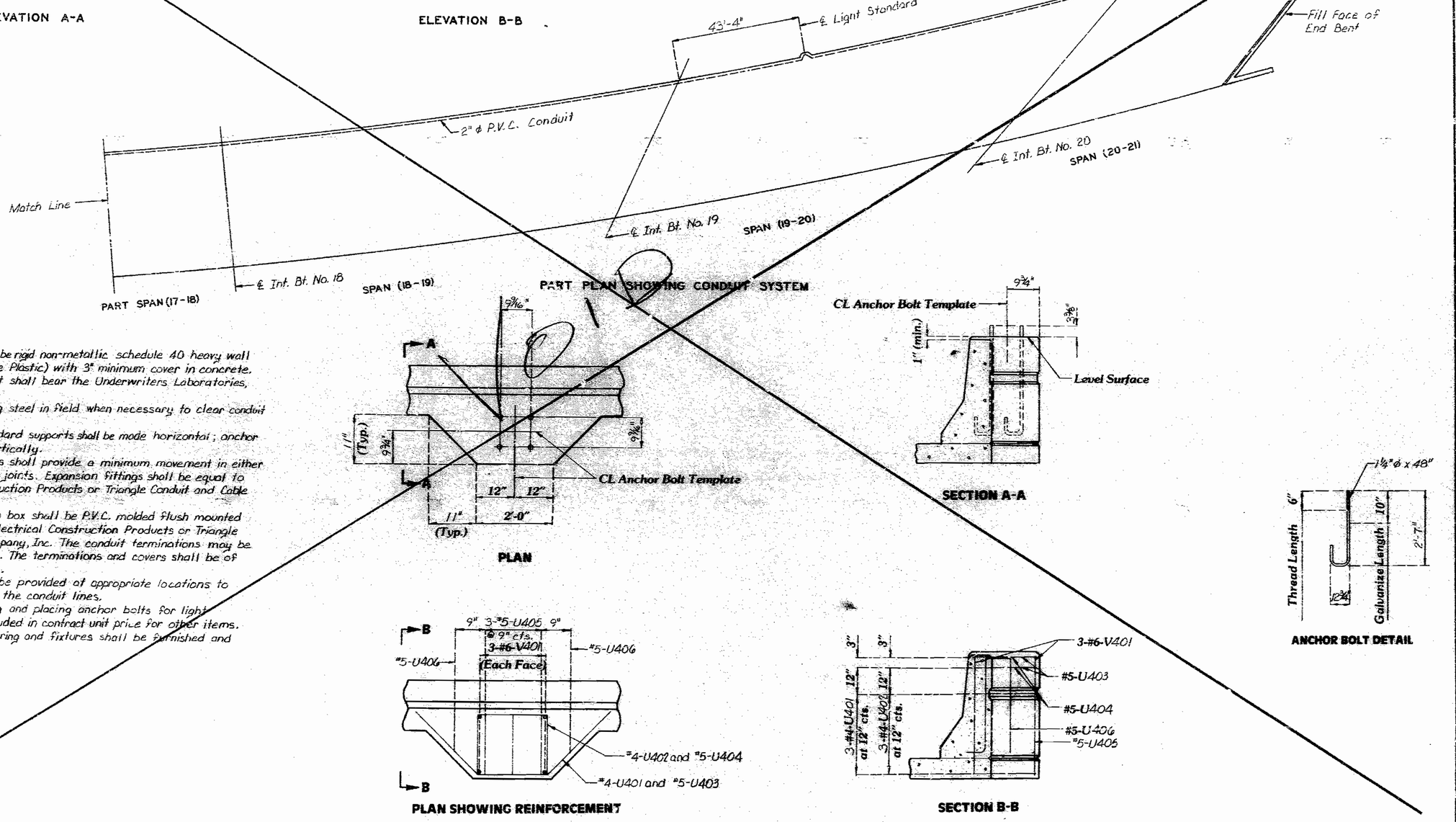

PART PLAN SHOWING CONDUIT SYSTEM

Note : All conduit shall be rigid non-metallic schedule 40 heavy wall P.V.C. (Polyvinyl Chloride Plastic) with 3" minimum cover in concrete. Each section of conduit shall bear the Underwriters Laboratories, Inc., (UL) label .

Shift reinforcing steel in field when necessary to clear conduit and junction boxes.

Top of light standard supports shall be made horizontal ; anchor bolts shall be placed vertically.

Expansion fittings shall provide a minimum movement in either direction of 2" at open joints. Expansion fittings shall be equal to Carlon Electrical Construction Products or Triangle Conduit and Cable Company, Inc.

End bent junction box shall be P.V.C. molded flush mounted and equal to Carlon Electrical Construction Products or Triangle Conduit and Cable Company, Inc. The conduit terminations may be permanent or separable. The terminations and covers shall be of water tight construction.

Weepholes shall be provided at appropriate locations to drain any moisture in the conduit lines.

Cost of furnishing and placing anchor bolts for light standards shall be included in contract unit price for other items.

Light standards, wiring and fixtures shall be furnished and installed by others.

PLAN

SECTION A-A

ANCHOR BOLT DETAIL

PLAN SHOWING REINFORCEMENT

SECTION B-B

LIGHT STANDARD SUPPORTS	Revised
January 1985	

DETAILED June 1989
CHECKED July 1989

Note: This drawing is not to scale. Follow dimensions.

VOID

Sheet No. 71 of 75.

JACKSON COUNTY

A-2733

FOR INFORMATION ONLY

A27331, Sht. 141

COMPLETE BILL OF REINFORCING STEEL

NO. REQD.	MARK NO. SIZE MARK	LOCATION	(E) EPOXY	SHAPE NO.	(S) STIRRUP	(X) SUBSTR.	(V) VARIES	NO. EACH	DIMENSIONS B FT. IN.	C FT. IN.	D FT. IN.	E FT. IN.	F FT. IN.	H FT. IN.	K FT. IN.	NOMINAL LENGTH FT. IN.	ACTUAL LENGTH FT. IN.	WEIGHT LBS.
		END BENT NO 1																
4	6F10	WING BRACE		15					14-000	3 11-500	14-000	10-875	8-750	10-875	8-750	4 4	6 2	37
6	6F11	DIAPH		15					2 2-875	4 8-000				2 2-250	5-750	6 11	6 10	62
4	6F12	WING		15					14-000	4 9-875	14-000	8-750	10-875	8-750	10-875	7 2	7 1	93
6	6F13	DIAPH		21					2 2-875	5 0-000				2 2-250	5-750	7 3	7 0	63
4	6H10	DIAPH		28					42 2-000							42 2	42 2	253
8	6H11	DIAPH		20					2 0-000							2 0	2 0	24
16	6H12	DIAPH		28					6 9-000							6 9	6 9	152
4	6H13	DIAPH	E	20					42 2-000							42 2	42 2	253
5	5H14	DIAPH		23					15-000	2 0-000	15-000	3-250	14-625	3-250	14-625	4 6	4 6	23
1	4H15	APPROACH HAUNCH		28					37 3-000							37 3	37 3	75
8	6H16	WING		28			W	2	12 9-000							12 9	12 9	
		INCR = 21.375 IN							18 1-000							18 1	18 1	185
8	6H17	WING		28					8 8-000							18 8	18 8	224
4	6H18	WING	E	28					18 8-000							18 8	16 8	112
8	6H19	WING		28			W	2	12 0-000							12 0	12 0	
		INCR = 24.000 IN							18 0-000							18 0	18 0	139
2	6T10	WING		23					8 6-750	2 0-000				7 10-500	3 4-250	10 7	10 6	32
2	6T11	WING		23					9 3-250	2 0-000				8 7-125	3 3-125	11 2	11 1	33
30	5U36	DIAPH	E	10	S					4 11-000	2 3-625					32 2	11 11	373
57	4U11	DIAPH	E	19	S				5 0-000	3 10-000						8 10	8 8	262
24	4U12	APPROACH HAUNCH		18	S					17-000	6-000					3 5	3 3	52
18	6V10	WING		20					5 2-000							5 2	5 2	140
16	6V11	WING		28			W	2	2 4-000							2 4	2 4	
		INCR = 5.125 IN							5 4-000							5 4	5 4	92
16	6V12	WING		20					5 1-000							5 1	5 1	122
18	6V13	WING		28			W	2	2 3-000							2 3	2 3	
		INCR = 4.750 IN							5 5-000							5 5	5 5	109
		DIAPH AT INT BTS NO 2 & 3																
32	6H30	DIAPH		28					9-000							6 9	6 5	326
32	6H30	DIAPH		28					7 6-000							7 6	7 6	366
16	5H31	DIAPH		28					3 4-000							3 4	3 4	92
25	5H30	DIAPH		28					4 6-000							4 6	4 6	157
96	4U30	X DIAPH	E	28	S					2 6-000	4 8-000	12-000				2 8	7 0	481
32	4U30	DIAPH	E	28	S					2 2-000	4 8-000	14-000				8 0	7 0	364
40	5U30	DIAPH		19	S				15-000	2 3-000						3 3	3 0	128
16	5U30	DIAPH	E	28					5 2-000							5 2	5 2	88
		DIAPH AT INT BT NO 4																
2	6H30	DIAPH		28					37 7-000							37 7	37 7	115
8	6H31	DIAPH		28					6 7-000							6 7	6 7	79
2	6H32	DIAPH		28					37 7-000							37 7	37 7	58
8	6H33	DIAPH		28					7 4-000							7 4	7 4	35
2	5H34	DIAPH		28					37 7-000							37 7	37 7	78
24	6H35	DIAPH		20					7 4-000							7 4	7 4	598
12	5H36	DIAPH		19	S				10-000	2 10-000						8 8	8 8	45
10	5H31	DIAPH		20					3 4-000							3 4	3 4	42
16	5H38	DIAPH		19	S				9-000	2 3-000						3 0	2 11	49

COMPLETE BILL OF REINFORCING STEEL

NO. REQD.	MARK NO. SIZE MARK	LOCATION	(E) EPOXY	SHAPE NO.	(S) STIRRUP	(X) SUBSTR.	(V) VARIES	NO. EACH	DIMENSIONS B FT. IN.	C FT. IN.	D FT. IN.	E FT. IN.	F FT. IN.	H FT. IN.	K FT. IN.	NOMINAL LENGTH FT. IN.	ACTUAL LENGTH FT. IN.	WEIGHT LBS.
128	6U309	DIAPH	E	10	S		V	32		15-000	2 7-000					5 1	4 9	
		INCR = 6.000 IN								15-009	4 1-000					6 7	6 3	1052
64	4U310	DIAPH	E	10	S					15-000	2 2-000					4 8	4 6	192
8	5V302	DIAPH	E	20					4 2-000							4 2	4 2	35
		DIAPH AT INT BT NO 5																
8	5H303	DIAPH		20					3 4-000							3 4	3 4	28
12	5H304	DIAPH		20					4 8-000							4 8	4 6	56
16	6H305	DIAPH		20					6 7-000							6 7	6 7	158
16	4H306	DIAPH		20					7 4-000							7 4	7 4	78
48	4U301	DIAPH	E	28	S					2 0-000	4 8-000	12-000				7 8	7 6	240
16	6U302	DIAPH	E	28	S					2 2-000	4 8-000	14-000				3 0	7 8	184
20	5U303	DIAPH		19	S				10-000	2 3-000						3 3	3 0	63
8	5V301	DIAPH	E	20					5 2-000							5 2	5 2	43
		DIAPH AT INT BTS NO 6,7,9 & 10																
32	5H303	DIAPH		20					3 4-000							3 4	3 4	111
48	5H304	DIAPH		20					4 6-000							4 6	4 6	225
64	6H307	DIAPH		28					7 0-000							7 0	7 0	629
64	6H308	DIAPH		20					7 10-000							7 10	7 10	335
80	5U303	DIAPH		19	S				10-000	2 3-000						3 1	3 0	258
192	4U306	DIAPH	E	28	S					2 2-000	4 8-000	12-000				7 10	7 8	963
64	6U307	DIAPH	E	28	S					2 4-000	4 8-000	14-000				8 2	7 10	753
32	5V301	DIAPH	E	20					5 2-000							5 2	5 2	172
		DIAPH AT INT BT NO 8																
12	5H309	DIAPH		19	S				10-000	2 10-000						8 8	8 8	45
16	5H310	DIAPH		20					3 4-000							3 4	3 4	43
2	5U30	DIAPH		20					40 0-000							40 0	40 0	120
8	6H30	DIAPH		20					7 0-000							7 0	7 0	84
2	6H30	DIAPH		20					40 0-000							40 0	40 0	53
8	6H31	DIAPH		20					7 10-000							7 10	7 10	42
2	5U30	DIAPH		20					40 0-000							40 0	40 0	83
24	5H31	DIAPH		20					7 10-000							7 10	7 10	639
8	5U30	DIAPH		20	S				24-000	2 5-000						18-750	6-625	33
8	5U30	DIAPH		19	S				9-000	2 5-000						8-500	3-000	33
128	4U31	DIAPH	E	10	S		W	42		19-000	2 7-000					5 5	- -	
		INCR = 6.000 IN								19-009	4 1-000					2 3	6 11	1.86
64	4U312	DIAPH	E	10	S					19-000	2 2-000					9 4	5 2	221
8	5V302	DIAPH	E	20					4 2-000							4 2	4 2	35

STATE MO | PROJ NO | SHEET NO. 77

SHAPE 6 SHAPE 7 SHAPE 8 SHAPE 9

SHAPE 10 SHAPE 11 SHAPE 12 SHAPE 13

SHAPE 14 SHAPE 15

SHAPE 16 SHAPE 17 SHAPE 18 SHAPE 20 SHAPE 19

SHAPE 21 SHAPE 22 SHAPE 23

SHAPE 24 SHAPE 25 SHAPE 26

SHAPE 27 SHAPE 28 SHAPE 29

SHAPE 30 SHAPE 31 SHAPE 32

SHAPE 33

BENDING DIAGRAMS

REVISED	APR. 1989
STD. 90.8	MAY 1974

6d FOR #3 THRU #5
12d FOR #6 OR 2½" MIN.

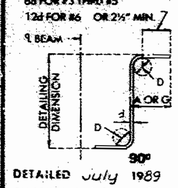

6d OR 2½" MIN.

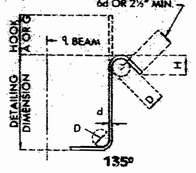

DETAILED July 1989
CHECKED July 1989

STIRRUP HOOK DIMENSIONS

GRADES 40-50-60 KSI

BAR SIZE	D (IN.)	90° HOOK HOOK A OR G	135° HOOK HOOK A OR G	135° HOOK APPRX. H
#3	1½"	4"	4"	2½"
#4	2"	4½"	4½"	3"
#5	2½"	6"	5½"	3½"
#6	4½"	12"	7¾"	4½"

NOTE: UNLESS OTHERWISE NOTED DIAMETER "D" IS THE SAME FOR ALL BENDS AND HOOKS ON A BAR.

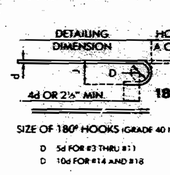

SIZE OF 180° HOOKS (GRADE 40 KSI)
D 5d FOR #3 THRU #11
D 10d FOR #14 AND #18

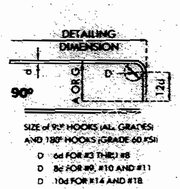

SIZE OF 90° HOOKS (ALL GRADES) AND 180° HOOKS (GRADE 60 KSI)
D 6d FOR #3 THRU #8
D 8d FOR #9, #10 AND #11
D 10d FOR #14 AND #18

BEND DIMENSIONS

BAR SIZE	D (IN.)	180° HOOKS ALL GRADES A OR G	180° HOOKS ALL GRADES J	90° HOOKS ALL GRADES A OR G
#3	2¼"	5"	3"	6"
#4	3"	6"	4"	8"
#5	3¾"	7"	5"	10"
#6	4½"	8"	6"	12"
#7	5¼"	10"	7"	14"
#8	6"	11"	8"	16"
#9	9½"	15"	11¾"	19"
#10	1'-4"	17"	13¼"	22"
#11	12"	19"	14¾"	2'-0"
#14	18¼"	2'-3"	21¾"	2'-7"

NOTES:

ALL STANDARD HOOKS AND BENDS OTHER THAN 180 DEG. TO BE BENT WITH SAME PROCEDURE AS FOR 90 DEG. STD. HOOKS.

HOOKS AND BENDS SHALL BE IN ACCORDANCE WITH THE PROCEDURES AS SHOWN ON THIS SHEET.

E - EPOXY COATED REINFORCEMENT.
S - STIRRUP
X - BAR IS INCLUDED IN SUBSTRUCTURE QUANTITIES.
V - BAR DIMENSIONS VARY IN EQUAL INCREMENTS BETWEEN DIMENSIONS SHOWN ON THIS LINE AND THE FOLLOWING LINE.
NO. EA. - NUMBER OF BARS OF EACH LENGTH.
NOMINAL LENGTHS ARE BASED ON OUT TO OUT DIMENSIONS SHOWN IN BENDING DIAGRAMS AND ARE LISTED FOR FABRICATORS USE (NEAREST INCH).
ACTUAL LENGTHS ARE MEASURED ALONG CENTERLINE BAR TO THE NEAREST INCH.
PAYWEIGHTS ARE BASED ON ACTUAL LENGTHS.

Note: This drawing is not to scale. Follow dimensions.

JACKSON COUNTY

A-2733

COMPLETE BILL OF REINFORCING STEEL

NO. REQD.	SIZE MARK	LOCATION	EPOXY (E)	SHAPE NO.	STIRRUP (S)	SUBSTR. (X)	VARIES (Y)	NO. EACH	B FT. IN.	C FT. IN.	D FT. IN.	E FT. IN.	F FT. IN.	H FT. IN.	K FT. IN.	NOMINAL LENGTH FT. IN.	ACTUAL LENGTH FT. IN.	WEIGHT LBS.
		DIAP AT INT BT																
		NO 11																
8	5H303	DIAPH		20					3 4.000							3 4	3 4	28
12	5H304	DIAPH		20					4 6.000							4 6	4 6	56
16	6H337	DIAPH		20					7 9.000							7 9	7 9	186
16	4H338	DIAPH		20					8 8.000							8 8	8 8	93
48	4U313	DIAPH	E	28	S					2 7.000	4 8.000	12.000				8 3	8 1	259
16	4U314	DIAPH	E	28	S					2 9.000	4 8.000	14.000				8 7	8 3	190
10	5U315	DIAPH		19	S				12.000	2 3.000						3 3	3 2	33
10	5U316	DIAPH		19	S				10.500	2 3.000						3 2	3 0	31
8	5V301	DIAPH	E	20					5 2.000							5 2	5 2	43
		DIAPH AT INT BT																
		NO 12																
16	6H339	DIAPH		20					9 0.000							9 6	9 0	216
16	4H340	DIAPH		20					10 0.000							10 0	10 0	107
8	5H341	DIAPH		23					15.000	2 0.000				10.250	11.000	3 3	3 3	27
12	5H342	DIAPH		23					15.000	2 0.000	15.000	10.250	11.000	10.250	11.000	4 6	4 5	55
10	5U334	DIAPH		19	S				10.500	2 3.000						3 2	3 0	31
48	4U317	DIAPH	E	28	S					2 9.000	4 8.000	12.000				8 5	8 3	265
16	4U318	DIAPH	E	28	S					2 11.000	4 8.000	14.000				8 9	8 5	202
10	5U319	DIAPH		19	S				12.000	2 3.500						3 6	3 5	36
8	5V301	DIAPH	E	20					5 2.000							5 2	5 2	43
		DIAPH AT INT BT																
		NO 13																
2	4H327	DIAPH		20					52 3.000							52 3	52 3	157
8	6H328	DIAPH		20					9 2.000							9 2	9 2	110
4	4H329	DIAPH		20					27 1.000							27 1	27 1	72
8	4H330	DIAPH		20					10 2.000							10 2	10 2	54
2	5H331	DIAPH		20					52 3.000							52 3	52 3	109
26	9H332	DIAPH		20					16 2.000							16 2	16 2	838
12	5H333	DIAPH		23					15.000	2 0.000				10.500	10.750	3 3	3 3	41
18	5H334	DIAPH		23					15.000	2 0.000	15.000	10.500	10.250	10.500	10.750	4 6	4 5	[illegible]
8	5H335	DIAPH		22	S				3 1.000	3 2.000				2 2.375	2 3.[illegible]	8 6	8 10	60
8	5H336	DIAPH		22	S				9.000	3 2.000				6.250	6.500	3 11	3 11	33
128	6U320	DIAPH	E	30	S		Y	3		2 5.375	2 7.000					7 6	7 2	
		INCR = 6.000 IN								2 5.375	4 1.000					9 6	8 8	1500
64	4U32[illegible]	DIAPH	E	30	S					2 3.375	2 2.000					6 9	6 7	287
8	5V302	DIAPH	E	20					4 2.000							4 2	4 2	35
		DIAPH AT INT BT																
		NO 14																
16	6H34[illegible]	DIAPH		20					9 4.000							9 4	9 4	220
16	4H34[illegible]	DIAPH		20					10 4.000							10 4	10 4	110
8	5H345	DIAPH		23					15.000	2 6.000				10.625	10.625	3 3	3 3	27
12	5H346	DIAPH		23					15.000	2 6.000	15.000	10.625	10.625	10.625	10.625	4 6	4 5	55
10	5U3[illegible]	DIAPH		19	S				10.500	2 3.000						3 2	3 0	31

COMPLETE BILL OF REINFORCING STEEL

NO. REQD.	SIZE MARK	LOCATION	EPOXY (E)	SHAPE NO.	STIRRUP (S)	SUBSTR. (X)	VARIES (Y)	NO. EACH	B FT. IN.	C FT. IN.	D FT. IN.	E FT. IN.	F FT. IN.	H FT. IN.	K FT. IN.	NOMINAL LENGTH FT. IN.	ACTUAL LENGTH FT. IN.	WEIGHT LBS.
48	6U320	DIAPH	E	28	S					3 2.000	4 8.000	12.000				8 10	8 8	278
18	6U321	DIAPH	E	28	S					3 4.000	4 8.000	14.000				9 2	8 10	239
5	5U322	DIAPH		21	S				15.375	2 3.000				15.000	3.500	3 6	3 4	17
5	5U323	DIAPH		15	S				15.500	2 3.000				15.000	3.750	3 7	3 6	18
6	5V301	DIAPH	E	20					5 2.000							5 2	5 2	43
		DIAPH AT INT BT																
		NO 15																
26	6H347	DIAPH		20					9 7.000							9 7	9 7	230
16	4H348	DIAPH		20					10 9.000							10 9	10 9	115
6	5H349	DIAPH		23					15.000	2 0.000				11.000	10.250	3 3	3 3	27
12	5H350	DIAPH		23					15.000	2 0.000	15.000	11.000	10.250	11.000	10.250	4 6	4 5	55
10	5U336	DIAPH		19	S				10.500	2 3.000						3 2	3 0	31
50	6U324	DIAPH	E	28	S					3 5.000	4 8.000	12.000				8 11	8 9	292
18	6U325	DIAPH	E	28	S					3 5.000	4 8.000	14.000				9 3	8 11	251
5	5U326	DIAPH		21	S				16.500	2 3.000				16.000	4.000	3 8	3 6	18
5	5U327	DIAPH		15	S				16.375	2 3.000				16.000	3.750	3 7	3 6	18
8	5V301	DIAPH	E	20					5 2.000							5 2	5 2	43
		DIAPH AT INT BT																
		NO 16																
8	5H3[illegible]	DIAPH		20					3 4.000							3 4	3 4	28
12	[illegible]	DIAPH		20					4 6.000							4 6	4 6	41
16	[illegible]	DIAPH		20					7 6.000							7 6	7 6	180
16	[illegible]	DIAPH		20					8 4.000							8 4	8 4	89
10	[illegible]	DIAPH		19	S				10.000	2 3.000						3 1	3 0	31
10	[illegible]	DIAPH		19	S				11.000	2 3.000						3 2	3 3	32
48	[illegible]	DIAPH	E	28	S					2 6.000	4 8.000	12.000				8 3	8 0	257
16	[illegible]	DIAPH	E	28	S					2 8.000	4 8.000	14.000				8 6	8 2	196
8	5V30[illegible]	DIAPH	E	20					5 2.000							5 2	5 2	43
		DIAPH AT INT BT																
		NO 17																
[illegible]	[illegible]	DIAPH		20					37 2.000							37 2	37 2	56
9	[illegible]	DIAPH		20					6 2.000							6 2	6 2	40
1	[illegible]	DIAPH		20					37 2.000							37 2	37 2	25
4	[illegible]	DIAPH		20					7 4.000							7 4	7 4	20
1	[illegible]	DIAPH		20					37 7.000							37 7	37 7	39
32	[illegible]	DIAPH		20					7 4.000							7 4	7 4	299
4	[illegible]	DIAPH		[illegible]					10.000	2 10.000						3 8	3 2	22
9	[illegible]	DIAPH		20					3 4.000							3 4	3 4	31
8	[illegible]	DIAPH		19	S				9.000	2 3.000						3 0	2 11	24
64	[illegible]	DIAPH	E	30	S		Y	16		15.000	2 7.000					5 1	4 9	
		INCR = 6.000 IN								17.000	4 1.000					6 3	6 3	529
32	[illegible]	DIAPH	E	19	S					15.000	2 2.000					4 8	4 6	96
4	[illegible]	DIAPH	E	20					4 2.000							4 2	4 2	17

Two (2) additional #4-U324 are included in bar bill for testing.

STATE	PROJ NO	SHEET NO
MO		73

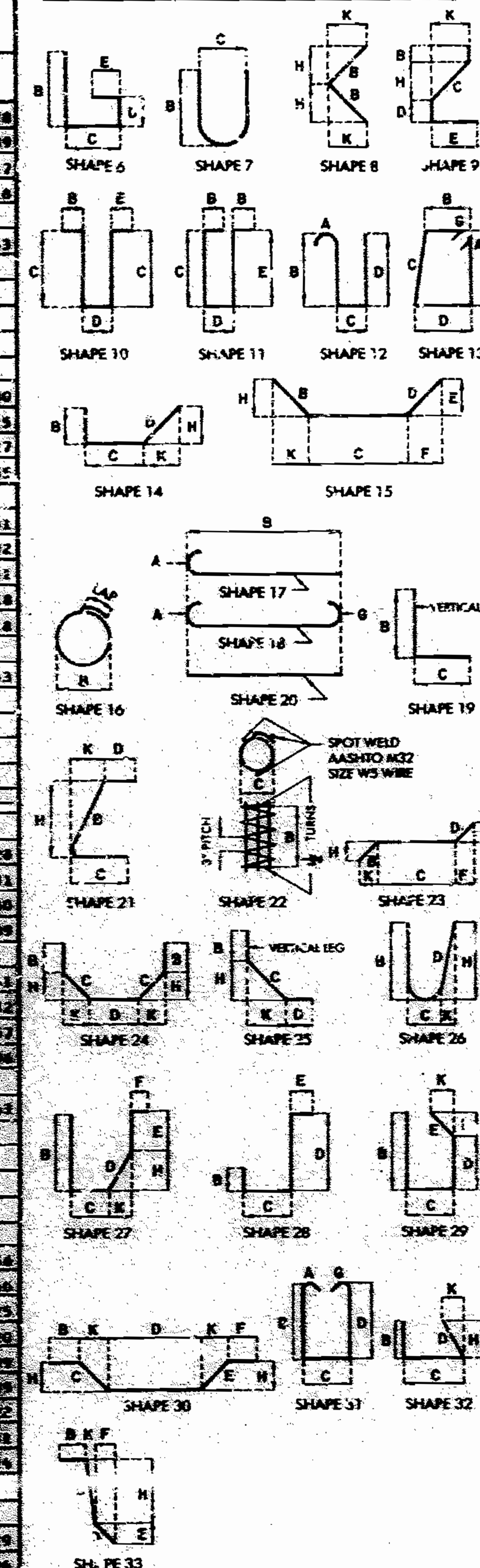

BENDING DIAGRAMS

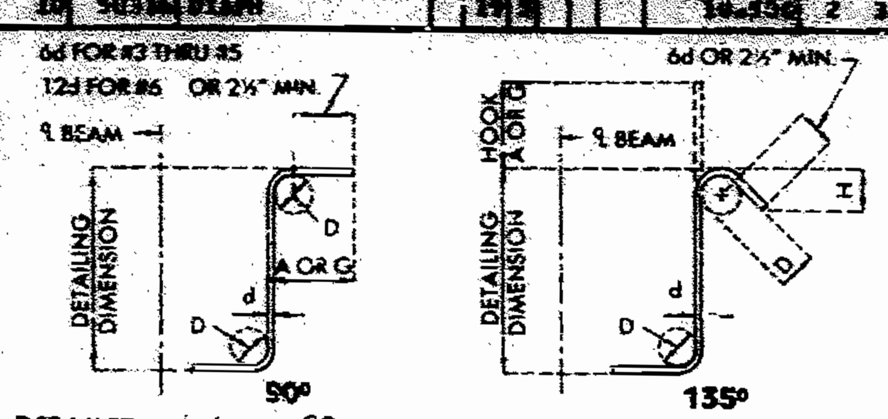

STIRRUP HOOK DIMENSIONS				
GRADES 40-50-60 KSI				
BAR SIZE	D (IN.)	90° HOOK: HOOK A OR G	135° HOOK: HOOK A OR G	135° HOOK: APPROX. H
#3	1½"	4"	4"	2½"
#4	2"	4½"	4½"	3"
#5	2½"	6"	5½"	3¾"
#6	4½"	12"	7¾"	4½"

NOTE: UNLESS OTHERWISE NOTED DIAMETER "D" IS THE SAME FOR ALL BENDS AND HOOKS ON A BAR.

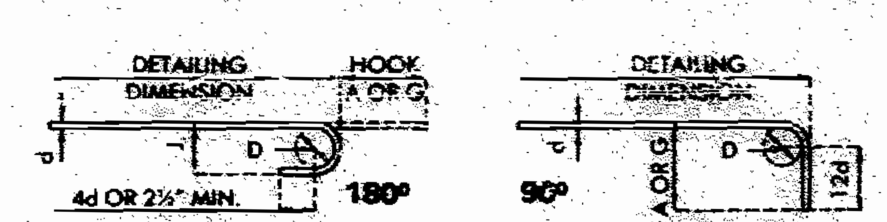

SIZE OF 180° HOOKS (GRADE 40 KSI)
D 5d FOR #3 THRU #11
D 10d FOR #14 AND #18

SIZE of 90° HOOKS (ALL GRADES) AND 180° HOOKS (GRADE 60 KSI)
D 6d FOR #3 THRU #8
D 8d FOR #9, #10 AND #11
D 10d FOR #14 AND #18

BAR SIZE	D (IN.)	180° HOOKS ALL GRADES: A OR G	180° HOOKS ALL GRADES: J	90° HOOKS ALL GRADES: A OR G
#3	2¼"	5"	3"	6"
#4	3"	6"	4"	8"
#5	3¾"	7"	5"	10"
#6	4½"	8"	6"	12"
#7	5¼"	10"	7"	14"
#8	6"	11"	8"	16"
#9	9½"	15"	11¾"	19"
#10	10¾"	17"	13¼"	22"
#11	12"	19"	14¾"	2'-0"
#14	18¼"	2'-3"	21¾"	2'-7"

Note: This drawing is not to scale. Follow dimensions.

NOTES:

ALL STANDARD HOOKS AND BENDS OTHER THAN 180 DEG. TO BE BENT WITH SAME PROCEDURE AS FOR 90 DEG. STD. HOOKS.

HOOKS AND BENDS SHALL BE IN ACCORDANCE WITH THE PROCEDURES AS SHOWN ON THIS SHEET.

E - EPOXY COATED REINFORCEMENT.
S - STIRRUP.
X - BARS INCLUDED IN SUBSTRUCTURE QUANTITIES.
Y - BAR DIMENSIONS VARY IN EQUAL INCREMENTS BETWEEN DIMENSIONS SHOWN ON THIS LINE AND THE FOLLOWING LINE.
NO. EA. - NUMBER OF BARS OF EACH LENGTH.
NOMINAL LENGTHS - ARE BASED ON OUT TO OUT DIMENSIONS SHOWN IN BENDING DIAGRAMS AND ARE LISTED FOR FABRICATORS USE (NEAREST INCH).
ACTUAL LENGTHS - ARE MEASURED ALONG CENTERLINE BAR TO THE NEAREST INCH.
PAYWEIGHTS ARE BASED ON ACTUAL LENGTHS.

STD. 90.8 MAY 1974 | REVISED APR 1980

DETAILED July 1989
CHECKED July 1989

Sheet No. 73 of 75

JACKSON COUNTY

A-2733

FOR INFORMATION ONLY

A27331, Sht. 143

COMPLETE BILL OF REINFORCING STEEL

NO. REQD.	MARK NO. (SIZE MARK)	LOCATION	EPOXY (E)	SHAPE NO.	STIRRUP (S)	SUBSTR. (X)	VARIES (V)	NO. EACH	B (FT. IN.)	C (FT. IN.)	D (FT. IN.)	E (FT. IN.)	F (FT. IN.)	H (FT. IN.)	K (FT. IN.)	NOMINAL LENGTH (FT. IN.)	ACTUAL LENGTH (FT. IN.)	WEIGHT (LBS.)
		2ND BENT NO 21																
1	6H230	BACKWALL	E	15					14.500	45 4.000				12.250	7.750	46 7	46 6	70
1	6H231	BACKWALL	E	15					14.500	44 4.000				12.250	7.750	45 7	45 6	68
1	6H232	BACKWALL	E	15					14.625	28 4.000				12.125	8.125	29 7	29 [illegible]	44
1	6H233	BACKWALL	E	15					14.[illegible]75	29 2.000				12.125	8.125	30 5	30 4	46
3583	5R1	BARRIER CURB	E	19	S				2 6.000	3.500						2 10	2 8	9965
3583	5R2	BARRIER CURB	E	19	S				2 6.125	3.500				2 6.000	3.000	2 10	2 9	10277
3567	5R3	BARRIER CURB	E	19	S				17.000	6.000						23	22	4821
3487	5R4	BARRIER CURB	E	27	S					6.000	11.125	7.000	12.000	9.125	6.375	3 6	2 10	10305
38	5R5	BARRIER CURB	E	27	S					6.000	11.125	15.000		9.125	6.375	2 8	2 7	102
2	5R6	BARRIER CURB	E	20					19 6.000							19 6	19 6	41
32	5R7	BARRIER CURB	E	20					5 0.000							5 0	5 0	167
4	5R8	BARRIER CURB	E	20					19 9.000							19 9	19 9	83
2	5R9	BARRIER CURB	E	20					17 9.000							17 9	17 9	37
8	5R10	BARRIER CURB	E	10	S					2 0.000	6.000					6 4	4 4	36
1	5R11	BARRIER CURB	E	20					25 7.000							25 7	25 7	27
1	5R12	BARRIER CURB	E	20					14 9.000							14 9	14 9	15
3	5R13	BARRIER CURB	E	20					15 0.000							15 0	15 0	47
1	5R14	BARRIER CURB	E	20					13 0.000							13 0	13 0	14
42	5R15	BARRIER CURB	E	22	S					6.000	11.125	2 0.000		9.125	6.375	3 5	3 4	146
8	5R16	BARRIER CURB	E	18	S					2 9.000	6.000					6 [illegible]	5 10	49
24	5R17	BARRIER CURB	E	20					24 10.000							24 10	24 10	622
422	5R18	BARRIER CURB	E	20					9 9.000							9 9	9 9	4293
72	5R19	BARRIER CURB	E	20					31 7.000							31 7	31 7	2372
12	5R20	BARRIER CURB	E	20					30 8.000							30 8	30 8	484
72	5R21	BARRIER CURB	E	20					36 9.000							36 9	36 9	2760
12	5R22	BARRIER CURB	E	20					35 6.000							35 6	35 6	444
1	5R23	BARRIER CURB	E	20					27 4.000							27 4	27 4	29
3	5R24	BARRIER CURB	E	20					27 7.000							27 7	27 7	[illegible]
12	5R25	BARRIER CURB	E	20					24 11.000							24 11	24 11	312
24	5R26	BARRIER CURB	E	20					28 5.000							28 5	28 5	[illegible]
12	5R27	BARRIER CURB	E	20					27 2.000							27 2	27 2	[illegible]
6	5R28	BARRIER CURB	E	20					39 3.000							39 3	39 3	[illegible]
12	5R29	BARRIER CURB	E	20					35 [illegible]							35 [illegible]	35 [illegible]	[illegible]
8	5R30	BARRIER CURB	E	20					38 8.000							38 8	38 8	[illegible]
12	5R31	BARRIER CURB	E	20					25 1.000							25 1	25 1	[illegible]
24	5R32	BARRIER CURB	E	20					34 8.000							34 8	34 8	[illegible]
24	5R33	BARRIER CURB	E	20					37 5.000							37 5	37 5	[illegible]
12	5R34	BARRIER CURB	E	20					33 1.000							33 1	33 1	[illegible]
12	5R35	BARRIER CURB	E	20					36 6.000							36 6	36 6	[illegible]
6	5R36	BARRIER CURB	E	20					38 3.000							38 3	38 3	[illegible]
6	5R37	BARRIER CURB	E	20					37 10.000							37 10	37 10	[illegible]
12	5R38	BARRIER CURB	E	20					26 9.000							26 9	26 9	[illegible]
6	5R39	BARRIER CURB	E	20					33 7.000							33 7	33 7	[illegible]
12	5R40	BARRIER CURB	E	20					36 4.000							36 4	36 4	[illegible]
12	5R41	BARRIER CURB	E	20					30 11.000							30 11	30 11	[illegible]
12	5R42	BARRIER CURB	E	20					36 3.000							36 3	36 3	[illegible]
24	5R43	BARRIER CURB	E	20					35 3.000							35 3	35 3	[illegible]
36	5R44	BARRIER CURB	E	20					28 9.000							28 9	28 9	[illegible]
12	5R45	BARRIER CURB	E	20					32 5.000							32 5	32 5	[illegible]
21	[illegible]	LIGHT SUPPORT	E	15	S				20.500	22.500	20.500	14.500	14.500	14.500	14.500	5 [illegible]	[illegible]	[illegible]
21	[illegible]	LIGHT SUPPORT	E	[illegible]	[illegible]				18.500	22.500	18.500					5 9	5 7	[illegible]
14	[illegible]	LIGHT SUPPORT	E	15	S				20.500	22.500	20.500	[illegible]	14.500	14.500	14.500	5 [illegible]	5 3	77
14	[illegible]	LIGHT SUPPORT	E	21	S				18.500	[illegible]	18.500					5 11	5 8	83
21	[illegible]	LIGHT SUPPORT	E	[illegible]	[illegible]				9.000	2 5.500	14.000					6 10	6 6	142
14	[illegible]	LIGHT SUPPORT	E	10	S				9.000	2 5.500	7.250					[illegible]	[illegible]	88

VOID

COMPLETE BILL OF REINFORCING STEEL

NO. REQD.	MARK NO. (SIZE MARK)	LOCATION	EPOXY (E)	SHAPE NO.	STIRRUP (S)	SUBSTR. (X)	VARIES (V)	NO. EACH	B (FT. IN.)	C	D	E	F	H	K	NOMINAL LENGTH (FT. IN.)	ACTUAL LENGTH (FT. IN.)	WEIGHT (LBS.)
42	[illegible]	LIGHT SUPPORT	E	20					3 5.000							3 3	3 3	205
		CAST-IN-PLACE																
		CONVENTIONAL																
		FORMS (SLAB ON																
		CONCRETE)																
4507	5S1	SLAB	E	20					41 5.000							41 3	41 3	193908
1001	5S2	SLAB	E	20					40 0.000							40 0	40 0	41762
14	5S3	SLAB	E	20			V	1	3 4.000							3 4	3 4	
		INCR = 34.500 IN							40 9.000							40 9	40 9	322
2	5S4	SLAB	E	20			V	1	2 5.000							2 5	2 5	
		INCR = 23.000 IN							40 9.000							40 9	40 9	473
42	5S5	SLAB	E	20			V	1	29 6.000							29 6	29 6	
		INCR = 2.625 IN							38 6.000							38 6	38 6	1489
35	5S6	SLAB	E	20			V	1	31 8.000							31 8	31 8	
		INCR = 3.125 IN							40 8.000							40 8	40 8	1320
64	5S7	SLAB	E	20					18 9.000							18 9	18 9	1252
56	6S8	SLAB	E	20					21 0.000							21 0	21 0	2019
22	5S9	SLAB	E	20			V	1	3 7.000							3 7	3 7	
		INCR = 2[illegible].625 IN							39 8.000							39 8	39 8	496
42	5S10	SLAB	E	20			V	1	15 8.000							15 8	15 8	
		INCR = 4.375 IN							30 8.000							30 8	30 8	1015
33	5S11	SLAB	E	20			V	1	3 1.000							3 1	3 1	
		INCR = 13.750 IN							39 8.000							39 8	39 8	736
35	5S12	SLAB	E	20			V	1	19 0.000							19 0	19 0	
		INCR = 5.250 IN							34 0.000							34 0	34 0	[illegible]
64	6S13	SLAB	E	20					24 2.000							24 2	24 2	2323
64	6S14	SLAB	E	20					16 6.000							16 6	16 6	1586
64	6S15	SLAB	E	20					23 4.000							23 4	23 4	2243
22	5S16	SLAB	E	20			V	1	3 10.000							3 10	3 10	
		INCR = 20.625 IN							39 11.000							39 11	39 11	502
[illegible]	5S17	SLAB	E	20			V	1	3 3.000							3 3	3 3	
		INCR = 2.750 IN							40 2.000							40 2	40 2	1313
[illegible]	5S18	SLAB	E	20					35 2.000							35 2	35 2	[illegible]
42	5S19	SLAB	E	20			[illegible]	1	8 7.000							8 7	8 7	
		INCR = 6.375 IN							30 5.000							30 5	30 5	[illegible]
33	5S20	SLAB	E	20			V	1	2 8.000							2 8	2 8	
		INCR = 15.750 IN							39 4.000							39 4	39 4	723
[illegible]	5S21	SLAB	E	20			V	1	3 0.000							3 0	3 0	
		INCR = 5.[illegible] IN							40 2.000							40 2	40 2	[illegible]
[illegible]	5S22	SLAB	E	20					39 0.000							39 0	39 0	[illegible]
[illegible]	5S23	SLAB	E	20			V	1	[illegible]							12 3	11 3	
		INCR = 2.250 IN							33 1.000							33 1	33 1	[illegible]
64	6S24	SLAB	E	20					23 0.000							23 0	23 0	2213
64	6S25	SLAB	E	20					22 3.000							22 3	22 3	[illegible]
120	5S26	SLAB	E	20					16 0.000							16 0	16 0	2130
57	5S27	SLAB	E	20			V	1	2 11.000							2 11	2 11	
		INCR = 2.750 IN							39 2.000							39 2	39 2	1251
[illegible]	5S28	SLAB	E	20					38 0.000							38 0	38 0	[illegible]
42	5S29	SLAB	E	20			V	1	2 2.000							2 2	2 2	
		INCR = 12.625 IN							43 9.000							43 9	43 9	[illegible]
[illegible]	5S30	SLAB	E	20			V	1	3 3.000							3 3	3 3	
		INCR = 9.250 IN							40 0.000							40 0	40 0	1940
[illegible]	5S31	SLAB	E	20					38 5.000							38 5	38 5	[illegible]
[illegible]	5S32	SLAB	E	20			V	1	2 2.000							2 2	2 2	
		INCR = 15.625 IN							43 9.000							43 9	43 9	[illegible]
[illegible]	5S33	SLAB	E	20					23 3.000							23 3	23 3	[illegible]
64	6S34	SLAB	E	20					19 3.000							19 3	19 3	[illegible]

VOID

Two (2) additional #5-R18 are included in bar bill for testing.

STATE	PROJ NO	SHEET NO.
MO.		79

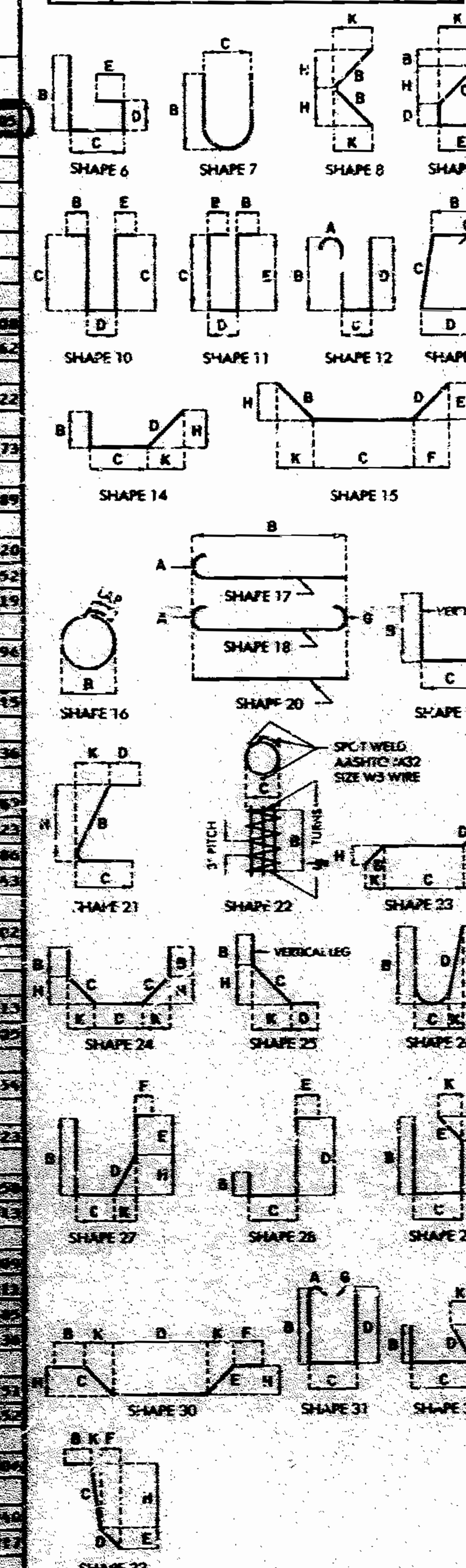

BENDING DIAGRAMS

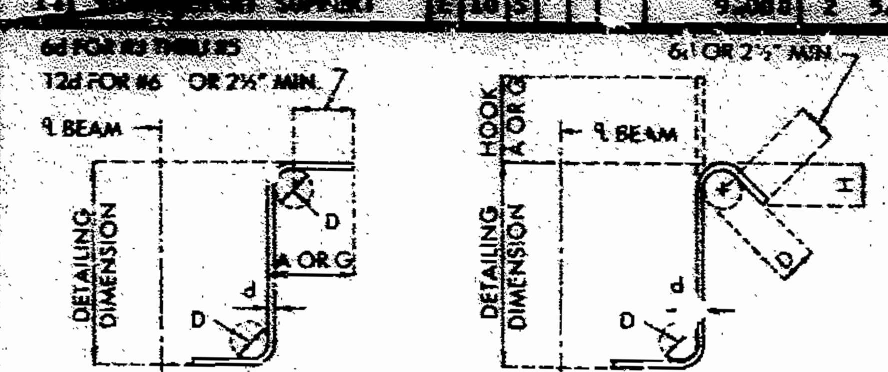

STIRRUP HOOK DIMENSIONS				
GRADES 40-50-60 KSI				
BAR SIZE	D (IN.)	90° HOOK: HOOK A OR G	135° HOOK: HOOK A OR G	135° HOOK: APPROX. H
#3	1½"	4"	4"	2½"
#4	2"	4½"	4½"	3"
#5	2½"	6"	5½"	3¾"
#6	4½"	12"	7¾"	4½"

NOTE: UNLESS OTHERWISE NOTED DIAMETER "D" IS THE SAME FOR ALL BENDS AND HOOKS ON A BAR.

Note: This drawing is not to scale. Follow dimensions.

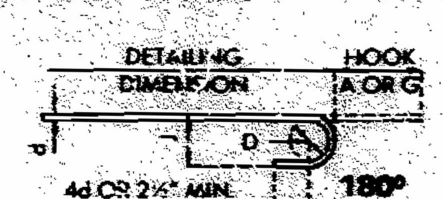

SIZE OF 180° HOOKS (GRADE 40 KSI)
D = 5d FOR #3 THRU #11
D = 10d FOR #14 AND #18

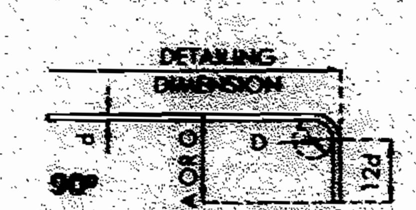

SIZE of 90° HOOKS (ALL GRADES) AND 180° HOOKS (GRADE 60 KSI)
D = 6d FOR #3 THRU #8
D = 8d FOR #9, #10 AND #11
D = 10d FOR #14 AND #18

[illegible]				
BAR SIZE	D (IN.)	180° HOOKS ALL GRADES: A OR G	180° HOOKS ALL GRADES: J	90° HOOKS ALL GRADES: A OR G
#3	2¼"	5"	3"	6"
#4	3"	6"	4"	8"
#5	3¾"	7"	5"	10"
#6	4½"	8"	6"	12"
#7	5¼"	10"	7"	14"
#8	6"	11"	8"	16"
#9	9½"	15"	11¾"	19"
#10	10¾"	17"	13¼"	22"
#11	12"	19"	14¾"	2'-0"
#14	18¼"	2'-3"	21¾"	2'-7"

Sheet No. 74 of 75

NOTES:

ALL STANDARD HOOKS AND BENDS OTHER THAN 180 DEG. TO BE BENT WITH SAME PROCEDURE [illegible] 90 DEG. STD. HOOKS.

HOOKS AND BENDS SHALL BE IN ACCORDANCE WITH THE PROCEDURES AS SHOWN ON THIS SHEET.

E - EPOXY COATED REINFORCEMENT.
S - STIRRUP.
X - BAR IS INCLUDED IN SUBSTRUCTURE QUANTITIES.
V - BAR DIMENSIONS VARY IN EQUAL INCREMENTS BETWEEN DIMENSIONS SHOWN ON THIS LINE AND THE FOLLOWING LINE.
NO. EA. - NUMBER OF BARS OF EACH LENGTH.
NOMINAL LENGTHS - ARE BASED ON OUT TO OUT DIMENSIONS SHOWN IN BENDING DIAGRAMS AND ARE LISTED FOR FABRICATORS USE. (NEAREST INCH)
ACTUAL LENGTHS - ARE MEASURED ALONG CENTERLINE BAR TO THE NEAREST INCH.
PAY WEIGHTS ARE BASED ON ACTUAL LENGTHS.

JACKSON COUNTY

A-2733

STD. 90.8	REVISED
MAY 1974	APR 1989

DETAILED July 1989
CHECKED July 1989

COMPLETE BILL OF REINFORCING STEEL

NO. REQD.	MARK NO. SIZE MARK	LOCATION	EPOXY (E)	SHAPE NO.	STIRRUP (S)	SUBSTR. (X)	VARIES (V)	NO. EACH	B FT. IN.	C FT. IN.	D FT. IN.	E FT. IN.	F FT. IN.	H FT. IN.	K FT. IN.	NOMINAL LENGTH FT. IN.	ACTUAL LENGTH FT. IN.	WEIGHT LBS.
44	6335	SLAB	E	20					17 5.000							17 5	17 5	1674
126	5861	SLAB	E	19	S				6.?30	2 6.000						3 0	2 11	383
		PRECAST PANEL																
		FORM (SLAB OR																
		CONCRETE)																
2794	551	SLAB	E	20					41 3.000							41 3	41 3	1623
21	556	SLAB	E	20			V	1	2 5.?30							2 5	2 5	
		INCR = 23.000 IN							50 ?.000							40 5	40 9	473
33	5511	SLAB	E	20			V	1	3 1.000							3 1	3 1	
		INCR = 13.750 IN							39 8.000							39 8	39 8	736
33	5520	SLAB	E	20			V	1	2 8.000							2 8	2 8	
		INCR = 13.350 IN							35 4.000							39 4	39 4	723
87	5521	SLAB	E	20			V	1	3 0.000							3 0	3 0	
		INCR = 5.125 IN							40 2.000							40 2	40 2	[illegible]
46	5530	SLAB	E	20			V	1	3 3.000							3 3	3 3	
		INCR = 5.250 IN							45 0.000							40 0	40 0	3950
2370	[illegible]	SLAB	E	20					3 [illegible]							[illegible]	[illegible]	[illegible]
56	[illegible]	SLAB	E	20					[illegible]							[illegible]	[illegible]	[illegible]
135	[illegible]	SLAB	E	2?					[illegible]							[illegible]	[illegible]	[illegible]
95	[illegible]	SLAB	E	20			V	1	[illegible]							[illegible]	[illegible]	[illegible]
		INCR = 3.125 IN							[illegible]							[illegible]	[illegible]	[illegible]
[illegible]	[illegible]	SLAB	E	20					[illegible]							[illegible]	[illegible]	[illegible]
[illegible]	[illegible]	SLAB	[illegible]	[illegible]					[illegible]							[illegible]	[illegible]	[illegible]
[illegible]	[illegible]	SLAB	[illegible]	[illegible]					[illegible]							[illegible]	[illegible]	[illegible]
[illegible]	[illegible]	SLAB	[illegible]	[illegible]					[illegible]							[illegible]	[illegible]	[illegible]
[illegible]	[illegible]	SLAB	[illegible]	[illegible]					[illegible]							[illegible]	[illegible]	[illegible]
		INCR = 5.000 IN							[illegible]							[illegible]	[illegible]	[illegible]
[illegible]	[illegible]	[illegible]	[illegible]	[illegible]					[illegible]							[illegible]	[illegible]	[illegible]
[illegible]	[illegible]	[illegible]	[illegible]	[illegible]					[illegible]							[illegible]	[illegible]	[illegible]
[illegible]	[illegible]	[illegible]	[illegible]	[illegible]					[illegible]							[illegible]	[illegible]	[illegible]
[illegible]	[illegible]	[illegible]	[illegible]	[illegible]					[illegible]							[illegible]	[illegible]	[illegible]
[illegible]	[illegible]	[illegible]	[illegible]	[illegible]					[illegible]							[illegible]	[illegible]	[illegible]
[illegible]	[illegible]	[illegible]	[illegible]	[illegible]					[illegible]							[illegible]	[illegible]	[illegible]
		INCR = [illegible] IN							[illegible]							[illegible]	[illegible]	[illegible]
[illegible]	[illegible]	SLAB	[illegible]	[illegible]					[illegible]							[illegible]	[illegible]	[illegible]
[illegible]	[illegible]	SLAB	[illegible]	[illegible]					[illegible]							[illegible]	[illegible]	[illegible]
[illegible]	[illegible]	SLAB	[illegible]	[illegible]					[illegible]							[illegible]	[illegible]	[illegible]
[illegible]	[illegible]	SLAB	[illegible]	[illegible]					[illegible]							[illegible]	[illegible]	[illegible]
[illegible]	[illegible]	SLAB	[illegible]	[illegible]					[illegible]							[illegible]	[illegible]	[illegible]
		INCR = [illegible] IN							[illegible]							[illegible]	[illegible]	[illegible]
[illegible]	[illegible]	SLAB	[illegible]	[illegible]					[illegible]							[illegible]	[illegible]	[illegible]
[illegible]	[illegible]	SLAB	[illegible]	[illegible]					[illegible]							[illegible]	[illegible]	[illegible]
[illegible]	[illegible]	SLAB	[illegible]	[illegible]					[illegible]							[illegible]	[illegible]	[illegible]
[illegible]	[illegible]	SLAB	[illegible]	[illegible]					[illegible]	2 [illegible]						[illegible]	[illegible]	[illegible]
		CAST-IN-PLACE [illegible]																
		[illegible]																
		[illegible]																
		[illegible]																
		[illegible]																
[illegible]	5582	SLAB	E	20					41 [illegible]							41 [illegible]	[illegible]	[illegible]
95	5565	SLAB	E	20			V	1	25 0.000							[illegible]	[illegible]	
		INCR = 2.500 IN							30 11.000							[illegible]	[illegible]	[illegible]

COMPLETE BILL OF REINFORCING STEEL

NO. REQD.	MARK NO. SIZE MARK	LOCATION	EPOXY (E)	SHAPE NO.	STIRRUP (S)	SUBSTR. (X)	VARIES (V)	NO. EACH	B FT. IN.	C FT. IN.	D FT. IN.	E FT. IN.	F FT. IN.	H FT. IN.	K FT. IN.	NOMINAL LENGTH FT. IN.	ACTUAL LENGTH FT. IN.	WEIGHT LBS.
42	5564	SLAB	E	20			V	1	5 0.000							5 0	5 ?	
		INCR = 10.250 IN							47 0.000							48 0	48 ?	[illegible]
504	5565	SLAB	E	2?					50 0.000							48 0	48 0	23027
42	5566	SLAB	E	20			V	1	16 0.000							16 0	[illegible] 0	
		INCR = 4.?25 IN							33 4.000							33 [illegible]	33 [illegible]	1695
137	5567	SLAB	E	20			V	1	2 6.000							2 8	2 8	
		INCR = 3.250 IN							40 0.000							40 0	40 0	3048
35	5568	SLAB	E	20			V	1	5 0.000							5 0	5 0	
		INCR = 12.375 IN							40 0.000							40 0	40 0	321
455	5569	SLAB	E	20					37 0.000							37 [illegible]	37 0	17599
35	5570	SLAB	E	20			V	1	22 9.000							22 9	22 9	
		INCR = 5.750 IN							38 11.000							38 11	38 11	1126
65	5571	SLAB	E	20					29 3.000							29 3	29 3	2562
[illegible]	6572	SLAB	E	20					58 4.000							58 4	58 6	5607
66	[illegible]	SLAB	E	20					26 6.000							26 6	26 6	2623
[illegible]	[illegible]	SLAB	E	20					53 ?.000							53 1	53 1	5303
[illegible]	[illegible]	SLAB	E	20					26 10.000							26 10	26 10	7387
[illegible]	[illegible]	SLAB	E	20					49 7.000							49 7	49 7	4366
32	[illegible]	SLAB	E	20					15 5.000							15 5	15 5	515
[illegible]	[illegible]	SLAB	E	14	S					3 2.000	6 6.000					13 6	13 4	890
		END OF BAR LIST																

STATE	PROJ NO	SHEET NO.
MO.		80

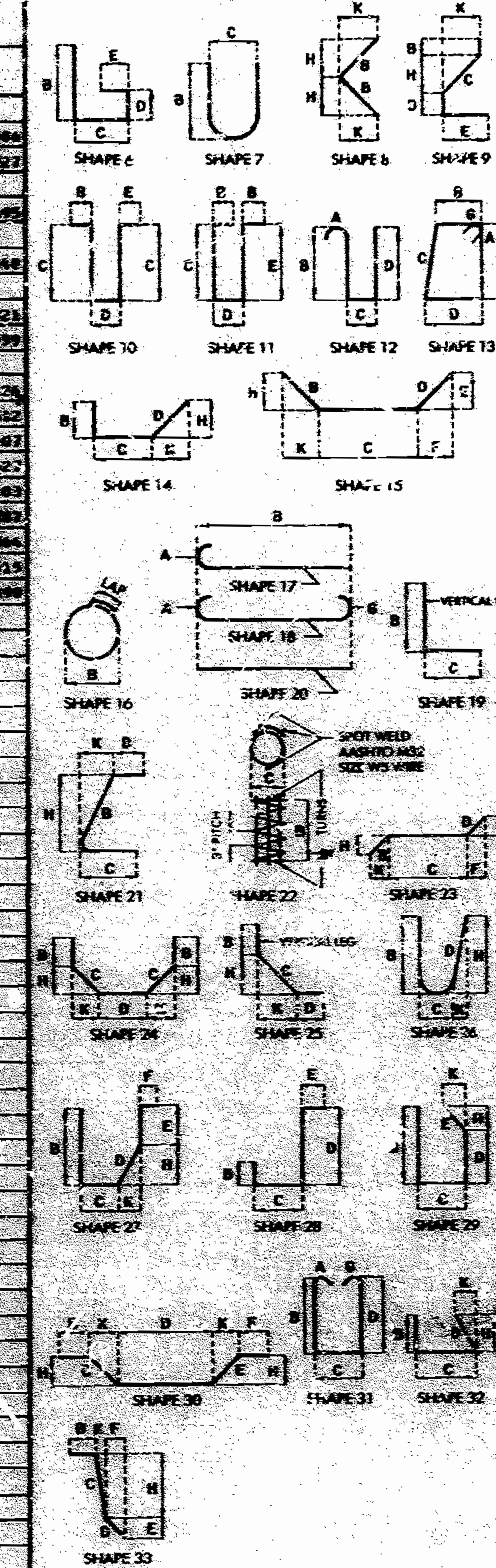

BENDING DIAGRAMS

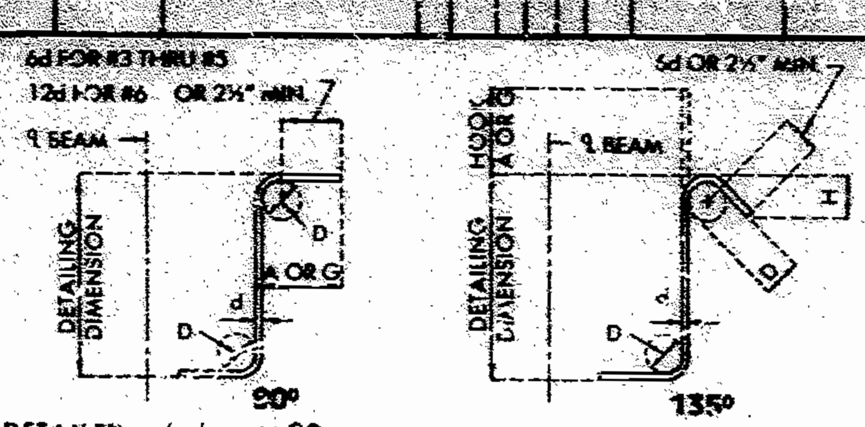

STIRRUP HOOK DIMENSIONS GRADES 40-50-60 KSI				
BAR SIZE	D (IN.)	90° HOOK: HOOK A OR G	135° HOOK: HOOK A OR G	135° HOOK: APPROX. H
#3	1½"	4"	4"	2½"
#4	2"	4½"	4½"	3"
#5	2½"	6"	5½"	3¾"
#6	4½"	12"	7¾"	4½"

NOTE: UNLESS OTHERWISE NOTED DIAMETER "D" IS THE SAME FOR ALL BENDS AND HOOKS ON A BAR.

Note: This drawing is not to scale. Follow dimensions.

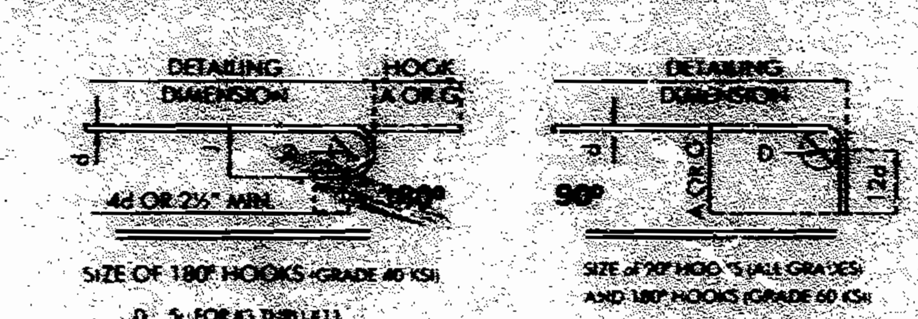

Two (2) additional #7-573 & #7-560 are included in bar bill for testing.

BAR SIZE	D (IN.)	180° HOOKS ALL GRADES: A OR G	180° HOOKS ALL GRADES: J	90° HOOKS ALL GRADES: A OR G
#3	2¼"	5"	3"	6"
#4	3"	6"	4"	8"
#5	3¾"	7"	5"	10"
#6	4½"	8"	6"	12"
#7	5¼"	10"	7"	14"
#8	6"	11"	8"	16"
#9	9½"	15"	11¾"	19"
#10	10¾"	17"	13¼"	22"
#11	12"	19"	14¾"	2'-0"
#14	18¼"	2'-3"	21¾"	2'-7"

Sheet No. 75 of 75

NOTES:

ALL STANDARD HOOKS AND BENDS OTHER THAN 180 DEG. TO BE BENT USING SAME PROCEDURE AS FOR 90 DEG. STD. HOOKS.

HOOKS AND BENDS SHALL BE IN ACCORDANCE WITH THE PROCEDURES AS SHOWN ON THIS SHEET.

E - EPOXY COATED REINFORCEMENT.
S - STIRRUP.
X - BAR IS INCLUDED IN SUBSTRUCTURE QUANTITIES.
V - BAR DIMENSIONS VARY IN EQUAL INCREMENTS BETWEEN DIMENSIONS SHOWN ON THIS LINE AND THE FOLLOWING LINE.
NO. EA. - NUMBER OF BARS OF EACH LENGTH.
NOMINAL LENGTHS - ARE BASED ON OUT TO OUT DIMENSIONS SHOWN IN BENDING DIAGRAMS AND ARE LISTED FOR FABRICATORS USE (NEAREST INCH).
ACTUAL LENGTHS - ARE MEASURED ALONG CENTERLINE BAR TO THE NEAREST INCH.
PAYWEIGHTS ARE BASED ON ACTUAL LENGTHS.

STD. 90.8	REVISED
MAY 1974	APR 1988

DETAILED July 1989
CHECKED July 1989

JACKSON COUNTY

A-2733

MISSOURI HIGHWAY AND TRANSPORTATION COMMISSION

STATE	PROJ NO.	SHEET NO.
MO	4-U-71-2E	6
SEC/SUR 22	TWP 48N	RGE 33W

FINAL PLANS

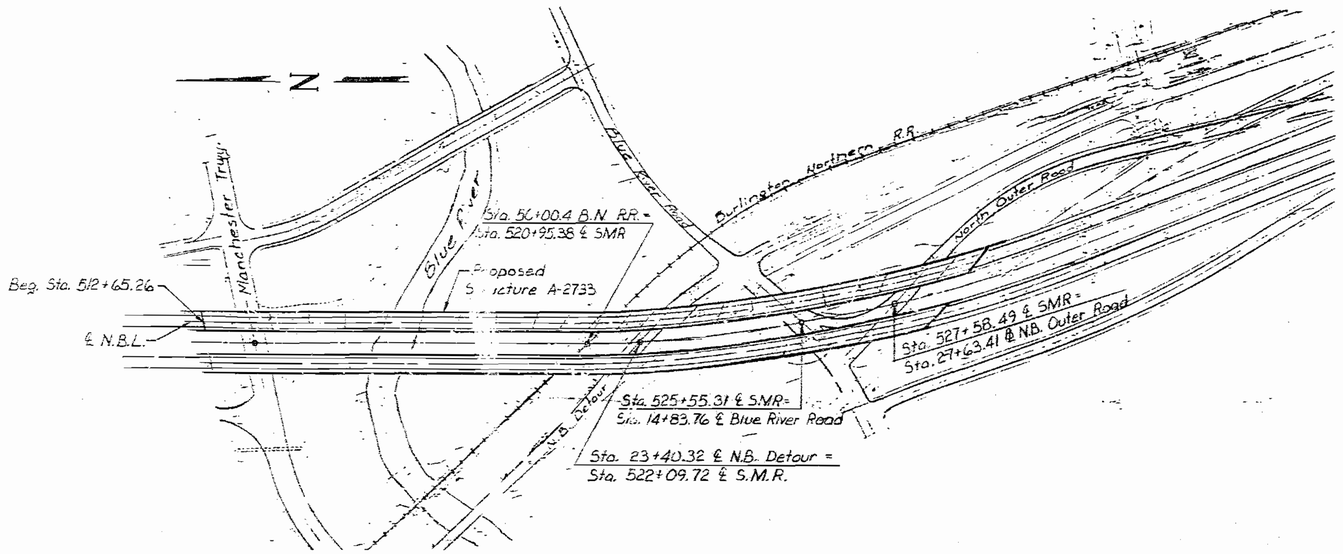

LOCATION SKETCH

BRIDGE NO. A-2733
OVER
MANCHESTER TRAFFICWAY, BLUE RIVER, BURLINGTON NORTHERN RR, N.B. DETOUR, BLUE RIVER ROAD & NORTH OUTER ROAD

SUPERSTRUCTURE CONTRACT

INDEX OF DRAWINGS

1 INDEX OF DRAWINGS
2 PART PLAN & ELEVATION
3 PART PLAN & ELEVATION
4 PART PLAN & ELEVATION
5 PART PLAN & ELEVATION
6 QUANTITIES & GENERAL NOTES
7 END BENT NO. 1
8 BEARING LOCATION
9 BEARING LOCATION
10 BEARING LOCATION
11 BEARING LOCATION
12 END BENT NO. 21
13 VERTICAL DRAIN AT END BENTS
14 EARTHQUAKE RESTRAINERS
15 EARTHQUAKE RESTRAINERS
16 EARTHQUAKE RESTRAINERS & BEARING ALIGNMENT
17 BEARINGS (LAMINATED NEOPRENE)
18 BEARINGS (PTFE)
19 DETAILS OF STEEL DIAPH. (P/S I-GIRDER SPANS)
20 LOCATION OF STEEL DIAPH. (P/S I-GIRDER SPANS)
21 LOCATION OF STEEL DIAPH. (P/S I-GIRDER SPANS)
22 ELEVATION OF P/S GIRDERS - SPAN (1-2)
23 ELEVATION OF P/S GIRDERS - SPANS (2-3),(6-7) & (9-10)
24 ELEVATION OF P/S GIRDERS - SPAN (3-4)
25 ELEVATION OF P/S GIRDERS - SPAN (3-4)
26 ELEVATION OF P/S GIRDERS - SPAN (4-5)
27 ELEVATION OF P/S GIRDERS - SPAN (5-6)
28 ELEVATION OF P/S GIRDERS - SPAN (5-6)
29 ELEVATION OF P/S GIRDERS - SPANS (7-8) & (8-9)
30 ELEVATION OF P/S GIRDERS - SPANS (10-11) & (11-12)
31 ELEVATION OF P/S GIRDERS - SPAN (12-13)
32 ELEVATION OF P/S GIRDERS - SPAN (13-14)
33 ELEVATION OF P/S GIRDERS - SPAN (14-15)
34 ELEVATION OF P/S GIRDERS - SPANS (15-16) & (16-17)
35 ELEVATION OF P/S GIRDERS - SPANS (15-16) & (16-17)
36 ELEVATION OF P/S GIRDERS - SPANS (15-16) & (16-17)
37 DETAILS OF DIAPH. AT BENTS
38 DETAILS OF DIAPH. AT BENTS
39 DETAILS OF DIAPH. AT BENTS
40 PLAN OF STRUCTURAL STEEL
41 ELEVATION OF GIRDERS
42 ELEVATION OF GIRDERS
43 CURVE GIRDER OFFSETS
44 PART LONGITUDINAL SECTION & SUPERELEVATION TRANSITION
45 FIELD SPLICE
46 MISC. STR. STEEL & STEEL DIAPH.
47 STEEL DIAPH., DEAD LOAD DEFLECTION & CAMBER DIAGRAM
48 SLAB CURVE ORDINATES (P/S I-GIRDER SPANS)
49 SLAB CURVE ORDINATES (PLATE GIRDER SPANS)
50 SLAB REINFORCEMENT
51 SLAB REINFORCEMENT
52 SLAB REINFORCEMENT
53 SLAB REINFORCEMENT
54 SLAB REINFORCEMENT
55 SLAB HAUNCHING & CAMBER DIAGRAM (P/S GIRDER)
56 DETAILS OF PRECAST PRESTRESSED PANEL
57 EXP. JT. (BT. NO. 4)
58 EXP. JT. (BT. NO. 8)
59 EXP. JT. (BT. NO. 13)
60 EXP. JT. (BT. NO. 17)
61 EXP. JT. (BT. NO. 21)
62 SLAB DRAINS (P/S GIRDER SPANS)
63 SLAB DRAINS (PLATE GIRDER SPANS)
64 LEFT BARRIER CURB
65 LEFT BARRIER CURB
66 RIGHT BARRIER CURB
67 RIGHT BARRIER CURB
68 BARRIER CURB AT BENT NO. 1
69 BARRIER CURB AT BENT NO. 21
70 CONDUIT SYSTEM — DELETE : 9-22-89
71 CONDUIT SYSTEM — DELETE : 9-22-89
72 BAR LIST
73 BAR LIST
74 BAR LIST
75 BAR LIST

B.M.

STATE ROAD SOUTH MIDTOWN ROADWAY
IN KANSAS CITY

PROJECT NO. STA. 512+65.26 (N.B.L.)

JOB NO. 4-U-71-2E RTE. 71 (N.B.L.)

JACKSON COUNTY

DATE 8/18/89

STD.
STD. 706.35
A-2733

DESIGNED April 1989
DETAILED July 1989
CHECKED July 1989

Note: This drawing is not to scale. Follow dimensions.

Sheet No. 1A of 75

STATE	PROJ. NO.	SHEET NO.
MO.	4-U-71-2E	7

FINAL PLANS

(6 1'-82'-82') Prestressed Concrete I-Girder Spans

(4 @ 82') Prestressed Concrete I-Girder Spans

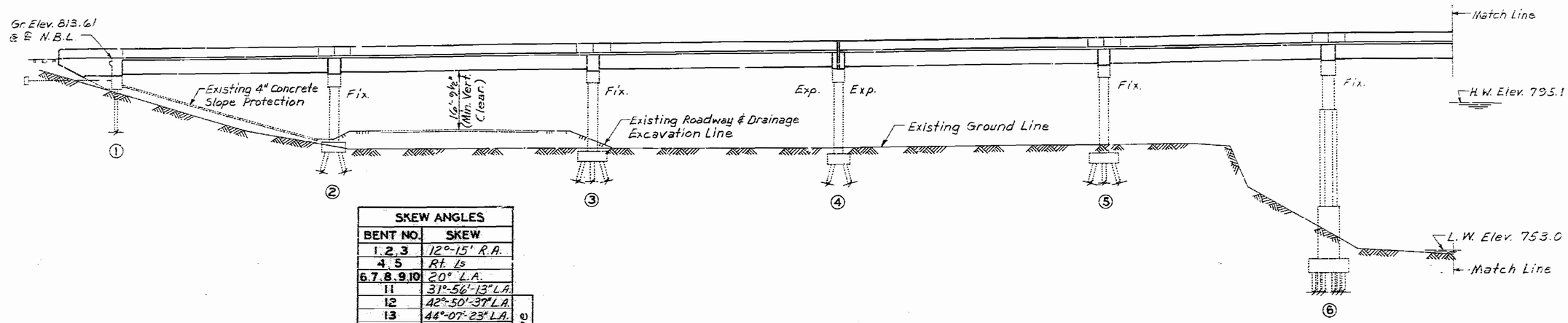

PART GENERAL ELEVATION

SKEW ANGLES	
BENT NO.	SKEW
1, 2, 3	12°-15' R.A.
4, 5	Rt. Ls
6, 7, 8, 9, 10	20° L.A.
11	31°-56'-13" L.A.
12	42°-50'-37" L.A.
13	44°-07'-23" L.A.
14	45°-07'-06" L.A.
15	46°-54'-21" L.A.
16	28°-11'-36" L.A.
17, 18	Radial
19	36°-11'-18" L.A.
20	55°-24'-52" L.A.
21	56°-30'-09" L.A.

To Radial Line

Note: Skew angles are measured at ℄ N.B.L..

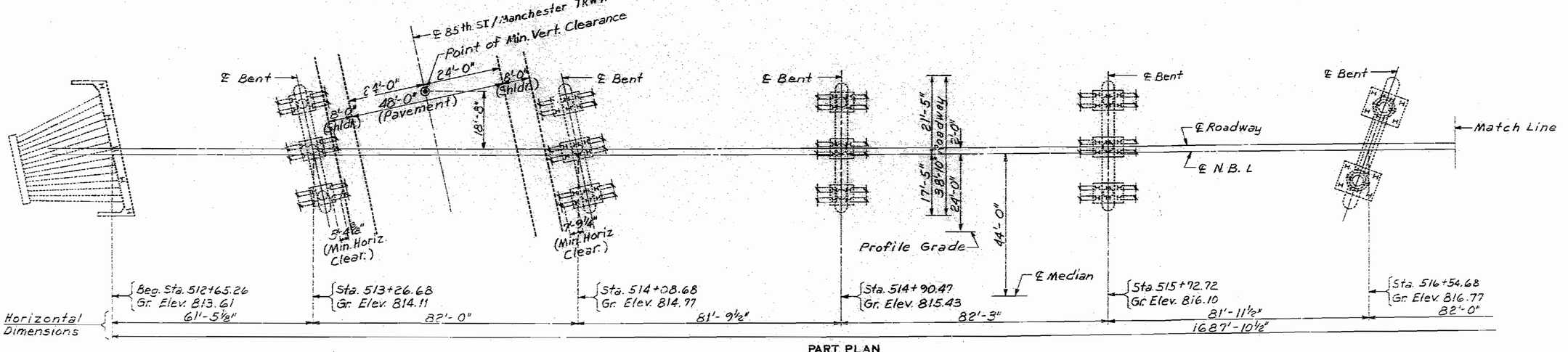

PART PLAN

Note: For General Notes and Estimated Quantities see Sheet No. 6
Stations shown are along ℄ Median.
Grade Elevations shown are along ℄ N.B. Lane.

DETAILED JUNE 1989
CHECKED July 1989

Note: This drawing is not to scale. Follow dimensions.

JACKSON COUNTY A-2733

STATE	PROJ. NO.	SHEET NO.
MO	4-41-71-2E	8

FINAL PLANS

(82'-82'-63'-63'-63') Prestressed Concrete I-Girder Spans

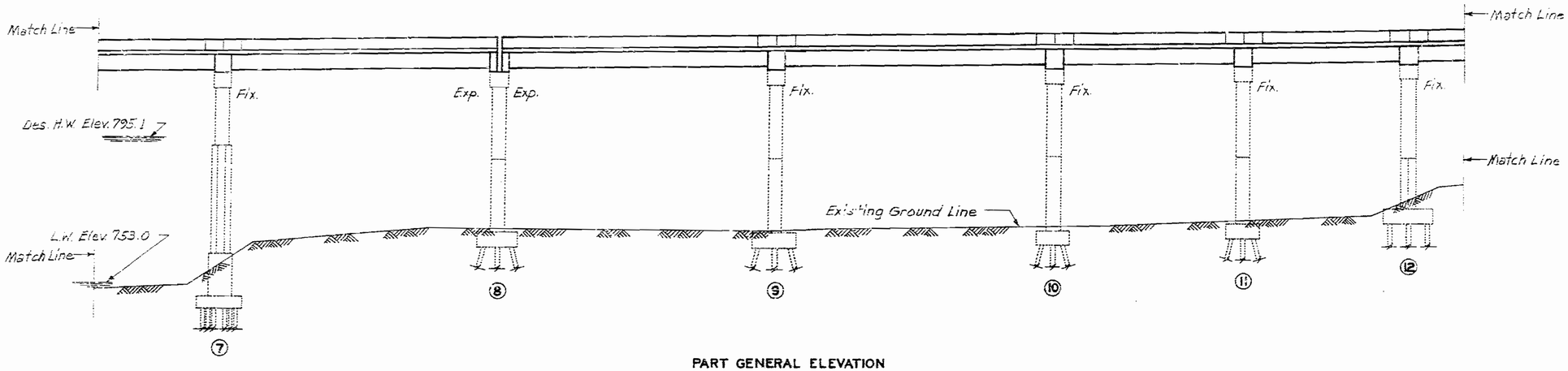

PART GENERAL ELEVATION

S.M.R. CURVE DATA

P.I. Sta. = 526+15.81
Δ = 22°-06'-46"
D = 2°-00'-00"
R = 2864.79'
L = 1105.64'
T = 559.79'
E = 54.18'
S.E. = Varies

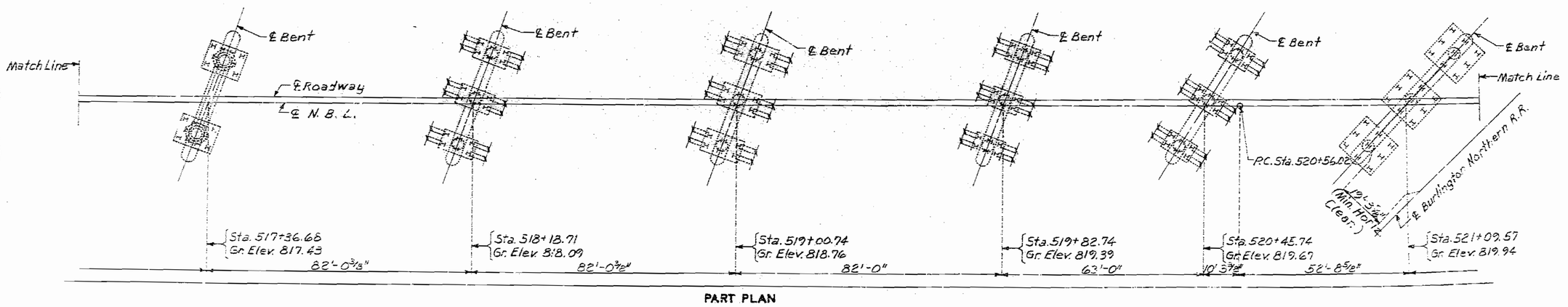

PART PLAN

DETAILED JUNE 1989
CHECKED July 1989

Note: This drawing is not to scale. Follow dimensions.

JACKSON COUNTY

A-2733

STATE	PROJ. NO.	SHEET NO.
MO.	.4-W-71-2E	46

FINAL PLANS

* Indicates 2 spaces at 12" with 4 studs per unit.

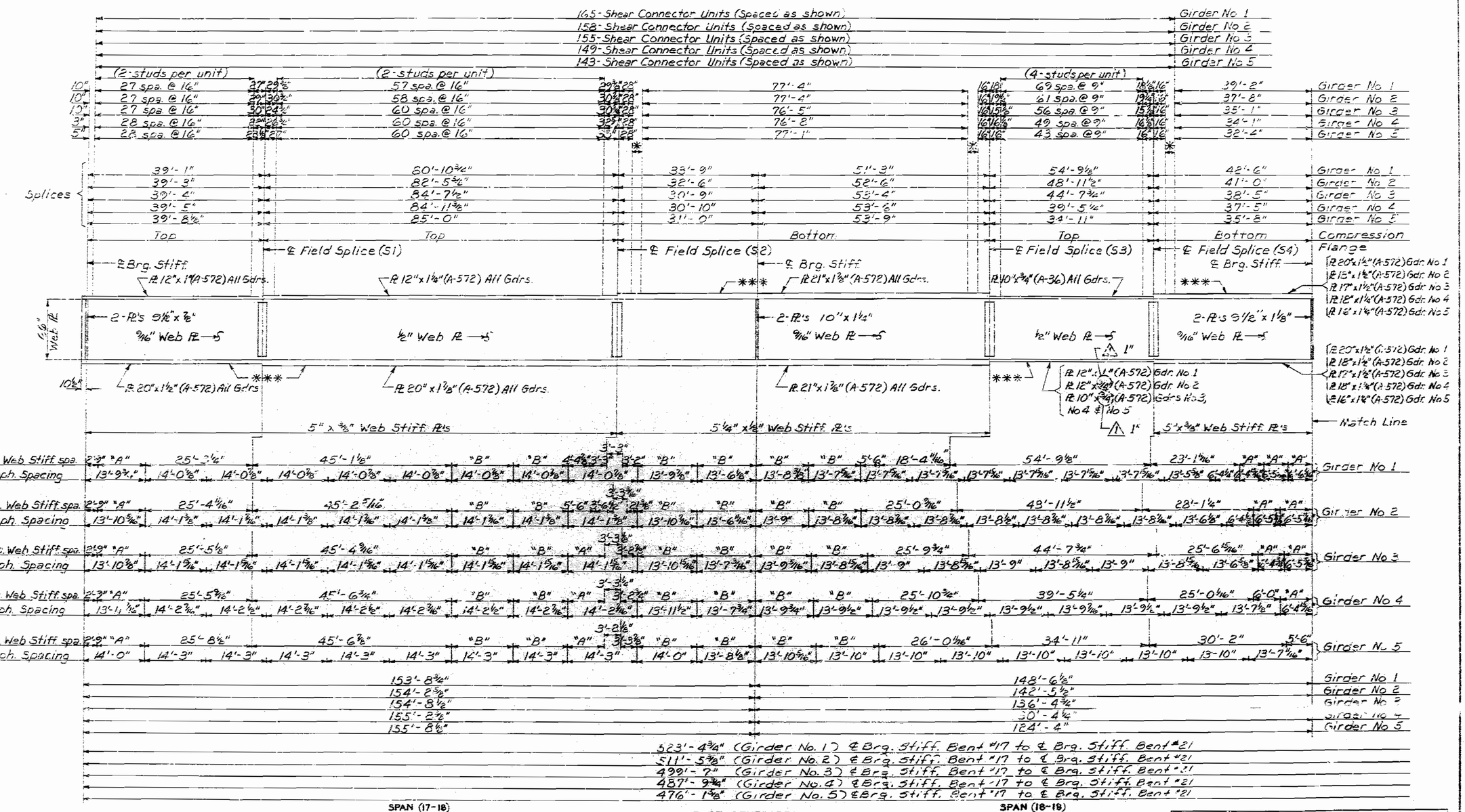

PART DEVELOPED ELEVATION OF GIRDERS

Note: Work this sheet with sheet No. 42.

TRANSVERSE WEB STIFFENER SPACING	
	EQUAL SPACES BETWEEN DIAPH.
A	Indicates 2 Equal Spaces
B	Indicates 3 Equal Spaces

DETAILED JUNE 1988
CHECKED July 1989

Note: This drawing is not to scale. Follow dimensions.

Sheet No. 41 of 75 ⚠ Revised Dec. 6, 1989

JACKSON COUNTY

A-2733

STATE	PROJ NO	SHEET NO
MO	4-U-71-2E	47

FINAL PLANS

* Indicates 2 spaces at 12" with 4 studs per unit.

Girder No 1 — 115 - Shear Connector Units (Spaced as shown)
Girder No 2 — 115 - Shear Connector Units (Spaced as shown)
Girder No 3 — 113 - Shear Connector Units (Spaced as shown)
Girder No 4 — 116 - Shear Connector Units (Spaced as shown)
Girder No 5 — 112 - Shear Connector Units (Spaced as shown)

		(2 studs per unit)			(2 studs per unit)	
Girder No 1	32'-10"	16" 16½"	82 spa. @ 12"	16½" 16"	66'-10"	5" 5⅜" 20 spa. @ 16" 6"
Girder No 2	27'-5⅛"	16" 19¾"	81 spa. @ 12"	19¾" 16"	62'-8"	5" 5⅜" 23 spa. @ 16" 3½"
Girder No 3	25'-4⅛"	16" 16½"	78 spa. @ 12"	16½" 16"	60'-2"	5" 5⅜" 24 spa. @ 16" 7"
Girder No 4	22'-2"	16" 20⅜"	79 spa. @ 12"	20⅜" 16"	52'-11"	5" 5⅜" 26 spa. @ 16" 6¾"
Girder No 5	19'-5"	16" 21½"	74 spa. @ 12"	21½" 16"	53'-4"	5" 5⅜" 27 spa @ 16" 4½"

						Splices
Girder No 1	36'-2"	84'-9"	27'-6"	45'-1"	27'-7⅞"	
Girder No 2	30'-9½"	84'-3½"	27'-3"	41'-2"	31'-2⅜"	
Girder No 3	28'-8⅛"	80'-8½"	27'-0"	38'-11"	33'-2½"	
Girder No 4	25'-6"	82'-4⅝"	22'-7"	36'-1"	35'-8⅛"	
Girder No 5	22'-9"	79'-6⅛"	24'-4"	34'-9"	36'-6⅛"	
Compression Flange	Bottom	Top	Bottom	Bottom	Top	

Pl 20"x1½" (A-572) Gdr. No 1
Pl 18"x1½" (A-572) Gdr. No 2
Pl 17"x1½" (A-572) Gdr. No 3
Pl 18"x1¼" (A-572) Gdr. No 4
Pl 16"x1¼" (A-572) Gdr. No 5

℄ Brg. Stiff. ***

℄ Field Splice (55)

Pl 10"x¾" (A-36) All Gdrs.

℄ Field Splice (56)
℄ Brg. Stiff. ***

Pl 16"x1½" (A-572) Gdr. No 1
Pl 15"x1½" (A-572) Gdr. No 2
Pl 16"x1⅛" (A-572) Gdr. No 3
Pl 15"x1¼" (A-572) Gdr. No 4
Pl 14"x1⅛" (A-572) Gdr. No 5

℄ Shop Flange Splice (Top & Bott.)
℄ Brg. Stiff. ***
Pl 10"x¾" (A-36) All Gdrs.

2-Pl's 9½" x 1⅛"
⅝" Web Pl

½" Web Pl

½" Web Pl

2-Pl's 7½" x 1½"
½" Web Pl

½" Web Pl
6¾" Web Pl

(Girder No. 1 & 5) 1-Pl 4½" x ⅝"
1-Bent Pl 8⅝" x ⅜"
(Girder No. 2, 3 & 4) 2-Bent Pl's 8½" x ⅜"

Pl 20"x1½" (A-572) Gdr. No 1
Pl 18"x1½" (A-572) Gdr. No 2
Pl 17"x1⅜" (A-572) Gdr. No 3
Pl 18"x1⅛" (A-572) Gdr. No 4
Pl 16"x1¼" (A-572) Gdr. No 5

Match Line

***

Pl 16"x1" (A-572) Gdr. No 1
Pl 15"x1" (A-572) Gdr. No 2
Pl 14"x1" (A-572) Gdr. No 3
Pl 13"x1" (A-572) Gdr. No 4
Pl 12"x1" (A-572) Gdr. No 5

***

Pl 16"x1½" (A-572) Gdr. No 1
Pl 15"x1½" (A-572) Gdr. No 2
Pl 16"x1⅛" (A-572) Gdr. No 3
Pl 15"x1¼" (A-572) Gdr. No 4
Pl 14"x1⅛" (A-572) Gdr. No 5

***

2"

Pl 10"x⅜" (A-36) All Gdrs.

5"x⅜" Web Stiff Pl's

4½"x⅜" Web Stiff Pl's

Girder No. 1	"B" 13'-5⅝"	"B" 14'-3⅝"	7'-11⅞" 3'-2"	"B" 14'-3⅞"	40'-6⅝" 14'-3⅜"	14'-3⅜"	14'-3⅜"	14'-3⅜"	11'-10⅝"	"A" 12'-6⅜"	"A" 2'-7" 12'-8⅛"	"B" 12'-10½"	"B" 13'-0½"	"B" 13'-5"	"B" 13'-0⅛"	18'-7⅞" 13'-2⅛"	24'-10⅞" 13'-4⅞"	2'-9" 19'-9⅛"	Transverse Web Stiff spa. Diaph. Spacing
Girder No 2	"A" 6'-6⅝"	"B" 13'-10⅝"	10'-4⅝" 3'-11¾"	"B" 14'-4⅝"	43'-1⅛" 14'-4⅜"	14'-4⅜"	14'-4⅜"	14'-4⅜"	11'-11"	"A" 12'-6⅜"	"A" 2'-6⅜" 12'-8⅜"	"B" 12'-8⅜"	"B" 12'-10⅜"	"B" 13'-0⅜"	"B" 13'-5½"	19'-3⅝" 13'-0⅜"	28'-5⅞" 13'-2¾"	2'-9" 13'-4⅞"	Transverse Web Stiff spa. Diaph. Spacing
Girder No 3	"A" 6'-5⅝"	"A" 6'-6⅜"	"B" 13'-11⅜" 20⅜" 3'-1½"	"A" 14'-4⅝"	"B" 43'-2¾" 14'-4⅝"	14'-4⅝"	14'-4⅝"	14'-4⅝"	11'-1⅜"	"A" 2'-4⅜" 12'-7⅛"	19¾" "A" 12'-7⅛"	"B" 12'-9⅛"	"B" 12'-11⅛"	"B" 13'-1⅛"	"B" 13'-6⅛"	12'-10⅜" 13'-⅛"	30'-5⅛" 13'-3⅛"	2'-9" 6'-2⅛"	Transverse Web Stiff spa. Diaph. Spacing
Girder No 4	"A" 6'-5⅜"	"A" 6'-6⅛"	12'-6½" 4'-0⅞" 6'-6⅝"	"C" 13'-11⅜"	"B" 43'-4⅜" 14'-5⅛"	14'-5⅛"	14'-5⅛"	14'-5⅛"	11'-5⅛"	"B" 12'-0⅝"	2'-0⅝" "A" 12'-7⅝"	"B" 12'-9⅝"	"B" 12'-9⅜"	"B" 12'-11⅜"	"B" 13'-1⅝"	10'-3½" 13'-6⅜"	32'-11½" 13'-1⅝"	2'-9" 6'-2½"	Transverse Web Stiff spa. Diaph. Spacing
Girder No 5	"A" 6'-5⅛"	13'-0⅝" 6'-5⅝"	3'-3½" 6'-6⅜"	"B" 6'-7⅛"	43'-6" 14'-0⅜"	14'-6"	14'-6"	14'-6"	14'-6"	"B" 14'-6"	2'-2¾" 3'-3⅛" "A" 14'-6"	"B" 12'-0¾"	"B" 12'-8⅛"	"B" 12'-10⅜"	"B" 13'-0⅛"	9'-2⅜" 13'-2⅛"	33'-11⅞" 13'-7"	2'-9" 6'-2½"	Transverse Web Stiff spa. Diaph. Spacing

Girder No 1	142'-5"	72'-8⅜"
Girder No 2	142'-4⅜"	72'-4⅞"
Girder No 3	136'-4⅝"	72'-1½"
Girder No 4	130'-5⅝"	71'-9½"
Girder No 5	124'-7⅜"	71'-5⅛"

523'-4¾" (Girder No. 1) ℄ Brg. Stiff. Bent #17 to ℄ Brg. Stiff. Bent #21
511'-5⅓" (Girder No. 2) ℄ Brg. Stiff. Bent #17 to ℄ Brg. Stiff. Bent #21
499'-7" (Girder No. 3) ℄ Brg. Stiff. Bent #17 to ℄ Brg. Stiff. Bent #21
487'-9¾" (Girder No. 4) ℄ Brg. Stiff. Bent #17 to ℄ Brg. Stiff. Bent #21
476'-1⅜" (Girder No. 5) ℄ Brg. Stiff. Bent #17 to ℄ Brg. Stiff. Bent #21

3 SPAN (19-20) — SPAN (20-21)

PART DEVELOPED ELEVATION OF GIRDERS

Note: Fabricated structural steel shall be A36, except as noted.

Plate girders shall be fabricated to conform with Camber Diagram shown on Sheet No. 49.

Transverse Web Stiffeners shall be oriented as shown in Plan of Structural Steel on Sheet No 40.

All web plates shall be subject to notch toughness requirements.

*** Indicates Flange Plates subject to notch toughness requirements.

For details of shear connectors see Sheet No. 45.

Diaphragm Connection Plates are the same size as Transverse Web Stiffeners

Intermediate web stiffener plate and diaphragm spacing may vary from plan dimensions by a maximum of 3" for diaphragm to connect to intermediate web stiffener plate.

Longitudinal dimensions are arc dimensions along centerline girder parallel to grade ⚠ at top of web.

For clipping details at Bent No. 21 see Sheet No. 46.

TRANSVERSE WEB STIFFENER SPACING	
	EQUAL SPACES BETWEEN DIAPH.
A	Indicates 2 Equal Spaces
B	Indicates 3 Equal Spaces

DETAILED JUNE 1988
CHECKED July 1989

Note: This drawing is not to scale. Follow dimensions.

Sheet No. 42A of 75 ⚠ Revised Dec. 6, 1989

JACKSON COUNTY

A-2733

STATE	PROJ. NO.	SHEET NO
MO.	4-U-71-2E	50

FINAL PLANS

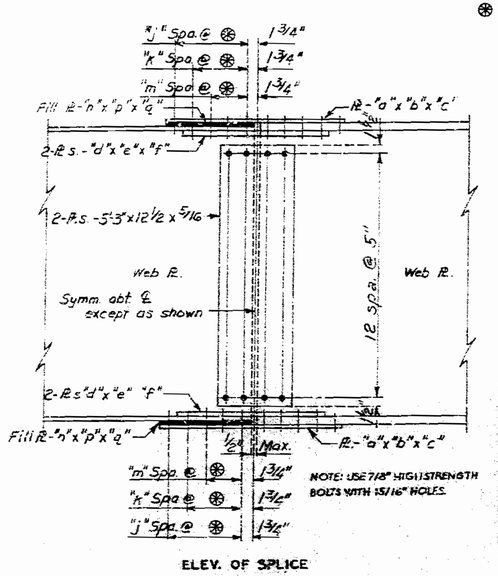

ELEV. OF SPLICE

⊛ 3" for Type A & C
3½" for Type B & D

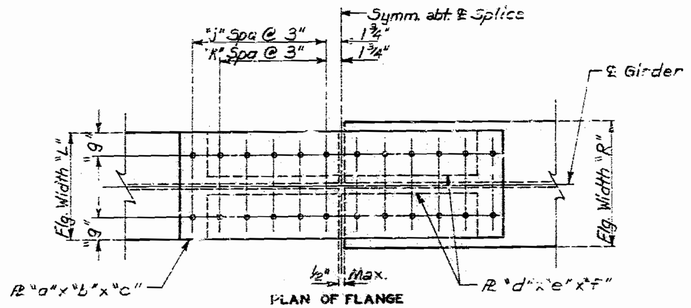

PLAN OF FLANGE
(TYPE A)

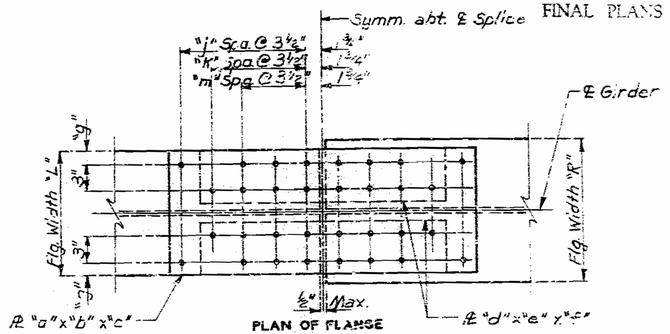

PLAN OF FLANGE
(TYPE B)

⚠ TABLE A

Splice No.	Girder No.	Location	"b"	"c"	"e"	"f"	"j"	"k"	"p"	"q"
S3	2	Bott.	3/4"	3'-0½"	3/4"	2'-6½"	5	4	1/2"	18"
S3	3,4&5	Bott.	3/4"	2'-6½"	7/8"	2'-0½"	4	3	1/2"	15"
S4	2	Bott.	3/4"	3'-0½"	3/4"	2'-6½"	5	4	1/2"	18"
S4	3	Bott.	3/4"	2'-6½"	7/8"	2'-0½"	4	3	1/2"	15"
S4	4	Bott.	3/4"	2'-6½"	7/8"	2'-0½"	4	3	1/2"	15"
S4	5	Bott.	3/4"	2'-6½"	7/8"	2'-0½"	4	3	1/4"	15"

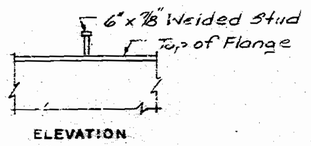

ELEVATION

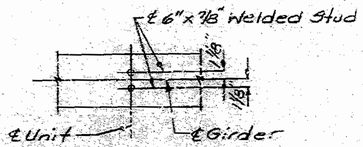

PLAN OF STUD CONN.
(2 studs per unit)

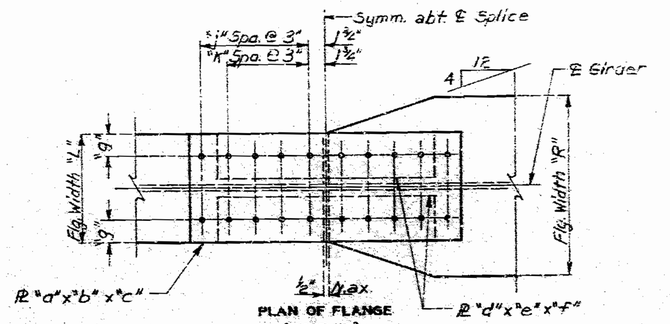

PLAN OF FLANGE
(TYPE C)

TABLE OF DIMENSIONS

	Splice No.	Girder No.	Location	"a"	"b"	"c"	"d"	"e"	"f"	"g"	"j"	"k"	"m"	"n"	"p"	"q"	Flg. Width "L"	Flg. Width "R"
TYPE A	S1	All	Top	12"	3/4	3'-0½"	5"	3/4"	2'-6½"	2½"	5	4	–	12"	¼"	18"	12"	12"
	S6	4	Bott.	13"	3/4"	3'-6½"	5½"	3/4"	3'-0½"	2¾"	6	5	–	13"	¼"	21"	13"	15"
	S6	5	Bott.	12"	3/4"	3'-0½"	5"	3/4"	2'-6½"	2½"	5	4	–	12"	¼"	18"	12"	14"
TYPE B	S1	All	Bott.	20"	1¼"	5'-½"	9"	1⅛"	5'-2½"	3"	8	8	6	20"	⅜"	2'-7"	20"	20"
	S2	All	Bott.	20"	1½"	6'-4½"	9"	1⅜"	5'-3½"	3"	10	9	?	–	–	–	20"	21"
	S6	1	Bott.	16"	⅛"	2'-10½"	7"	1"	2'-10½"	2"	4	4	2	16"	½"	17"	16"	16"
	S6	2	Bott.	15"	⅛"	2'-10½"	6½"	1"	2'-3½"	1¾"	4	3	2	15"	½"	17"	15"	15"
	S6	3	Bott.	14"	⅛"	2'-10½"	6"	1"	2'-3½"	1½"	4	3	2	14"	½"	17"	14"	16"
TYPE C	S2	All	Top	12"	1"	4'-0½"	5"	⅛"	3'-6½"	2½"	7	6	–	12"	⅜"	2'-0"	12"	21"
	S3	All	Top	10"	⅜"	18½"	4"	½"	18½"	2"	2	2	–	10"	1½"	9"	10"	21"
	S3	1	Bott.	12"	¾"	3'-0½"	5"	¾"	2'-6½"	2½"	5	4	–	12"	⅜"	18"	12"	21"
	S3	2	Bott.	12"	⅜"	2'-6½"	5"	½"	2'-0½"	2½"	4	3	–	12"	1½"	15"	12"	21"
	S3	3,4&5	Bott.	10"	⅜"	2'-0½"	4"	⅝"	18½"	2"	3	2	–	10"	1½"	12"	12"	21"
	S4	1	Top	10"	⅜"	18½"	4"	½"	18½"	2"	2	2	–	10"	¾"	9"	10"	20"
	S4	2	Top	10"	⅜"	18½"	4"	½"	18½"	2"	2	2	–	10"	⅜"	9"	10"	18"
	S4	3	Top	10"	⅜"	18½"	4"	½"	18½"	2"	2	2	–	10"	⅜"	9"	10"	17"
	S4	4	Top	10"	⅜"	18½"	4"	½"	18½"	2"	2	2	–	10"	½"	9"	10"	18"
	S4	5	Top	10"	⅜"	18½"	4"	½"	18½"	2"	2	2	–	10"	½"	9"	10"	16"
	S4	1	Bott.	12"	¾"	3'-0½"	5"	¾"	2'-6½"	2½"	5	4	–	12"	⅜"	18"	12"	20"
	S4	2	Bott.	12"	⅝"	2'-6½"	5"	½"	2'-0½"	2½"	4	3	–	12"	⅜"	15"	12"	18"
	S4	3	Bott.	10"	⅝"	2'-0½"	4"	⅝"	18½"	2"	3	2	–	10"	¾"	12"	10"	17"
	S4	4	Bott.	10"	⅝"	2'-0½"	4"	⅝"	18½"	2"	3	2	–	10"	½"	12"	10"	18"
	S4	5	Bott.	10"	⅝"	2'-0½"	4"	⅝"	18½"	2"	3	2	–	10"	½"	12"	10"	16"
	S5	1	Top	10"	⅝"	18½"	4"	½"	18½"	2"	2	2	–	10"	¾"	9"	10"	20"
	S5	2	Top	10"	⅝"	18½"	4"	½"	18½"	2"	2	2	–	10"	¾"	9"	10"	18"
	S5	3	Top	10"	⅝"	18½"	4"	½"	18½"	2"	2	2	–	10"	¾"	9"	10"	17"
	S5	4	Top	10"	⅝"	18½"	4"	½"	18½"	2"	2	2	–	10"	½"	9"	10"	18"
	S5	5	Top	10"	⅝"	18½"	4"	½"	18½"	2"	2	2	–	10"	½"	9"	10"	16"
	S5	4	Bott.	13"	⅝"	3'-6½"	5½"	¾"	3'-0½"	2¾"	6	5	–	13"	½"	21"	13"	18"
	S5	5	Bott.	12"	¾"	3'-0½"	5"	¾"	2'-6½"	2½"	5	4	–	12"	½"	18"	12"	16"
TYPE D	S6	1	Top	10"	⅜"	18½"	4"	½"	18½"	2"	2	2	–	10"	¾"	9"	10"	16"
	S6	2	Top	10"	⅜"	18½"	4"	½"	18½"	2"	2	2	–	10"	¾"	9"	10"	15"
	S6	3	Top	10"	⅜"	18½"	4"	½"	18½"	2"	2	2	–	10"	½"	9"	10"	16"
	S6	4	Top	10"	⅜"	18½"	4"	½"	18½"	2"	2	2	–	10"	½"	9"	10"	15"
	S6	5	Top	10"	⅜"	18½"	4"	½"	18½"	2"	2	2	–	10"	½"	9"	10"	14"
	S5	1	Bott.	16"	⅛"	2'-10½"	7"	1"	2'-10½"	2"	4	4	2	16"	½"	17"	16"	20"
	S5	2	Bott.	15"	⅛"	2'-10½"	6½"	1"	2'-3½"	1¾"	4	3	2	15"	½"	17"	15"	18"
	S5	3	Bott.	14"	⅛"	2'-10½"	6"	1"	2'-3½"	1½"	4	3	2	14"	½"	17"	14"	17"

⚠ Revise dimensions shown in Table A

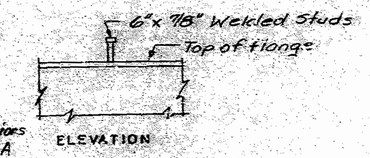

ELEVATION

PLAN OF STUD CONN.
(4 studs per unit)

PLAN OF SHEAR CONNECTORS

Note: Weight of 3938 lbs. of shear connectors is included in weight of Fabricated Structural Carbon Steel.

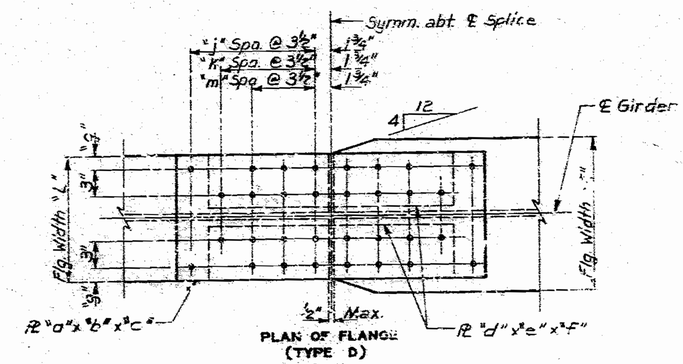

PLAN OF FLANGE
(TYPE D)

DETAILED JULY 1986
CHECKED July 1989

Note: This drawing is not to scale. Follow dimensions.

Sheet No. 45A of 75 ⚠ Revised Dec. 6, 1989

JACKSON COUNTY

A-2733

STATE	PROJ. NO.	SHEET NO.
MO.	A-U-71-2E	51

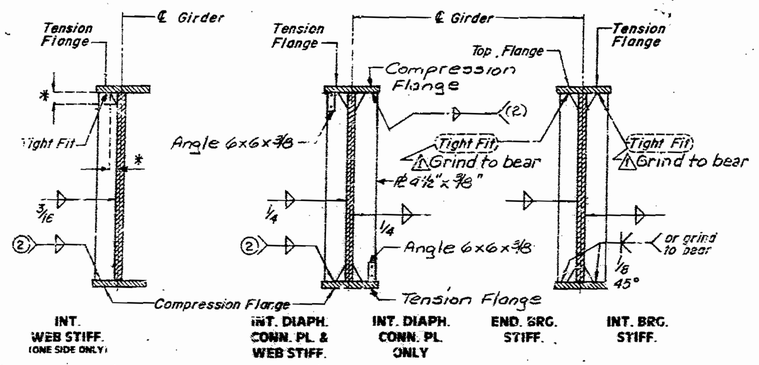

(2) Weld to compression flange as located on ELEVATION OF GIRDER.
* 1½"x 3" typical for all int. Web Stiff., int. Diaph. Conn. PL. and Brg. Stiff.,

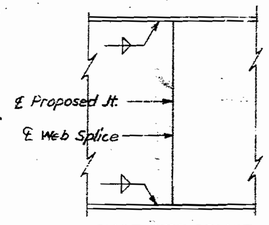

SHOP WEB SPLICE

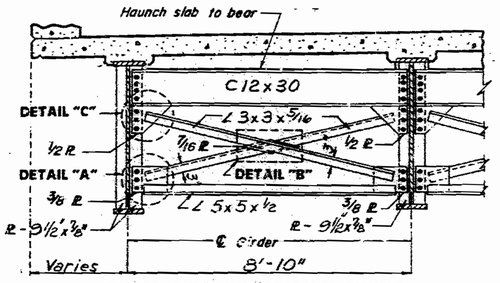

TYPICAL PART SECTION SHOWING END DIAPHRAGMS
(At Int. Bent No.17)

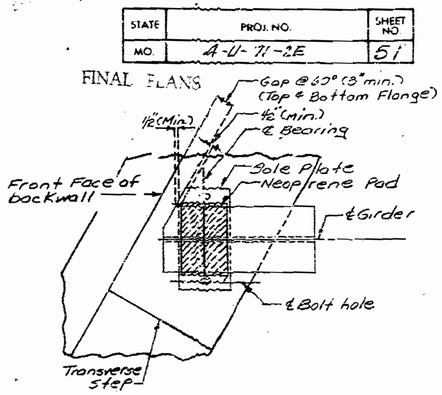

CLIPPING DETAILS
BENT NO. 21

WELDING DETAILS

Note: The two ⅞"ø H.S. Bolts that connect the 6x6x⅜ angle to the top flange shall be placed so the nut is on the inside of flange toward the web.

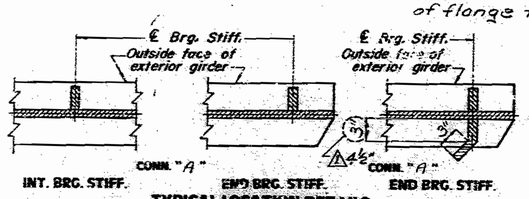

TYPICAL LOCATION DETAILS

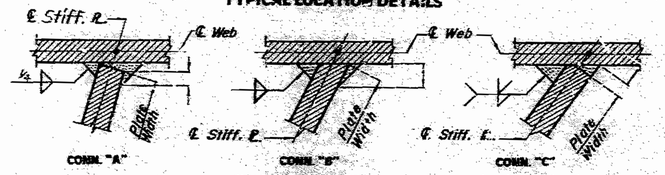

WELDING DETAILS

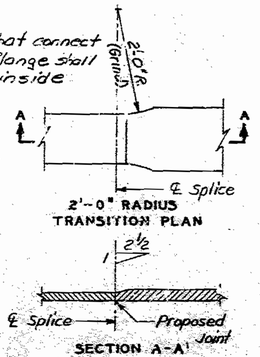

SECTION A-A'

WELDED SHOP FLANGE SPLICE

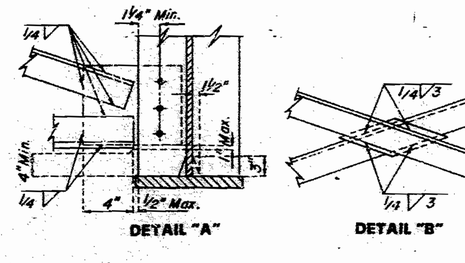

DETAIL "A" DETAIL "B" DETAIL "C"

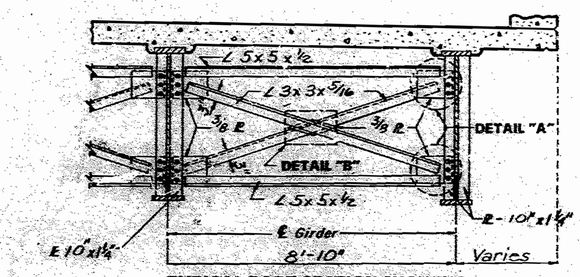

TYPICAL PART SECTION SHOWING CROSS FRAMES

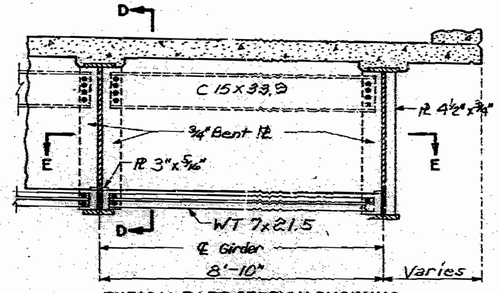

TYPICAL PART SECTION SHOWING END DIAPHRAGMS
(At End Bent No 21)

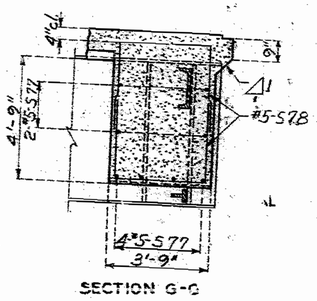

SECTION G-G

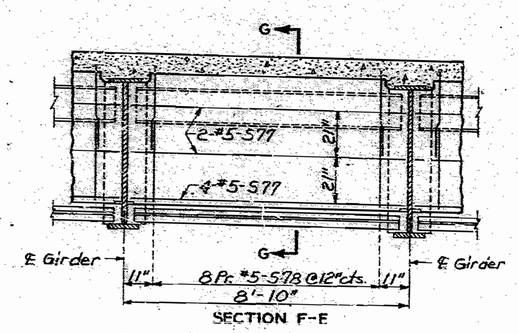

SECTION F-E

Note: For location of Section F-F see Sheet No 54.

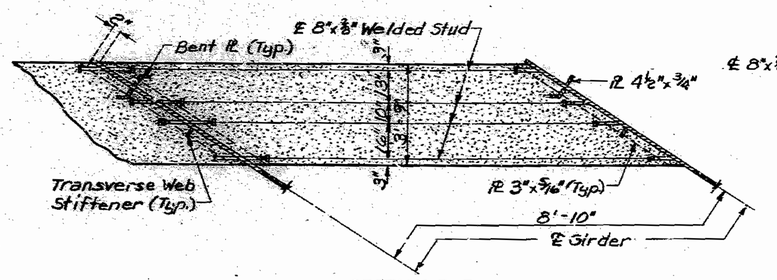

SECTION E-E

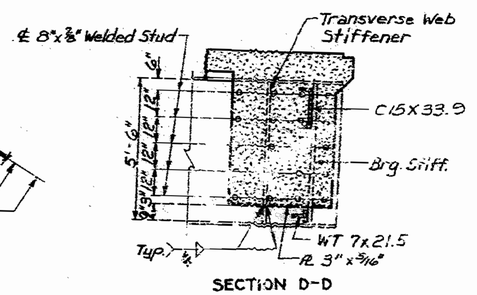

SECTION D-D

DETAILED FEB. 1989
CHECKED July 1989

Note: This drawing is not to scale. Follow dimensions.

Sheet No. 46 of 75 ⚠ Revised 3-22-90

JACKSON COUNTY

A-2733

STATE	PROJ. NO.	SHEET NO.
MO.	4-U-71-25	9

FINAL PLANS

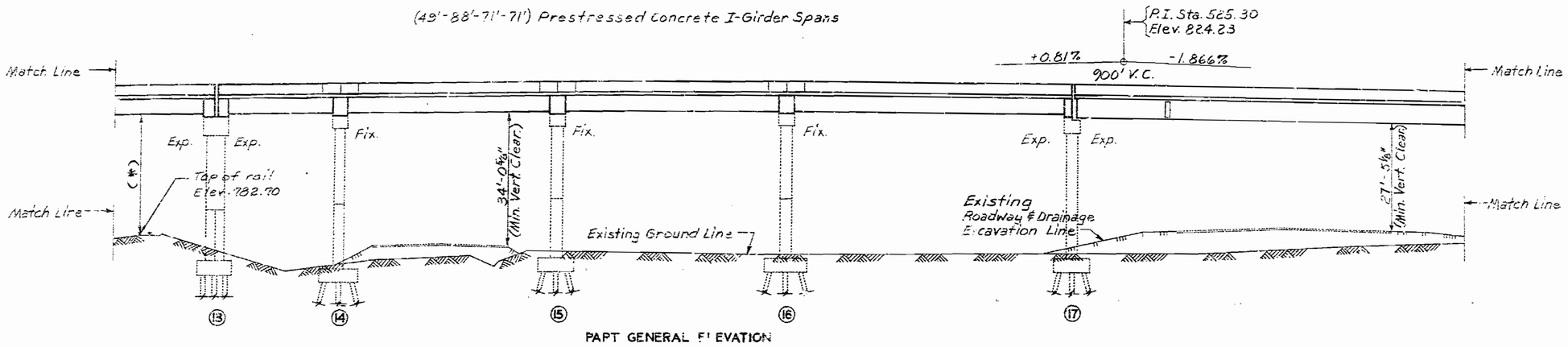

PART GENERAL ELEVATION

* Note: "(*)" Final vertical clearance from top of rails to bottom of superstructure to be at least 23'-0".

N.B. DETOUR CURVE DATA

P.I. Sta.	= 21+83.94
Δ	= 25°-23'-41"
D	= 6°-00'-00"
R	= 954.93'
L	= 423.25'
T	= 215.16'
E	= 23.94'

BLUE RIVER RD. CURVE DATA

P.I. Sta.	= 14+16.04
Δ	= 23°-30'-42"
D	= 7°-00'-00"
R	= 818.51'
L	= 335.88'
T	= 170.34'
E	= 17.54'

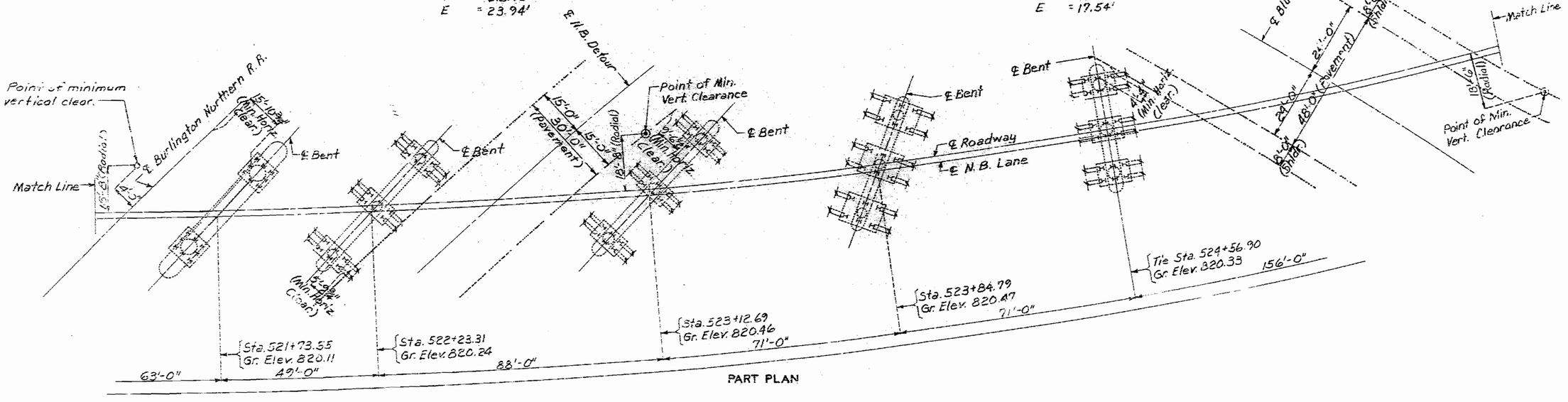

PART PLAN

DETAILED JULY 1988
CHECKED July 1988

Note: This drawing is not to scale. Follow dimensions.

Sheet No. 4 of 75

JACKSON COUNTY

A-2733

STATE	PROJ. NO.	SHEET NO.
MO	A-U-71-2E	10

FINAL PLANS

(156'-135'-125'-72') Continuous Composite Plate Girder Spans

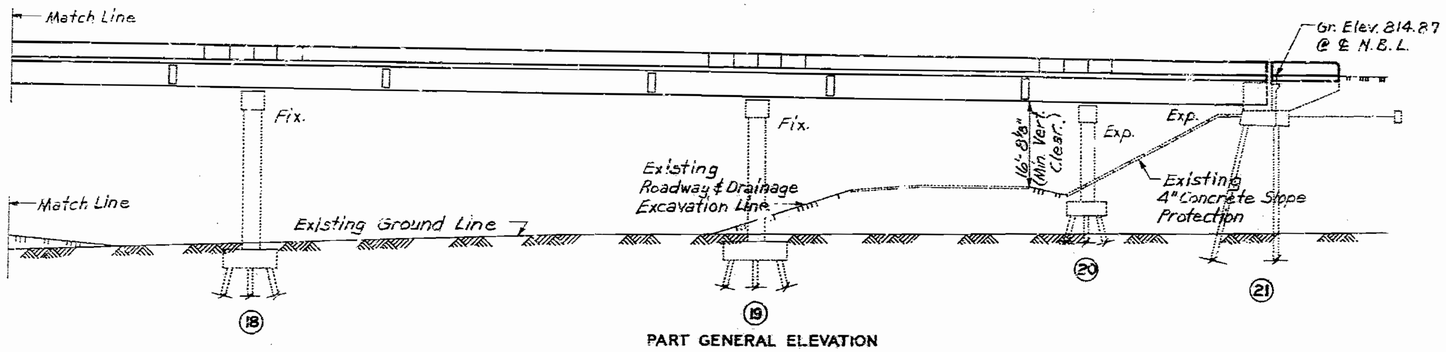

PART GENERAL ELEVATION

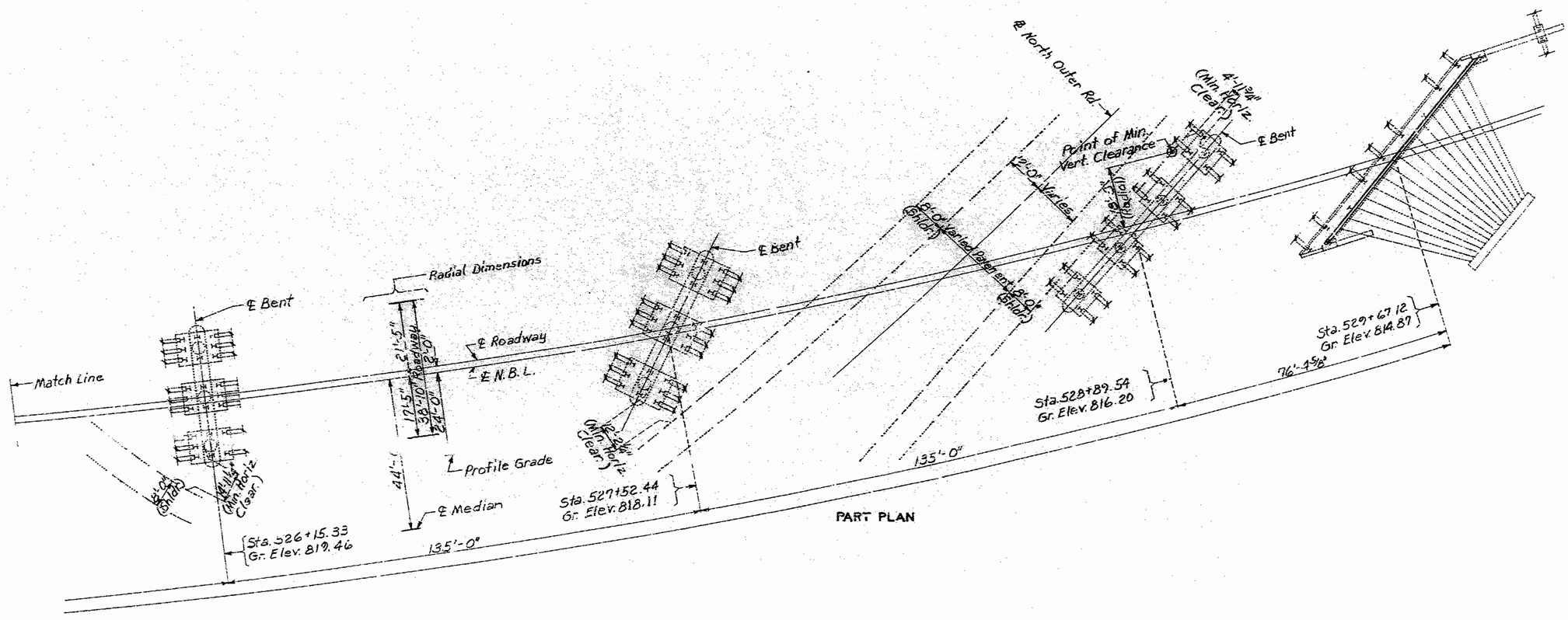

PART PLAN

DETAILED JULY 1989
CHECKED July 1989

Note. This drawing is not to scale. Follow dimensions.

Sheet No. 54 of 75

JACKSON COUNTY

A-2733

STATE	PROJ. NO.	SHEET NO.
MO	4-U-71-2E	11

FINAL PLANS

GENERAL NOTES:

Design Specifications : A.A.S.H.T.O. - 1983 and Interims thru 1988
Load Factor Design

Design Loading :
HS20-44 Modified 24,000# Tandem Axle
35#/sq. ft. Future Wearing Surface
Earth 120#/cu. ft., Equivalent Fluid Pressure 49#/cu.ft (Bt. #1) 29#/cu.ft. (Bt. #21)
Fatigue Stress (R. Girders) - Case II
Superstructure (Prestressed Girders) : Simply-supported, non-composite for Dead Load. Continuous composite for Live Load.

Design Unit Stresses :
Class B1 Concrete (Safety Barrier Curb) f'c = 4,000 psi.
Class B2 Concrete (Superstructure, except Prestressed Girders and Safety Barrier Curb) f'c = 4,000 psi.
Reinforcing Steel (Grade 60) fy = 60,000 psi.
Structural Carbon Steel fy = 36,000 psi.
Structural Steel (A.S.T.M. A572 Grade 50 fy = 50,000 psi.
For Prestressed Girder Stresses see Sheets 22 thru 36.

Bearings :
Bearings shall be 60 durometer Neoprene Pads for Bents No. 1 thru No. 17 (Prestressed Girders) and 70 durometer Neoprene Pads for Bents No. 17 thru No. 21 (R. Girders).

Fabricated Steel :
Field connections, High Strength Bolts 3/4"ϕ, holes 13/16"ϕ, except as noted.

Joint Filler :
All joint filler shall meet the requirements of Std. Spec. 1057.2.4, except as noted.

Reinforcing Steel :
Minimum clearance to reinforcing steel shall be 1½", unless otherwise noted.

Painting :
System C by Contractor in accordance with Std. Spec. 712.12. Color of the final field coat shall be green.

Construction Clearance :
A minimum vertical clearance of 14'-6" from existing lanes and a minimum lateral clearance of *** centered on existing lanes shall be maintained during construction.

*** { 52'-0" (Manchester Trafficway)
34'-0" (N.B. Rte. 71 Detour)
52'-0" (Blue River Road)
Variable Pav't. width +2'-0" from Pav't edges (North Outer Rd)

A minimum vertical clearance of 2'-6" from top of rails and a minimum lateral clearance of 12'-0" from the centerline of track to nearest temporary construction falsework shall be maintained during construction.

Outline of old work is indicated by light dashed lines. Heavy lines indicate new work.

ESTIMATED QUANTITIES

ITEM		TOTAL
Slab on Concrete I-Girder, See Spec. Prov.	Sq. Yd.	5463
Slab on Steel, See Spec. Prov.	Sq. Yd.	2305
Safety Barrier Curb	Lin. Ft.	168
Plain Neoprene Bearing Pads	Each	5
Laminated Neoprene Bearing Pads	Each	155
Type N PTFE Bearings	Each	15
Elastomeric Expansion Joint Seal (3 inch)	Lin. Ft.	54
Elastomeric Expansion Joint Seal (4 inch)	Lin. Ft.	189
Prestressed Concrete I-Girders (49' Span)	Each	5
Prestressed Concrete I-Girders (61' Span)	Each	5
Prestressed Concrete I-Girders (43' Span)	Each	15
Prestressed Concrete I-Girders (71' Span)	Each	10
Prestressed Concrete I-Girders (82' Span)	Each	40
Prestressed Concrete I-Girders (88' Span)	Each	5
Fabricated Structural Carbon Steel (R. Gdrs.)	Lb.	443,800
Fabricated Structural Low Alloy Steel (R. Gdrs.) A-572	Lb.	347,210
Slab Drains	Each	116
Vertical Drains at End Bents	Each	2
Painting (System C) Green	Ton	393.5
Laminated Neoprene Bearing Pads (Steel Structures)	Each	10
CONTINGENT ITEM		
Slip Form Barrier Curb	Lin. Ft.	3291

Note : The Cost of furnishing, fabricating and installing Neoprene Bearing Pads, complete-in-place, will be paid for at the Contract Unit Price for Plain and Laminated Neoprene Bearing Pads per each.
All concrete and reinforcement in End Bent No. 1 is included in the estimated superstructure quantities for "Slab on Concrete I-Gdr.", see Special Provisions.

ESTIMATED QUANTITIES FOR ALTERNATE SLABS

TYPE OF SLAB	SLAB ON STEEL		SLAB ON CONC. I-GDR.		
	REINF. (LBS.) EPOXY	CONC. (CU. YD.)	REINF. (LBS.) EPOXY	REINF. (LBS.) PLAIN	CONC. (CU. YD.)
Cast-In-Place Conventional Forms	154,790	630.1	337,700	11,320	1630.4
Precast Panel Forms	——	——	255,190	11,320	1400.6**
Stay-In-Place Forms	154,790	615.2*	——	——	——

Note : The Table of Estimated Quantities for Alternate Slabs represents the quantities used by the State in preparing the cost estimate for concrete slabs. Variations may be encountered in these estimated quantities but these variations cannot be used for an adjustment in the Contract Unit Price per square yard of Alternate Slab used.
See Special Provisions for alternate methods of forming slabs.
* Does not include concrete required to fill corrugations of S.I.P. Forms.
** Based on minimum top flange thickness and minimum joint filler thickness.
Precast panel quantities are based on skewed end panels.
The prestressed panel quantities are not included in the table of Estimated Quantities for Alternate Slabs.
Concrete and reinforcement in Estimated Quantities for "Slab on Steel" includes concrete and reinforcing in backwall, above upper const. joint, at End Bent No. 21.

STATE	PROJ. NO.	SHEET NO.
MO.	A-U-71-2E	20

FINAL PLANS

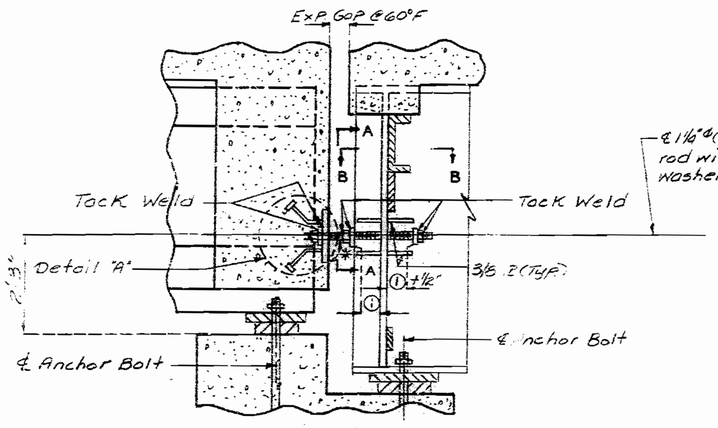

℄ 1⅛"Φ (A-307) threaded rod with 3 nuts & beveled washers (Galv.)

PART SECTION NEAR ℄ GIRDER NO. 1

*90°-00'-00"

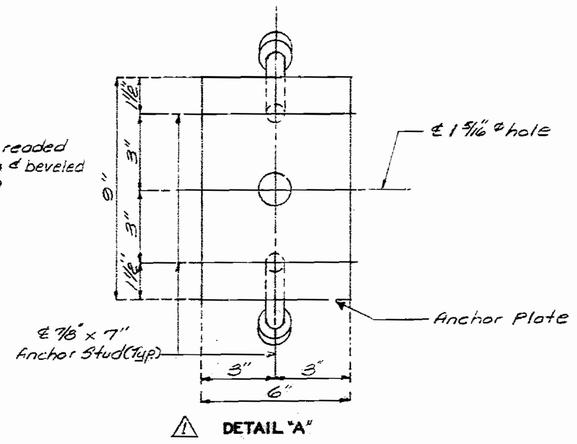

⚠ DETAIL "A"

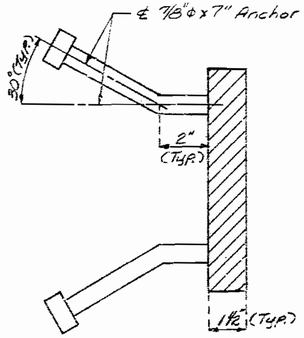

SECTION THRU ANCHOR PLATE

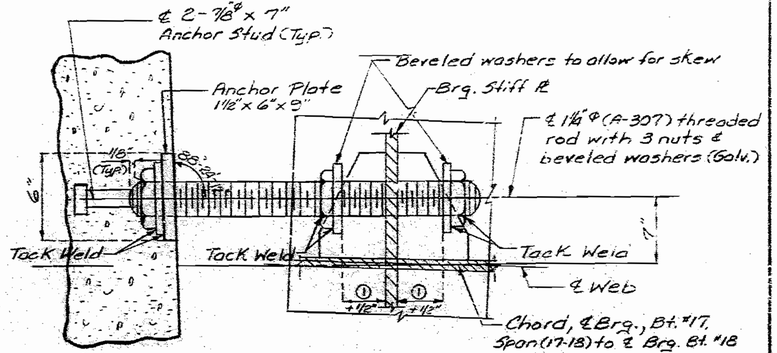

PART SECTION SHOWING RESTRAINER PLACEMENT AT GIRDERS NO. 2 THRU NO. 5

Note: Restrainer to be placed on opposite side of Girder No. 1

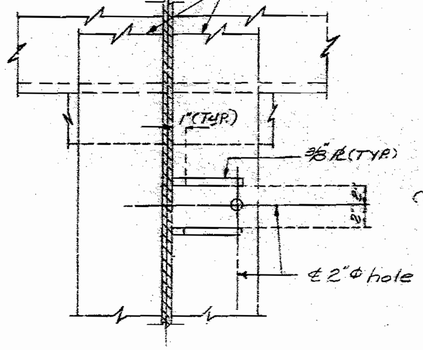

SECTION A-A

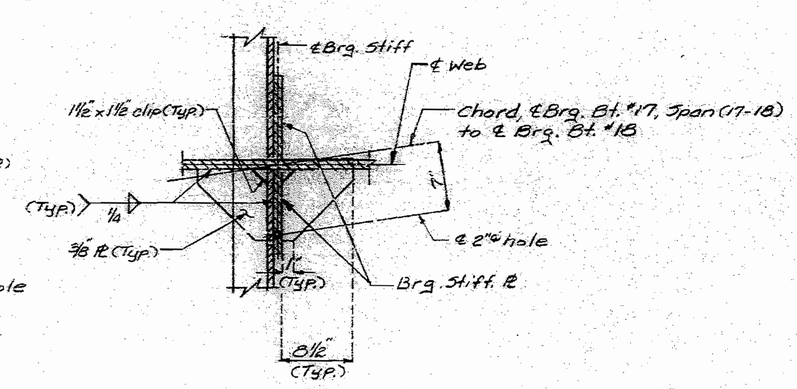

SECTION B-B

Note: 2"Φ hole in bearing stiffener ℞ shall be drilled to align with 1¼"Φ threaded rods in order to maintain ¼" clearance between 1¼"Φ threaded rod and edge of 2"Φ hole on all sides.

① Exp. Gap @ 60°F

Note: A temporary threaded plug shall be inserted into each embedded hex nut in the diaphragm before concrete is poured. Plugs shall extend ⅛" into diaphragm concrete as shown in Part Section.

For location of expansion chords A-A, B-B, C-C, D-D & E-E, see bearing alignment sheet No. 16.

Weight of 3/8" plates, threaded rods, nuts, washers and anchor plates are included in weight of fabricated structural carbon steel.

3/8" plates and anchor plates shall be A-36 Steel.

Studs shall be in accordance with Section 1087.

DETAILS OF EARTHQUAKE RESTRAINERS AT INT. BT NO. 17

DETAILED MAY 1989
CHECKED July 1989

Note: This drawing is not to scale. Follow dimensions.

 ⚠ Revised Dec. 6, 1989 JACKSON COUNTY A-2733

STATE	PROJ. NO.	SHEET NO.
MO.	4-U-71-2E	21

FINAL PLANS

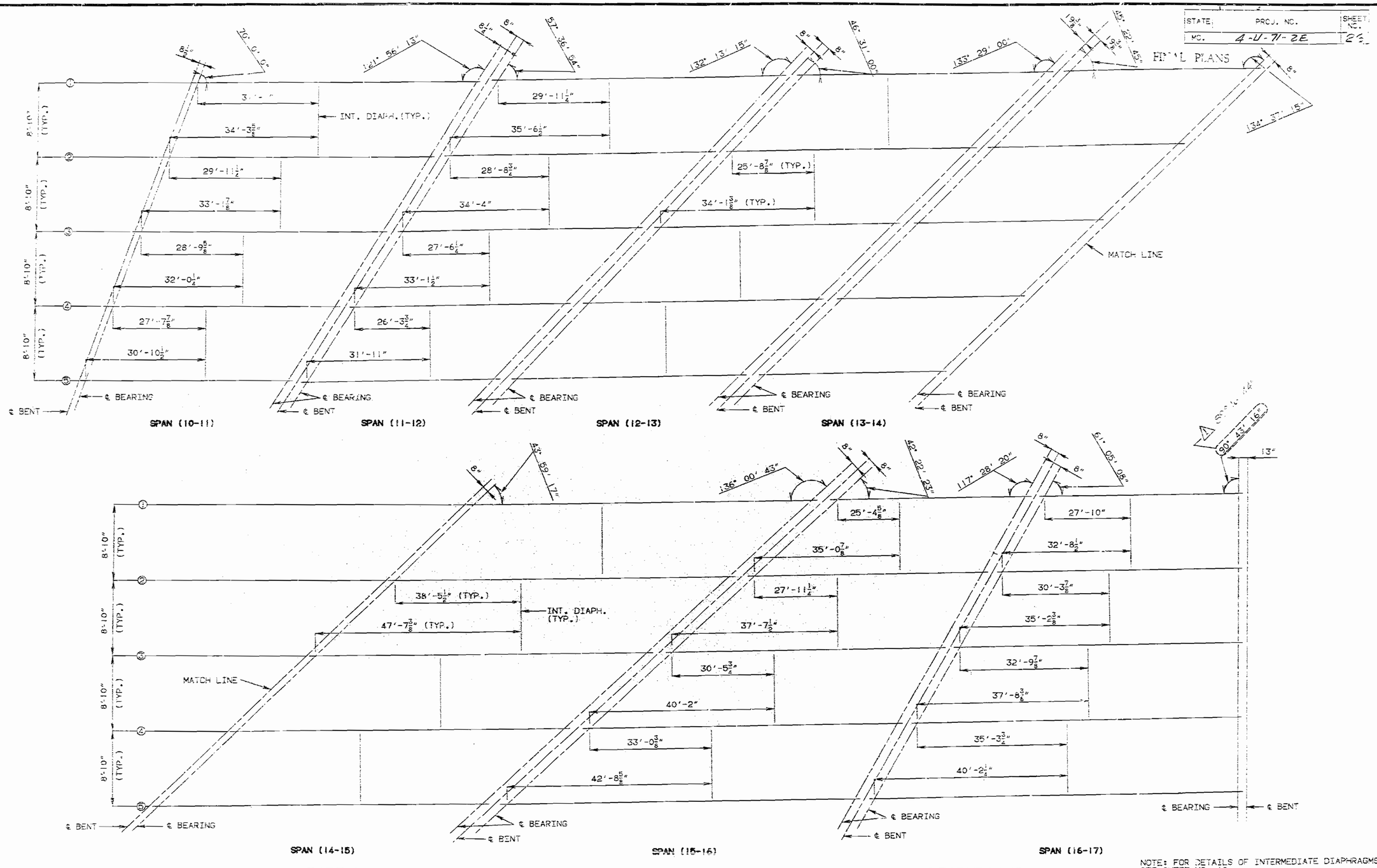

PART PLAN SHOWING PRESTRESSED GIRDER LAYOUT AND LOCATION OF INT. DIAPHRAGMS

NOTE: FOR DETAILS OF INTERMEDIATE DIAPHRAGMS SEE SHEET NO. 19.
DIMENSIONS SHOWN ARE HORIZONTAL.

DETAILED JULY 1989
CHECKED JULY 1989

NOTE: THIS DRAWING IS NOT TO SCALE. FOLLOW DIMENSIONS.

SHEET NO. 21A OF 75. ⚠ Revised Dec. 6, 1989

JACKSON COUNTY

A-2733

STATE	PRO. NO	SHEET NO.
MO	4-41-71-2E ℄	45

FINAL PLANS

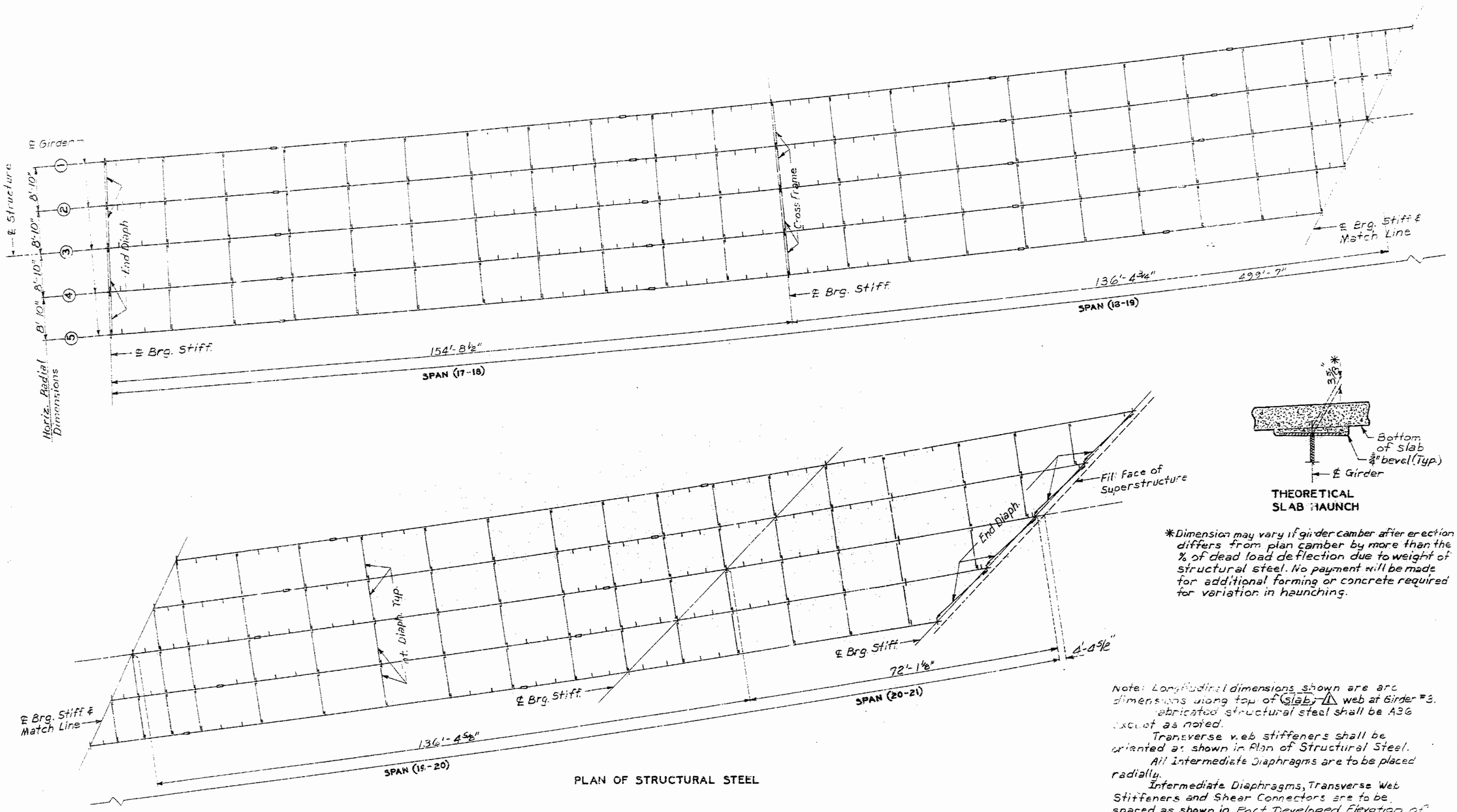

PLAN OF STRUCTURAL STEEL

THEORETICAL SLAB HAUNCH

*Dimension may vary if girder camber after erection differs from plan camber by more than the % of dead load deflection due to weight of structural steel. No payment will be made for additional forming or concrete required for variation in haunching.

Note: Longitudinal dimensions shown are arc dimensions along top of Slab ⚠ web at Girder #3.

Fabricated structural steel shall be A36 except as noted.

Transverse web stiffeners shall be oriented as shown in Plan of Structural Steel.

All intermediate diaphragms are to be placed radially.

Intermediate Diaphragms, Transverse Web Stiffeners and Shear Connectors are to be spaced as shown in Part Developed Elevation of Girders. See sheets No. 41 and 42.

DETAILED JUNE 1988
CHECKED July 1989

Note: This drawing is not to scale. Follow dimensions.

Sheet No. 20 of 75 ⚠ Revised Dec. 6, 1989

JACKSON COUNTY

A-2733