MISSOURI HIGHWAYS AND TRANSPORTATION COMMISSION
PLANS FOR PROPOSED
STATE HIGHWAY

JACKSON COUNTY

DESIGN DESIGNATION

A.A.D.T. - 2013 = VARIES
A.A.D.T. - 2043 = VARIES
D.H.V. = VARIES
T = VARIES
V = VARIES
D = VARIES
FUNCTIONAL CLASSIFICATION- VARIES

NO RIGHT-OF-WAY ACQUISITION

CONVENTIONAL SYMBOLS
(USED IN PLANS)

	EXISTING	NEW
BUILDINGS AND STRUCTURES		
GUARD RAIL		
CONCRETE RIGHT-OF-WAY MARKER		
STEEL RIGHT-OF-WAY MARKER		
LOCATION SURVEY MARKER		
UTILITIES		
FIBER OPTICS	—FO—	—FO—
OVERHEAD TELEPHONE	—O—	—O—
UNDERGROUND TELEPHONE	—T—	—T—
OVERHEAD POWER	—□—	—□—
UNDERGROUND POWER	—P—	—P—
GAS	—G—	—G—
WATER	—W—	—W—
MANHOLE	SAN	
FIRE HYDRANT	HYD	
WATER VALVE	WV	
WATER METER	WM	
DROP INLET	D	
DITCH BLOCK		
GROUND MOUNTED SIGN	SIGN	
LIGHT POLE		
H-FRAME POWER POLE		
TELEPHONE PEDESTAL	PED	
FENCE		
CHAIN LINK	—V—	
WOVEN WIRE	—X—	
GATE POST		
BENCHMARK	BM	

NOTE: DASHED OR OPEN SYMBOLS INDICATE EXISTING FEATURES

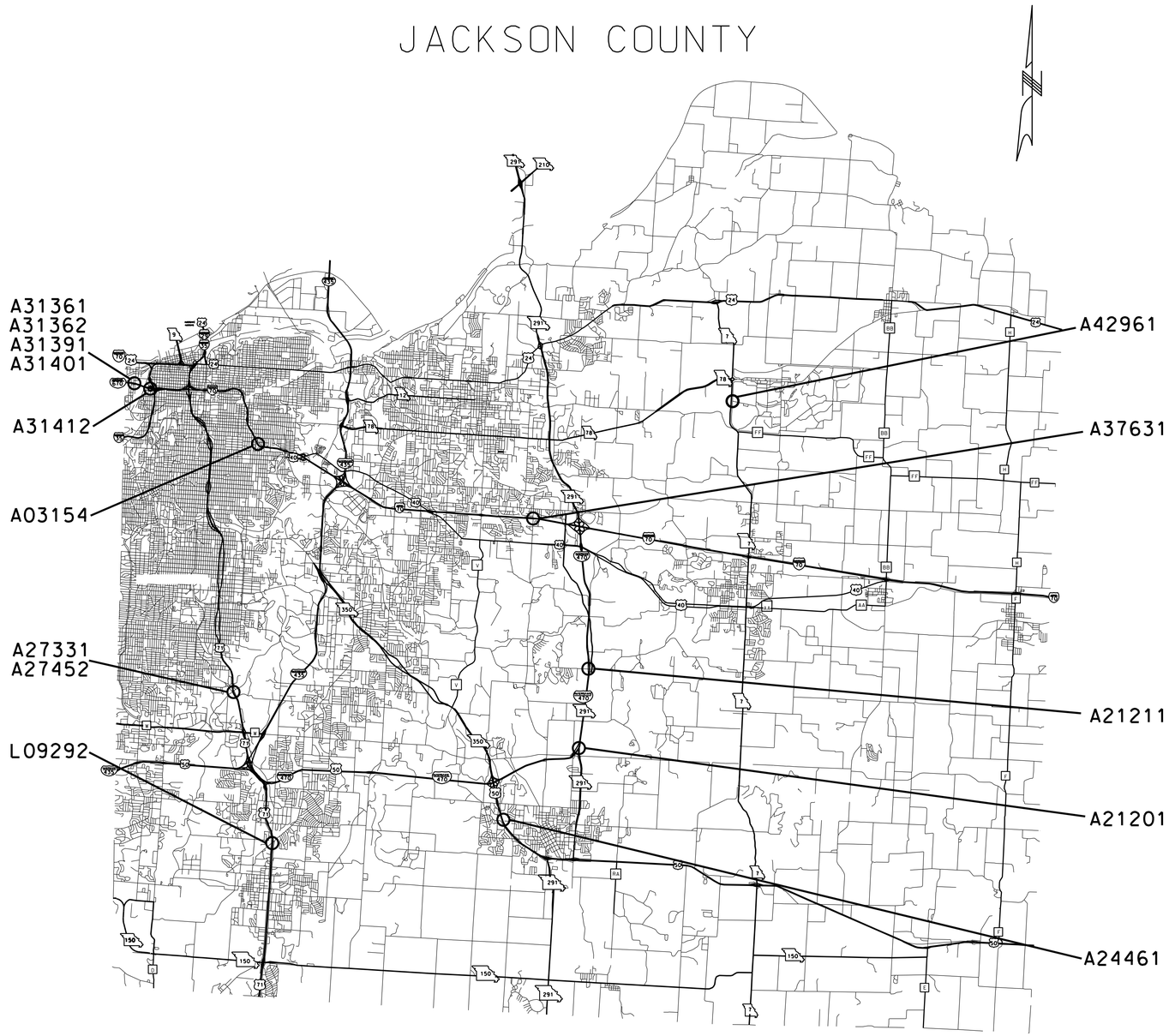

PROJECT LIMITS: VARIOUS BRIDGES

JOINT REPLACEMENTS, SAFETY IMPROVEMENTS
DRAINAGE IMPROVEMENTS

INDEX OF SHEETS

DESCRIPTION	SHEET NUMBER
TITLE SHEET	1
TYPICAL SECTIONS (TS) (0 SHEETS)	2
QUANTITIES (QU) (19 SHEETS)	3
PLAN-PROFILE (PP)	4-9
RIGHT OF WAY (RW)	
REFERENCE POINTS (RP)	
COORDINATE POINTS (CP)	
SPECIAL SHEETS (SS)	
TRAFFIC CONTROL SHEETS (TC)	10-61
EROSION CONTROL SHEETS (EC)	
LIGHTING (LT)	
SIGNALS (SG)	
SIGNING (SN)	
PAVEMENT MARKING (PM)	62-81
CULVERT SECTIONS (CS)	
BRIDGE DRAWINGS (B)	
A03154	1-11
A21201	1-7
A21211	1-12
A24461	1-6
A27331	1-11
A27452	1-12
A31361	1-14
A31362	1-16
A31391	1-5
A31401	1-9
A31412	1-14
A37631	1-6
A42961	1-5
L09292	1-21

THIS PROJECT WILL BE LET IN COMBINATION WITH J4S3055 AND J4P2191B

LENGTH OF PROJECT

BEGINNING OF PROJECT	VARIES
END OF PROJECT	VARIES
BRIDGE A03154	183 FT
BRIDGE A21201	273 FT
BRIDGE A21211	252 FT
BRIDGE A24461	289 FT
BRIDGE A27331	1688 FT
BRIDGE A27452	1589 FT
BRIDGE A31361	3195 FT
BRIDGE A31362	3195 FT
BRIDGE A31391	1089 FT
BRIDGE A31401	791 FT
BRIDGE A31412	400 FT
BRIDGE A37631	246 FT
BRIDGE A42961	160 FT
BRIDGE L09292	243 FT
APPARENT LENGTH	13593 FT
EQUATIONS AND EXCEPTIONS:	
TOTAL CORRECTIONS	0 FT
NET LENGTH OF PROJECT	13593 FT
STATE LENGTH	2.574 MILES

"THIS MEDIA SHOULD NOT BE CONSIDERED A CERTIFIED DOCUMENT."

DATE PREPARED	1/15/2014
ROUTE	VAR.
STATE	MO
DISTRICT	KC
SHEET NO.	1
COUNTY	JACKSON
JOB NO.	J4P2191
CONTRACT ID.	
PROJECT NO.	
BRIDGE NO.	VARIES

DATE	DESCRIPTION

MISSOURI HIGHWAYS AND TRANSPORTATION COMMISSION
105 WEST CAPITOL
JEFFERSON CITY, MO 65102
1-888-ASK-MODOT (1-888-275-6636)

IF A SEAL IS PRESENT ON THIS SHEET IT HAS BEEN ELECTRONICALLY SEALED AND DATED.

REV.

REFER TO BRIDGE PLANS FOR TYPICAL LAYOUTS

TYPICAL SHEET
SHEET 1 OF 1

"THIS MEDIA SHOULD NOT BE CONSIDERED A CERTIFIED DOCUMENT."

DATE PREPARED	12/15/2013
ROUTE	VAR.
STATE	MO
DISTRICT	KC
SHEET NO.	2
COUNTY	JACKSON
JOB NO.	J4P2191
CONTRACT ID.	
PROJECT NO.	
BRIDGE NO.	VARIES

DESCRIPTION	DATE

MISSOURI HIGHWAYS AND TRANSPORTATION COMMISSION
105 WEST CAPITOL
JEFFERSON CITY, MO 65102
1-888-ASK-MODOT (1-888-275-6636)

IF A SEAL IS PRESENT ON THIS SHEET IT HAS BEEN ELECTRONICALLY SEALED AND DATED.

REV.

MISSOURI HIGHWAYS AND TRANSPORTATION COMMISSION

SUMMARY OF QUANTITIES

NOTE: FOR REFERENCE ONLY. USE GRAND TOTAL FOR PAY QUANTITY ON SHEET 5 OF 19

NOTE: I.W. QUANTITIES ARE NOT DIVIDED BY 4 IN THE TOTALS.
I.W. QUANTITIES ARE DIVIDED BY 4 IN THE "USE" TOTALS.

TEMPORARY PAVEMENT MARKING

SHEET NO	ROUTE	LOCATION	6" S.W. (LF)	6" I.W. (LF)	6" S.Y. (LF)	6" S.W. REMOVAL (LF)	6" I.W. REMOVAL (LF)	6" S.Y. REMOVAL (LF)	REMARKS
30-35	US 71 S	SB LANE TRANSITION	200		200	200		200	STAGE 1 CONSTRUCTION
30-35	US 71 S	SB TEMP TRAFFIC LANE	1577		1577	1577		1577	STAGE 1 CONSTRUCTION
30-35	US 71 N	NB LANE TRANSITION	200		200	200		200	STAGE 1 CONSTRUCTION
30-35	US 71 N	NB TEMP TRAFFIC LANE	1702		1702	1702		1702	STAGE 1 CONSTRUCTION
36-38	US 71 S	SB LANE TRANSITION	200		200	200		200	STAGE 2 CONSTRUCTION
36-38	US 71 S	SB TEMP TRAFFIC LANE	1577		1577	1577		1577	STAGE 2 CONSTRUCTION
36-38	US 71 N	NB LANE TRANSITION	200		200	200		200	STAGE 2 CONSTRUCTION
36-38	US 71 N	NB TEMP TRAFFIC LANE	1702		1702	1702		1702	STAGE 2 CONSTRUCTION
		SUBTOTALS	7358		7358	7358		7358	
		USE	7358		7358	14716			

PERMANENT PAVEMENT MARKING

SHEET NO	ROUTE	LOCATION	6" S.W. (LF)	6" I.W. (LF)	6" S.Y. (LF)	6" S.W. REMOVAL (LF)	6" I.W. REMOVAL (LF)	6" S.Y. REMOVAL (LF)	REMARKS
30-35	US 71 S	SB CHANNELIZER TAPER					993		STAGE 1 CONSTRUCTION
30-35	US 71 S	TEMP PM BEGIN TO BRIDGE						200	STAGE 1 CONSTRUCTION
30-35	US 71 S	BRIDGE A27452				1577	1577	1577	STAGE 1 CONSTRUCTION
30-35	US 71 N	NB CHANNELIZER TAPER					1180		STAGE 1 CONSTRUCTION
30-35	US 71 N	TEMP PM BEGIN TO BRIDGE						200	STAGE 1 CONSTRUCTION
30-35	US 71 N	BRIDGE A27331				1702	1702	1702	STAGE 1 CONSTRUCTION
36-38	US 71 S	SB CHANNELIZER TAPER				200			STAGE 2 CONSTRUCTION
36-38	US 71 N	NB CHANNELIZER TAPER				200			STAGE 2 CONSTRUCTION
69-71	US 71 S	SB TAPER	200	993	200				RETURN TO ORIGINAL
69-71	US 71 S	BRIDGE A27452	1577	1577	1577				RETURN TO ORIGINAL
69-71	US 71 N	NB TAPER	200	1180	200				RETURN TO ORIGINAL
69-71	US 71 N	BRIDGE A27331	1702	1702	1702				RETURN TO ORIGINAL
		SUBTOTALS	3679	1363	3679	3679	1363	3679	
		USE	3679	1363	3679	8721			

A27331/A27452

TEMPORARY PAVEMENT MARKING

SHEET NO.	ROUTE	LOCATION	4" S.W. (LF)	4" S.Y. (LF)	4" S.W. REMOVAL (LF)	4" S.Y. REMOVAL (LF)	DESCRIPTION
40-41	7	BRIDGE A42961	379	2000	379		PHASE 1
42-43	7	BRIDGE A42961	379		379	2000	PHASE 2
		SUBTOTALS:	758	2000	758	2000	
		USE:	758	2000	2758		

PERMANENT PAVEMENT MARKING

SHEET NO.	ROUTE	LOCATION	6" S.Y. (LF)	6" I.Y. (LF)	6" S.Y. REMOVAL (LF)	6" I.Y. REMOVAL (LF)	DESCRIPTION
72-73	7	BRIDGE A42961	1000	1000	1000	1000	PERMANENT
		SUBTOTALS:	1000	1000	1000	1000	
		USE:	1250		1250		

A42961

TEMPORARY PAVEMENT MARKING

SHEET NO.	ROUTE	LOCATION	4" S.W. (LF)	4" S.Y. (LF)	4" S.W. REMOVAL (LF)	4" S.Y. REMOVAL (LF)	DESCRIPTION
19-20	291	291 OVER I-470		2045		2045	PHASE 1
21-22	291	291 OVER I-470	1174		1174		PHASE 2
		SUBTOTALS:	1174	2045	1174	2045	
		USE:	1174	2045	3219		

PERMANENT PAVEMENT MARKING

SHEET NO.	ROUTE	LOCATION	6" I.W. (LF)	6" I.W. REMOVAL (LF)	DESCRIPTION
19-20	291	291 OVER I-470.		1382	PHASE 1, 2
66-67	291	291 OVER I-470.	1382		PHASE 3
		SUBTOTALS:	1382	1382	
		USE:	346	346	

A21201

TEMPORARY PAVEMENT MARKING

SHEET NO.	ROUTE	LOCATION	4" S.W. (LF)	4" S.Y. (LF)	4" S.W. REMOVAL (LF)	4" S.Y. REMOVAL (LF)	DESCRIPTION
15-16	I-70	I-70 OVER JACKSON AVE.	2860	1100	2860	1100	PHASE 1
17-18	I-70	I-70 OVER JACKSON AVE.	2200	1960	2200	1960	PHASE 3
		SUBTOTALS:	5060	3060	5060	3060	
		USE:	5060	3060	8120		

PERMANENT PAVEMENT MARKING

SHEET NO.	ROUTE	LOCATION	6" S.W. (LF)	6" I.W. (LF)	6" S.Y. (LF)	6" S.W. REMOVAL (LF)	6" I.W. REMOVAL (LF)	6" S.Y. REMOVAL (LF)	DESCRIPTION
15-16	I-70	I-70 OVER JACKSON AVE.					3060	1100	PHASE 1
62-63	I-70	I-70 OVER JACKSON AVE.		3060	1100				PHASE 2
17-18	I-70	I-70 OVER JACKSON AVE.				1100	1960		PHASE 3
64-65	I-70	I-70 OVER JACKSON AVE.	1100	1960					PHASE 4
		SUBTOTALS:	1100	5020	1100	1100	5020	1100	
		USE:	2355		1100	3455			

A03154

SUMMARY SHEET
SHEET 1 OF 19

"THIS MEDIA SHOULD NOT BE CONSIDERED A CERTIFIED DOCUMENT."

DATE PREPARED 1/8/2014
ROUTE VAR. STATE MO
DISTRICT KC SHEET NO. 3
COUNTY JACKSON
JOB NO. J4P2191
CONTRACT ID.
PROJECT NO.
BRIDGE NO. VARIES

DESCRIPTION
DATE

MISSOURI HIGHWAYS AND TRANSPORTATION COMMISSION
105 WEST CAPITOL
JEFFERSON CITY, MO 65102
1-888-ASK-MODOT (1-888-275-6636)

IF A SEAL IS PRESENT ON THIS SHEET IT HAS BEEN ELECTRONICALLY SEALED AND DATED.

REV.

MISSOURI HIGHWAYS AND TRANSPORTATION COMMISSION

SUMMARY OF QUANTITIES

TEMPORARY PAVEMENT MARKING

SHEET NO.	ROUTE	LOCATION	4" S.W. (LF)	4" S.Y. (LF)	TURN ARROW (LEFT) (EA)	24" STOP BAR (LF)	4" S.W. REMOVAL (LF)	4" S.Y. REMOVAL (LF)	TURN ARROW REMOVAL (EA)	24" STOP BAR REMOVAL (LF)	DESCRIPTION
23-24	EB WOODS CHAPEL	WEST END TO 1ST SIGNAL	276				276				PHASE 1
23-24	EB WOODS CHAPEL	1ST SIGNAL TO 2ND SIGNAL	1375	431	2	12	1375	431	2	12	PHASE 1
23-24	EB WOODS CHAPEL	2ND SIGNAL TO EAST END	140				140				PHASE 1
23-24	WB WOODS CHAPEL	EAST END TO 1ST SIGNAL		135							PHASE 1
23-24	WB WOODS CHAPEL	1ST SIGNAL TO 2ND SIGNAL		415	2			415	0		PHASE 1
23-24	WB WOODS CHAPEL	2ND SIGNAL TO WEST END									PHASE 1
23-24	RAMP 1	I-470 TO WOODS CHAPEL		695				0			PHASE 1
25-26	EB WOODS CHAPEL	WEST END TO 1ST SIGNAL		315							PHASE 2
25-26	EB WOODS CHAPEL	1ST SIGNAL TO 2ND SIGNAL	404	404	2		404	404			PHASE 2
25-26	EB WOODS CHAPEL	2ND SIGNAL TO EAST END	408	408			408	408			PHASE 2
25-26	WB WOODS CHAPEL	EAST END TO 1ST SIGNAL						135			PHASE 2
25-26	WB WOODS CHAPEL	1ST SIGNAL TO 2ND SIGNAL							2		PHASE 2
25-26	WB WOODS CHAPEL	2ND SIGNAL TO WEST END									PHASE 2
25-26	RAMP 1	I-470 TO WOODS CHAPEL									PHASE 2
27-28	EB WOODS CHAPEL	WEST END TO 1ST SIGNAL						315			PHASE 3
27-28	EB WOODS CHAPEL	1ST SIGNAL TO 2ND SIGNAL	404	404			404	404	2		PHASE 3
27-28	EB WOODS CHAPEL	2ND SIGNAL TO EAST END	240				240				PHASE 3
27-28	WB WOODS CHAPEL	EAST END TO 1ST SIGNAL				12				12	PHASE 3
27-28	WB WOODS CHAPEL	1ST SIGNAL TO 2ND SIGNAL	1588	474			1588	474			PHASE 3
27-28	WB WOODS CHAPEL	2ND SIGNAL TO WEST END									PHASE 3
27-28	RAMP 1	I-470 TO WOODS CHAPEL						695			PHASE 3
		SUBTOTALS:	4835	3681	6	24	4835	3681	6	24	
		USE:	4835	3681	6	24	8516		6	24	

PERMANENT PAVEMENT MARKING

SHEET NO.	ROUTE	LOCATION	6" S.W. (LF)	6" I.W. (LF)	6" S.Y. (LF)	TURN ARROW (LEFT) (EA)	24" STOP BAR (LF)	6" S.W. REMOVAL (LF)	6" I.W. REMOVAL (LF)	6" S.Y. REMOVAL (LF)	TURN ARROW (LEFT) REMOVAL (EA)	24" STOP BAR REMOVAL (LF)	DESCRIPTION
23-24	EB WOODS CHAPEL	WEST END TO 1ST SIGNAL							130				PHASE 1
23-24	EB WOODS CHAPEL	1ST SIGNAL TO 2ND SIGNAL	405			4		405		881	4	12	PHASE 1
23-24	EB WOODS CHAPEL	2ND SIGNAL TO EAST END									2		PHASE 1
23-24	WB WOODS CHAPEL	EAST END TO 1ST SIGNAL						54					PHASE 1
23-24	WB WOODS CHAPEL	1ST SIGNAL TO 2ND SIGNAL						425					PHASE 1
23-24	WB WOODS CHAPEL	2ND SIGNAL TO WEST END											PHASE 1
23-24	RAMP 1	I-470 TO WOODS CHAPEL						443					PHASE 1
25-26	EB WOODS CHAPEL	WEST END TO 1ST SIGNAL						193					PHASE 2
25-26	EB WOODS CHAPEL	1ST SIGNAL TO 2ND SIGNAL						404					PHASE 2
25-26	EB WOODS CHAPEL	2ND SIGNAL TO EAST END											PHASE 2
25-26	WB WOODS CHAPEL	EAST END TO 1ST SIGNAL	54										PHASE 2
25-26	WB WOODS CHAPEL	1ST SIGNAL TO 2ND SIGNAL						425					PHASE 2
25-26	WB WOODS CHAPEL	2ND SIGNAL TO WEST END											PHASE 2
25-26	RAMP 1	I-470 TO WOODS CHAPEL											PHASE 2
27-28.68	EB WOODS CHAPEL	WEST END TO 1ST SIGNAL	193	130									PHASE 3-4
27-28.68	EB WOODS CHAPEL	1ST SIGNAL TO 2ND SIGNAL	404		881								PHASE 3-4
27-28.68	EB WOODS CHAPEL	2ND SIGNAL TO EAST END											PHASE 3-4
27-28.68	WB WOODS CHAPEL	EAST END TO 1ST SIGNAL		161					161				PHASE 3-4
27-28.68	WB WOODS CHAPEL	1ST SIGNAL TO 2ND SIGNAL	850				24					12	PHASE 3-4
27-28.68	WB WOODS CHAPEL	2ND SIGNAL TO WEST END											PHASE 3-4
27-28.68	RAMP 1	I-470 TO WOODS CHAPEL	443										PHASE 3-4
		SUBTOTALS:	2349	291	881	4	24	2349	291	881	4	24	
		USE:	2422		881	4	24	3303			4	24	

A21211

NOTE: I.W. QUANTITIES ARE NOT DIVIDED BY 4 IN THE TOTALS.
I.W. QUANTITIES ARE DIVIDED BY 4 IN THE "USE" TOTALS.

NOTE: FOR REFERENCE ONLY. USE GRAND TOTAL FOR PAY QUANTITY ON SHEET 5 OF 19

SUMMARY SHEET
SHEET 2 OF 19

"THIS MEDIA SHOULD NOT BE CONSIDERED A CERTIFIED DOCUMENT."

DATE PREPARED 1/8/2014
ROUTE VAR. STATE MO
DISTRICT KC SHEET NO. 3
COUNTY JACKSON
JOB NO. J4P2191
CONTRACT ID.
PROJECT NO.
BRIDGE NO. VARIES

DESCRIPTION
DATE

MISSOURI HIGHWAYS AND TRANSPORTATION COMMISSION
105 WEST CAPITOL
JEFFERSON CITY, MO 65102
1-888-ASK-MODOT (1-888-275-6636)

IF A SEAL IS PRESENT ON THIS SHEET IT HAS BEEN ELECTRONICALLY SEALED AND DATED.

REV.

MISSOURI HIGHWAYS AND TRANSPORTATION COMMISSION

SUMMARY OF QUANTITIES

TEMPORARY PAVEMENT MARKING							
SHEET NO.	ROUTE	LOCATION	4" S.W. (LF)	4" S.Y. (LF)	4" S.W. REMOVAL (LF)	4" S.Y. REMOVAL (LF)	DESCRIPTION
48-51	I-670	A31361 WB BRIDGE	8785	4392	8785	4392	PHASE 1
48-51	I-670	A31362 EB BRIDGE	8771	4002	8771	4002	PHASE 1
48-51	RAMP	A31391 RAMP (WYOMING ST TO EB I-670)	0	0	0	0	PHASE 1
48-51	RAMP	A31401 RAMP (I-670 WB TO WYOMING ST)	0	0	0	0	PHASE 1
52-55	I-670	A31361 WB BRIDGE	10247	4636	10247	4636	PHASE 2
52-55	I-670	A31362 EB BRIDGE	10620	4994	10620	4994	PHASE 2
		SUBTOTALS:	38423	18024	38423	18024	
		USE:	38423	18024	56447		

PERMANENT PAVEMENT MARKING											
SHEET NO.	ROUTE	LOCATION	6" S.W. (LF)	6" I.W. (LF)	6" S.Y. (LF)	24" S.W. BAR (LF)	6" S.W. REMOVAL (LF)	6" I.W. REMOVAL (LF)	6" S.Y. REMOVAL (LF)	24" S.W. BAR REMOVAL (LF)	DESCRIPTION
77-80	I-670	A31361 WB BRIDGE	4720	10131	4430		4720	10131	4430		PERMANENT
77-80	I-670	A31362 EB BRIDGE	4862	9945	4450	38	4862	9945	4450	38	PERMANENT
77-80	RAMP	A31391 RAMP (WYOMING ST TO EB I-670)									PERMANENT
77-80	RAMP	A31401 RAMP (I-670 WB TO WYOMING ST)									PERMANENT
		SUBTOTALS:	9582	20076	8880	38	9582	20076	8880	38	
		USE:	14601		8880	38	23481			38	

A31361/A31362/A31391/A31401

TEMPORARY PAVEMENT MARKING									
SHEET NO.	ROUTE	LOCATION	4" S.W. (LF)	4" S.Y. (LF)	24" STOP BAR (LF)	4" S.W. REMOVAL (LF)	4" S.Y. REMOVAL (LF)	24" STOP BAR REMOVAL (LF)	DESCRIPTION
56	LEE'S SUMMIT RD	SB TRAFFIC	706	551	20	706	551	20	PHASE 1
56	LEE'S SUMMIT RD	NB TRAFFIC	660	610	20	660	610	20	PHASE 1
56	LEE'S SUMMIT RD	EB I-70 RAMP TO LEE'S SUMMIT RD.		715					PHASE 1
57-58	LEE'S SUMMIT RD	SB TRAFFIC	570	315	20	570	315	20	PHASE 2
57-58	LEE'S SUMMIT RD	NB TRAFFIC	947	284	20	947	284	20	PHASE 2
57-58	LEE'S SUMMIT RD	EB I-70 RAMP TO LEE'S SUMMIT RD.					715		PHASE 2
		SUBTOTALS:	2883	2475	80	2883	2475	80	
		USE:	2883	2475	80	5358		80	

PERMANENT PAVEMENT MARKING											
SHEET NO.	ROUTE	LOCATION	6" S.W. (LF)	6" I.W. (LF)	6" S.Y. (LF)	24" STOP BAR (LF)	6" S.W. REMOVAL (LF)	6" I.W. REMOVAL (LF)	6" S.Y. REMOVAL (LF)	24" STOP BAR REMOVAL (LF)	DESCRIPTION
81	LEE'S SUMMIT RD	SB TRAFFIC	1288	354		36	1288	354		36	PERMANENT
81	LEE'S SUMMIT RD	NB TRAFFIC	1496	210		36	1262	210		36	PERMANENT
81	LEE'S SUMMIT RD	EB I-70 RAMP TO LEE'S SUMMIT RD.	715				715				PERMANENT
		SUBTOTALS:	3265	564	0	72	3265	564	0	72	
		USE:	3640		0	72	3406			72	

A37631

NOTE: I.W. QUANTITIES ARE NOT DIVIDED BY 4 IN THE TOTALS.
I.W. QUANTITIES ARE DIVIDED BY 4 IN THE "USE" TOTALS.

NOTE: FOR REFERENCE ONLY. USE GRAND TOTAL FOR PAY QUANTITY ON SHEET 5 OF 19

SUMMARY SHEET
SHEET 3 OF 19

"THIS MEDIA SHOULD NOT BE CONSIDERED A CERTIFIED DOCUMENT."

DATE PREPARED 1/8/2014
ROUTE VAR. | STATE MO
DISTRICT KC | SHEET NO. 3
COUNTY JACKSON
JOB NO. J4P2191
CONTRACT ID.
PROJECT NO.
BRIDGE NO. VARIES

DESCRIPTION | DATE

MISSOURI HIGHWAYS AND TRANSPORTATION COMMISSION
105 WEST CAPITOL
JEFFERSON CITY, MO 65102
1-888-ASK-MODOT (1-888-275-6636)

IF A SEAL IS PRESENT ON THIS SHEET IT HAS BEEN ELECTRONICALLY SEALED AND DATED.

REV.

MISSOURI HIGHWAYS AND TRANSPORTATION COMMISSION

SUMMARY OF QUANTITIES

TEMPORARY PAVEMENT MARKING

SHEET NO.	ROUTE	LOCATION	4" S.W. (LF)	4" S.Y. (LF)	TURN ARROW (LEFT) (EA)	24" STOP BAR (LF)	4" S.W. REMOVAL (LF)	4" S.Y. REMOVAL (LF)	TURN ARROW REMOVAL (EA)	24" STOP BAR REMOVAL (LF)	DESCRIPTION
44	BLUE RIDGE BLVD	EB BLUE RIDGE FROM START (WEST END OF PROJECT) TO FIRST SIGNAL	701	399		24	701	399		24	PHASE 1
44	BLUE RIDGE BLVD	EB BLUE RIDGE FROM FIRST SIGNAL TO SECOND SIGNAL (BRIDGE)	1162	510	4	48	1162	510	2	48	PHASE 1
44	BLUE RIDGE BLVD	EB BLUE RIDGE FROM SECOND SIGNAL TO END (EAST END OF PROJECT)	591	488		24		257			PHASE 1
44	BLUE RIDGE BLVD	NB I-49 RAMP TO BLUE RIDGE BLVD		342	2						PHASE 1
44	BLUE RIDGE BLVD	SB I-49 RAMP TO BLUE RIDGE BLVD		486							PHASE 1
45	BLUE RIDGE BLVD	EB BLUE RIDGE FROM START (WEST END OF PROJECT) TO FIRST SIGNAL	431	502							PHASE 2
45	BLUE RIDGE BLVD	EB BLUE RIDGE FROM FIRST SIGNAL TO SECOND SIGNAL (BRIDGE)	1237	629	2	48	1237	629	2	48	PHASE 2
45	BLUE RIDGE BLVD	EB BLUE RIDGE FROM SECOND SIGNAL TO END (EAST END OF PROJECT)		256		24	591	487		24	PHASE 2
45	BLUE RIDGE BLVD	NB I-49 RAMP TO BLUE RIDGE BLVD									PHASE 2
45	BLUE RIDGE BLVD	SB I-49 RAMP TO BLUE RIDGE BLVD									PHASE 2
46	BLUE RIDGE BLVD	EB BLUE RIDGE FROM START (WEST END OF PROJECT) TO FIRST SIGNAL	272	272			272	272			PHASE 3
46	BLUE RIDGE BLVD	EB BLUE RIDGE FROM FIRST SIGNAL TO SECOND SIGNAL (BRIDGE)	1222	546	2	48	1222	546	4	48	PHASE 3
46	BLUE RIDGE BLVD	EB BLUE RIDGE FROM SECOND SIGNAL TO END (EAST END OF PROJECT)	576	525			576	525		24	PHASE 3
46	BLUE RIDGE BLVD	NB I-49 RAMP TO BLUE RIDGE BLVD						342	2		PHASE 3
46	BLUE RIDGE BLVD	SB I-49 RAMP TO BLUE RIDGE BLVD						486			PHASE 3
74	BLUE RIDGE BLVD	EB BLUE RIDGE FROM START (WEST END OF PROJECT) TO FIRST SIGNAL	283	284			714	786			PHASE 4
74	BLUE RIDGE BLVD	EB BLUE RIDGE FROM FIRST SIGNAL TO SECOND SIGNAL (BRIDGE)									PHASE 4
74	BLUE RIDGE BLVD	EB BLUE RIDGE FROM SECOND SIGNAL TO END (EAST END OF PROJECT)	570	516		24	570	516		24	PHASE 4
74	BLUE RIDGE BLVD	NB I-49 RAMP TO BLUE RIDGE BLVD									PHASE 4
74	BLUE RIDGE BLVD	SB I-49 RAMP TO BLUE RIDGE BLVD									PHASE 4
75	BLUE RIDGE BLVD	EB BLUE RIDGE FROM START (WEST END OF PROJECT) TO FIRST SIGNAL									PHASE 5
75	BLUE RIDGE BLVD	EB BLUE RIDGE FROM FIRST SIGNAL TO SECOND SIGNAL (BRIDGE)									PHASE 5
75	BLUE RIDGE BLVD	EB BLUE RIDGE FROM SECOND SIGNAL TO END (EAST END OF PROJECT)									PHASE 5
75	BLUE RIDGE BLVD	NB I-49 RAMP TO BLUE RIDGE BLVD									PHASE 5
75	BLUE RIDGE BLVD	SB I-49 RAMP TO BLUE RIDGE BLVD									PHASE 5
		SUBTOTALS:	7045	5755	10	240	7045	5755	10	240	
		USE:	7045	5755	10	240	12800		10	240	

PERMANENT PAVEMENT MARKING

SHEET NO.	ROUTE	LOCATION	6" S.W. (LF)	6" I.W. (LF)	6" D.E. (LF)	6" S.Y. (LF)	TRN ARW (LEFT) (EA)	TRN ARW (STRT) (EA)	TRN ARW (RIGHT) (EA)	TURN ARROW (STRT-LEFT) (EA)	24" STOP BAR (LF)	24" S.Y. BAR (LF)	6" S.W. REMOVAL (LF)	6" I.W. REMOVAL (LF)	6" S.Y. REMOVAL (LF)	TURN ARROW REMOVAL (EA)	24" STOP BAR REMOVAL (LF)	24" S.Y. BAR REMOVAL (LF)	DESCRIPT.
44	BLUE RIDGE	EB BLUE RIDGE FROM START (WEST END OF PROJECT) TO FIRST SIGNAL											183	419	782	2	12	48	PHASE 1
44	BLUE RIDGE	EB BLUE RIDGE FROM FIRST SIGNAL TO SECOND SIGNAL (BRIDGE)											824	83	522	4			PHASE 1
44	BLUE RIDGE	EB BLUE RIDGE FROM SECOND SIGNAL TO END (EAST END OF PROJECT)											213	40	721		36		PHASE 1
44	BLUE RIDGE	NB I-49 RAMP TO BLUE RIDGE BLVD											196			2			PHASE 1
44	BLUE RIDGE	SB I-49 RAMP TO BLUE RIDGE BLVD											274						PHASE 1
45	BLUE RIDGE	EB BLUE RIDGE FROM START (WEST END OF PROJECT) TO FIRST SIGNAL	110																PHASE 2
45	BLUE RIDGE	EB BLUE RIDGE FROM FIRST SIGNAL TO SECOND SIGNAL (BRIDGE)											976				48		PHASE 2
45	BLUE RIDGE	EB BLUE RIDGE FROM SECOND SIGNAL TO END (EAST END OF PROJECT)																	PHASE 2
45	BLUE RIDGE	NB I-49 RAMP TO BLUE RIDGE BLVD																	PHASE 2
45	BLUE RIDGE	SB I-49 RAMP TO BLUE RIDGE BLVD																	PHASE 2
46	BLUE RIDGE	EB BLUE RIDGE FROM START (WEST END OF PROJECT) TO FIRST SIGNAL												283	566				PHASE 3
46	BLUE RIDGE	EB BLUE RIDGE FROM FIRST SIGNAL TO SECOND SIGNAL (BRIDGE)															24		PHASE 3
46	BLUE RIDGE	EB BLUE RIDGE FROM SECOND SIGNAL TO END (EAST END OF PROJECT)											45		26				PHASE 3
46	BLUE RIDGE	NB I-49 RAMP TO BLUE RIDGE BLVD																	PHASE 3
46	BLUE RIDGE	SB I-49 RAMP TO BLUE RIDGE BLVD																	PHASE 3
74	BLUE RIDGE	EB BLUE RIDGE FROM START (WEST END OF PROJECT) TO FIRST SIGNAL																	PHASE 4
74	BLUE RIDGE	EB BLUE RIDGE FROM FIRST SIGNAL TO SECOND SIGNAL (BRIDGE)	824	83		522	4				72								PHASE 4
74	BLUE RIDGE	EB BLUE RIDGE FROM SECOND SIGNAL TO END (EAST END OF PROJECT)											473	273					PHASE 4
74	BLUE RIDGE	NB I-49 RAMP TO BLUE RIDGE BLVD	218				2	4	2		36		22		14	5	36		PHASE 4
74	BLUE RIDGE	SB I-49 RAMP TO BLUE RIDGE BLVD	274																PHASE 4
75	BLUE RIDGE	EB BLUE RIDGE FROM START (WEST END OF PROJECT) TO FIRST SIGNAL	83	702		1348	2				36	48	10				24		PHASE 5
75	BLUE RIDGE	EB BLUE RIDGE FROM FIRST SIGNAL TO SECOND SIGNAL (BRIDGE)	976																PHASE 5
75	BLUE RIDGE	EB BLUE RIDGE FROM SECOND SIGNAL TO END (EAST END OF PROJECT)	731	313		747					36								PHASE 5
75	BLUE RIDGE	NB I-49 RAMP TO BLUE RIDGE BLVD				14													PHASE 5
75-76	BLUE RIDGE	SB I-49 RAMP TO BLUE RIDGE BLVD	518	82	393	115	1	1	1	1	60		518	82	115	4	60		PHASE 5
		SUBTOTALS:	3734	1180	393	2746	9	5	3	1	240	48	3734	1180	2746	17	240	48	
		USE:	4147			2746	9	5	3	1	240	48	6775			17	240	48	

NOTE: I.W. QUANTITIES ARE NOT DIVIDED BY 4 IN THE TOTALS.
I.W. QUANTITIES ARE DIVIDED BY 4 IN THE "USE" TOTALS.

L09292

SUMMARY SHEET
SHEET 4 OF 19

NOTE: FOR REFERENCE ONLY. USE GRAND TOTAL FOR PAY QUANTITY ON SHEET 5 OF 19

"THIS MEDIA SHOULD NOT BE CONSIDERED A CERTIFIED DOCUMENT."

DATE PREPARED 1/8/2014
ROUTE VAR. STATE MO
DISTRICT KC SHEET NO. 3
COUNTY JACKSON
JOB NO. J4P2191
CONTRACT ID.
PROJECT NO.
BRIDGE NO. VARIES

DESCRIPTION | DATE

IF A SEAL IS PRESENT ON THIS SHEET IT HAS BEEN ELECTRONICALLY SEALED AND DATED.

MISSOURI HIGHWAYS AND TRANSPORTATION COMMISSION
105 WEST CAPITOL
JEFFERSON CITY, MO 65102
1-888-ASK-MODOT (1-888-275-6636)

REV.

MISSOURI HIGHWAYS AND TRANSPORTATION COMMISSION

SUMMARY OF QUANTITIES

TEMPORARY PAVEMENT MARKING SUMMARY									
SHEET NO.	ROUTE	4" S.W. (LF)	4" S.Y. (LF)	TURN ARROW (LEFT) (EA)	24" STOP BAR (LF)	4" TEMP. PVMT. MARKING REMOVAL (LF)	TURN ARROW REMOVAL (EA)	24" STOP BAR REMOVAL (LF)	DESCRIPTION
23-28	WOODS CHAPEL	4835	3681	6	24	8516	6	24	A21211
44-46,74-75	BLUE RIDGE BLVD	7045	5755	10	240	12800	10	240	L09292
15-18	I-70 OVER JACKSON	5060	3060			8120			A03154
19-22	291 OVER I-470	1174	2045			3219			A21201
48-55	I-670EB/WB AND I-670 RAMPS	38423	18024			56447			A31361/A31632/A31391/A31401
40-43	MO 7 OVER WEST FIRE PRARIE CREEK	758	2000			2758			A42961
56-58	LEES SUMMIT RD OVER I-70	2883	2475		80	5358		80	A37631
30-38	US-71NB/SB OVER BLUE RIVER	7358	7358			14716			A27331/A27452
N/A	O'BRIEN RD OVER US-50								A24461 (CLOSURE)
N/A	SUMMIT ST OVER I-670								A31412 (CLOSURE)
	GRAND TOTALS:	67536	44398	16	344	111934	16	344	
	USE:	67536	44398	16	344	111934 ✳	16 ✳	344 ✳	

PERMANENT PAVEMENT MARKING SUMMARY																	
SHEET NO.	ROUTE	6" S.W. (LF)	6" I.W. (LF)	6" D.E (LF)	6" S.Y. (LF)	6" I.Y. (LF)	TRN ARW (LEFT) (EA)	TRN ARW (RIGHT) (EA)	TURN ARROW (STRAIGHT) (EA)	TRN ARW (STRT-LEFT) (EA)	24" STOP BAR (LF)	24" S.Y. BAR (LF)	6" PERM. PVMT. MARKING REMOVAL (LF)	24" STOP BAR REMOVAL (LF)	24" S.Y. BAR REMOVAL (LF)	TURN ARROW REMOVAL (EA)	DESCRIPTION
23-28.68	WOODS CHAPEL	2349	291		881		4				24		3303	24		4	A21211
74-76	BLUE RIDGE BLVD	3734	1180	393	2746		9	3	5	1	240	48	6775	240	48	17	L09292
62-65	I-70 OVER JACKSON	1100	5020		1100								3455				A03154
66-67	291 OVER I-470		1382										346				A21201
77-80	I-670EB/WB AND I-670 RAMPS	9582	20076		8880						38		23481	38			A31361/A31632/A31391/A31401
72-73	MO 7 OVER WEST FIRE PR. CREEK				1000	1000							1250				A42961
81	LEES SUMMIT RD OVER I-70	3499	564								72		3406	72			A37631
69-71	US-71NB/SB OVER BLUE RIVER	3679	1363		3679								8721				A27331/A27452
N/A	O'BRIEN RD OVER US-50																A24461 (CLOSURE)
N/A	SUMMIT ST OVER I-670																A31412 (CLOSURE)
	GRAND TOTALS	23709	29876	392	18286	1000	13	3	5	1	374	48	50737	374	48	21	
	USE	31530			18536		16		5	1	374	48	163437 ✳✳			37 ✳✳	

✳ THIS QUANTITY WILL BE COMBINED WITH THE PERMANENT PAVEMENT MARKING REMOVAL QUANITY TO PRODUCE ONE PAY ITEM.

✳✳ THIS QUANTITY INCLUDES THE PAVEMENT MARKING REMOVAL AND TURN ARROW REMOVAL QUANTITY FOR BOTH PERMANENT AND TEMPORARY PAVEMENT MARKING.

SUMMARY SHEET
SHEET 5 OF 19

"THIS MEDIA SHOULD NOT BE CONSIDERED A CERTIFIED DOCUMENT."

DATE PREPARED 1/8/2014

ROUTE	STATE
VAR.	MO
DISTRICT	SHEET NO.
KC	3

COUNTY: JACKSON

JOB NO. J4P2191

CONTRACT ID.

PROJECT NO.

BRIDGE NO. VARIES

DATE	DESCRIPTION

MISSOURI HIGHWAYS AND TRANSPORTATION COMMISSION

105 WEST CAPITOL
JEFFERSON CITY, MO 65102
1-888-ASK-MODOT (1-888-275-6636)

IF A SEAL IS PRESENT ON THIS SHEET IT HAS BEEN ELECTRONICALLY SEALED AND DATED.

REV.

MISSOURI HIGHWAYS AND TRANSPORTATION COMMISSION

SUMMARY OF QUANTITIES

GUARDRAIL ROADWAY ITEMS SUMMARY

SHEET NO.	ROUTE	LOCATION	BRIDGE ANCHOR (EA)	ASYMETRICAL TRANSITION (EA)	GUARDRAIL TRANSITION (EA)	TYPE A GUARDRAIL (LF)	TYPE A CRASHWORTHY END TERMINAL (EA)	TERMINAL ANCHOR ENDS (EA)	DESCRIPTION
4	291 SB OVER I-470 NB	NW CORNER							A21201
4	291 SB OVER I-470 NB	SW CORNER	1	1		400		1	A21201
4	291 SB OVER I-470 NB	SE CORNER	1	1		400		1	A21201
5	WOODS CHAPEL RD OVER I-470	NW CORNER	1	1		68.75			A21211
5	WOODS CHAPEL RD OVER I-470	NE CORNER	1	1		6.25	1		A21211
5	WOODS CHAPEL RD OVER I-470	SW CORNER	1	1		25	1		A21211
5	WOODS CHAPEL RD OVER I-470	SE CORNER	1	1		56.25			A21211
6	O'BRIEN RD OVER US-50	NW CORNER	1	1		68.75	1		A24461
6	O'BRIEN RD OVER US-50	NE CORNER	1	1		62.5	1		A24461
6	O'BRIEN RD OVER US-50	SW CORNER	1	1		237.5	1		A24461
6	O'BRIEN RD OVER US-50	SE CORNER	1	1		25	1		A24461
N/A	71 NB OVER BLUE RIVER	SW CORNER	1		1				A27331
N/A	71 NB OVER BLUE RIVER	SE CORNER	1		1				A27331
N/A	71 SB OVER BLUE RIVER	NW CORNER	1		1				A27452
N/A	71 SB OVER BLUE RIVER	NE CORNER	1		1				A27452
N/A	71 SB OVER BLUE RIVER	SW CORNER	1		1				A27452
N/A	RAMP W-E (WYOMING ST TO I-670 EB)	NW CORNER	1		1				A31391
N/A	RAMP W-E (WYOMING ST TO I-670 EB)	SW CORNER	1	1		50	1		A31391
N/A	RAMP E-W I-670 WB TO WYOMING ST)								A31401
N/A	RAMP E-W I-670 WB TO WYOMING ST)								A31401
7	LEE'S SUMMIT RD OVER I-70	NW CORNER	1	1			1		A37631
7	LEE'S SUMMIT RD OVER I-71	NE CORNER	1	1					A37631
7	LEE'S SUMMIT RD OVER I-72	SW CORNER	1	1			1		A37631
7	LEE'S SUMMIT RD OVER I-73	SE CORNER	1	1			1		A37631
N/A	MO-7 OVER WEST FIRE PRARIE CREEK	NW CORNER	1	1		112.5	1		A42961
N/A	MO-7 OVER WEST FIRE PRARIE CREEK	NE CORNER	1	1			1		A42961
N/A	MO-7 OVER WEST FIRE PRARIE CREEK	SW CORNER	1	1			1		A42961
N/A	MO-7 OVER WEST FIRE PRARIE CREEK	SE CORNER	1	1		112.5	1		A42961
8-9	BLUE RIDGE BLVD OVER I-49	NW CORNER	1		1				L09292
8-9	BLUE RIDGE BLVD OVER I-49	NE CORNER	1		1				L09292
8-9	BLUE RIDGE BLVD OVER I-49	SW CORNER							L09292
8-9	BLUE RIDGE BLVD OVER I-49	SE CORNER							L09292
8-9	BLUE RIDGE BLVD OVER I-49	WEST MEDIAN							L09292
8-9	BLUE RIDGE BLVD OVER I-49	EAST MEDIAN							L09292
		GRAND TOTALS	27	19	8	1625	14	2	

NOTE: TYPE A CRASHWORTHY END TERMINAL WILL CONNECT TO ASYMETRICAL TRANSITION ON BRIDGE A37631 & THE NE AND SW CORNER OF BRIDGE A42961
NOTE: ONLY THE BRIDGE ANCHOR AND TRANSITION SECTION WILL BE REPLACED ON BRIDGES: A27331, A27452, AND THE NW AND NE CORNER OF L09292

"THIS MEDIA SHOULD NOT BE CONSIDERED A CERTIFIED DOCUMENT."

DATE PREPARED 1/8/2014
ROUTE VAR. | STATE MO
DISTRICT KC | SHEET NO. 3
COUNTY JACKSON
JOB NO. J4P2191
CONTRACT ID.
PROJECT NO.
BRIDGE NO. VARIES

DESCRIPTION | DATE

MISSOURI HIGHWAYS AND TRANSPORTATION COMMISSION
105 WEST CAPITOL
JEFFERSON CITY, MO 65102
1-888-ASK-MODOT (1-888-275-6636)

IF A SEAL IS PRESENT ON THIS SHEET IT HAS BEEN ELECTRONICALLY SEALED AND DATED.

REV.

MISSOURI HIGHWAYS AND TRANSPORTATION COMMISSION

SUMMARY OF QUANTITIES

ROADWAY ITEMS SUMMARY

SHEET NO.	ROUTE	LOCATION	RUBBLIZE CONCRETE SLOPE & DRAIN (SY)	TYPE 1 ROCK DITCH LINER (CY)	FURNISHING TYPE 1 ROCK DITCH LINER (CY)	GEOTEXTILE FABRIC (SY)	TYPE 2 ROCK BLANKET (CY)	FURNISHING TYPE 2 ROCK BLANKET (CY)	FLOWABLE FILL (CY)	PARTIAL DEPTH REPAIR (CY)	4" CONCRETE SIDEWALK (SY)	TRUNCATED DOME (SF)	6" CONCRETE MEDIAN STRIP (SY)	BP-1 ASPHALT (TON)	TYPE A CONCRETE GUTTER (LF)	CONCRETE CURB RAMP (SY)	BRIDGE
4	291 SB OVER I-470 NB	NW CORNER	7	3	3	10	17	17									A21201
5	WOODS CHAPEL RD OVER I-470	NW CORNER	83						3					4			A21211
5	WOODS CHAPEL RD OVER I-470	NE CORNER												4			A21211
5	WOODS CHAPEL RD OVER I-470	SE CORNER	39														A21211
6	O'BRIEN RD OVER US-50	NW CORNER	6	4	4	17	17	17		0.1							A24461
6	O'BRIEN RD OVER US-50	NE CORNER	6	4	4	17	17	17									A24461
6	O'BRIEN RD OVER US-50	SW CORNER	28							1.5							A24461
6	O'BRIEN RD OVER US-50	SE CORNER	6	4	4	17	17	17									A24461
7	LEE'S SUMMIT RD OVER I-70	NW CORNER									298	75				34	A37631
7	LEE'S SUMMIT RD OVER I-70	NE CORNER										23				16	A37631
7	LEE'S SUMMIT RD OVER I-70	SW CORNER									212	38	4			22	A37631
7	LEE'S SUMMIT RD OVER I-70	SE CORNER										74			30	30	A37631
8-9	BLUE RIDGE BLVD OVER I-49	WEST MEDIAN											109	6			L09292
8-9	BLUE RIDGE BLVD OVER I-49	EAST MEDIAN											95	6			L09292
		GRAND TOTALS	173	15	15	61	68	68	3	1.6	511	210	208	20	30	103	

SUMMARY SHEET
SHEET 7 OF 19

"THIS MEDIA SHOULD NOT BE CONSIDERED A CERTIFIED DOCUMENT."

DATE PREPARED 1/8/2014

ROUTE VAR. | STATE MO

DISTRICT KC | SHEET NO. 3

COUNTY JACKSON

JOB NO. J4P2191

CONTRACT ID.

PROJECT NO.

BRIDGE NO. VARIES

DESCRIPTION | DATE

MISSOURI HIGHWAYS AND TRANSPORTATION COMMISSION

105 WEST CAPITOL
JEFFERSON CITY, MO 65102
1-888-ASK-MODOT (1-888-275-6636)

IF A SEAL IS PRESENT ON THIS SHEET IT HAS BEEN ELECTRONICALLY SEALED AND DATED.

REV.

MISSOURI HIGHWAYS AND TRANSPORTATION COMMISSION

SUMMARY OF QUANTITIES

CONTRACTOR FURNISHED SURVEYING
LUMP SUM - 1

MOBILIZATION
LUMP SUM - 1

SEEDING SUMMARY	
SHEET NO.	SEEDING - COOL SEASON MIXTURES (ACRE)
7	1
TOTAL:	1

REMOVAL OF IMPROVEMENTS SUMMARY

SHEET NO.	ROUTE	LOCATION	BRIDGE ANCHOR REMOVAL (EA)	GUARDRAIL TRANSITION REMOVAL (EA)	TYPE A GUARDRAIL REMOVAL (LF)	4" CONCRETE SIDEWALK REMOVAL (SY)	CONCRETE MEDIAN STRIP (SY)	CURB RAMP (EA)	DESCRIPTION
N/A	I-70 WB OVER JACKSON AVE	NW CORNER							A03154
N/A	291 SB OVER I-470 NB	SW CORNER							A21201
N/A	WOODS CHAPEL RD OVER I-470	SE CORNER	4	4	280		95		A21211
N/A	O'BRIEN RD OVER US-50	NW CORNER	4	4	600				A24461
N/A	71 NB OVER BLUE RIVER	NE CORNER	2	2					A27331
N/A	71 SB OVER BLUE RIVER	SW CORNER	3	3					A27452
N/A	I-670 WB OVER VARIOUS STREETS	SE CORNER							A31361
N/A	I-670 EB OVER VARIOUS STREETS	NW CORNER							A31362
N/A	WYOMING TO I-670 RAMP	NE CORNER	2	2	100				A31391
N/A	I-670 RAMP TO WYOMING	SW CORNER							A31401
N/A	SUMMIT STREET OVER I-670	SE CORNER							A31412
N/A	LEE'S SUMMIT RD OVER I-70	ALL	4	4		570		16	A37631
N/A	MO-7 OVER WEST FIRE PRAIRIE CREEK	SE CORNER	4	4	400				A42961
N/A	BLUE RIDGE BLVD OVER I-49	NW CORNER	2	2			208		L09292
		TOTALS	25	25	1380	570	303		
		LUMP SUM TOTAL	1						

1 REVISED

NOTE: REMOVE ALL GUARDRAIL ON BRIDGES: A21211, A24461, SW CORNER OF A31391, A37631, & A42961

NOTE: REMOVE ONLY THE BRIDGE ANCHOR AND TRANSISTION SECTION ON BRIDGES: A27331, A27452, NW CORNER OF A31391, NW AND NE CORNER OF L09292.

SUMMARY SHEET
SHEET 8 OF 19

"THIS MEDIA SHOULD NOT BE CONSIDERED A CERTIFIED DOCUMENT."

DATE PREPARED	
2/13/2014	
ROUTE: VAR.	STATE: MO
DISTRICT: KC	SHEET NO.: 3
COUNTY: JACKSON	
JOB NO.: J4P2191	
CONTRACT ID.	
PROJECT NO.	
BRIDGE NO.: VARIES	

DATE	DESCRIPTION

MISSOURI HIGHWAYS AND TRANSPORTATION COMMISSION
105 WEST CAPITOL
JEFFERSON CITY, MO 65102
1-888-ASK-MODOT (1-888-275-6636)

IF A SEAL IS PRESENT ON THIS SHEET IT HAS BEEN ELECTRONICALLY SEALED AND DATED.

REV.

EFFECTIVE: 08-01-2012

SIGN	SIZE (IN.)	AREA (SQ. FT.)	QTY	TOTAL AREA	QTY RELOC	TOTAL RELOC AREA	DESCRIPTION
WARNING SIGNS							
W01-1L	48X48	16.00					TURN (SYMBOL LEFT ARROW)
W01-1R	48X48	16.00					TURN (SYMBOL RIGHT ARROW)
W01-2L	48X48	16.00					CURVE (SYMBOL LEFT ARROW)
W01-2R	48X48	16.00					CURVE (SYMBOL RIGHT ARROW)
W01-3L	48X48	16.00					REVERSE TURN (SYMBOL LEFT ARROW)
W01-3R	48X48	16.00					REVERSE TURN (SYMBOL RIGHT ARROW)
W01-4L	48X48	16.00					REVERSE CURVE (SYMBOL LEFT ARROW)
W01-4R	48X48	16.00					REVERSE CURVE (SYMBOL RIGHT ARROW)
W01-4bL	48X48	16.00					DOUBLE ARROW REVERSE CURVE (SYMBOL LEFT ARROWS)
W01-4bR	48X48	16.00					DOUBLE ARROW REVERSE CURVE (SYMBOL RIGHT ARROWS)
W01-4cL	48X48	16.00					TRIPLE ARROW REVERSE CURVE (SYMBOL LEFT ARROWS)
W01-4cR	48X48	16.00					TRIPLE ARROW REVERSE CURVE (SYMBOL RIGHT ARROWS)
W01-6	60X30	12.50					HORIZONTAL ARROW (SYMBOL)
W01-6a	72X36	18.00					HORIZONTAL ARROW (SYMBOL ON PERMANENT BARRICADE)
W01-7	60X30	12.50					DOUBLE HEAD HORIZONTAL ARROW (SYMBOL)
W01-7a	72X36	18.00					DOUBLE HEAD HORIZONTAL ARROW (SYMBOL ON PERMANENT BARRICADE)
W01-8	18X24	3.00					CHEVRON (SYMBOL)
W01-8a	30X36	7.50					CHEVRON (SYMBOL FOR DIVIDED HIGHWAYS)
W03-1	48X48	16.00					STOP AHEAD (SYMBOL)
W03-2	48X48	16.00					YIELD AHEAD (SYMBOL)
W03-3	48X48	16.00					SIGNAL AHEAD (SYMBOL)
W03-4	48X48	16.00					BE PREPARED TO STOP
W03-5	48X48	16.00	2	32			SPEED LIMIT AHEAD
W04-1L	48X48	16.00					MERGE (SYMBOL FROM LEFT)
W04-1R	48X48	16.00					MERGE (SYMBOL FROM RIGHT)
W05-1	48X48	16.00					ROAD/BRIDGE/RAMP NARROWS
W05-3	48X48	16.00					ONE LANE BRIDGE
W05-5	48X48	16.00					NARROW LANES
W06-1	48X48	16.00					DIVIDED HIGHWAY (SYMBOL)
W06-2	48X48	16.00					DIVIDED HIGHWAY END (SYMBOL)
W06-3	48X48	16.00					TWO WAY TRAFFIC (SYMBOL)
W07-3a	30X24	5.00					NEXT XX MILES (PLAQUE)
W08-1	48X48	16.00					BUMP
W08-2	48X48	16.00					DIP
W08-3	48X48	16.00					PAVEMENT ENDS
W08-4	48X48	16.00					SOFT SHOULDER
W08-5	48X48	16.00					SLIPPERY WHEN WET (SYMBOL)
W08-6	48X48	16.00					TRUCK CROSSING WITH FLAGS
W08-6c	48X48	16.00					TRUCK ENTRANCE
W08-7	36X36	9.00					LOOSE GRAVEL
W08-9	48X48	16.00					LOW SHOULDER
W08-11	48X48	16.00					UNEVEN LANES
W08-12	48X48	16.00					NO CENTER LINE
W10-1	42 RND.	9.62					RAILROAD CROSSING
W012-1	24X24	4.00					DOUBLE DOWN ARROW (SYMBOL)
W012-2	48X48	16.00					LOW CLEARANCE (SYMBOL)
W012-2x	24X18	3.00					LOW CLEARANCE (PLAQUE)
W012-2a	84X24	14.00					OVERHEAD LOW CLEARANCE (FEET AND INCHES)
W08-15	48X48	16.00					GROOVED PAVEMENT
W08-15p	30X24	5.00					MOTORCYCLE (PLAQUE)
W08-17	48X48	16.00					SHOULDER DROP-OFF (SYMBOL)
W08-17p	30X24	5.00					SHOULDER DROP-OFF (PLAQUE)
SPECIAL	120X60	50.00					LOW CLEARANCE XX FT XX IN XX MILES AHEAD
SPECIAL	120X60	50.00					WIDTH RESTRICTION XX FT XX IN XX MILES AHEAD
W013-1	30X30	6.25					ADVISORY SPEED (PLAQUE)
W016-2	30X24	5.00					XXX FEET (PLAQUE)
W016-3	30X24	5.00					X MILE (PLAQUE)
W020-1	48X48	16.00	2	32			ROAD/BRIDGE/RAMP WORK AHEAD
W020-2	48X48	16.00					DETOUR AHEAD
W020-3	48X48	16.00					ROAD CLOSED AHEAD
W020-4	48X48	16.00					ONE LANE ROAD AHEAD
W020-5	48X48	16.00	2	32			RIGHT/CENTER/LEFT LANE CLOSED AHEAD
W020-5a	48X48	16.00					2 RIGHT/CENTER/LEFT LANES CLOSED AHEAD
W020-6a	48X48	16.00	2	32			RIGHT/CENTER/LEFT LANE CLOSED
W020-7a	48X48	16.00					FLAGGER (SYMBOL) WITH FLAGS
W021-2	36X36	9.00					FRESH OIL
W021-5b	48X48	16.00					SHOULDER WORK AHEAD
W022-1	48X48	16.00					BLASTING ZONE AHEAD
W022-2	42X36	10.50					TURN OFF 2-WAY RADIO AND PHONE
W022-3	42X36	10.50					END BLASTING ZONE
W022-6e	21X15	2.19					WET PAINT (ARROW PIVOTS)
GUIDE SIGNS							
SPECIAL	36X36	9.00					FRESH OIL/LOOSE GRAVEL
E05-1	36X48	12.00					GORE EXIT
E05-2	48X36	12.00					EXIT OPEN
E05-2a	48X36	12.00					EXIT CLOSED
G020-1	60X24	10.00					ROAD WORK NEXT XX MILES
G020-2	48X24	8.00	2	16			END ROAD WORK
G020-4	36X18	4.50					PILOT CAR FOLLOW ME
SPECIAL	42X30	8.75					PLEASE WAIT FOR PILOT CAR
G020-5aP	36X24	6.00	2	12			WORK ZONE (PLAQUE)
M04-8a	24X18	3.00					END DETOUR
M04-9L	48X36	12.00					DETOUR (LEFT ARROW)
M04-9R	48X36	12.00					DETOUR (RIGHT ARROW)
M04-10L	48X18	6.00					DETOUR (ARROW LEFT)
M04-10R	48X18	6.00					DETOUR (ARROW RIGHT)
M04-10R	XXXX	XXXX					
M04-10R	XXXX	XXXX					
REGULATORY SIGNS							
R1-1	48X48	13.25					STOP
R1-2	48 TRI.	6.93					YIELD
R1-2a	36X36	9.00					TO ONCOMING TRAFFIC (PLAQUE)
R1-3	20X9	1.25					X-WAY (PLAQUE)
R2-1	36X48	12.00	4	48			SPEED LIMIT XX
R3-1	48X48	16.00					NO RIGHT TURN (SYMBOL)
R3-2	48X48	16.00					NO LEFT TURN (SYMBOL)
R3-3	36X36	9.00					NO TURNS
R3-4	48X48	16.00					NO U-TURN (SYMBOL)
R3-7L	30X30	6.25					LEFT LANE MUST TURN LEFT
R3-7R	30X30	6.25					RIGHT LANE MUST TURN RIGHT
R4-1	36X48	12.00					DO NOT PASS
R4-2	36X48	12.00					PASS WITH CARE
R4-7aL	36X48	12.00					KEEP LEFT (HORIZONTAL ARROW)
R4-7a	36X48	12.00					KEEP RIGHT (HORIZONTAL ARROW)
R5-1	30X30	6.25					DO NOT ENTER
R5-1a	36X24	6.00					WRONG WAY
R6-1L	48X18	6.00					ONE WAY ARROW (LEFT)
R6-1R	48X18	6.00					ONE WAY ARROW (RIGHT)
R6-2L	24X30	5.00					ONE WAY (LEFT)
R6-2R	24X30	5.00					ONE WAY (RIGHT)
R10-6	24X36	6.00					STOP HERE ON RED (45° ARROW)
R11-2	48X30	10.00					ROAD CLOSED
R11-3a	60X30	12.50					ROAD CLOSED XX MILES AHEAD LOCAL TRAFFIC ONLY
R11-4	60X30	12.50					ROAD CLOSED TO THRU TRAFFIC
S4-4	36X15	3.75					WHEN FLASHING
CONST-3A	60X48	20.00					FINE SIGN
CONST-3X	56X12	4.67					SPEEDING/PASSING (PLATE)
MISCELLANEOUS SIGNS							
SPECIAL	36X48	12.00					POINT OF PRESENCE
SPECIAL	96X48	32.00					POINT OF PRESENCE
CONST-7-48	48X24	8.00					RATE OUR WORK ZONE
CONST-7-72	72X36	18.00					RATE OUR WORK ZONE
616-10.05 CONSTRUCTION SIGNS TOTAL							
616-10.10 RELOCATED SIGNS TOTAL							

NOTE: QUANTITIES ON THIS SHEET ARE NOT PAY ITEM VALUES AND ARE FOR REFERENCE ONLY

NOTE: SEE "PAY TOTAL" QUANTITY SHEET FOR PAY ITEM VALUES

ITEM NUMBER	TOTAL QTY	DESCRIPTION
6122008		IMPACT ATTENUATOR (8 SAND BARRELS)
6122009		IMPACT ATTENUATOR (9 SAND BARRELS)
6122010		IMPACT ATTENUATOR (10 SAND BARRELS)
6122012	2	IMPACT ATTENUATOR (12 SAND BARRELS)
6122014		IMPACT ATTENUATOR (14 SAND BARRELS)
6122017		IMPACT ATTENUATOR (17 SAND BARRELS)
6122019		IMPACT ATTENUATOR (19 SAND BARRELS)
6122020		REPLACEMENT SAND BARREL
6122030	2	IMPACT ATTENUATOR ARRAY (RELOCATION)
6123000A		TRUCK OR TRAILER MOUNTED ATTENUATOR (TMA)
6161007		SPEED LIMIT AND STROBE LIGHT ASSEMBLY
6161008		ADVANCED WARNING RAIL SYSTEM
6161009	10	FLAG ASSEMBLY
6161020		CHANNELIZER (DRUM-LIKE)
6161022		CHANNELIZER (CONES)
6161024	5	CHANNELIZER (TRIM LINE) WITH LIGHT
6161025	47	CHANNELIZER (TRIM LINE)
6161026		CHANNELIZER (VERTICAL PANEL)
6161027		CHANNELIZER (VERTICAL PANEL) WITH LIGHT
6161028		CHANNELIZER
6161030		TYPE III MOVEABLE BARRICADE
6161031		TYPE III MOVEABLE BARRICADE WITH LIGHT
6161033		DIRECTION INDICATOR BARRICADE
6161034		DIRECTION INDICATOR BARRICADE, WITH LIGHT
6161040	1	FLASHING ARROW PANEL
6161047		TYPE III OBJECT MARKER
6161051		WARNING LIGHT, TYPE A
6161052		WARNING LIGHT, TYPE B
6161053		WARNING LIGHT, TYPE C
6161055		SEQUENTIAL FLASHING WARNING LIGHT
6161070		TUBULAR MARKER
6161095		RADAR SPEED ADVISORY SYSTEM
6161096		CHANGEABLE MESSAGE SIGN, COMMISSION FURNISHED/RETAINED
6161098		CHANGEABLE MESSAGE SIGN, CONTRACTOR FURNISHED/RETAINED
6161100		CHANGEABLE MESSAGE SIGN, CONTRACTOR FURNISHED/COMMISSION RETAINED
6173600D	75	CONTRACTOR FURNISHED/RETAINED TEMPORARY TRAFFIC BARRIER
6173602B		CONTRACTOR FURNISHED/COMMISSION RETAINED TEMPORARY TRAFFIC BARRIER
6174000A		TEMPORARY TRAFFIC BARRIER HEIGHT TRANSITION
6175010A	75	RELOCATING TEMPORARY TRAFFIC BARRIER
6176000B		COMMISSION FURNISHED/RETAINED TEMPORARY TRAFFIC BARRIER
6177000B		COMMISSION FURNISHED/RETAINED TEMPORARY TRAFFIC BARRIER HEIGHT TRANSITION
9019400		TEMPORARY LIGHTING
9029400		TEMPORARY TRAFFIC SIGNALS
9029401		TEMPORARY TRAFFIC SIGNALS AND LIGHTING

A03154 SUBTOTALS
SUMMARY SHEET
SHEET 9 OF 19

"THIS MEDIA SHOULD NOT BE CONSIDERED A CERTIFIED DOCUMENT."

DATE PREPARED: 12/15/2013

ROUTE	STATE
VAR.	MO
DISTRICT	SHEET NO.
KC	3

COUNTY: JACKSON

JOB NO.: J4P2191

CONTRACT ID.

PROJECT NO.

BRIDGE NO.: A03154

DATE	DESCRIPTION

MISSOURI HIGHWAYS AND TRANSPORTATION COMMISSION

105 WEST CAPITOL
JEFFERSON CITY, MO 65102
1-888-ASK-MODOT (1-888-275-6636)

IF A SEAL IS PRESENT ON THIS SHEET IT HAS BEEN ELECTRONICALLY SEALED AND DATED.

EFFECTIVE: 08-01-2012

NOTE: QUANTITIES ON THIS SHEET ARE NOT PAY ITEM VALUES AND ARE FOR REFERENCE ONLY

NOTE: SEE "PAY TOTAL" QUANTITY SHEET FOR PAY ITEM VALUES

SIGN	SIZE (IN.)	AREA (SQ. FT.)	QTY	TOTAL AREA	QTY RELOC	TOTAL RELOC AREA	DESCRIPTION
WARNING SIGNS							
W01-1L	48X48	16.00					TURN (SYMBOL LEFT ARROW)
W01-1R	48X48	16.00					TURN (SYMBOL RIGHT ARROW)
W01-2L	48X48	16.00					CURVE (SYMBOL LEFT ARROW)
W01-2R	48X48	16.00					CURVE (SYMBOL RIGHT ARROW)
W01-3L	48X48	16.00					REVERSE TURN (SYMBOL LEFT ARROW)
W01-3R	48X48	16.00					REVERSE TURN (SYMBOL RIGHT ARROW)
W01-4L	48X48	16.00					REVERSE CURVE (SYMBOL LEFT ARROW)
W01-4R	48X48	16.00					REVERSE CURVE (SYMBOL RIGHT ARROW)
W01-4bL	48X48	16.00					DOUBLE ARROW REVERSE CURVE (SYMBOL LEFT ARROWS)
W01-4bR	48X48	16.00					DOUBLE ARROW REVERSE CURVE (SYMBOL RIGHT ARROWS)
W01-4cL	48X48	16.00					TRIPLE ARROW REVERSE CURVE (SYMBOL LEFT ARROWS)
W01-4cR	48X48	16.00					TRIPLE ARROW REVERSE CURVE (SYMBOL RIGHT ARROWS)
W01-6	60X30	12.50					HORIZONTAL ARROW (SYMBOL)
W01-6a	72X36	18.00					HORIZONTAL ARROW (SYMBOL ON PERMANENT BARRICADE)
W01-7	60X30	12.50					DOUBLE HEAD HORIZONTAL ARROW (SYMBOL)
W01-7a	72X36	18.00					DOUBLE HEAD HORIZONTAL ARROW (SYMBOL ON PERMANENT BARRICADE)
W01-8	18X24	3.00					CHEVRON (SYMBOL)
W01-8a	30X36	7.50					CHEVRON (SYMBOL FOR DIVIDED HIGHWAYS)
W03-1	48X48	16.00					STOP AHEAD (SYMBOL)
W03-2	48X48	16.00					YIELD AHEAD (SYMBOL)
W03-3	48X48	16.00					SIGNAL AHEAD (SYMBOL)
W03-4	48X48	16.00					BE PREPARED TO STOP
W03-5	48X48	16.00	2	32			SPEED LIMIT AHEAD
W04-1L	48X48	16.00					MERGE (SYMBOL FROM LEFT)
W04-1R	48X48	16.00					MERGE (SYMBOL FROM RIGHT)
W05-1	48X48	16.00					ROAD/BRIDGE/RAMP NARROWS
W05-3	48X48	16.00					ONE LANE BRIDGE
W05-5	48X48	16.00					NARROW LANES
W06-1	48X48	16.00					DIVIDED HIGHWAY (SYMBOL)
W06-2	48X48	16.00					DIVIDED HIGHWAY END (SYMBOL)
W06-3	48X48	16.00					TWO WAY TRAFFIC (SYMBOL)
W07-3a	30X24	5.00					NEXT XX MILES (PLAQUE)
W08-1	48X48	16.00					BUMP
W08-2	48X48	16.00					DIP
W08-3	48X48	16.00					PAVEMENT ENDS
W08-4	48X48	16.00					SOFT SHOULDER
W08-5	48X48	16.00					SLIPPERY WHEN WET (SYMBOL)
W08-6	48X48	16.00					TRUCK CROSSING WITH FLAGS
W08-6c	48X48	16.00					TRUCK ENTRANCE
W08-7	36X36	9.00					LOOSE GRAVEL
W08-9	48X48	16.00					LOW SHOULDER
W08-11	48X48	16.00					UNEVEN LANES
W08-12	48X48	16.00					NO CENTER LINE
W10-1	42 RND.	9.62					RAILROAD CROSSING
W012-1	24X24	4.00					DOUBLE DOWN ARROW (SYMBOL)
W012-2	48X48	16.00					LOW CLEARANCE (SYMBOL)
W012-2x	24X18	3.00					LOW CLEARANCE (PLAQUE)
W012-2a	84X24	14.00					OVERHEAD LOW CLEARANCE (FEET AND INCHES)
W08-15	48X48	16.00					GROOVED PAVEMENT
W08-15p	30X24	5.00					MOTORCYCLE (PLAQUE)
W08-17	48X48	16.00					SHOULDER DROP-OFF (SYMBOL)
W08-17p	30X24	5.00					SHOULDER DROP-OFF (PLAQUE)
SPECIAL	120X60	50.00					LOW CLEARANCE XX FT XX IN XX MILES AHEAD
SPECIAL	120X60	50.00					WIDTH RESTRICTION XX FT XX IN XX MILES AHEAD
W013-1	30X30	6.25					ADVISORY SPEED (PLAQUE)
W016-2	30X24	5.00					XXX FEET (PLAQUE)
W016-3	30X24	5.00					X MILE (PLAQUE)
W020-1	48X48	16.00	2	32			ROAD/BRIDGE/RAMP WORK AHEAD
W020-2	48X48	16.00					DETOUR AHEAD
W020-3	48X48	16.00					ROAD CLOSED AHEAD
W020-4	48X48	16.00					ONE LANE ROAD AHEAD
W020-5	48X48	16.00	2	32			RIGHT/CENTER/LEFT LANE CLOSED AHEAD
W020-5a	48X48	16.00					2 RIGHT/CENTER/LEFT LANES CLOSED AHEAD
W020-6a	48X48	16.00	2	32			RIGHT/CENTER/LEFT LANE CLOSED
W020-7a	48X48	16.00					FLAGGER (SYMBOL) WITH FLAGS
W021-2	36X36	9.00					FRESH OIL
W021-5b	48X48	16.00					SHOULDER WORK AHEAD
W022-1	48X48	16.00					BLASTING ZONE AHEAD
W022-2	42X36	10.50					TURN OFF 2-WAY RADIO AND PHONE
W022-3	42X36	10.50					END BLASTING ZONE
W022-6e	21X15	2.19					WET PAINT (ARROW PIVOTS)
GUIDE SIGNS							
SPECIAL	36X36	9.00					FRESH OIL/LOOSE GRAVEL
E05-1	36X48	12.00					GORE EXIT
E05-2	48X36	12.00					EXIT OPEN
E05-2a	48X36	12.00					EXIT CLOSED
G020-1	60X24	10.00					ROAD WORK NEXT XX MILES
G020-2	48X24	8.00	2	16			END ROAD WORK
G020-4	36X18	4.50					PILOT CAR FOLLOW ME
SPECIAL	42X30	8.75					PLEASE WAIT FOR PILOT CAR
G020-5aP	36X24	6.00	2	12			WORK ZONE (PLAQUE)
M04-8a	24X18	3.00					END DETOUR
M04-9L	48X36	12.00					DETOUR (LEFT ARROW)
M04-9R	48X36	12.00					DETOUR (RIGHT ARROW)
M04-10L	48X18	6.00					DETOUR (ARROW LEFT)
M04-10R	48X18	6.00					DETOUR (ARROW RIGHT)
M04-10R	XXXX	XXXX					
M04-10R	XXXX	XXXX					
REGULATORY SIGNS							
R1-1	48X48	13.25					STOP
R1-2	48 TRI.	6.93					YIELD
R1-2a	36X36	9.00					TO ONCOMING TRAFFIC (PLAQUE)
R1-3	20X9	1.25					X-WAY (PLAQUE)
R2-1	36X48	12.00	4	48			SPEED LIMIT XX
R3-1	48X48	16.00					NO RIGHT TURN (SYMBOL)
R3-2	48X48	16.00					NO LEFT TURN (SYMBOL)
R3-3	36X36	9.00					NO TURNS
R3-4	48X48	16.00					NO U-TURN (SYMBOL)
R3-7L	30X30	6.25					LEFT LANE MUST TURN LEFT
R3-7R	30X30	6.25					RIGHT LANE MUST TURN RIGHT
R4-1	36X48	12.00					DO NOT PASS
R4-2	36X48	12.00					PASS WITH CARE
R4-7aL	36X48	12.00					KEEP LEFT (HORIZONTAL ARROW)
R4-7a	36X48	12.00					KEEP RIGHT (HORIZONTAL ARROW)
R5-1	30X30	6.25					DO NOT ENTER
R5-1a	36X24	6.00					WRONG WAY
R6-1L	48X18	6.00					ONE WAY ARROW (LEFT)
R6-1R	48X18	6.00					ONE WAY ARROW (RIGHT)
R6-2L	24X30	5.00					ONE WAY (LEFT)
R6-2R	24X30	5.00					ONE WAY (RIGHT)
R10-6	24X36	6.00					STOP HERE ON RED (45° ARROW)
R11-2	48X30	10.00					ROAD CLOSED
R11-3a	60X30	12.50					ROAD CLOSED XX MILES AHEAD LOCAL TRAFFIC ONLY
R11-4	60X30	12.50					ROAD CLOSED TO THRU TRAFFIC
S4-4	36X15	3.75					WHEN FLASHING
CONST-3A	60X48	20.00					FINE SIGN
CONST-3X	56X12	4.67					SPEEDING/PASSING (PLATE)
MISCELLANEOUS SIGNS							
SPECIAL	36X48	12.00					POINT OF PRESENCE
SPECIAL	96X48	32.00					POINT OF PRESENCE
CONST-7-48	48X24	8.00					RATE OUR WORK ZONE
CONST-7-72	72X36	18.00					RATE OUR WORK ZONE
616-10.05 CONSTRUCTION SIGNS TOTAL							
616-10.10 RELOCATED SIGNS TOTAL							

ITEM NUMBER	TOTAL QTY	DESCRIPTION
6122008		IMPACT ATTENUATOR (8 SAND BARRELS)
6122009		IMPACT ATTENUATOR (9 SAND BARRELS)
6122010		IMPACT ATTENUATOR (10 SAND BARRELS)
6122012	2	IMPACT ATTENUATOR (12 SAND BARRELS)
6122014		IMPACT ATTENUATOR (14 SAND BARRELS)
6122017		IMPACT ATTENUATOR (17 SAND BARRELS)
6122019		IMPACT ATTENUATOR (19 SAND BARRELS)
6122020		REPLACEMENT SAND BARREL
6122030	2	IMPACT ATTENUATOR ARRAY (RELOCATION)
6123000A		TRUCK OR TRAILER MOUNTED ATTENUATOR (TMA)
6161007		SPEED LIMIT AND STROBE LIGHT ASSEMBLY
6161008		ADVANCED WARNING RAIL SYSTEM
6161009	10	FLAG ASSEMBLY
6161020		CHANNELIZER (DRUM-LIKE)
6161022		CHANNELIZER (CONES)
6161024	5	CHANNELIZER (TRIM LINE) WITH LIGHT
6161025	40	CHANNELIZER (TRIM LINE)
6161026		CHANNELIZER (VERTICAL PANEL)
6161027		CHANNELIZER (VERTICAL PANEL) WITH LIGHT
6161028		CHANNELIZER
6161030		TYPE III MOVEABLE BARRICADE
6161031		TYPE III MOVEABLE BARRICADE WITH LIGHT
6161033		DIRECTION INDICATOR BARRICADE
6161034		DIRECTION INDICATOR BARRICADE, WITH LIGHT
6161040	1	FLASHING ARROW PANEL
6161047		TYPE III OBJECT MARKER
6161051		WARNING LIGHT, TYPE A
6161052		WARNING LIGHT, TYPE B
6161053		WARNING LIGHT, TYPE C
6161055		SEQUENTIAL FLASHING WARNING LIGHT
6161070		TUBULAR MARKER
6161095		RADAR SPEED ADVISORY SYSTEM
6161096		CHANGEABLE MESSAGE SIGN, COMMISSION FURNISHED/RETAINED
6161098		CHANGEABLE MESSAGE SIGN, CONTRACTOR FURNISHED/RETAINED
6161100		CHANGEABLE MESSAGE SIGN, CONTRACTOR FURNISHED/COMMISSION RETAINED
6173600D	75	CONTRACTOR FURNISHED/RETAINED TEMPORARY TRAFFIC BARRIER
6173602B		CONTRACTOR FURNISHED/COMMISSION RETAINED TEMPORARY TRAFFIC BARRIER
6174000A		TEMPORARY TRAFFIC BARRIER HEIGHT TRANSITION
6175010A	75	RELOCATING TEMPORARY TRAFFIC BARRIER
6176000B		COMMISSION FURNISHED/RETAINED TEMPORARY TRAFFIC BARRIER
6177000B		COMMISSION FURNISHED/RETAINED TEMPORARY TRAFFIC BARRIER HEIGHT TRANSITION
9019400		TEMPORARY LIGHTING
9029400		TEMPORARY TRAFFIC SIGNALS
9029401		TEMPORARY TRAFFIC SIGNALS AND LIGHTING

A21201 SUBTOTALS
SUMMARY SHEET
SHEET 10 OF 19

"THIS MEDIA SHOULD NOT BE CONSIDERED A CERTIFIED DOCUMENT."

DATE PREPARED 12/15/2013

ROUTE	STATE
VAR.	MO
DISTRICT	SHEET NO.
KC	3

COUNTY: JACKSON

JOB NO. J4P2191

CONTRACT ID.

PROJECT NO.

BRIDGE NO. A21201

DESCRIPTION	DATE

MISSOURI HIGHWAYS AND TRANSPORTATION COMMISSION

105 WEST CAPITOL
JEFFERSON CITY, MO 65102
1-888-ASK-MODOT (1-888-275-6636)

IF A SEAL IS PRESENT ON THIS SHEET IT HAS BEEN ELECTRONICALLY SEALED AND DATED.

EFFECTIVE: 08-01-2012

SIGN	SIZE (IN.)	AREA (SQ. FT.)	QTY	TOTAL AREA	QTY RELOC	TOTAL RELOC AREA	DESCRIPTION
WARNING SIGNS							
W01-1L	48X48	16.00					TURN (SYMBOL LEFT ARROW)
W01-1R	48X48	16.00					TURN (SYMBOL RIGHT ARROW)
W01-2L	48X48	16.00					CURVE (SYMBOL LEFT ARROW)
W01-2R	48X48	16.00					CURVE (SYMBOL RIGHT ARROW)
W01-3L	48X48	16.00					REVERSE TURN (SYMBOL LEFT ARROW)
W01-3R	48X48	16.00					REVERSE TURN (SYMBOL RIGHT ARROW)
W01-4L	48X48	16.00					REVERSE CURVE (SYMBOL LEFT ARROW)
W01-4R	48X48	16.00	1	16			REVERSE CURVE (SYMBOL RIGHT ARROW)
W01-4bL	48X48	16.00	2	32			DOUBLE ARROW REVERSE CURVE (SYMBOL LEFT ARROWS)
W01-4bR	48X48	16.00					DOUBLE ARROW REVERSE CURVE (SYMBOL RIGHT ARROWS)
W01-4cL	48X48	16.00					TRIPLE ARROW REVERSE CURVE (SYMBOL LEFT ARROWS)
W01-4cR	48X48	16.00					TRIPLE ARROW REVERSE CURVE (SYMBOL RIGHT ARROWS)
W01-6	60X30	12.50					HORIZONTAL ARROW (SYMBOL)
W01-6a	72X36	18.00					HORIZONTAL ARROW (SYMBOL ON PERMANENT BARRICADE)
W01-7	60X30	12.50					DOUBLE HEAD HORIZONTAL ARROW (SYMBOL)
W01-7a	72X36	18.00					DOUBLE HEAD HORIZONTAL ARROW (SYMBOL ON PERMANENT BARRICADE)
W01-8	18X24	3.00					CHEVRON (SYMBOL)
W01-8a	30X36	7.50					CHEVRON (SYMBOL FOR DIVIDED HIGHWAYS)
W03-1	48X48	16.00					STOP AHEAD (SYMBOL)
W03-2	48X48	16.00					YIELD AHEAD (SYMBOL)
W03-3	48X48	16.00					SIGNAL AHEAD (SYMBOL)
W03-4	48X48	16.00					BE PREPARED TO STOP
W03-5	48X48	16.00	3	48			SPEED LIMIT AHEAD
W04-1L	48X48	16.00					MERGE (SYMBOL FROM LEFT)
W04-1R	48X48	16.00					MERGE (SYMBOL FROM RIGHT)
W05-1	48X48	16.00					ROAD/BRIDGE/RAMP NARROWS
W05-3	48X48	16.00					ONE LANE BRIDGE
W05-5	48X48	16.00					NARROW LANES
W06-1	48X48	16.00					DIVIDED HIGHWAY (SYMBOL)
W06-2	48X48	16.00					DIVIDED HIGHWAY END (SYMBOL)
W06-3	48X48	16.00					TWO WAY TRAFFIC (SYMBOL)
W07-3a	30X24	5.00					NEXT XX MILES (PLAQUE)
W08-1	48X48	16.00					BUMP
W08-2	48X48	16.00					DIP
W08-3	48X48	16.00					PAVEMENT ENDS
W08-4	48X48	16.00					SOFT SHOULDER
W08-5	48X48	16.00					SLIPPERY WHEN WET (SYMBOL)
W08-6	48X48	16.00					TRUCK CROSSING WITH FLAGS
W08-6c	48X48	16.00					TRUCK ENTRANCE
W08-7	36X36	9.00					LOOSE GRAVEL
W08-9	48X48	16.00					LOW SHOULDER
W08-11	48X48	16.00					UNEVEN LANES
W08-12	48X48	16.00					NO CENTER LINE
W10-1	42 RND.	9.62					RAILROAD CROSSING
W012-1	24X24	4.00					DOUBLE DOWN ARROW (SYMBOL)
W012-2	48X48	16.00					LOW CLEARANCE (SYMBOL)
W012-2x	24X18	3.00					LOW CLEARANCE (PLAQUE)
W012-2a	84X24	14.00					OVERHEAD LOW CLEARANCE (FEET AND INCHES)
W08-15	48X48	16.00					GROOVED PAVEMENT
W08-15p	30X24	5.00					MOTORCYCLE (PLAQUE)
W08-17	48X48	16.00					SHOULDER DROP-OFF (SYMBOL)
W08-17p	30X24	5.00					SHOULDER DROP-OFF (PLAQUE)
SPECIAL	120X60	50.00					LOW CLEARANCE XX FT XX IN XX MILES AHEAD
SPECIAL	120X60	50.00					WIDTH RESTRICTION XX FT XX IN XX MILES AHEAD
W013-1	30X30	6.25					ADVISORY SPEED (PLAQUE)
W016-2	30X24	5.00					XXX FEET (PLAQUE)
W016-3	30X24	5.00					X MILE (PLAQUE)
W020-1	48X48	16.00	9	144			ROAD/BRIDGE/RAMP WORK AHEAD
W020-2	48X48	16.00					DETOUR AHEAD
W020-3	48X48	16.00					ROAD CLOSED AHEAD
W020-4	48X48	16.00					ONE LANE ROAD AHEAD
W020-5	48X48	16.00	3	48			RIGHT/CENTER/LEFT LANE CLOSED AHEAD
W020-5a	48X48	16.00	2	32			2 RIGHT/CENTER/LEFT LANES CLOSED AHEAD
W020-6a	48X48	16.00	2	32			RIGHT/CENTER/LEFT LANE CLOSED
W020-7a	48X48	16.00					FLAGGER (SYMBOL) WITH FLAGS
W021-2	36X36	9.00					FRESH OIL
W021-5b	48X48	16.00					SHOULDER WORK AHEAD
W022-1	48X48	16.00					BLASTING ZONE AHEAD
W022-2	42X36	10.50					TURN OFF 2-WAY RADIO AND PHONE
W022-3	42X36	10.50					END BLASTING ZONE
W022-6e	21X15	2.19					WET PAINT (ARROW PIVOTS)
GUIDE SIGNS							
SPECIAL	36X36	9.00					FRESH OIL/LOOSE GRAVEL
E05-1	36X48	12.00					GORE EXIT
E05-2	48X36	12.00					EXIT OPEN
E05-2a	48X36	12.00					EXIT CLOSED
G020-1	60X24	10.00					ROAD WORK NEXT XX MILES
G020-2	48X24	8.00	7	56			END ROAD WORK
G020-4	36X18	4.50					PILOT CAR FOLLOW ME
SPECIAL	42X30	8.75					PLEASE WAIT FOR PILOT CAR
G020-5aP	36X24	6.00	3	18			WORK ZONE (PLAQUE)
M04-8a	24X18	3.00					END DETOUR
M04-9L	48X36	12.00					DETOUR (LEFT ARROW)
M04-9R	48X36	12.00					DETOUR (RIGHT ARROW)
M04-10L	48X18	6.00					DETOUR (ARROW LEFT)
M04-10R	48X18	6.00					DETOUR (ARROW RIGHT)
M04-10R	XXXX	XXXX					
M04-10R	XXXX	XXXX					
REGULATORY SIGNS							
R1-1	48X48	13.25					STOP
R1-2	48 TRI.	6.93					YIELD
R1-2a	36X36	9.00					TO ONCOMING TRAFFIC (PLAQUE)
R1-3	20X9	1.25					X-WAY (PLAQUE)
R2-1	36X48	12.00	6	72			SPEED LIMIT XX
R3-1	48X48	16.00					NO RIGHT TURN (SYMBOL)
R3-2	48X48	16.00	2	32			NO LEFT TURN (SYMBOL)
R3-3	36X36	9.00					NO TURNS
R3-4	48X48	16.00					NO U-TURN (SYMBOL)
R3-7L	30X30	6.25	4	25			LEFT LANE MUST TURN LEFT
R3-7R	30X30	6.25					RIGHT LANE MUST TURN RIGHT
R4-1	36X48	12.00					DO NOT PASS
R4-2	36X48	12.00					PASS WITH CARE
R4-7aL	36X48	12.00					KEEP LEFT (HORIZONTAL ARROW)
R4-7a	36X48	12.00					KEEP RIGHT (HORIZONTAL ARROW)
R5-1	30X30	6.25					DO NOT ENTER
R5-1a	36X24	6.00					WRONG WAY
R6-1L	48X18	6.00					ONE WAY ARROW (LEFT)
R6-1R	48X18	6.00					ONE WAY ARROW (RIGHT)
R6-2L	24X30	5.00					ONE WAY (LEFT)
R6-2R	24X30	5.00					ONE WAY (RIGHT)
R10-6	24X36	6.00					STOP HERE ON RED (45° ARROW)
R11-2	48X30	10.00					ROAD CLOSED
R11-3a	60X30	12.50					ROAD CLOSED XX MILES AHEAD LOCAL TRAFFIC ONLY
R11-4	60X30	12.50					ROAD CLOSED TO THRU TRAFFIC
S4-4	36X15	3.75					WHEN FLASHING
CONST-3A	60X48	20.00					FINE SIGN
CONST-3X	56X12	4.67					SPEEDING/PASSING (PLATE)
MISCELLANEOUS SIGNS							
SPECIAL	36x12	3.00	2	6			TRUCKS
SPECIAL	96X48	32.00					POINT OF PRESENCE
CONST-7-48	48X24	8.00					RATE OUR WORK ZONE
CONST-7-72	72X36	18.00					RATE OUR WORK ZONE
616-10.05 CONSTRUCTION SIGNS TOTAL							
616-10.10 RELOCATED SIGNS TOTAL							

NOTE: QUANTITIES ON THIS SHEET ARE NOT PAY ITEM VALUES AND ARE FOR REFERENCE ONLY

NOTE: SEE "PAY TOTAL" QUANTITY SHEET FOR PAY ITEM VALUES

ITEM NUMBER	TOTAL QTY	DESCRIPTION
6122008	2	IMPACT ATTENUATOR (8 SAND BARRELS)
6122009		IMPACT ATTENUATOR (9 SAND BARRELS)
6122010		IMPACT ATTENUATOR (10 SAND BARRELS)
6122012		IMPACT ATTENUATOR (12 SAND BARRELS)
6122014		IMPACT ATTENUATOR (14 SAND BARRELS)
6122017		IMPACT ATTENUATOR (17 SAND BARRELS)
6122019		IMPACT ATTENUATOR (19 SAND BARRELS)
6122020		REPLACEMENT SAND BARREL
6122030	2	IMPACT ATTENUATOR ARRAY (RELOCATION)
6123000A		TRUCK OR TRAILER MOUNTED ATTENUATOR (TMA)
6161007		SPEED LIMIT AND STROBE LIGHT ASSEMBLY
6161008		ADVANCED WARNING RAIL SYSTEM
6161009	24	FLAG ASSEMBLY
6161020		CHANNELIZER (DRUM-LIKE)
6161022		CHANNELIZER (CONES)
6161024	15	CHANNELIZER (TRIM LINE) WITH LIGHT
6161025	52	CHANNELIZER (TRIM LINE)
6161026		CHANNELIZER (VERTICAL PANEL)
6161027		CHANNELIZER (VERTICAL PANEL) WITH LIGHT
6161028		CHANNELIZER
6161030	6	TYPE III MOVEABLE BARRICADE
6161031		TYPE III MOVEABLE BARRICADE WITH LIGHT
6161033		DIRECTION INDICATOR BARRICADE
6161034		DIRECTION INDICATOR BARRICADE, WITH LIGHT
6161040	2	FLASHING ARROW PANEL
6161047		TYPE III OBJECT MARKER
6161051		WARNING LIGHT, TYPE A
6161052		WARNING LIGHT, TYPE B
6161053		WARNING LIGHT, TYPE C
6161055		SEQUENTIAL FLASHING WARNING LIGHT
6161070		TUBULAR MARKER
6161095		RADAR SPEED ADVISORY SYSTEM
6161096		CHANGEABLE MESSAGE SIGN, COMMISSION FURNISHED/RETAINED
6161098	4	CHANGEABLE MESSAGE SIGN, CONTRACTOR FURNISHED/RETAINED
6161100		CHANGEABLE MESSAGE SIGN, CONTRACTOR FURNISHED/COMMISSION RETAINED
6173600D	700	CONTRACTOR FURNISHED/RETAINED TEMPORARY TRAFFIC BARRIER
6173602B		CONTRACTOR FURNISHED/COMMISSION RETAINED TEMPORARY TRAFFIC BARRIER
6174000A		TEMPORARY TRAFFIC BARRIER HEIGHT TRANSITION
6175010A	700	RELOCATING TEMPORARY TRAFFIC BARRIER
6176000B		COMMISSION FURNISHED/RETAINED TEMPORARY TRAFFIC BARRIER
6177000B		COMMISSION FURNISHED/RETAINED TEMPORARY TRAFFIC BARRIER HEIGHT TRANSITION
9019400		TEMPORARY LIGHTING
9029400		TEMPORARY TRAFFIC SIGNALS
9029401		TEMPORARY TRAFFIC SIGNALS AND LIGHTING

A21211 SUBTOTALS
SUMMARY SHEET
SHEET 11 OF 19

"THIS MEDIA SHOULD NOT BE CONSIDERED A CERTIFIED DOCUMENT."

DATE PREPARED 12/15/2013

ROUTE	STATE
VAR.	MO
DISTRICT	SHEET NO.
KC	3

COUNTY: JACKSON

JOB NO. J4P2191

CONTRACT ID.

PROJECT NO.

BRIDGE NO. A21211

DESCRIPTION	DATE

MISSOURI HIGHWAYS AND TRANSPORTATION COMMISSION

105 WEST CAPITOL
JEFFERSON CITY, MO 65102
1-888-ASK-MODOT (1-888-275-6636)

IF A SEAL IS PRESENT ON THIS SHEET IT HAS BEEN ELECTRONICALLY SEALED AND DATED.

EFFECTIVE: 08-01-2012

NOTE: QUANTITIES ON THIS SHEET ARE NOT PAY ITEM VALUES AND ARE FOR REFERENCE ONLY

NOTE: SEE "PAY TOTAL" QUANTITY SHEET FOR PAY ITEM VALUES

SIGN	SIZE (IN.)	AREA (SQ. FT.)	QTY	TOTAL AREA	QTY RELOC	TOTAL RELOC AREA	DESCRIPTION
WARNING SIGNS							
W01-1L	48X48	16.00	1	16			TURN (SYMBOL LEFT ARROW)
W01-1R	48X48	16.00					TURN (SYMBOL RIGHT ARROW)
W01-2L	48X48	16.00					CURVE (SYMBOL LEFT ARROW)
W01-2R	48X48	16.00					CURVE (SYMBOL RIGHT ARROW)
W01-3L	48X48	16.00					REVERSE TURN (SYMBOL LEFT ARROW)
W01-3R	48X48	16.00					REVERSE TURN (SYMBOL RIGHT ARROW)
W01-4L	48X48	16.00					REVERSE CURVE (SYMBOL LEFT ARROW)
W01-4R	48X48	16.00					REVERSE CURVE (SYMBOL RIGHT ARROW)
W01-4bL	48X48	16.00					DOUBLE ARROW REVERSE CURVE (SYMBOL LEFT ARROWS)
W01-4bR	48X48	16.00					DOUBLE ARROW REVERSE CURVE (SYMBOL RIGHT ARROWS)
W01-4cL	48X48	16.00					TRIPLE ARROW REVERSE CURVE (SYMBOL LEFT ARROWS)
W01-4cR	48X48	16.00					TRIPLE ARROW REVERSE CURVE (SYMBOL RIGHT ARROWS)
W01-6	60X30	12.50	1	13			HORIZONTAL ARROW (SYMBOL)
W01-6a	72X36	18.00					HORIZONTAL ARROW (SYMBOL ON PERMANENT BARRICADE)
W01-7	60X30	12.50					DOUBLE HEAD HORIZONTAL ARROW (SYMBOL)
W01-7a	72X36	18.00					DOUBLE HEAD HORIZONTAL ARROW (SYMBOL ON PERMANENT BARRICADE)
W01-8	18X24	3.00					CHEVRON (SYMBOL)
W01-8a	30X36	7.50					CHEVRON (SYMBOL FOR DIVIDED HIGHWAYS)
W03-1	48X48	16.00					STOP AHEAD (SYMBOL)
W03-2	48X48	16.00					YIELD AHEAD (SYMBOL)
W03-3	48X48	16.00					SIGNAL AHEAD (SYMBOL)
W03-4	48X48	16.00					BE PREPARED TO STOP
W03-5	48X48	16.00					SPEED LIMIT AHEAD
W04-1L	48X48	16.00					MERGE (SYMBOL FROM LEFT)
W04-1R	48X48	16.00					MERGE (SYMBOL FROM RIGHT)
W05-1	48X48	16.00					ROAD/BRIDGE/RAMP NARROWS
W05-3	48X48	16.00					ONE LANE BRIDGE
W05-5	48X48	16.00					NARROW LANES
W06-1	48X48	16.00					DIVIDED HIGHWAY (SYMBOL)
W06-2	48X48	16.00					DIVIDED HIGHWAY END (SYMBOL)
W06-3	48X48	16.00					TWO WAY TRAFFIC (SYMBOL)
W07-3a	30X24	5.00					NEXT XX MILES (PLAQUE)
W08-1	48X48	16.00					BUMP
W08-2	48X48	16.00					DIP
W08-3	48X48	16.00					PAVEMENT ENDS
W08-4	48X48	16.00					SOFT SHOULDER
W08-5	48X48	16.00					SLIPPERY WHEN WET (SYMBOL)
W08-6	48X48	16.00					TRUCK CROSSING WITH FLAGS
W08-6c	48X48	16.00					TRUCK ENTRANCE
W08-7	36X36	9.00					LOOSE GRAVEL
W08-9	48X48	16.00					LOW SHOULDER
W08-11	48X48	16.00					UNEVEN LANES
W08-12	48X48	16.00					NO CENTER LINE
W10-1	42 RND.	9.62					RAILROAD CROSSING
W012-1	24X24	4.00					DOUBLE DOWN ARROW (SYMBOL)
W012-2	48X48	16.00					LOW CLEARANCE (SYMBOL)
W012-2x	24X18	3.00					LOW CLEARANCE (PLAQUE)
W012-2a	84X24	14.00					OVERHEAD LOW CLEARANCE (FEET AND INCHES)
W08-15	48X48	16.00					GROOVED PAVEMENT
W08-15p	30X24	5.00					MOTORCYCLE (PLAQUE)
W08-17	48X48	16.00					SHOULDER DROP-OFF (SYMBOL)
W08-17p	30X24	5.00					SHOULDER DROP-OFF (PLAQUE)
SPECIAL	120X60	50.00					LOW CLEARANCE XX FT XX IN XX MILES AHEAD
SPECIAL	120X60	50.00					WIDTH RESTRICTION XX FT XX IN XX MILES AHEAD
W013-1	30X30	6.25					ADVISORY SPEED (PLAQUE)
W016-2	30X24	5.00					XXX FEET (PLAQUE)
W016-3	30X24	5.00					X MILE (PLAQUE)
W020-1	48X48	16.00					ROAD/BRIDGE/RAMP WORK AHEAD
W020-2	48X48	16.00	2	32			DETOUR AHEAD
W020-3	48X48	16.00	5	80			ROAD CLOSED AHEAD
W020-4	48X48	16.00					ONE LANE ROAD AHEAD
W020-5	48X48	16.00					RIGHT/CENTER/LEFT LANE CLOSED AHEAD
W020-3a	48X48	16.00	2	32			ROAD CLOSED 1000 FT
W020-6a	48X48	16.00					RIGHT/CENTER/LEFT LANE CLOSED
W020-7a	48X48	16.00					FLAGGER (SYMBOL) WITH FLAGS
W021-2	36X36	9.00					FRESH OIL
W021-5b	48X48	16.00					SHOULDER WORK AHEAD
W022-1	48X48	16.00					BLASTING ZONE AHEAD
W022-2	42X36	10.50					TURN OFF 2-WAY RADIO AND PHONE
W022-3	42X36	10.50					END BLASTING ZONE
W022-6e	21X15	2.19					WET PAINT (ARROW PIVOTS)
GUIDE SIGNS							
SPECIAL	36X36	9.00					FRESH OIL/LOOSE GRAVEL
E05-1	36X48	12.00					GORE EXIT
E05-2	48X36	12.00					EXIT OPEN
E05-2a	48X36	12.00					EXIT CLOSED
G020-1	60X24	10.00					ROAD WORK NEXT XX MILES
G020-2	48X24	8.00					END ROAD WORK
G020-4	36X18	4.50					PILOT CAR FOLLOW ME
SPECIAL	42X30	8.75					PLEASE WAIT FOR PILOT CAR
G020-5aP	36X24	6.00					WORK ZONE (PLAQUE)
M04-8a	24X18	3.00	2	6			END DETOUR
M04-9L	48X36	12.00					DETOUR (LEFT ARROW)
M04-9R	48X36	12.00					DETOUR (RIGHT ARROW)
M04-10L	48X18	6.00					DETOUR (ARROW LEFT)
M04-10R	48X18	6.00					DETOUR (ARROW RIGHT)
M04-10R	XXXX	XXXX					
M04-10R	XXXX	XXXX					
REGULATORY SIGNS							
R1-1	48X48	13.25					STOP
R1-2	48 TRI.	6.93					YIELD
R1-2a	36X36	9.00					TO ONCOMING TRAFFIC (PLAQUE)
R1-3	20X9	1.25					X-WAY (PLAQUE)
R2-1	36X48	12.00					SPEED LIMIT XX
R3-1	48X48	16.00					NO RIGHT TURN (SYMBOL)
R3-2	48X48	16.00					NO LEFT TURN (SYMBOL)
R3-3	36X36	9.00					NO TURNS
R3-4	48X48	16.00					NO U-TURN (SYMBOL)
R3-7L	30X30	6.25					LEFT LANE MUST TURN LEFT
R3-7R	30X30	6.25					RIGHT LANE MUST TURN RIGHT
R4-1	36X48	12.00					DO NOT PASS
R4-2	36X48	12.00					PASS WITH CARE
R4-7aL	36X48	12.00					KEEP LEFT (HORIZONTAL ARROW)
R4-7a	36X48	12.00					KEEP RIGHT (HORIZONTAL ARROW)
R5-1	30X30	6.25					DO NOT ENTER
R5-1a	36X24	6.00					WRONG WAY
R6-1L	48X18	6.00					ONE WAY ARROW (LEFT)
R6-1R	48X18	6.00					ONE WAY ARROW (RIGHT)
R6-2L	24X30	5.00					ONE WAY (LEFT)
R6-2R	24X30	5.00					ONE WAY (RIGHT)
R10-6	24X36	6.00					STOP HERE ON RED (45° ARROW)
R11-2	48X30	10.00	4	40			ROAD CLOSED
R11-3a	60X30	12.50					ROAD CLOSED XX MILES AHEAD LOCAL TRAFFIC ONLY
R11-4	60X30	12.50					ROAD CLOSED TO THRU TRAFFIC
S4-4	36X15	3.75					WHEN FLASHING
CONST-3A	60X48	20.00					FINE SIGN
CONST-3X	56X12	4.67					SPEEDING/PASSING (PLATE)
MISCELLANEOUS SIGNS							
SPECIAL	48X48	16.00	7	112			SPECIAL SIGN
SPECIAL	96X48	32.00					POINT OF PRESENCE
CONST-7-48	48X24	8.00					RATE OUR WORK ZONE
CONST-7-72	72X36	18.00					RATE OUR WORK ZONE
616-10.05 CONSTRUCTION SIGNS TOTAL							
616-10.10 RELOCATED SIGNS TOTAL							

ITEM NUMBER	TOTAL QTY	DESCRIPTION
6122008		IMPACT ATTENUATOR (8 SAND BARRELS)
6122009		IMPACT ATTENUATOR (9 SAND BARRELS)
6122010		IMPACT ATTENUATOR (10 SAND BARRELS)
6122012		IMPACT ATTENUATOR (12 SAND BARRELS)
6122014		IMPACT ATTENUATOR (14 SAND BARRELS)
6122017		IMPACT ATTENUATOR (17 SAND BARRELS)
6122019		IMPACT ATTENUATOR (19 SAND BARRELS)
6122020		REPLACEMENT SAND BARREL
6122030		IMPACT ATTENUATOR ARRAY (RELOCATION)
6123000A		TRUCK OR TRAILER MOUNTED ATTENUATOR (TMA)
6161007		SPEED LIMIT AND STROBE LIGHT ASSEMBLY
6161008		ADVANCED WARNING RAIL SYSTEM
6161009	8	FLAG ASSEMBLY
6161020		CHANNELIZER (DRUM-LIKE)
6161022		CHANNELIZER (CONES)
6161024		CHANNELIZER (TRIM LINE) WITH LIGHT
6161025		CHANNELIZER (TRIM LINE)
6161026		CHANNELIZER (VERTICAL PANEL)
6161027		CHANNELIZER (VERTICAL PANEL) WITH LIGHT
6161028	9	CHANNELIZER
6161030	14	TYPE III MOVEABLE BARRICADE
6161031		TYPE III MOVEABLE BARRICADE WITH LIGHT
6161033		DIRECTION INDICATOR BARRICADE
6161034		DIRECTION INDICATOR BARRICADE, WITH LIGHT
6161040		FLASHING ARROW PANEL
6161047		TYPE III OBJECT MARKER
6161051		WARNING LIGHT, TYPE A
6161052		WARNING LIGHT, TYPE B
6161053		WARNING LIGHT, TYPE C
6161055		SEQUENTIAL FLASHING WARNING LIGHT
6161070		TUBULAR MARKER
6161095		RADAR SPEED ADVISORY SYSTEM
6161096		CHANGEABLE MESSAGE SIGN, COMMISSION FURNISHED/RETAINED
6161098		CHANGEABLE MESSAGE SIGN, CONTRACTOR FURNISHED/RETAINED
6161100		CHANGEABLE MESSAGE SIGN, CONTRACTOR FURNISHED/COMMISSION RETAINED
6173600D		CONTRACTOR FURNISHED/RETAINED TEMPORARY TRAFFIC BARRIER
6173602B		CONTRACTOR FURNISHED/COMMISSION RETAINED TEMPORARY TRAFFIC BARRIER
6174000A		TEMPORARY TRAFFIC BARRIER HEIGHT TRANSITION
6175010A		RELOCATING TEMPORARY TRAFFIC BARRIER
6176000B		COMMISSION FURNISHED/RETAINED TEMPORARY TRAFFIC BARRIER
6177000B		COMMISSION FURNISHED/RETAINED TEMPORARY TRAFFIC BARRIER HEIGHT TRANSITION
9019400		TEMPORARY LIGHTING
9029400		TEMPORARY TRAFFIC SIGNALS
9029401		TEMPORARY TRAFFIC SIGNALS AND LIGHTING

A24461 SUBTOTALS
SUMMARY SHEET
SHEET 12 OF 19

"THIS MEDIA SHOULD NOT BE CONSIDERED A CERTIFIED DOCUMENT."

DATE PREPARED 12/15/2013

ROUTE	STATE
VAR.	MO
DISTRICT	SHEET NO.
KC	3

COUNTY: JACKSON

JOB NO. J4P2191

CONTRACT ID.

PROJECT NO.

BRIDGE NO. A24461

DATE	DESCRIPTION

MISSOURI HIGHWAYS AND TRANSPORTATION COMMISSION

105 WEST CAPITOL
JEFFERSON CITY, MO 65102
1-888-ASK-MODOT (1-888-275-6636)

IF A SEAL IS PRESENT ON THIS SHEET IT HAS BEEN ELECTRONICALLY SEALED AND DATED.

EFFECTIVE: 08-01-2012

SIGN	SIZE (IN.)	AREA (SQ. FT.)	QTY	TOTAL AREA	QTY RELOC	TOTAL RELOC AREA	DESCRIPTION
WARNING SIGNS							
W01-1L	48X48	16.00					TURN (SYMBOL LEFT ARROW)
W01-1R	48X48	16.00					TURN (SYMBOL RIGHT ARROW)
W01-2L	48X48	16.00					CURVE (SYMBOL LEFT ARROW)
W01-2R	48X48	16.00					CURVE (SYMBOL RIGHT ARROW)
W01-3L	48X48	16.00					REVERSE TURN (SYMBOL LEFT ARROW)
W01-3R	48X48	16.00					REVERSE TURN (SYMBOL RIGHT ARROW)
W01-4L	48X48	16.00					REVERSE CURVE (SYMBOL LEFT ARROW)
W01-4R	48X48	16.00					REVERSE CURVE (SYMBOL RIGHT ARROW)
W01-4bL	48X48	16.00					DOUBLE ARROW REVERSE CURVE (SYMBOL LEFT ARROWS)
W01-4bR	48X48	16.00					DOUBLE ARROW REVERSE CURVE (SYMBOL RIGHT ARROWS)
W01-4cL	48X48	16.00					TRIPLE ARROW REVERSE CURVE (SYMBOL LEFT ARROWS)
W01-4cR	48X48	16.00					TRIPLE ARROW REVERSE CURVE (SYMBOL RIGHT ARROWS)
W01-6	60X30	12.50					HORIZONTAL ARROW (SYMBOL)
W01-6a	72X36	18.00					HORIZONTAL ARROW (SYMBOL ON PERMANENT BARRICADE)
W01-7	60X30	12.50					DOUBLE HEAD HORIZONTAL ARROW (SYMBOL)
W01-7a	72X36	18.00					DOUBLE HEAD HORIZONTAL ARROW (SYMBOL ON PERMANENT BARRICADE)
W01-8	18X24	3.00					CHEVRON (SYMBOL)
W01-8a	30X36	7.50					CHEVRON (SYMBOL FOR DIVIDED HIGHWAYS)
W03-1	48X48	16.00					STOP AHEAD (SYMBOL)
W03-2	48X48	16.00					YIELD AHEAD (SYMBOL)
W03-3	48X48	16.00					SIGNAL AHEAD (SYMBOL)
W03-4	48X48	16.00					BE PREPARED TO STOP
W03-5	48X48	16.00					SPEED LIMIT AHEAD
W04-1L	48X48	16.00					MERGE (SYMBOL FROM LEFT)
W04-1R	48X48	16.00					MERGE (SYMBOL FROM RIGHT)
W05-1	48X48	16.00					ROAD/BRIDGE/RAMP NARROWS
W05-3	48X48	16.00					ONE LANE BRIDGE
W05-5	48X48	16.00					NARROW LANES
W06-1	48X48	16.00					DIVIDED HIGHWAY (SYMBOL)
W06-2	48X48	16.00					DIVIDED HIGHWAY END (SYMBOL)
W06-3	48X48	16.00					TWO WAY TRAFFIC (SYMBOL)
W07-3a	30X24	5.00					NEXT XX MILES (PLAQUE)
W08-1	48X48	16.00					BUMP
W08-2	48X48	16.00					DIP
W08-3	48X48	16.00					PAVEMENT ENDS
W08-4	48X48	16.00					SOFT SHOULDER
W08-5	48X48	16.00					SLIPPERY WHEN WET (SYMBOL)
W08-6	48X48	16.00					TRUCK CROSSING WITH FLAGS
W08-6c	48X48	16.00					TRUCK ENTRANCE
W08-7	36X36	9.00					LOOSE GRAVEL
W08-9	48X48	16.00					LOW SHOULDER
W08-11	48X48	16.00					UNEVEN LANES
W08-12	48X48	16.00					NO CENTER LINE
W10-1	42 RND.	9.62					RAILROAD CROSSING
W012-1	24X24	4.00					DOUBLE DOWN ARROW (SYMBOL)
W012-2	48X48	16.00					LOW CLEARANCE (SYMBOL)
W012-2x	24X18	3.00					LOW CLEARANCE (PLAQUE)
W012-2a	84X24	14.00					OVERHEAD LOW CLEARANCE (FEET AND INCHES)
W08-15	48X48	16.00					GROOVED PAVEMENT
W08-15p	30X24	5.00					MOTORCYCLE (PLAQUE)
W08-17	48X48	16.00					SHOULDER DROP-OFF (SYMBOL)
W08-17p	30X24	5.00					SHOULDER DROP-OFF (PLAQUE)
SPECIAL	120X60	50.00					LOW CLEARANCE XX FT XX IN XX MILES AHEAD
SPECIAL	120X60	50.00					WIDTH RESTRICTION XX FT XX IN XX MILES AHEAD
W013-1	30X30	6.25					ADVISORY SPEED (PLAQUE)
W016-2	30X24	5.00					XXX FEET (PLAQUE)
W016-3	30X24	5.00					X MILE (PLAQUE)
W020-1	48X48	16.00	4	64			ROAD/BRIDGE/RAMP WORK AHEAD
W020-2	48X48	16.00					DETOUR AHEAD
W020-3	48X48	16.00					ROAD CLOSED AHEAD
W020-4	48X48	16.00					ONE LANE ROAD AHEAD
W020-5	48X48	16.00	4	64			RIGHT/CENTER/LEFT LANE CLOSED AHEAD
W020-5a	48X48	16.00					2 RIGHT/CENTER/LEFT LANES CLOSED AHEAD
W020-6a	48X48	16.00	4	64			RIGHT/CENTER/LEFT LANE CLOSED
W020-7a	48X48	16.00					FLAGGER (SYMBOL) WITH FLAGS
W021-2	36X36	9.00					FRESH OIL
W021-5b	48X48	16.00					SHOULDER WORK AHEAD
W022-1	48X48	16.00					BLASTING ZONE AHEAD
W022-2	42X36	10.50					TURN OFF 2-WAY RADIO AND PHONE
W022-3	42X36	10.50					END BLASTING ZONE
W022-6e	21X15	2.19					WET PAINT (ARROW PIVOTS)
GUIDE SIGNS							
SPECIAL	36X36	9.00					FRESH OIL/LOOSE GRAVEL
E05-1	36X48	12.00					GORE EXIT
E05-2	48X36	12.00					EXIT OPEN
E05-2a	48X36	12.00					EXIT CLOSED
G020-1	60X24	10.00					ROAD WORK NEXT XX MILES
G020-2	48X24	8.00					END ROAD WORK
G020-4	36X18	4.50					PILOT CAR FOLLOW ME
SPECIAL	42X30	8.75					PLEASE WAIT FOR PILOT CAR
G020-5aP	36X24	6.00	4	24			WORK ZONE (PLAQUE)
M04-8a	24X18	3.00					END DETOUR
M04-9L	48X36	12.00					DETOUR (LEFT ARROW)
M04-9R	48X36	12.00					DETOUR (RIGHT ARROW)
M04-10L	48X18	6.00					DETOUR (ARROW LEFT)
M04-10R	48X18	6.00					DETOUR (ARROW RIGHT)
M04-10R	XXXX	XXXX					
M04-10R	XXXX	XXXX					
REGULATORY SIGNS							
R1-1	48X48	13.25					STOP
R1-2	48 TRI.	6.93					YIELD
R1-2a	36X36	9.00					TO ONCOMING TRAFFIC (PLAQUE)
R1-3	20X9	1.25					X-WAY (PLAQUE)
R2-1	36X48	12.00	8	96			SPEED LIMIT XX
R3-1	48X48	16.00					NO RIGHT TURN (SYMBOL)
R3-2	48X48	16.00					NO LEFT TURN (SYMBOL)
R3-3	36X36	9.00					NO TURNS
R3-4	48X48	16.00					NO U-TURN (SYMBOL)
R3-7L	30X30	6.25					LEFT LANE MUST TURN LEFT
R3-7R	30X30	6.25					RIGHT LANE MUST TURN RIGHT
R4-1	36X48	12.00					DO NOT PASS
R4-2	36X48	12.00					PASS WITH CARE
R4-7aL	36X48	12.00					KEEP LEFT (HORIZONTAL ARROW)
R4-7a	36X48	12.00					KEEP RIGHT (HORIZONTAL ARROW)
R5-1	30X30	6.25					DO NOT ENTER
R5-1a	36X24	6.00					WRONG WAY
R6-1L	48X18	6.00					ONE WAY ARROW (LEFT)
R6-1R	48X18	6.00					ONE WAY ARROW (RIGHT)
R6-2L	24X30	5.00					ONE WAY (LEFT)
R6-2R	24X30	5.00					ONE WAY (RIGHT)
R10-6	24X36	6.00					STOP HERE ON RED (45° ARROW)
R11-2	48X30	10.00					ROAD CLOSED
R11-3a	60X30	12.50					ROAD CLOSED XX MILES AHEAD LOCAL TRAFFIC ONLY
R11-4	60X30	12.50					ROAD CLOSED TO THRU TRAFFIC
S4-4	36X15	3.75					WHEN FLASHING
CONST-3A	60X48	20.00					FINE SIGN
CONST-3X	56X12	4.67					SPEEDING/PASSING (PLATE)
MISCELLANEOUS SIGNS							
SPECIAL	36X48	12.00					POINT OF PRESENCE
SPECIAL	96X48	32.00					POINT OF PRESENCE
CONST-7-48	48X24	8.00					RATE OUR WORK ZONE
CONST-7-72	72X36	18.00					RATE OUR WORK ZONE
616-10.05 CONSTRUCTION SIGNS TOTAL							
616-10.10 RELOCATED SIGNS TOTAL							

NOTE: QUANTITIES ON THIS SHEET ARE NOT PAY ITEM VALUES AND ARE FOR REFERENCE ONLY

NOTE: SEE "PAY TOTAL" QUANTITY SHEET FOR PAY ITEM VALUES

ITEM NUMBER	TOTAL QTY	DESCRIPTION
6122008		IMPACT ATTENUATOR (8 SAND BARRELS)
6122009		IMPACT ATTENUATOR (9 SAND BARRELS)
6122010		IMPACT ATTENUATOR (10 SAND BARRELS)
6122012	2	IMPACT ATTENUATOR (12 SAND BARRELS)
6122014		IMPACT ATTENUATOR (14 SAND BARRELS)
6122017		IMPACT ATTENUATOR (17 SAND BARRELS)
6122019		IMPACT ATTENUATOR (19 SAND BARRELS)
6122020		REPLACEMENT SAND BARREL
6122030	2	IMPACT ATTENUATOR ARRAY (RELOCATION)
6123000A		TRUCK OR TRAILER MOUNTED ATTENUATOR (TMA)
6161007		SPEED LIMIT AND STROBE LIGHT ASSEMBLY
6161008		ADVANCED WARNING RAIL SYSTEM
6161009	16	FLAG ASSEMBLY
6161020		CHANNELIZER (DRUM-LIKE)
6161022		CHANNELIZER (CONES)
6161024	20	CHANNELIZER (TRIM LINE) WITH LIGHT
6161025	93	CHANNELIZER (TRIM LINE)
6161026		CHANNELIZER (VERTICAL PANEL)
6161027		CHANNELIZER (VERTICAL PANEL) WITH LIGHT
6161028		CHANNELIZER
6161030		TYPE III MOVEABLE BARRICADE
6161031		TYPE III MOVEABLE BARRICADE WITH LIGHT
6161033		DIRECTION INDICATOR BARRICADE
6161034		DIRECTION INDICATOR BARRICADE, WITH LIGHT
6161040	2	FLASHING ARROW PANEL
6161047		TYPE III OBJECT MARKER
6161051		WARNING LIGHT, TYPE A
6161052		WARNING LIGHT, TYPE B
6161053		WARNING LIGHT, TYPE C
6161055		SEQUENTIAL FLASHING WARNING LIGHT
6161070		TUBULAR MARKER
6161095		RADAR SPEED ADVISORY SYSTEM
6161096		CHANGEABLE MESSAGE SIGN, COMMISSION FURNISHED/RETAINED
6161098		CHANGEABLE MESSAGE SIGN, CONTRACTOR FURNISHED/RETAINED
6161100		CHANGEABLE MESSAGE SIGN, CONTRACTOR FURNISHED/COMMISSION RETAINED
6173600D		CONTRACTOR FURNISHED/RETAINED TEMPORARY TRAFFIC BARRIER
6173602B	2,375	CONTRACTOR FURNISHED/COMMISSION RETAINED TEMPORARY TRAFFIC BARRIER
6174000A		TEMPORARY TRAFFIC BARRIER HEIGHT TRANSITION
6175010A		RELOCATING TEMPORARY TRAFFIC BARRIER
6176000B	2,375	COMMISSION FURNISHED/RETAINED TEMPORARY TRAFFIC BARRIER
6177000B		COMMISSION FURNISHED/RETAINED TEMPORARY TRAFFIC BARRIER HEIGHT TRANSITION
9019400		TEMPORARY LIGHTING
9029400		TEMPORARY TRAFFIC SIGNALS
9029401		TEMPORARY TRAFFIC SIGNALS AND LIGHTING

A27331/A27452 SUBTOTALS
SUMMARY SHEET
SHEET 13 OF 19

"THIS MEDIA SHOULD NOT BE CONSIDERED A CERTIFIED DOCUMENT."

DATE PREPARED 12/15/2013

ROUTE	STATE
VAR.	MO
DISTRICT	SHEET NO.
KC	3

COUNTY: JACKSON

JOB NO.: J4P2191

CONTRACT ID.

PROJECT NO.

BRIDGE NO.: A27331/27452

DESCRIPTION	DATE

MISSOURI HIGHWAYS AND TRANSPORTATION COMMISSION

105 WEST CAPITOL
JEFFERSON CITY, MO 65102
1-888-ASK-MODOT (1-888-275-6636)

IF A SEAL IS PRESENT ON THIS SHEET IT HAS BEEN ELECTRONICALLY SEALED AND DATED.

EFFECTIVE: 08-01-2012

NOTE: QUANTITIES ON THIS SHEET ARE NOT PAY ITEM VALUES AND ARE FOR REFERENCE ONLY

NOTE: SEE "PAY TOTAL" QUANTITY SHEET FOR PAY ITEM VALUES

SIGN	SIZE (IN.)	AREA (SQ. FT.)	QTY	TOTAL AREA	QTY RELOC	TOTAL RELOC AREA	DESCRIPTION
WARNING SIGNS							
W01-1L	48X48	16.00					TURN (SYMBOL LEFT ARROW)
W01-1R	48X48	16.00					TURN (SYMBOL RIGHT ARROW)
W01-2L	48X48	16.00					CURVE (SYMBOL LEFT ARROW)
W01-2R	48X48	16.00					CURVE (SYMBOL RIGHT ARROW)
W01-3L	48X48	16.00					REVERSE TURN (SYMBOL LEFT ARROW)
W01-3R	48X48	16.00					REVERSE TURN (SYMBOL RIGHT ARROW)
W01-4L	48X48	16.00					REVERSE CURVE (SYMBOL LEFT ARROW)
W01-4R	48X48	16.00					REVERSE CURVE (SYMBOL RIGHT ARROW)
W01-4bL	48X48	16.00	4	64			DOUBLE ARROW REVERSE CURVE (SYMBOL LEFT ARROWS)
W01-4bR	48X48	16.00	4	64			DOUBLE ARROW REVERSE CURVE (SYMBOL RIGHT ARROWS)
W01-4cL	48X48	16.00					TRIPLE ARROW REVERSE CURVE (SYMBOL LEFT ARROWS)
W01-4cR	48X48	16.00					TRIPLE ARROW REVERSE CURVE (SYMBOL RIGHT ARROWS)
W01-6	60X30	12.50					HORIZONTAL ARROW (SYMBOL)
W01-6a	72X36	18.00					HORIZONTAL ARROW (SYMBOL ON PERMANENT BARRICADE)
W01-7	60X30	12.50					DOUBLE HEAD HORIZONTAL ARROW (SYMBOL)
W01-7a	72X36	18.00					DOUBLE HEAD HORIZONTAL ARROW (SYMBOL ON PERMANENT BARRICADE)
W01-8	18X24	3.00					CHEVRON (SYMBOL)
W01-8a	30X36	7.50					CHEVRON (SYMBOL FOR DIVIDED HIGHWAYS)
W03-1	48X48	16.00					STOP AHEAD (SYMBOL)
W03-2	48X48	16.00					YIELD AHEAD (SYMBOL)
W03-3	48X48	16.00					SIGNAL AHEAD (SYMBOL)
W03-4	48X48	16.00					BE PREPARED TO STOP
W03-5	48X48	16.00	4	64			SPEED LIMIT AHEAD
W04-1L	48X48	16.00					MERGE (SYMBOL FROM LEFT)
W04-1R	48X48	16.00	1	16			MERGE (SYMBOL FROM RIGHT)
W05-1	48X48	16.00					ROAD/BRIDGE/RAMP NARROWS
W05-3	48X48	16.00					ONE LANE BRIDGE
W05-5	48X48	16.00					NARROW LANES
W06-1	48X48	16.00					DIVIDED HIGHWAY (SYMBOL)
W06-2	48X48	16.00					DIVIDED HIGHWAY END (SYMBOL)
W06-3	48X48	16.00					TWO WAY TRAFFIC (SYMBOL)
W07-3a	30X24	5.00					NEXT XX MILES (PLAQUE)
W08-1	48X48	16.00					BUMP
W08-2	48X48	16.00					DIP
W08-3	48X48	16.00					PAVEMENT ENDS
W08-4	48X48	16.00					SOFT SHOULDER
W08-5	48X48	16.00					SLIPPERY WHEN WET (SYMBOL)
W08-6	48X48	16.00					TRUCK CROSSING WITH FLAGS
W08-6c	48X48	16.00					TRUCK ENTRANCE
W08-7	36X36	9.00					LOOSE GRAVEL
W08-9	48X48	16.00					LOW SHOULDER
W08-11	48X48	16.00					UNEVEN LANES
W08-12	48X48	16.00					NO CENTER LINE
W10-1	42 RND.	9.62					RAILROAD CROSSING
W012-1	24X24	4.00					DOUBLE DOWN ARROW (SYMBOL)
W012-2	48X48	16.00					LOW CLEARANCE (SYMBOL)
W012-2x	24X18	3.00					LOW CLEARANCE (PLAQUE)
W012-2a	84X24	14.00					OVERHEAD LOW CLEARANCE (FEET AND INCHES)
W08-15	48X48	16.00					GROOVED PAVEMENT
W08-15p	30X24	5.00					MOTORCYCLE (PLAQUE)
W08-17	48X48	16.00					SHOULDER DROP-OFF (SYMBOL)
W08-17p	30X24	5.00					SHOULDER DROP-OFF (PLAQUE)
SPECIAL	120X60	50.00					LOW CLEARANCE XX FT XX IN XX MILES AHEAD
SPECIAL	120X60	50.00					WIDTH RESTRICTION XX FT XX IN XX MILES AHEAD
W013-1	30X30	6.25					ADVISORY SPEED (PLAQUE)
W016-2	30X24	5.00					XXX FEET (PLAQUE)
W016-3	30X24	5.00					X MILE (PLAQUE)
W020-1	48X48	16.00	4	64			ROAD/BRIDGE/RAMP WORK AHEAD
W020-2	48X48	16.00					DETOUR AHEAD
W020-3	48X48	16.00					ROAD CLOSED AHEAD
W020-4	48X48	16.00					ONE LANE ROAD AHEAD
W020-5	48X48	16.00	4	64			RIGHT/CENTER/LEFT LANE CLOSED AHEAD
W020-5a	48X48	16.00					2 RIGHT/CENTER/LEFT LANES CLOSED AHEAD
W020-6a	48X48	16.00	4	64			RIGHT/CENTER/LEFT LANE CLOSED
W020-7a	48X48	16.00					FLAGGER (SYMBOL) WITH FLAGS
W021-2	36X36	9.00					FRESH OIL
W021-5b	48X48	16.00					SHOULDER WORK AHEAD
W022-1	48X48	16.00					BLASTING ZONE AHEAD
W022-2	42X36	10.50					TURN OFF 2-WAY RADIO AND PHONE
W022-3	42X36	10.50					END BLASTING ZONE
W022-6e	21X15	2.19					WET PAINT (ARROW PIVOTS)
GUIDE SIGNS							
SPECIAL	36X36	9.00					FRESH OIL/LOOSE GRAVEL
E05-1	36X48	12.00					GORE EXIT
E05-2	48X36	12.00					EXIT OPEN
E05-2a	48X36	12.00					EXIT CLOSED
G020-1	60X24	10.00					ROAD WORK NEXT XX MILES
G020-2	48X24	8.00	5	40			END ROAD WORK
G020-4	36X18	4.50					PILOT CAR FOLLOW ME
SPECIAL	42X30	8.75					PLEASE WAIT FOR PILOT CAR
G020-5aP	36X24	6.00	4	24			WORK ZONE (PLAQUE)
M04-8a	24X18	3.00					END DETOUR
M04-9L	48X36	12.00					DETOUR (LEFT ARROW)
M04-9R	48X36	12.00					DETOUR (RIGHT ARROW)
M04-10L	48X18	6.00					DETOUR (ARROW LEFT)
M04-10R	48X18	6.00					DETOUR (ARROW RIGHT)
M04-10R	XXXX	XXXX					
M04-10R	XXXX	XXXX					
REGULATORY SIGNS							
R1-1	48X48	13.25					STOP
R1-2	48 TRI.	6.93					YIELD
R1-2a	36X36	9.00					TO ONCOMING TRAFFIC (PLAQUE)
R1-3	20X9	1.25					X-WAY (PLAQUE)
R2-1	36X48	12.00	8	96			SPEED LIMIT XX
R3-1	48X48	16.00					NO RIGHT TURN (SYMBOL)
R3-2	48X48	16.00					NO LEFT TURN (SYMBOL)
R3-3	36X36	9.00					NO TURNS
R3-4	48X48	16.00					NO U-TURN (SYMBOL)
R3-7L	30X30	6.25					LEFT LANE MUST TURN LEFT
R3-7R	30X30	6.25					RIGHT LANE MUST TURN RIGHT
R4-1	36X48	12.00					DO NOT PASS
R4-2	36X48	12.00					PASS WITH CARE
R4-7aL	36X48	12.00					KEEP LEFT (HORIZONTAL ARROW)
R4-7a	36X48	12.00					KEEP RIGHT (HORIZONTAL ARROW)
R5-1	30X30	6.25					DO NOT ENTER
R5-1a	36X24	6.00					WRONG WAY
R6-1L	48X18	6.00					ONE WAY ARROW (LEFT)
R6-1R	48X18	6.00					ONE WAY ARROW (RIGHT)
R6-2L	24X30	5.00					ONE WAY (LEFT)
R6-2R	24X30	5.00					ONE WAY (RIGHT)
R10-6	24X36	6.00					STOP HERE ON RED (45° ARROW)
R11-2	48X30	10.00	7	70			ROAD CLOSED
R11-3a	60X30	12.50					ROAD CLOSED XX MILES AHEAD LOCAL TRAFFIC ONLY
R11-4	60X30	12.50					ROAD CLOSED TO THRU TRAFFIC
S4-4	36X15	3.75					WHEN FLASHING
CONST-3A	60X48	20.00					FINE SIGN
CONST-3X	56X12	4.67					SPEEDING/PASSING (PLATE)
MISCELLANEOUS SIGNS							
SPECIAL	36X48	12.00					POINT OF PRESENCE
SPECIAL	96X48	32.00					POINT OF PRESENCE
CONST-7-48	48X24	8.00					RATE OUR WORK ZONE
CONST-7-72	72X36	18.00					RATE OUR WORK ZONE
616-10.05 CONSTRUCTION SIGNS TOTAL							
616-10.10 RELOCATED SIGNS TOTAL							

ITEM NUMBER	TOTAL QTY	DESCRIPTION
6122008		IMPACT ATTENUATOR (8 SAND BARRELS)
6122009		IMPACT ATTENUATOR (9 SAND BARRELS)
6122010		IMPACT ATTENUATOR (10 SAND BARRELS)
6122012	2	IMPACT ATTENUATOR (12 SAND BARRELS)
6122014		IMPACT ATTENUATOR (14 SAND BARRELS)
6122017		IMPACT ATTENUATOR (17 SAND BARRELS)
6122019		IMPACT ATTENUATOR (19 SAND BARRELS)
6122020		REPLACEMENT SAND BARREL
6122030	2	IMPACT ATTENUATOR ARRAY (RELOCATION)
6123000A		TRUCK OR TRAILER MOUNTED ATTENUATOR (TMA)
6161007		SPEED LIMIT AND STROBE LIGHT ASSEMBLY
6161008		ADVANCED WARNING RAIL SYSTEM
6161009	24	FLAG ASSEMBLY
6161020		CHANNELIZER (DRUM-LIKE)
6161022		CHANNELIZER (CONES)
6161024	20	CHANNELIZER (TRIM LINE) WITH LIGHT
6161025	105	CHANNELIZER (TRIM LINE)
6161026		CHANNELIZER (VERTICAL PANEL)
6161027		CHANNELIZER (VERTICAL PANEL) WITH LIGHT
6161028		CHANNELIZER
6161030	21	TYPE III MOVEABLE BARRICADE
6161031		TYPE III MOVEABLE BARRICADE WITH LIGHT
6161033		DIRECTION INDICATOR BARRICADE
6161034		DIRECTION INDICATOR BARRICADE, WITH LIGHT
6161040	2	FLASHING ARROW PANEL
6161047		TYPE III OBJECT MARKER
6161051		WARNING LIGHT, TYPE A
6161052		WARNING LIGHT, TYPE B
6161053		WARNING LIGHT, TYPE C
6161055		SEQUENTIAL FLASHING WARNING LIGHT
6161070		TUBULAR MARKER
6161095		RADAR SPEED ADVISORY SYSTEM
6161096		CHANGEABLE MESSAGE SIGN, COMMISSION FURNISHED/RETAINED
6161098		CHANGEABLE MESSAGE SIGN, CONTRACTOR FURNISHED/RETAINED
6161100		CHANGEABLE MESSAGE SIGN, CONTRACTOR FURNISHED/COMMISSION RETAINED
6173600D	3775	CONTRACTOR FURNISHED/RETAINED TEMPORARY TRAFFIC BARRIER
6173602B		CONTRACTOR FURNISHED/COMMISSION RETAINED TEMPORARY TRAFFIC BARRIER
6174000A		TEMPORARY TRAFFIC BARRIER HEIGHT TRANSITION
6175010A	3775	RELOCATING TEMPORARY TRAFFIC BARRIER
6176000B		COMMISSION FURNISHED/RETAINED TEMPORARY TRAFFIC BARRIER
6177000B		COMMISSION FURNISHED/RETAINED TEMPORARY TRAFFIC BARRIER HEIGHT TRANSITION
9019400		TEMPORARY LIGHTING
9029400		TEMPORARY TRAFFIC SIGNALS
9029401		TEMPORARY TRAFFIC SIGNALS AND LIGHTING

A31361/A31362/A31391/A31401 SUBTOTALS
SUMMARY SHEET
SHEET 14 OF 19

"THIS MEDIA SHOULD NOT BE CONSIDERED A CERTIFIED DOCUMENT."

DATE PREPARED: 12/15/2013

ROUTE	STATE
VAR.	MO
DISTRICT	SHEET NO.
KC	3

COUNTY: JACKSON

JOB NO.: J4P2191

CONTRACT ID.

PROJECT NO.

BRIDGE NO.: A31361/A31362 A31391/A31401

DATE	DESCRIPTION

MISSOURI HIGHWAYS AND TRANSPORTATION COMMISSION

105 WEST CAPITOL
JEFFERSON CITY, MO 65102
1-888-ASK-MODOT (1-888-275-6636)

IF A SEAL IS PRESENT ON THIS SHEET IT HAS BEEN ELECTRONICALLY SEALED AND DATED.

EFFECTIVE: 08-01-2012

SIGN	SIZE (IN.)	AREA (SQ. FT.)	QTY	TOTAL AREA	QTY RELOC	TOTAL RELOC AREA	DESCRIPTION
WARNING SIGNS							
W01-1L	48X48	16.00					TURN (SYMBOL LEFT ARROW)
W01-1R	48X48	16.00					TURN (SYMBOL RIGHT ARROW)
W01-2L	48X48	16.00					CURVE (SYMBOL LEFT ARROW)
W01-2R	48X48	16.00					CURVE (SYMBOL RIGHT ARROW)
W01-3L	48X48	16.00					REVERSE TURN (SYMBOL LEFT ARROW)
W01-3R	48X48	16.00					REVERSE TURN (SYMBOL RIGHT ARROW)
W01-4L	48X48	16.00					REVERSE CURVE (SYMBOL LEFT ARROW)
W01-4R	48X48	16.00					REVERSE CURVE (SYMBOL RIGHT ARROW)
W01-4bL	48X48	16.00					DOUBLE ARROW REVERSE CURVE (SYMBOL LEFT ARROWS)
W01-4bR	48X48	16.00					DOUBLE ARROW REVERSE CURVE (SYMBOL RIGHT ARROWS)
W01-4cL	48X48	16.00					TRIPLE ARROW REVERSE CURVE (SYMBOL LEFT ARROWS)
W01-4cR	48X48	16.00					TRIPLE ARROW REVERSE CURVE (SYMBOL RIGHT ARROWS)
W01-6	60X30	12.50					HORIZONTAL ARROW (SYMBOL)
W01-6a	72X36	18.00					HORIZONTAL ARROW (SYMBOL ON PERMANENT BARRICADE)
W01-7	60X30	12.50					DOUBLE HEAD HORIZONTAL ARROW (SYMBOL)
W01-7a	72X36	18.00					DOUBLE HEAD HORIZONTAL ARROW (SYMBOL ON PERMANENT BARRICADE)
W01-8	18X24	3.00					CHEVRON (SYMBOL)
W01-8a	30X36	7.50					CHEVRON (SYMBOL FOR DIVIDED HIGHWAYS)
W03-1	48X48	16.00					STOP AHEAD (SYMBOL)
W03-2	48X48	16.00					YIELD AHEAD (SYMBOL)
W03-3	48X48	16.00					SIGNAL AHEAD (SYMBOL)
W03-4	48X48	16.00					BE PREPARED TO STOP
W03-5	48X48	16.00					SPEED LIMIT AHEAD
W04-1L	48X48	16.00					MERGE (SYMBOL FROM LEFT)
W04-1R	48X48	16.00					MERGE (SYMBOL FROM RIGHT)
W05-1	48X48	16.00					ROAD/BRIDGE/RAMP NARROWS
W05-3	48X48	16.00					ONE LANE BRIDGE
W05-5	48X48	16.00					NARROW LANES
W06-1	48X48	16.00					DIVIDED HIGHWAY (SYMBOL)
W06-2	48X48	16.00					DIVIDED HIGHWAY END (SYMBOL)
W06-3	48X48	16.00					TWO WAY TRAFFIC (SYMBOL)
W07-3a	30X24	5.00					NEXT XX MILES (PLAQUE)
W08-1	48X48	16.00					BUMP
W08-2	48X48	16.00					DIP
W08-3	48X48	16.00					PAVEMENT ENDS
W08-4	48X48	16.00					SOFT SHOULDER
W08-5	48X48	16.00					SLIPPERY WHEN WET (SYMBOL)
W08-6	48X48	16.00					TRUCK CROSSING WITH FLAGS
W08-6c	48X48	16.00					TRUCK ENTRANCE
W08-7	36X36	9.00					LOOSE GRAVEL
W08-9	48X48	16.00					LOW SHOULDER
W08-11	48X48	16.00					UNEVEN LANES
W08-12	48X48	16.00					NO CENTER LINE
W10-1	42 RND.	9.62					RAILROAD CROSSING
W012-1	24X24	4.00					DOUBLE DOWN ARROW (SYMBOL)
W012-2	48X48	16.00					LOW CLEARANCE (SYMBOL)
W012-2x	24X18	3.00					LOW CLEARANCE (PLAQUE)
W012-2a	84X24	14.00					OVERHEAD LOW CLEARANCE (FEET AND INCHES)
W08-15	48X48	16.00					GROOVED PAVEMENT
W08-15p	30X24	5.00					MOTORCYCLE (PLAQUE)
W08-17	48X48	16.00					SHOULDER DROP-OFF (SYMBOL)
W08-17p	30X24	5.00					SHOULDER DROP-OFF (PLAQUE)
SPECIAL	120X60	50.00					LOW CLEARANCE XX FT XX IN XX MILES AHEAD
SPECIAL	120X60	50.00					WIDTH RESTRICTION XX FT XX IN XX MILES AHEAD
W013-1	30X30	6.25					ADVISORY SPEED (PLAQUE)
W016-2	30X24	5.00					XXX FEET (PLAQUE)
W016-3	30X24	5.00					X MILE (PLAQUE)
W020-1	48X48	16.00					ROAD/BRIDGE/RAMP WORK AHEAD
W020-2	48X48	16.00					DETOUR AHEAD
W020-3	48X48	16.00	8	120			ROAD CLOSED AHEAD
W020-4	48X48	16.00					ONE LANE ROAD AHEAD
W020-5	48X48	16.00					RIGHT/CENTER/LEFT LANE CLOSED AHEAD
W020-5a	48X48	16.00					2 RIGHT/CENTER/LEFT LANES CLOSED AHEAD
W020-6a	48X48	16.00					RIGHT/CENTER/LEFT LANE CLOSED
W020-7a	48X48	16.00					FLAGGER (SYMBOL) WITH FLAGS
W021-2	36X36	9.00					FRESH OIL
W021-5b	48X48	16.00					SHOULDER WORK AHEAD
W022-1	48X48	16.00					BLASTING ZONE AHEAD
W022-2	42X36	10.50					TURN OFF 2-WAY RADIO AND PHONE
W022-3	42X36	10.50					END BLASTING ZONE
W022-6e	21X15	2.19					WET PAINT (ARROW PIVOTS)
GUIDE SIGNS							
SPECIAL	36X36	9.00					FRESH OIL/LOOSE GRAVEL
E05-1	36X48	12.00					GORE EXIT
E05-2	48X36	12.00					EXIT OPEN
E05-2a	48X36	12.00					EXIT CLOSED
G020-1	60X24	10.00					ROAD WORK NEXT XX MILES
G020-2	48X24	8.00					END ROAD WORK
G020-4	36X18	4.50					PILOT CAR FOLLOW ME
SPECIAL	42X30	8.75					PLEASE WAIT FOR PILOT CAR
G020-5aP	36X24	6.00					WORK ZONE (PLAQUE)
M04-8a	24X18	3.00	2	6			END DETOUR
M04-9L	48X36	12.00					DETOUR (LEFT ARROW)
M04-9R	48X36	12.00					DETOUR (RIGHT ARROW)
M04-10L	48X18	6.00					DETOUR (ARROW LEFT)
M04-10R	48X18	6.00					DETOUR (ARROW RIGHT)
M04-10R	XXXX	XXXX					
M04-10R	XXXX	XXXX					
REGULATORY SIGNS							
R1-1	48X48	13.25					STOP
R1-2	48 TRI.	6.93					YIELD
R1-2a	36X36	9.00					TO ONCOMING TRAFFIC (PLAQUE)
R1-3	20X9	1.25					X-WAY (PLAQUE)
R2-1	36X48	12.00					SPEED LIMIT XX
R3-1	48X48	16.00					NO RIGHT TURN (SYMBOL)
R3-2	48X48	16.00					NO LEFT TURN (SYMBOL)
R3-3	36X36	9.00					NO TURNS
R3-4	48X48	16.00					NO U-TURN (SYMBOL)
R3-7L	30X30	6.25					LEFT LANE MUST TURN LEFT
R3-7R	30X30	6.25					RIGHT LANE MUST TURN RIGHT
R4-1	36X48	12.00					DO NOT PASS
R4-2	36X48	12.00					PASS WITH CARE
R4-7aL	36X48	12.00					KEEP LEFT (HORIZONTAL ARROW)
R4-7a	36X48	12.00					KEEP RIGHT (HORIZONTAL ARROW)
R5-1	30X30	6.25					DO NOT ENTER
R5-1a	36X24	6.00					WRONG WAY
R6-1L	48X18	6.00					ONE WAY ARROW (LEFT)
R6-1R	48X18	6.00					ONE WAY ARROW (RIGHT)
R6-2L	24X30	5.00					ONE WAY (LEFT)
R6-2R	24X30	5.00					ONE WAY (RIGHT)
R10-6	24X36	6.00					STOP HERE ON RED (45° ARROW)
R11-2	48X30	10.00	4	40			ROAD CLOSED
R11-3a	60X30	12.50					ROAD CLOSED XX MILES AHEAD LOCAL TRAFFIC ONLY
R11-4	60X30	12.50					ROAD CLOSED TO THRU TRAFFIC
S4-4	36X15	3.75					WHEN FLASHING
CONST-3A	60X48	20.00					FINE SIGN
CONST-3X	56X12	4.67					SPEEDING/PASSING (PLATE)
R9-9	24X12	2.00	2	4			SIDEWALK CLOSED
MISCELLANEOUS SIGNS							
SPECIAL	48X48	16.00	10	160			SPECIAL SIGN
SPECIAL	96X48	32.00					POINT OF PRESENCE
CONST-7-48	48X24	8.00					RATE OUR WORK ZONE
CONST-7-72	72X36	18.00					RATE OUR WORK ZONE
616-10.05 CONSTRUCTION SIGNS TOTAL							
616-10.10 RELOCATED SIGNS TOTAL							

NOTE: QUANTITIES ON THIS SHEET ARE NOT PAY ITEM VALUES AND ARE FOR REFERENCE ONLY

NOTE: SEE "PAY TOTAL" QUANTITY SHEET FOR PAY ITEM VALUES

ITEM NUMBER	TOTAL QTY	DESCRIPTION
6122008		IMPACT ATTENUATOR (8 SAND BARRELS)
6122009		IMPACT ATTENUATOR (9 SAND BARRELS)
6122010		IMPACT ATTENUATOR (10 SAND BARRELS)
6122012		IMPACT ATTENUATOR (12 SAND BARRELS)
6122014		IMPACT ATTENUATOR (14 SAND BARRELS)
6122017		IMPACT ATTENUATOR (17 SAND BARRELS)
6122019		IMPACT ATTENUATOR (19 SAND BARRELS)
6122020		REPLACEMENT SAND BARREL
6122030		IMPACT ATTENUATOR ARRAY (RELOCATION)
6123000A		TRUCK OR TRAILER MOUNTED ATTENUATOR (TMA)
6161007		SPEED LIMIT AND STROBE LIGHT ASSEMBLY
6161008		ADVANCED WARNING RAIL SYSTEM
6161009	4	FLAG ASSEMBLY
6161020		CHANNELIZER (DRUM-LIKE)
6161022		CHANNELIZER (CONES)
6161024		CHANNELIZER (TRIM LINE) WITH LIGHT
6161025		CHANNELIZER (TRIM LINE)
6161026		CHANNELIZER (VERTICAL PANEL)
6161027		CHANNELIZER (VERTICAL PANEL) WITH LIGHT
6161028		CHANNELIZER
6161030	14	TYPE III MOVEABLE BARRICADE
6161031		TYPE III MOVEABLE BARRICADE WITH LIGHT
6161033		DIRECTION INDICATOR BARRICADE
6161034		DIRECTION INDICATOR BARRICADE, WITH LIGHT
6161040		FLASHING ARROW PANEL
6161047		TYPE III OBJECT MARKER
6161051		WARNING LIGHT, TYPE A
6161052		WARNING LIGHT, TYPE B
6161053		WARNING LIGHT, TYPE C
6161055		SEQUENTIAL FLASHING WARNING LIGHT
6161070		TUBULAR MARKER
6161095		RADAR SPEED ADVISORY SYSTEM
6161096		CHANGEABLE MESSAGE SIGN, COMMISSION FURNISHED/RETAINED
6161098		CHANGEABLE MESSAGE SIGN, CONTRACTOR FURNISHED/RETAINED
6161100		CHANGEABLE MESSAGE SIGN, CONTRACTOR FURNISHED/COMMISSION RETAINED
6173600D		CONTRACTOR FURNISHED/RETAINED TEMPORARY TRAFFIC BARRIER
6173602B		CONTRACTOR FURNISHED/COMMISSION RETAINED TEMPORARY TRAFFIC BARRIER
6174000A		TEMPORARY TRAFFIC BARRIER HEIGHT TRANSITION
6175010A		RELOCATING TEMPORARY TRAFFIC BARRIER
6176000B		COMMISSION FURNISHED/RETAINED TEMPORARY TRAFFIC BARRIER
6177000B		COMMISSION FURNISHED/RETAINED TEMPORARY TRAFFIC BARRIER HEIGHT TRANSITION
9019400		TEMPORARY LIGHTING
9029400		TEMPORARY TRAFFIC SIGNALS
9029401		TEMPORARY TRAFFIC SIGNALS AND LIGHTING

A31412 SUBTOTALS
SUMMARY SHEET
SHEET 15 OF 19

"THIS MEDIA SHOULD NOT BE CONSIDERED A CERTIFIED DOCUMENT."

DATE PREPARED 12/15/2013

ROUTE	STATE
VAR.	MO
DISTRICT	SHEET NO.
KC	3

COUNTY: JACKSON

JOB NO. J4P2191

CONTRACT ID.

PROJECT NO.

BRIDGE NO. A31412

DESCRIPTION	DATE

IF A SEAL IS PRESENT ON THIS SHEET IT HAS BEEN ELECTRONICALLY SEALED AND DATED.

MISSOURI HIGHWAYS AND TRANSPORTATION COMMISSION
105 WEST CAPITOL
JEFFERSON CITY, MO 65102
1-888-ASK-MODOT (1-888-275-6636)

EFFECTIVE: 08-01-2012

SIGN	SIZE (IN.)	AREA (SQ. FT.)	QTY	TOTAL AREA	QTY RELOC	TOTAL RELOC AREA	DESCRIPTION
WARNING SIGNS							
W01-1L	48X48	16.00					TURN (SYMBOL LEFT ARROW)
W01-1R	48X48	16.00					TURN (SYMBOL RIGHT ARROW)
W01-2L	48X48	16.00					CURVE (SYMBOL LEFT ARROW)
W01-2R	48X48	16.00					CURVE (SYMBOL RIGHT ARROW)
W01-3L	48X48	16.00					REVERSE TURN (SYMBOL LEFT ARROW)
W01-3R	48X48	16.00					REVERSE TURN (SYMBOL RIGHT ARROW)
W01-4L	48X48	16.00	4	64			REVERSE CURVE (SYMBOL LEFT ARROW)
W01-4R	48X48	16.00	4	64			REVERSE CURVE (SYMBOL RIGHT ARROW)
W01-4bL	48X48	16.00					DOUBLE ARROW REVERSE CURVE (SYMBOL LEFT ARROWS)
W01-4bR	48X48	16.00					DOUBLE ARROW REVERSE CURVE (SYMBOL RIGHT ARROWS)
W01-4cL	48X48	16.00					TRIPLE ARROW REVERSE CURVE (SYMBOL LEFT ARROWS)
W01-4cR	48X48	16.00					TRIPLE ARROW REVERSE CURVE (SYMBOL RIGHT ARROWS)
W01-6	60X30	12.50					HORIZONTAL ARROW (SYMBOL)
W01-6a	72X36	18.00					HORIZONTAL ARROW (SYMBOL ON PERMANENT BARRICADE)
W01-7	60X30	12.50					DOUBLE HEAD HORIZONTAL ARROW (SYMBOL)
W01-7a	72X36	18.00					DOUBLE HEAD HORIZONTAL ARROW (SYMBOL ON PERMANENT BARRICADE)
W01-8	18X24	3.00					CHEVRON (SYMBOL)
W01-8a	30X36	7.50					CHEVRON (SYMBOL FOR DIVIDED HIGHWAYS)
W03-1	48X48	16.00					STOP AHEAD (SYMBOL)
W03-2	48X48	16.00					YIELD AHEAD (SYMBOL)
W03-3	48X48	16.00					SIGNAL AHEAD (SYMBOL)
W03-4	48X48	16.00					BE PREPARED TO STOP
W03-5	48X48	16.00	2	32			SPEED LIMIT AHEAD
W04-1L	48X48	16.00					MERGE (SYMBOL FROM LEFT)
W04-1R	48X48	16.00					MERGE (SYMBOL FROM RIGHT)
W05-1	48X48	16.00					ROAD/BRIDGE/RAMP NARROWS
W05-3	48X48	16.00					ONE LANE BRIDGE
W05-5	48X48	16.00					NARROW LANES
W06-1	48X48	16.00					DIVIDED HIGHWAY (SYMBOL)
W06-2	48X48	16.00					DIVIDED HIGHWAY END (SYMBOL)
W06-3	48X48	16.00					TWO WAY TRAFFIC (SYMBOL)
W07-3a	30X24	5.00					NEXT XX MILES (PLAQUE)
W08-1	48X48	16.00					BUMP
W08-2	48X48	16.00					DIP
W08-3	48X48	16.00					PAVEMENT ENDS
W08-4	48X48	16.00					SOFT SHOULDER
W08-5	48X48	16.00					SLIPPERY WHEN WET (SYMBOL)
W08-6	48X48	16.00					TRUCK CROSSING WITH FLAGS
W08-6c	48X48	16.00					TRUCK ENTRANCE
W08-7	36X36	9.00					LOOSE GRAVEL
W08-9	48X48	16.00					LOW SHOULDER
W08-11	48X48	16.00					UNEVEN LANES
W08-12	48X48	16.00					NO CENTER LINE
W10-1	42 RND.	9.62					RAILROAD CROSSING
W012-1	24X24	4.00					DOUBLE DOWN ARROW (SYMBOL)
W012-2	48X48	16.00					LOW CLEARANCE (SYMBOL)
W012-2x	24X18	3.00					LOW CLEARANCE (PLAQUE)
W012-2a	84X24	14.00					OVERHEAD LOW CLEARANCE (FEET AND INCHES)
W08-15	48X48	16.00					GROOVED PAVEMENT
W08-15p	30X24	5.00					MOTORCYCLE (PLAQUE)
W08-17	48X48	16.00					SHOULDER DROP-OFF (SYMBOL)
W08-17p	30X24	5.00					SHOULDER DROP-OFF (PLAQUE)
SPECIAL	120X60	50.00					LOW CLEARANCE XX FT XX IN XX MILES AHEAD
SPECIAL	120X60	50.00					WIDTH RESTRICTION XX FT XX IN XX MILES AHEAD
W013-1	30X30	6.25					ADVISORY SPEED (PLAQUE)
W016-2	30X24	5.00					XXX FEET (PLAQUE)
W016-3	30X24	5.00					X MILE (PLAQUE)
W020-1	48X48	16.00	4	64			ROAD/BRIDGE/RAMP WORK AHEAD
W020-2	48X48	16.00					DETOUR AHEAD
W020-3	48X48	16.00					ROAD CLOSED AHEAD
W020-4	48X48	16.00					ONE LANE ROAD AHEAD
W020-5	48X48	16.00	2	32			RIGHT/CENTER/LEFT LANE CLOSED AHEAD
W020-5a	48X48	16.00					2 RIGHT/CENTER/LEFT LANES CLOSED AHEAD
W020-6a	48X48	16.00	2	32			RIGHT/CENTER/LEFT LANE CLOSED
W020-7a	48X48	16.00					FLAGGER (SYMBOL) WITH FLAGS
W021-2	36X36	9.00					FRESH OIL
W021-5b	48X48	16.00					SHOULDER WORK AHEAD
W022-1	48X48	16.00					BLASTING ZONE AHEAD
W022-2	42X36	10.50					TURN OFF 2-WAY RADIO AND PHONE
W022-3	42X36	10.50					END BLASTING ZONE
W022-6e	21X15	2.19					WET PAINT (ARROW PIVOTS)
GUIDE SIGNS							
SPECIAL	36X36	9.00					FRESH OIL/LOOSE GRAVEL
E05-1	36X48	12.00					GORE EXIT
E05-2	48X36	12.00					EXIT OPEN
E05-2a	48X36	12.00					EXIT CLOSED
G020-1	60X24	10.00					ROAD WORK NEXT XX MILES
G020-2	48X24	8.00	4	32			END ROAD WORK
G020-4	36X18	4.50					PILOT CAR FOLLOW ME
SPECIAL	42X30	8.75					PLEASE WAIT FOR PILOT CAR
G020-5aP	36X24	6.00	2	12			WORK ZONE (PLAQUE)
M04-8a	24X18	3.00					END DETOUR
M04-9L	48X36	12.00					DETOUR (LEFT ARROW)
M04-9R	48X36	12.00					DETOUR (RIGHT ARROW)
M04-10L	48X18	6.00					DETOUR (ARROW LEFT)
M04-10R	48X18	6.00					DETOUR (ARROW RIGHT)
M04-10R	XXXX	XXXX					
M04-10R	XXXX	XXXX					
REGULATORY SIGNS							
R1-1	48X48	13.25					STOP
R1-2	48 TRI.	6.93					YIELD
R1-2a	36X36	9.00					TO ONCOMING TRAFFIC (PLAQUE)
R1-3	20X9	1.25					X-WAY (PLAQUE)
R2-1	36X48	12.00	4	48			SPEED LIMIT XX
R3-1	48X48	16.00					NO RIGHT TURN (SYMBOL)
R3-2	48X48	16.00					NO LEFT TURN (SYMBOL)
R3-3	36X36	9.00					NO TURNS
R3-4	48X48	16.00					NO U-TURN (SYMBOL)
R3-7L	30X30	6.25	2	13			LEFT LANE MUST TURN LEFT
R3-7R	30X30	6.25					RIGHT LANE MUST TURN RIGHT
R4-1	36X48	12.00					DO NOT PASS
R4-2	36X48	12.00					PASS WITH CARE
R4-7aL	36X48	12.00					KEEP LEFT (HORIZONTAL ARROW)
R4-7a	36X48	12.00					KEEP RIGHT (HORIZONTAL ARROW)
R5-1	30X30	6.25					DO NOT ENTER
R5-1a	36X24	6.00					WRONG WAY
R6-1L	48X18	6.00					ONE WAY ARROW (LEFT)
R6-1R	48X18	6.00					ONE WAY ARROW (RIGHT)
R6-2L	24X30	5.00					ONE WAY (LEFT)
R6-2R	24X30	5.00					ONE WAY (RIGHT)
R10-6	24X36	6.00					STOP HERE ON RED (45° ARROW)
R11-2	48X30	10.00					ROAD CLOSED
R11-3a	60X30	12.50					ROAD CLOSED XX MILES AHEAD LOCAL TRAFFIC ONLY
R11-4	60X30	12.50					ROAD CLOSED TO THRU TRAFFIC
S4-4	36X15	3.75					WHEN FLASHING
CONST-3A	60X48	20.00					FINE SIGN
CONST-3X	56X12	4.67					SPEEDING/PASSING (PLATE)
MISCELLANEOUS SIGNS							
SPECIAL	36X48	12.00					POINT OF PRESENCE
SPECIAL	96X48	32.00					POINT OF PRESENCE
CONST-7-48	48X24	8.00					RATE OUR WORK ZONE
CONST-7-72	72X36	18.00					RATE OUR WORK ZONE
616-10.05 CONSTRUCTION SIGNS TOTAL							
616-10.10 RELOCATED SIGNS TOTAL							

NOTE: QUANTITIES ON THIS SHEET ARE NOT PAY ITEM VALUES AND ARE FOR REFERENCE ONLY

NOTE: SEE "PAY TOTAL" QUANTITY SHEET FOR PAY ITEM VALUES

ITEM NUMBER	TOTAL QTY	DESCRIPTION
6122008	2	IMPACT ATTENUATOR (8 SAND BARRELS)
6122009		IMPACT ATTENUATOR (9 SAND BARRELS)
6122010		IMPACT ATTENUATOR (10 SAND BARRELS)
6122012		IMPACT ATTENUATOR (12 SAND BARRELS)
6122014		IMPACT ATTENUATOR (14 SAND BARRELS)
6122017		IMPACT ATTENUATOR (17 SAND BARRELS)
6122019		IMPACT ATTENUATOR (19 SAND BARRELS)
6122020		REPLACEMENT SAND BARREL
6122030	2	IMPACT ATTENUATOR ARRAY (RELOCATION)
6123000A		TRUCK OR TRAILER MOUNTED ATTENUATOR (TMA)
6161007		SPEED LIMIT AND STROBE LIGHT ASSEMBLY
6161008		ADVANCED WARNING RAIL SYSTEM
6161009	12	FLAG ASSEMBLY
6161020		CHANNELIZER (DRUM-LIKE)
6161022		CHANNELIZER (CONES)
6161024	10	CHANNELIZER (TRIM LINE) WITH LIGHT
6161025	41	CHANNELIZER (TRIM LINE)
6161026		CHANNELIZER (VERTICAL PANEL)
6161027		CHANNELIZER (VERTICAL PANEL) WITH LIGHT
6161028		CHANNELIZER
6161030		TYPE III MOVEABLE BARRICADE
6161031		TYPE III MOVEABLE BARRICADE WITH LIGHT
6161033		DIRECTION INDICATOR BARRICADE
6161034		DIRECTION INDICATOR BARRICADE, WITH LIGHT
6161040	2	FLASHING ARROW PANEL
6161047		TYPE III OBJECT MARKER
6161051		WARNING LIGHT, TYPE A
6161052		WARNING LIGHT, TYPE B
6161053		WARNING LIGHT, TYPE C
6161055		SEQUENTIAL FLASHING WARNING LIGHT
6161070		TUBULAR MARKER
6161095		RADAR SPEED ADVISORY SYSTEM
6161096		CHANGEABLE MESSAGE SIGN, COMMISSION FURNISHED/RETAINED
6161098	4	CHANGEABLE MESSAGE SIGN, CONTRACTOR FURNISHED/RETAINED
6161100		CHANGEABLE MESSAGE SIGN, CONTRACTOR FURNISHED/COMMISSION RETAINED
6173600D	862.5	CONTRACTOR FURNISHED/RETAINED TEMPORARY TRAFFIC BARRIER
6173602B		CONTRACTOR FURNISHED/COMMISSION RETAINED TEMPORARY TRAFFIC BARRIER
6174000A		TEMPORARY TRAFFIC BARRIER HEIGHT TRANSITION
6175010A	862.5	RELOCATING TEMPORARY TRAFFIC BARRIER
6176000B		COMMISSION FURNISHED/RETAINED TEMPORARY TRAFFIC BARRIER
6177000B		COMMISSION FURNISHED/RETAINED TEMPORARY TRAFFIC BARRIER HEIGHT TRANSITION
9019400		TEMPORARY LIGHTING
9029400		TEMPORARY TRAFFIC SIGNALS
9029401		TEMPORARY TRAFFIC SIGNALS AND LIGHTING

A37631 SUBTOTALS
SUMMARY SHEET
SHEET 16 OF 19

"THIS MEDIA SHOULD NOT BE CONSIDERED A CERTIFIED DOCUMENT."

DATE PREPARED 12/15/2013

ROUTE	STATE
VAR.	MO
DISTRICT	SHEET NO.
KC	3

COUNTY: JACKSON

JOB NO.: J4P2191

CONTRACT ID.

PROJECT NO.

BRIDGE NO.: A37631

DESCRIPTION	DATE

MISSOURI HIGHWAYS AND TRANSPORTATION COMMISSION

105 WEST CAPITOL
JEFFERSON CITY, MO 65102
1-888-ASK-MODOT (1-888-275-6636)

IF A SEAL IS PRESENT ON THIS SHEET IT HAS BEEN ELECTRONICALLY SEALED AND DATED.

EFFECTIVE: 08-01-2012

SIGN	SIZE (IN.)	AREA (SQ. FT.)	QTY	TOTAL AREA	QTY RELOC	TOTAL RELOC AREA	DESCRIPTION
WARNING SIGNS							
W01-1L	48X48	16.00					TURN (SYMBOL LEFT ARROW)
W01-1R	48X48	16.00					TURN (SYMBOL RIGHT ARROW)
W01-2L	48X48	16.00					CURVE (SYMBOL LEFT ARROW)
W01-2R	48X48	16.00					CURVE (SYMBOL RIGHT ARROW)
W01-3L	48X48	16.00					REVERSE TURN (SYMBOL LEFT ARROW)
W01-3R	48X48	16.00					REVERSE TURN (SYMBOL RIGHT ARROW)
W01-4L	48X48	16.00					REVERSE CURVE (SYMBOL LEFT ARROW)
W01-4R	48X48	16.00	1	16			REVERSE CURVE (SYMBOL RIGHT ARROW)
W01-4bL	48X48	16.00					DOUBLE ARROW REVERSE CURVE (SYMBOL LEFT ARROWS)
W01-4bR	48X48	16.00					DOUBLE ARROW REVERSE CURVE (SYMBOL RIGHT ARROWS)
W01-4cL	48X48	16.00					TRIPLE ARROW REVERSE CURVE (SYMBOL LEFT ARROWS)
W01-4cR	48X48	16.00					TRIPLE ARROW REVERSE CURVE (SYMBOL RIGHT ARROWS)
W01-6	60X30	12.50					HORIZONTAL ARROW (SYMBOL)
W01-6a	72X36	18.00					HORIZONTAL ARROW (SYMBOL ON PERMANENT BARRICADE)
W01-7	60X30	12.50					DOUBLE HEAD HORIZONTAL ARROW (SYMBOL)
W01-7a	72X36	18.00					DOUBLE HEAD HORIZONTAL ARROW (SYMBOL ON PERMANENT BARRICADE)
W01-8	18X24	3.00					CHEVRON (SYMBOL)
W01-8a	30X36	7.50					CHEVRON (SYMBOL FOR DIVIDED HIGHWAYS)
W03-1	48X48	16.00					STOP AHEAD (SYMBOL)
W03-2	48X48	16.00					YIELD AHEAD (SYMBOL)
W03-3	48X48	16.00	2	32			SIGNAL AHEAD (SYMBOL)
W03-4	48X48	16.00					BE PREPARED TO STOP
W03-5	48X48	16.00	2	32			SPEED LIMIT AHEAD
W04-1L	48X48	16.00					MERGE (SYMBOL FROM LEFT)
W04-1R	48X48	16.00					MERGE (SYMBOL FROM RIGHT)
W05-1	48X48	16.00					ROAD/BRIDGE/RAMP NARROWS
W05-3	48X48	16.00					ONE LANE BRIDGE
W05-5	48X48	16.00					NARROW LANES
W06-1	48X48	16.00					DIVIDED HIGHWAY (SYMBOL)
W06-2	48X48	16.00					DIVIDED HIGHWAY END (SYMBOL)
W06-3	48X48	16.00					TWO WAY TRAFFIC (SYMBOL)
W07-3a	30X24	5.00					NEXT XX MILES (PLAQUE)
W08-1	48X48	16.00					BUMP
W08-2	48X48	16.00					DIP
W08-3	48X48	16.00					PAVEMENT ENDS
W08-4	48X48	16.00					SOFT SHOULDER
W08-5	48X48	16.00					SLIPPERY WHEN WET (SYMBOL)
W08-6	48X48	16.00					TRUCK CROSSING WITH FLAGS
W08-6c	48X48	16.00					TRUCK ENTRANCE
W08-7	36X36	9.00					LOOSE GRAVEL
W08-9	48X48	16.00					LOW SHOULDER
W08-11	48X48	16.00					UNEVEN LANES
W08-12	48X48	16.00					NO CENTER LINE
W10-1	42 RND.	9.62					RAILROAD CROSSING
W012-1	24X24	4.00					DOUBLE DOWN ARROW (SYMBOL)
W012-2	48X48	16.00					LOW CLEARANCE (SYMBOL)
W012-2x	24X18	3.00					LOW CLEARANCE (PLAQUE)
W012-2a	84X24	14.00					OVERHEAD LOW CLEARANCE (FEET AND INCHES)
W08-15	48X48	16.00					GROOVED PAVEMENT
W08-15p	30X24	5.00					MOTORCYCLE (PLAQUE)
W08-17	48X48	16.00					SHOULDER DROP-OFF (SYMBOL)
W08-17p	30X24	5.00					SHOULDER DROP-OFF (PLAQUE)
SPECIAL	120X60	50.00					LOW CLEARANCE XX FT XX IN XX MILES AHEAD
SPECIAL	120X60	50.00					WIDTH RESTRICTION XX FT XX IN XX MILES AHEAD
W013-1	30X30	6.25					ADVISORY SPEED (PLAQUE)
W016-2	30X24	5.00					XXX FEET (PLAQUE)
W016-3	30X24	5.00					X MILE (PLAQUE)
W020-1	48X48	16.00	2	32			ROAD/BRIDGE/RAMP WORK AHEAD
W020-2	48X48	16.00					DETOUR AHEAD
W020-3	48X48	16.00					ROAD CLOSED AHEAD
W020-4	48X48	16.00	2	32			ONE LANE ROAD AHEAD
W020-5	48X48	16.00					RIGHT/CENTER/LEFT LANE CLOSED AHEAD
W020-5a	48X48	16.00					2 RIGHT/CENTER/LEFT LANES CLOSED AHEAD
W020-6a	48X48	16.00					RIGHT/CENTER/LEFT LANE CLOSED
W020-7a	48X48	16.00					FLAGGER (SYMBOL) WITH FLAGS
W021-2	36X36	9.00					FRESH OIL
W021-5b	48X48	16.00					SHOULDER WORK AHEAD
W022-1	48X48	16.00					BLASTING ZONE AHEAD
W022-2	42X36	10.50					TURN OFF 2-WAY RADIO AND PHONE
W022-3	42X36	10.50					END BLASTING ZONE
W022-6e	21X15	2.19					WET PAINT (ARROW PIVOTS)
GUIDE SIGNS							
SPECIAL	36X36	9.00					FRESH OIL/LOOSE GRAVEL
E05-1	36X48	12.00					GORE EXIT
E05-2	48X36	12.00					EXIT OPEN
E05-2a	48X36	12.00					EXIT CLOSED
G020-1	60X24	10.00					ROAD WORK NEXT XX MILES
G020-2	48X24	8.00	2	16			END ROAD WORK
G020-4	36X18	4.50					PILOT CAR FOLLOW ME
SPECIAL	42X30	8.75					PLEASE WAIT FOR PILOT CAR
G020-5aP	36X24	6.00	2	12			WORK ZONE (PLAQUE)
M04-8a	24X18	3.00					END DETOUR
M04-9L	48X36	12.00					DETOUR (LEFT ARROW)
M04-9R	48X36	12.00					DETOUR (RIGHT ARROW)
M04-10L	48X18	6.00					DETOUR (ARROW LEFT)
M04-10R	48X18	6.00					DETOUR (ARROW RIGHT)
M04-10R	XXXX	XXXX					
M04-10R	XXXX	XXXX					
REGULATORY SIGNS							
R1-1	48X48	13.25					STOP
R1-2	48 TRI.	6.93					YIELD
R1-2a	36X36	9.00					TO ONCOMING TRAFFIC (PLAQUE)
R1-3	20X9	1.25					X-WAY (PLAQUE)
R2-1	36X48	12.00	4	48			SPEED LIMIT XX
R3-1	48X48	16.00					NO RIGHT TURN (SYMBOL)
R3-2	48X48	16.00					NO LEFT TURN (SYMBOL)
R3-3	36X36	9.00					NO TURNS
R3-4	48X48	16.00					NO U-TURN (SYMBOL)
R3-7L	30X30	6.25					LEFT LANE MUST TURN LEFT
R3-7R	30X30	6.25					RIGHT LANE MUST TURN RIGHT
R4-1	36X48	12.00					DO NOT PASS
R4-2	36X48	12.00					PASS WITH CARE
R4-7aL	36X48	12.00					KEEP LEFT (HORIZONTAL ARROW)
R4-7a	36X48	12.00					KEEP RIGHT (HORIZONTAL ARROW)
R5-1	30X30	6.25					DO NOT ENTER
R5-1a	36X24	6.00					WRONG WAY
R6-1L	48X18	6.00					ONE WAY ARROW (LEFT)
R6-1R	48X18	6.00					ONE WAY ARROW (RIGHT)
R6-2L	24X30	5.00					ONE WAY (LEFT)
R6-2R	24X30	5.00					ONE WAY (RIGHT)
R10-6	24X36	6.00	2	12			STOP HERE ON RED (45° ARROW)
R11-2	48X30	10.00					ROAD CLOSED
R11-3a	60X30	12.50					ROAD CLOSED XX MILES AHEAD LOCAL TRAFFIC ONLY
R11-4	60X30	12.50					ROAD CLOSED TO THRU TRAFFIC
S4-4	36X15	3.75					WHEN FLASHING
CONST-3A	60X48	20.00					FINE SIGN
CONST-3X	56X12	4.67					SPEEDING/PASSING (PLATE)
MISCELLANEOUS SIGNS							
SPECIAL	36X48	12.00					POINT OF PRESENCE
SPECIAL	96X48	32.00					POINT OF PRESENCE
CONST-7-48	48X24	8.00					RATE OUR WORK ZONE
CONST-7-72	72X36	18.00					RATE OUR WORK ZONE
616-10.05 CONSTRUCTION SIGNS TOTAL							
616-10.10 RELOCATED SIGNS TOTAL							

NOTE: QUANTITIES ON THIS SHEET ARE NOT PAY ITEM VALUES AND ARE FOR REFERENCE ONLY

NOTE: SEE "PAY TOTAL" QUANTITY SHEET FOR PAY ITEM VALUES

ITEM NUMBER	TOTAL QTY	DESCRIPTION
6122008		IMPACT ATTENUATOR (8 SAND BARRELS)
6122009		IMPACT ATTENUATOR (9 SAND BARRELS)
6122010		IMPACT ATTENUATOR (10 SAND BARRELS)
6122012	2	IMPACT ATTENUATOR (12 SAND BARRELS)
6122014		IMPACT ATTENUATOR (14 SAND BARRELS)
6122017		IMPACT ATTENUATOR (17 SAND BARRELS)
6122019		IMPACT ATTENUATOR (19 SAND BARRELS)
6122020		REPLACEMENT SAND BARREL
6122030	2	IMPACT ATTENUATOR ARRAY (RELOCATION)
6123000A		TRUCK OR TRAILER MOUNTED ATTENUATOR (TMA)
6161007		SPEED LIMIT AND STROBE LIGHT ASSEMBLY
6161008		ADVANCED WARNING RAIL SYSTEM
6161009	7	FLAG ASSEMBLY
6161020		CHANNELIZER (DRUM-LIKE)
6161022		CHANNELIZER (CONES)
6161024		CHANNELIZER (TRIM LINE) WITH LIGHT
6161025	10	CHANNELIZER (TRIM LINE)
6161026		CHANNELIZER (VERTICAL PANEL)
6161027		CHANNELIZER (VERTICAL PANEL) WITH LIGHT
6161028		CHANNELIZER
6161030		TYPE III MOVEABLE BARRICADE
6161031		TYPE III MOVEABLE BARRICADE WITH LIGHT
6161033		DIRECTION INDICATOR BARRICADE
6161034		DIRECTION INDICATOR BARRICADE, WITH LIGHT
6161040		FLASHING ARROW PANEL
6161047		TYPE III OBJECT MARKER
6161051		WARNING LIGHT, TYPE A
6161052		WARNING LIGHT, TYPE B
6161053		WARNING LIGHT, TYPE C
6161055		SEQUENTIAL FLASHING WARNING LIGHT
6161070		TUBULAR MARKER
6161095		RADAR SPEED ADVISORY SYSTEM
6161096		CHANGEABLE MESSAGE SIGN, COMMISSION FURNISHED/RETAINED
6161098		CHANGEABLE MESSAGE SIGN, CONTRACTOR FURNISHED/RETAINED
6161100		CHANGEABLE MESSAGE SIGN, CONTRACTOR FURNISHED/COMMISSION RETAINED
6173600D	275	CONTRACTOR FURNISHED/RETAINED TEMPORARY TRAFFIC BARRIER
6173602B		CONTRACTOR FURNISHED/COMMISSION RETAINED TEMPORARY TRAFFIC BARRIER
6174000A		TEMPORARY TRAFFIC BARRIER HEIGHT TRANSITION
6175010A	275	RELOCATING TEMPORARY TRAFFIC BARRIER
6176000B		COMMISSION FURNISHED/RETAINED TEMPORARY TRAFFIC BARRIER
6177000B		COMMISSION FURNISHED/RETAINED TEMPORARY TRAFFIC BARRIER HEIGHT TRANSITION
9019400		TEMPORARY LIGHTING
9029400		TEMPORARY TRAFFIC SIGNALS
6162000	2	WORK ZONE TRAFFIC SIGNALS

1 REVISED

A42961 SUBTOTALS
SUMMARY SHEET
SHEET 17 OF 19

"THIS MEDIA SHOULD NOT BE CONSIDERED A CERTIFIED DOCUMENT."

DATE PREPARED 2/13/2014

ROUTE VAR. | STATE MO

DISTRICT KC | SHEET NO. 3

COUNTY JACKSON

JOB NO. J4P2191

CONTRACT ID.

PROJECT NO.

BRIDGE NO. A42961

DESCRIPTION

DATE

IF A SEAL IS PRESENT ON THIS SHEET IT HAS BEEN ELECTRONICALLY SEALED AND DATED.

MISSOURI HIGHWAYS AND TRANSPORTATION COMMISSION

105 WEST CAPITOL
JEFFERSON CITY, MO 65102
1-888-ASK-MODOT (1-888-275-6636)

EFFECTIVE: 08-01-2012

SIGN	SIZE (IN.)	AREA (SQ. FT.)	QTY	TOTAL AREA	QTY RELOC	TOTAL RELOC AREA	DESCRIPTION
WARNING SIGNS							
W01-1L	48X48	16.00					TURN (SYMBOL LEFT ARROW)
W01-1R	48X48	16.00					TURN (SYMBOL RIGHT ARROW)
W01-2L	48X48	16.00					CURVE (SYMBOL LEFT ARROW)
W01-2R	48X48	16.00					CURVE (SYMBOL RIGHT ARROW)
W01-3L	48X48	16.00					REVERSE TURN (SYMBOL LEFT ARROW)
W01-3R	48X48	16.00					REVERSE TURN (SYMBOL RIGHT ARROW)
W01-4L	48X48	16.00					REVERSE CURVE (SYMBOL LEFT ARROW)
W01-4R	48X48	16.00	1	16			REVERSE CURVE (SYMBOL RIGHT ARROW)
W01-4bL	48X48	16.00	1	16			DOUBLE ARROW REVERSE CURVE (SYMBOL LEFT ARROWS)
W01-4bR	48X48	16.00	2	32			DOUBLE ARROW REVERSE CURVE (SYMBOL RIGHT ARROWS)
W01-4cL	48X48	16.00					TRIPLE ARROW REVERSE CURVE (SYMBOL LEFT ARROWS)
W01-4cR	48X48	16.00					TRIPLE ARROW REVERSE CURVE (SYMBOL RIGHT ARROWS)
W01-6	60X30	12.50					HORIZONTAL ARROW (SYMBOL)
W01-6a	72X36	18.00					HORIZONTAL ARROW (SYMBOL ON PERMANENT BARRICADE)
W01-7	60X30	12.50					DOUBLE HEAD HORIZONTAL ARROW (SYMBOL)
W01-7a	72X36	18.00					DOUBLE HEAD HORIZONTAL ARROW (SYMBOL ON PERMANENT BARRICADE)
W01-8	18X24	3.00					CHEVRON (SYMBOL)
W01-8a	30X36	7.50					CHEVRON (SYMBOL FOR DIVIDED HIGHWAYS)
W03-1	48X48	16.00					STOP AHEAD (SYMBOL)
W03-2	48X48	16.00					YIELD AHEAD (SYMBOL)
W03-3	48X48	16.00					SIGNAL AHEAD (SYMBOL)
W03-4	48X48	16.00					BE PREPARED TO STOP
W03-5	48X48	16.00	2	32			SPEED LIMIT AHEAD
W04-1L	48X48	16.00					MERGE (SYMBOL FROM LEFT)
W04-1R	48X48	16.00					MERGE (SYMBOL FROM RIGHT)
W05-1	48X48	16.00					ROAD/BRIDGE/RAMP NARROWS
W05-3	48X48	16.00					ONE LANE BRIDGE
W05-5	48X48	16.00					NARROW LANES
W06-1	48X48	16.00					DIVIDED HIGHWAY (SYMBOL)
W06-2	48X48	16.00					DIVIDED HIGHWAY END (SYMBOL)
W06-3	48X48	16.00					TWO WAY TRAFFIC (SYMBOL)
W07-3a	30X24	5.00					NEXT XX MILES (PLAQUE)
W08-1	48X48	16.00					BUMP
W08-2	48X48	16.00					DIP
W08-3	48X48	16.00					PAVEMENT ENDS
W08-4	48X48	16.00					SOFT SHOULDER
W08-5	48X48	16.00					SLIPPERY WHEN WET (SYMBOL)
W08-6	48X48	16.00					TRUCK CROSSING WITH FLAGS
W08-6c	48X48	16.00					TRUCK ENTRANCE
W08-7	36X36	9.00					LOOSE GRAVEL
W08-9	48X48	16.00					LOW SHOULDER
W08-11	48X48	16.00					UNEVEN LANES
W08-12	48X48	16.00					NO CENTER LINE
W10-1	42 RND.	9.62					RAILROAD CROSSING
W012-1	24X24	4.00					DOUBLE DOWN ARROW (SYMBOL)
W012-2	48X48	16.00					LOW CLEARANCE (SYMBOL)
W012-2x	24X18	3.00					LOW CLEARANCE (PLAQUE)
W012-2a	84X24	14.00					OVERHEAD LOW CLEARANCE (FEET AND INCHES)
W08-15	48X48	16.00					GROOVED PAVEMENT
W08-15p	30X24	5.00					MOTORCYCLE (PLAQUE)
W08-17	48X48	16.00					SHOULDER DROP-OFF (SYMBOL)
W08-17p	30X24	5.00					SHOULDER DROP-OFF (PLAQUE)
SPECIAL	120X60	50.00					LOW CLEARANCE XX FT XX IN XX MILES AHEAD
SPECIAL	120X60	50.00					WIDTH RESTRICTION XX FT XX IN XX MILES AHEAD
W013-1	30X30	6.25					ADVISORY SPEED (PLAQUE)
W016-2	30X24	5.00					XXX FEET (PLAQUE)
W016-3	30X24	5.00					X MILE (PLAQUE)
W020-1	48X48	16.00	5	80			ROAD/BRIDGE/RAMP WORK AHEAD
W020-2	48X48	16.00					DETOUR AHEAD
W020-3	48X48	16.00					ROAD CLOSED AHEAD
W020-4	48X48	16.00					ONE LANE ROAD AHEAD
W020-5	48X48	16.00	5	80			RIGHT/CENTER/LEFT LANE CLOSED AHEAD
W020-5a	48X48	16.00					2 RIGHT/CENTER/LEFT LANES CLOSED AHEAD
W020-6a	48X48	16.00	5	80			RIGHT/CENTER/LEFT LANE CLOSED
W020-7a	48X48	16.00					FLAGGER (SYMBOL) WITH FLAGS
W021-2	36X36	9.00					FRESH OIL
W021-5b	48X48	16.00					SHOULDER WORK AHEAD
W022-1	48X48	16.00					BLASTING ZONE AHEAD
W022-2	42X36	10.50					TURN OFF 2-WAY RADIO AND PHONE
W022-3	42X36	10.50					END BLASTING ZONE
W022-6e	21X15	2.19					WET PAINT (ARROW PIVOTS)
GUIDE SIGNS							
SPECIAL	36X36	9.00					FRESH OIL/LOOSE GRAVEL
E05-1	36X48	12.00					GORE EXIT
E05-2	48X36	12.00					EXIT OPEN
E05-2a	48X36	12.00					EXIT CLOSED
G020-1	60X24	10.00					ROAD WORK NEXT XX MILES
G020-2	48X24	8.00	6	48			END ROAD WORK
G020-4	36X18	4.50					PILOT CAR FOLLOW ME
SPECIAL	42X30	8.75					PLEASE WAIT FOR PILOT CAR
G020-5aP	36X24	6.00	2	12			WORK ZONE (PLAQUE)
M04-8a	24X18	3.00	1	3			END DETOUR
M04-9L	48X36	12.00					DETOUR (LEFT ARROW)
M04-9R	48X36	12.00					DETOUR (RIGHT ARROW)
M04-10L	48X18	6.00					DETOUR (ARROW LEFT)
M04-10R	48X18	6.00					DETOUR (ARROW RIGHT)
M04-10R	XXXX	XXXX					
M04-10R	XXXX	XXXX					
REGULATORY SIGNS							
R1-1	48X48	13.25					STOP
R1-2	48 TRI.	6.93					YIELD
R1-2a	36X36	9.00					TO ONCOMING TRAFFIC (PLAQUE)
R1-3	20X9	1.25					X-WAY (PLAQUE)
R2-1	36X48	12.00	4	48			SPEED LIMIT XX
R3-1	48X48	16.00					NO RIGHT TURN (SYMBOL)
R3-2	48X48	16.00	3	48			NO LEFT TURN (SYMBOL)
R3-3	36X36	9.00					NO TURNS
R3-4	48X48	16.00					NO U-TURN (SYMBOL)
R3-7L	30X30	6.25	3	19			LEFT LANE MUST TURN LEFT
R3-7R	30X30	6.25					RIGHT LANE MUST TURN RIGHT
R4-1	36X48	12.00					DO NOT PASS
R4-2	36X48	12.00					PASS WITH CARE
R4-7aL	36X48	12.00					KEEP LEFT (HORIZONTAL ARROW)
R4-7a	36X48	12.00					KEEP RIGHT (HORIZONTAL ARROW)
R5-1	30X30	6.25					DO NOT ENTER
R5-1a	36X24	6.00					WRONG WAY
R6-1L	48X18	6.00					ONE WAY ARROW (LEFT)
R6-1R	48X18	6.00					ONE WAY ARROW (RIGHT)
R6-2L	24X30	5.00					ONE WAY (LEFT)
R6-2R	24X30	5.00					ONE WAY (RIGHT)
R10-6	24X36	6.00					STOP HERE ON RED (45° ARROW)
R11-2	48X30	10.00					ROAD CLOSED
R11-3a	60X30	12.50					ROAD CLOSED XX MILES AHEAD LOCAL TRAFFIC ONLY
R11-4	60X30	12.50					ROAD CLOSED TO THRU TRAFFIC
S4-4	36X15	3.75					WHEN FLASHING
CONST-3A	60X48	20.00					FINE SIGN
CONST-3X	56X12	4.67					SPEEDING/PASSING (PLATE)
R9-9	24X12	2.00	2	4			
MISCELLANEOUS SIGNS							
SPECIAL	48X48	16.00	4	64			SPECIAL SIGN
SPECIAL	36X12	3.00	3	9			TRUCK
CONST-7-48	48X24	8.00					RATE OUR WORK ZONE
CONST-7-72	72X36	18.00					RATE OUR WORK ZONE
616-10.05 CONSTRUCTION SIGNS TOTAL							
616-10.10 RELOCATED SIGNS TOTAL							

NOTE: QUANTITIES ON THIS SHEET ARE NOT PAY ITEM VALUES AND ARE FOR REFERENCE ONLY

NOTE: SEE "PAY TOTAL" QUANTITY SHEET FOR PAY ITEM VALUES

ITEM NUMBER	TOTAL QTY	DESCRIPTION
6122008	4	IMPACT ATTENUATOR (8 SAND BARRELS)
6122009		IMPACT ATTENUATOR (9 SAND BARRELS)
6122010		IMPACT ATTENUATOR (10 SAND BARRELS)
6122012		IMPACT ATTENUATOR (12 SAND BARRELS)
6122014		IMPACT ATTENUATOR (14 SAND BARRELS)
6122017		IMPACT ATTENUATOR (17 SAND BARRELS)
6122019		IMPACT ATTENUATOR (19 SAND BARRELS)
6122020		REPLACEMENT SAND BARREL
6122030	4	IMPACT ATTENUATOR ARRAY (RELOCATION)
6123000A		TRUCK OR TRAILER MOUNTED ATTENUATOR (TMA)
6161007		SPEED LIMIT AND STROBE LIGHT ASSEMBLY
6161008		ADVANCED WARNING RAIL SYSTEM
6161009	15	FLAG ASSEMBLY
6161020		CHANNELIZER (DRUM-LIKE)
6161022		CHANNELIZER (CONES)
6161024	25	CHANNELIZER (TRIM LINE) WITH LIGHT
6161025	82	CHANNELIZER (TRIM LINE)
6161026		CHANNELIZER (VERTICAL PANEL)
6161027		CHANNELIZER (VERTICAL PANEL) WITH LIGHT
6161028		CHANNELIZER
6161030	8	TYPE III MOVEABLE BARRICADE
6161031		TYPE III MOVEABLE BARRICADE WITH LIGHT
6161033		DIRECTION INDICATOR BARRICADE
6161034		DIRECTION INDICATOR BARRICADE, WITH LIGHT
6161040		FLASHING ARROW PANEL
6161047		TYPE III OBJECT MARKER
6161051		WARNING LIGHT, TYPE A
6161052		WARNING LIGHT, TYPE B
6161053		WARNING LIGHT, TYPE C
6161055		SEQUENTIAL FLASHING WARNING LIGHT
6161070	18	TUBULAR MARKER
6161095		RADAR SPEED ADVISORY SYSTEM
6161096		CHANGEABLE MESSAGE SIGN, COMMISSION FURNISHED/RETAINED
6161098	4	CHANGEABLE MESSAGE SIGN, CONTRACTOR FURNISHED/RETAINED
6161100		CHANGEABLE MESSAGE SIGN, CONTRACTOR FURNISHED/COMMISSION RETAINED
6173600D		CONTRACTOR FURNISHED/RETAINED TEMPORARY TRAFFIC BARRIER
6173602B		CONTRACTOR FURNISHED/COMMISSION RETAINED TEMPORARY TRAFFIC BARRIER
6174000A		TEMPORARY TRAFFIC BARRIER HEIGHT TRANSITION
6175010A		RELOCATING TEMPORARY TRAFFIC BARRIER
6176000B		COMMISSION FURNISHED/RETAINED TEMPORARY TRAFFIC BARRIER
6177000B		COMMISSION FURNISHED/RETAINED TEMPORARY TRAFFIC BARRIER HEIGHT TRANSITION
9019400		TEMPORARY LIGHTING
9029400		TEMPORARY TRAFFIC SIGNALS
9029401		TEMPORARY TRAFFIC SIGNALS AND LIGHTING

L09292 SUBTOTALS
SUMMARY SHEET
SHEET 18 OF 19

"THIS MEDIA SHOULD NOT BE CONSIDERED A CERTIFIED DOCUMENT."

DATE PREPARED 12/15/2013

ROUTE	STATE
VAR.	MO
DISTRICT	SHEET NO.
KC	3

COUNTY: JACKSON

JOB NO.: J4P2191

CONTRACT ID.

PROJECT NO.

BRIDGE NO.: L09292

DESCRIPTION	DATE

MISSOURI HIGHWAYS AND TRANSPORTATION COMMISSION

105 WEST CAPITOL
JEFFERSON CITY, MO 65102
1-888-ASK-MODOT (1-888-275-6636)

IF A SEAL IS PRESENT ON THIS SHEET IT HAS BEEN ELECTRONICALLY SEALED AND DATED.

EFFECTIVE: 08-01-2012

NOTE: QUANTITIES BASED ON 3 BRIDGES BEING WORKED ON SIMULTANEOUSLY

NOTE: NO DIRECT PAY FOR RELOCATION OF: CHANNELIZERS, FLAG ASSEMBLIES, FLASHING ARROWS, BARRICADES, CHANGEABLE MESSAGE SIGNS, & TEMP. TRAFFIC SIGNALS

NOTE: BARRIER QUANTITY BASED ON I-670 BRIDGES BEING CONSTRUCTED WITHOUT OTHER BRIDGES BEING WORKED ON SIMULTANEOUSLY

NOTE: I-670 BRIDGES SHALL BE CONSTRUCTED WITHOUT OTHER BRIDGES BEING WORKED ON SIMULTANEOUSLY

NOTE: TEMP. BARRIER RELOCATION PAY ITEM COVERS RELOCATION OF ALL BRIDGES

SIGN	SIZE (IN.)	AREA (SQ. FT.)	QTY	TOTAL AREA	QTY RELOC	TOTAL RELOC AREA	DESCRIPTION
WARNING SIGNS							
W01-1L	48X48	16.00	1	16			TURN (SYMBOL LEFT ARROW)
W01-1R	48X48	16.00					TURN (SYMBOL RIGHT ARROW)
W01-2L	48X48	16.00					CURVE (SYMBOL LEFT ARROW)
W01-2R	48X48	16.00					CURVE (SYMBOL RIGHT ARROW)
W01-3L	48X48	16.00					REVERSE TURN (SYMBOL LEFT ARROW)
W01-3R	48X48	16.00					REVERSE TURN (SYMBOL RIGHT ARROW)
W01-4L	48X48	16.00	4	64			REVERSE CURVE (SYMBOL LEFT ARROW)
W01-4R	48X48	16.00	6	96			REVERSE CURVE (SYMBOL RIGHT ARROW)
W01-4bL	48X48	16.00	4	64			DOUBLE ARROW REVERSE CURVE (SYMBOL LEFT ARROWS)
W01-4bR	48X48	16.00	4	64			DOUBLE ARROW REVERSE CURVE (SYMBOL RIGHT ARROWS)
W01-4cL	48X48	16.00					TRIPLE ARROW REVERSE CURVE (SYMBOL LEFT ARROWS)
W01-4cR	48X48	16.00					TRIPLE ARROW REVERSE CURVE (SYMBOL RIGHT ARROWS)
W01-6	60X30	12.50	1	13			HORIZONTAL ARROW (SYMBOL)
W01-6a	72X36	18.00					HORIZONTAL ARROW (SYMBOL ON PERMANENT BARRICADE)
W01-7	60X30	12.50					DOUBLE HEAD HORIZONTAL ARROW (SYMBOL)
W01-7a	72X36	18.00					DOUBLE HEAD HORIZONTAL ARROW (SYMBOL ON PERMANENT BARRICADE)
W01-8	18X24	3.00					CHEVRON (SYMBOL)
W01-8a	30X36	7.50					CHEVRON (SYMBOL FOR DIVIDED HIGHWAYS)
W03-1	48X48	16.00					STOP AHEAD (SYMBOL)
W03-2	48X48	16.00					YIELD AHEAD (SYMBOL)
W03-3	48X48	16.00	2	32			SIGNAL AHEAD (SYMBOL)
W03-4	48X48	16.00					BE PREPARED TO STOP
W03-5	48X48	16.00	7	112			SPEED LIMIT AHEAD
W04-1L	48X48	16.00					MERGE (SYMBOL FROM LEFT)
W04-1R	48X48	16.00	1	16			MERGE (SYMBOL FROM RIGHT)
W05-1	48X48	16.00					ROAD/BRIDGE/RAMP NARROWS
W05-3	48X48	16.00					ONE LANE BRIDGE
W05-5	48X48	16.00					NARROW LANES
W06-1	48X48	16.00					DIVIDED HIGHWAY (SYMBOL)
W06-2	48X48	16.00					DIVIDED HIGHWAY END (SYMBOL)
W06-3	48X48	16.00					TWO WAY TRAFFIC (SYMBOL)
W07-3a	30X24	5.00					NEXT XX MILES (PLAQUE)
W08-1	48X48	16.00					BUMP
W08-2	48X48	16.00					DIP
W08-3	48X48	16.00					PAVEMENT ENDS
W08-4	48X48	16.00					SOFT SHOULDER
W08-5	48X48	16.00					SLIPPERY WHEN WET (SYMBOL)
W08-6	48X48	16.00					TRUCK CROSSING WITH FLAGS
W08-6c	48X48	16.00					TRUCK ENTRANCE
W08-7	36X36	9.00					LOOSE GRAVEL
W08-9	48X48	16.00					LOW SHOULDER
W08-11	48X48	16.00					UNEVEN LANES
W08-12	48X48	16.00					NO CENTER LINE
W10-1	42 RND.	9.62					RAILROAD CROSSING
W012-1	24X24	4.00					DOUBLE DOWN ARROW (SYMBOL)
W012-2	48X48	16.00					LOW CLEARANCE (SYMBOL)
W012-2x	24X18	3.00					LOW CLEARANCE (PLAQUE)
W012-2a	84X24	14.00					OVERHEAD LOW CLEARANCE (FEET AND INCHES)
W08-15	48X48	16.00					GROOVED PAVEMENT
W08-15p	30X24	5.00					MOTORCYCLE (PLAQUE)
W08-17	48X48	16.00					SHOULDER DROP-OFF (SYMBOL)
W08-17p	30X24	5.00					SHOULDER DROP-OFF (PLAQUE)
SPECIAL	120X60	50.00					LOW CLEARANCE XX FT XX IN XX MILES AHEAD
SPECIAL	120X60	50.00					WIDTH RESTRICTION XX FT XX IN XX MILES AHEAD
W013-1	30X30	6.25					ADVISORY SPEED (PLAQUE)
W016-2	30X24	5.00					XXX FEET (PLAQUE)
W016-3	30X24	5.00					X MILE (PLAQUE)
W020-1	48X48	16.00	18	288			ROAD/BRIDGE/RAMP WORK AHEAD
W020-2	48X48	16.00	2	32			DETOUR AHEAD
W020-3	48X48	16.00	13	208			ROAD CLOSED AHEAD
W020-4	48X48	16.00					ONE LANE ROAD AHEAD
W020-5	48X48	16.00	10	160			RIGHT/CENTER/LEFT LANE CLOSED AHEAD
W020-5a	48X48	16.00	2	32			2 RIGHT/CENTER/LEFT LANES CLOSED AHEAD
W020-6a	48X48	16.00	9	144			RIGHT/CENTER/LEFT LANE CLOSED
W020-3a	48X48	16.00					FLAGGER (SYMBOL) WITH FLAGS
W020-3a	48X48	16.00	2	32			FRESH OIL
W021-5b	48X48	16.00					SHOULDER WORK AHEAD
W022-1	48X48	16.00					BLASTING ZONE AHEAD
W022-2	42X36	10.50					TURN OFF 2-WAY RADIO AND PHONE
W022-3	42X36	10.50					END BLASTING ZONE
W022-6e	21X15	2.19					WET PAINT (ARROW PIVOTS)
GUIDE SIGNS							
SPECIAL	36X36	9.00					FRESH OIL/LOOSE GRAVEL
E05-1	36X48	12.00					GORE EXIT
E05-2	48X36	12.00					EXIT OPEN
E05-2a	48X36	12.00					EXIT CLOSED
G020-1	60X24	10.00					ROAD WORK NEXT XX MILES
G020-2	48X24	8.00	17	136			END ROAD WORK
G020-4	36X18	4.50					PILOT CAR FOLLOW ME
SPECIAL	42X30	8.75					PLEASE WAIT FOR PILOT CAR
G020-5aP	36X24	6.00	7	42			WORK ZONE (PLAQUE)
M04-8a	24X18	3.00	5	15			END DETOUR
M04-9L	48X36	12.00					DETOUR (LEFT ARROW)
M04-9R	48X36	12.00					DETOUR (RIGHT ARROW)
M04-10L	48X18	6.00					DETOUR (ARROW LEFT)
M04-10R	48X18	6.00					DETOUR (ARROW RIGHT)
M04-10R	XXXX	XXXX					
M04-10R	XXXX	XXXX					
REGULATORY SIGNS							
R1-1	48X48	13.25					STOP
R1-2	48 TRI.	6.93					YIELD
R1-2a	36X36	9.00					TO ONCOMING TRAFFIC (PLAQUE)
R1-3	20X9	1.25					X-WAY (PLAQUE)
R2-1	36X48	12.00	14	168			SPEED LIMIT XX
R3-1	48X48	16.00					NO RIGHT TURN (SYMBOL)
R3-2	48X48	16.00	5	80			NO LEFT TURN (SYMBOL)
R3-3	36X36	9.00					NO TURNS
R3-4	48X48	16.00					NO U-TURN (SYMBOL)
R3-7L	30X30	6.25	9	57			LEFT LANE MUST TURN LEFT
R3-7R	30X30	6.25					RIGHT LANE MUST TURN RIGHT
R4-1	36X48	12.00					DO NOT PASS
R4-2	36X48	12.00					PASS WITH CARE
R4-7aL	36X48	12.00					KEEP LEFT (HORIZONTAL ARROW)
R4-7a	36X48	12.00					KEEP RIGHT (HORIZONTAL ARROW)
R5-1	30X30	6.25					DO NOT ENTER
R5-1a	36X24	6.00					WRONG WAY
R6-1L	48X18	6.00					ONE WAY ARROW (LEFT)
R6-1R	48X18	6.00					ONE WAY ARROW (RIGHT)
R6-2L	24X30	5.00					ONE WAY (LEFT)
R6-2R	24X30	5.00					ONE WAY (RIGHT)
R10-6	24X36	6.00	2	12			STOP HERE ON RED (45° ARROW)
R11-2	48X30	10.00	8	80			ROAD CLOSED
R11-3a	60X30	12.50					ROAD CLOSED XX MILES AHEAD LOCAL TRAFFIC ONLY
R11-4	60X30	12.50					ROAD CLOSED TO THRU TRAFFIC
S4-4	36X15	3.75					WHEN FLASHING
CONST-3A	60X48	20.00					FINE SIGN
CONST-3X	56X12	4.67					SPEEDING/PASSING (PLATE)
R9-9	24X12	2.00	4	8			
MISCELLANEOUS SIGNS							
SPECIAL	48X48	16.00	7	112			SPECIAL SIGN
SPECIAL	48X48	16.00	10	160			SPECIAL SIGN
SPECIAL	48X48	16.00	4	64			SPECIAL SIGN
SPECIAL	36X12	3.00	5	15			SPECIAL SIGN
616-10.05 CONSTRUCTION SIGNS TOTAL				2322			
616-10.10 RELOCATED SIGNS TOTAL							

ITEM NUMBER	TOTAL QTY	DESCRIPTION
6122008	8	IMPACT ATTENUATOR (8 SAND BARRELS)
6122009		IMPACT ATTENUATOR (9 SAND BARRELS)
6122010		IMPACT ATTENUATOR (10 SAND BARRELS)
6122012	6	IMPACT ATTENUATOR (12 SAND BARRELS)
6122014		IMPACT ATTENUATOR (14 SAND BARRELS)
6122017		IMPACT ATTENUATOR (17 SAND BARRELS)
6122019		IMPACT ATTENUATOR (19 SAND BARRELS)
6122020		REPLACEMENT SAND BARREL
6122030	14	IMPACT ATTENUATOR ARRAY (RELOCATION)
6123000A		TRUCK OR TRAILER MOUNTED ATTENUATOR (TMA)
6161007		SPEED LIMIT AND STROBE LIGHT ASSEMBLY
6161008		ADVANCED WARNING RAIL SYSTEM
6161009	52	FLAG ASSEMBLY
6161020		CHANNELIZER (DRUM-LIKE)
6161022		CHANNELIZER (CONES)
6161024	60	CHANNELIZER (TRIM LINE) WITH LIGHT
6161025	220	CHANNELIZER (TRIM LINE)
6161026		CHANNELIZER (VERTICAL PANEL)
6161027		CHANNELIZER (VERTICAL PANEL) WITH LIGHT
6161028		CHANNELIZER
6161030	36	TYPE III MOVEABLE BARRICADE
6161031		TYPE III MOVEABLE BARRICADE WITH LIGHT
6161033		DIRECTION INDICATOR BARRICADE
6161034		DIRECTION INDICATOR BARRICADE, WITH LIGHT
6161040	6	FLASHING ARROW PANEL
6161047		TYPE III OBJECT MARKER
6161051		WARNING LIGHT, TYPE A
6161052		WARNING LIGHT, TYPE B
6161053		WARNING LIGHT, TYPE C
6161055		SEQUENTIAL FLASHING WARNING LIGHT
6161070		TUBULAR MARKER
6161095		RADAR SPEED ADVISORY SYSTEM
6161096	12	CHANGEABLE MESSAGE SIGN, COMMISSION FURNISHED/RETAINED
6161098		CHANGEABLE MESSAGE SIGN, CONTRACTOR FURNISHED/RETAINED
6161100		CHANGEABLE MESSAGE SIGN, CONTRACTOR FURNISHED/COMMISSION RETAINED
6173600D	3775	CONTRACTOR FURNISHED/RETAINED TEMPORARY TRAFFIC BARRIER
6173602B		CONTRACTOR FURNISHED/COMMISSION RETAINED TEMPORARY TRAFFIC BARRIER
6174000A		TEMPORARY TRAFFIC BARRIER HEIGHT TRANSITION
6175010A	3775	RELOCATING TEMPORARY TRAFFIC BARRIER
6176000B		COMMISSION FURNISHED/RETAINED TEMPORARY TRAFFIC BARRIER
6177000B		COMMISSION FURNISHED/RETAINED TEMPORARY TRAFFIC BARRIER HEIGHT TRANSITION
9019400		TEMPORARY LIGHTING
9029400		TEMPORARY TRAFFIC SIGNALS
6162000	2	WORK ZONE TRAFFIC SIGNALS

1 REVISED

PAY TOTALS
SUMMARY SHEET
SHEET 19 OF 19

"THIS MEDIA SHOULD NOT BE CONSIDERED A CERTIFIED DOCUMENT."

DATE PREPARED: 2/13/2014

ROUTE: VAR. | STATE: MO

DISTRICT: KC | SHEET NO.: 3

COUNTY: JACKSON

JOB NO.: J4P2191

CONTRACT ID.

PROJECT NO.

BRIDGE NO.: VARIES

DESCRIPTION	DATE

MISSOURI HIGHWAYS AND TRANSPORTATION COMMISSION

105 WEST CAPITOL
JEFFERSON CITY, MO 65102
1-888-ASK-MODOT (1-888-275-6636)

IF A SEAL IS PRESENT ON THIS SHEET IT HAS BEEN ELECTRONICALLY SEALED AND DATED.

ANY WORK INDICATED ON THE PLANS THAT EXTENDS BEYOND THE PROJECT LIMITS IS CONSIDERED INCIDENTAL TO AND A PART OF THE CONSTRUCTION OF THIS PROJECT.

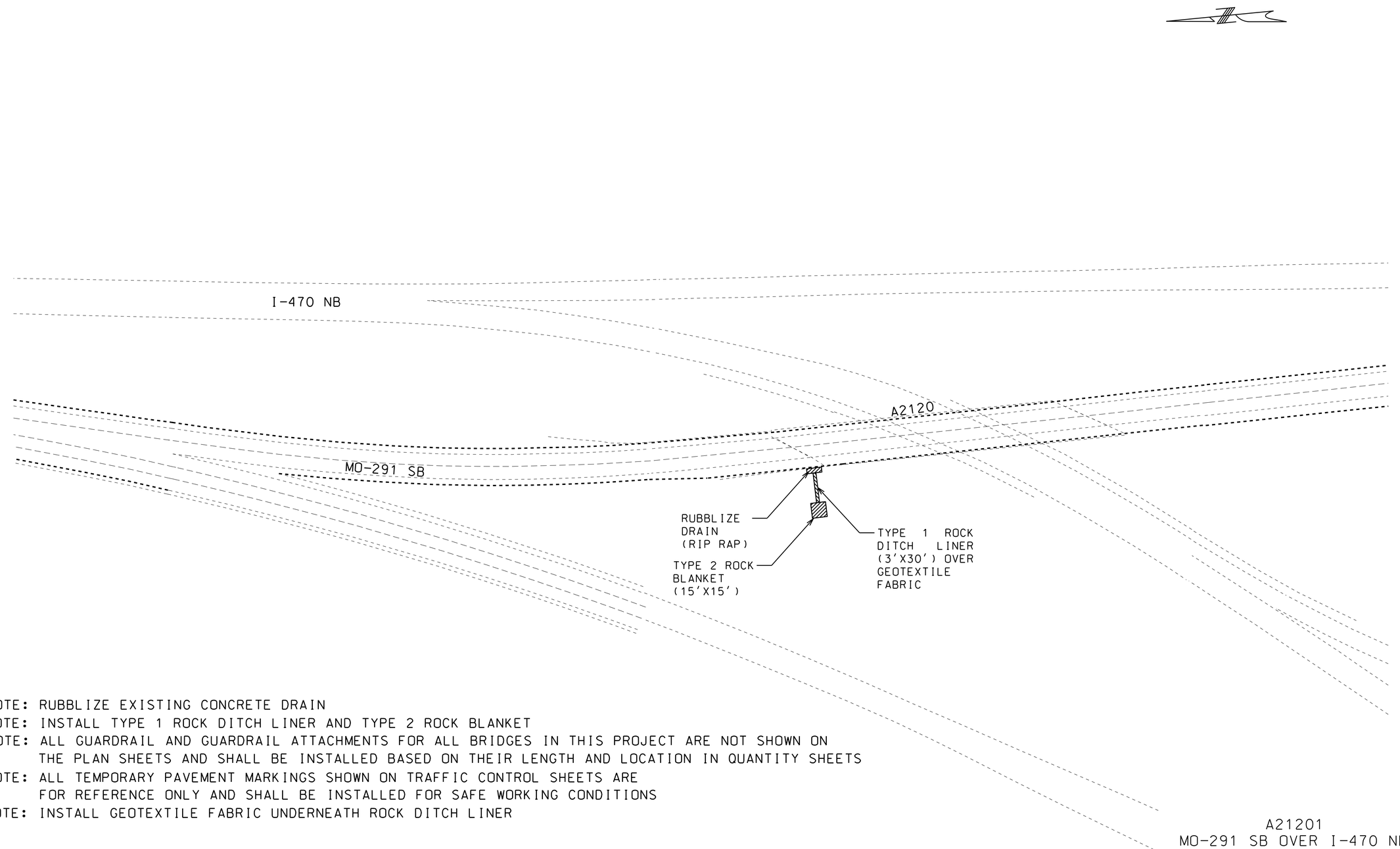

NOTE: RUBBLIZE EXISTING CONCRETE DRAIN
NOTE: INSTALL TYPE 1 ROCK DITCH LINER AND TYPE 2 ROCK BLANKET
NOTE: ALL GUARDRAIL AND GUARDRAIL ATTACHMENTS FOR ALL BRIDGES IN THIS PROJECT ARE NOT SHOWN ON THE PLAN SHEETS AND SHALL BE INSTALLED BASED ON THEIR LENGTH AND LOCATION IN QUANTITY SHEETS
NOTE: ALL TEMPORARY PAVEMENT MARKINGS SHOWN ON TRAFFIC CONTROL SHEETS ARE FOR REFERENCE ONLY AND SHALL BE INSTALLED FOR SAFE WORKING CONDITIONS
NOTE: INSTALL GEOTEXTILE FABRIC UNDERNEATH ROCK DITCH LINER

NOT TO SCALE

A21201
MO-291 SB OVER I-470 NB
PLAN SHEET
SHEET 1 OF 6

"THIS MEDIA SHOULD NOT BE CONSIDERED A CERTIFIED DOCUMENT."

DATE PREPARED	12/15/2013
ROUTE	291
STATE	MO
DISTRICT	KC
SHEET NO.	4
COUNTY	JACKSON
JOB NO.	J4P2191
CONTRACT ID.	
PROJECT NO.	
BRIDGE NO.	A21201

DATE	DESCRIPTION

MISSOURI HIGHWAYS AND TRANSPORTATION COMMISSION
105 WEST CAPITOL
JEFFERSON CITY, MO 65102
1-888-ASK-MODOT (1-888-275-6636)

IF A SEAL IS PRESENT ON THIS SHEET IT HAS BEEN ELECTRONICALLY SEALED AND DATED.

REV.

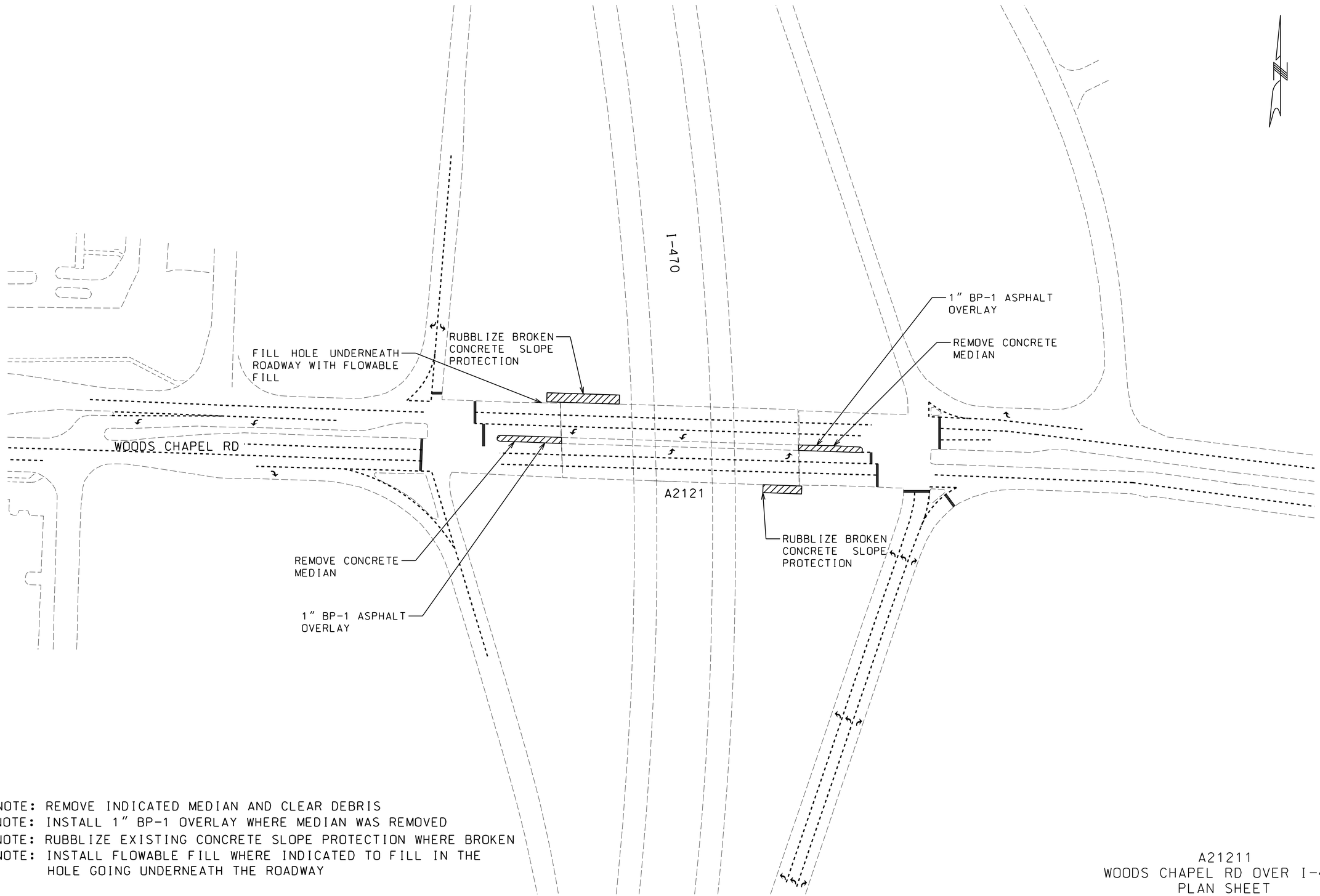

NOTE: REMOVE INDICATED MEDIAN AND CLEAR DEBRIS
NOTE: INSTALL 1" BP-1 OVERLAY WHERE MEDIAN WAS REMOVED
NOTE: RUBBLIZE EXISTING CONCRETE SLOPE PROTECTION WHERE BROKEN
NOTE: INSTALL FLOWABLE FILL WHERE INDICATED TO FILL IN THE HOLE GOING UNDERNEATH THE ROADWAY

NOT TO SCALE

A21211
WOODS CHAPEL RD OVER I-470
PLAN SHEET
SHEET 2 OF 6

"THIS MEDIA SHOULD NOT BE CONSIDERED A CERTIFIED DOCUMENT."

DATE PREPARED	12/15/2013
ROUTE	VAR
STATE	MO
DISTRICT	KC
SHEET NO.	5
COUNTY	JACKSON
JOB NO.	J4P2191
CONTRACT ID.	
PROJECT NO.	
BRIDGE NO.	A21211

DATE	DESCRIPTION

MISSOURI HIGHWAYS AND TRANSPORTATION COMMISSION
105 WEST CAPITOL
JEFFERSON CITY, MO 65102
1-888-ASK-MODOT (1-888-275-6636)

IF A SEAL IS PRESENT ON THIS SHEET IT HAS BEEN ELECTRONICALLY SEALED AND DATED.

REV.

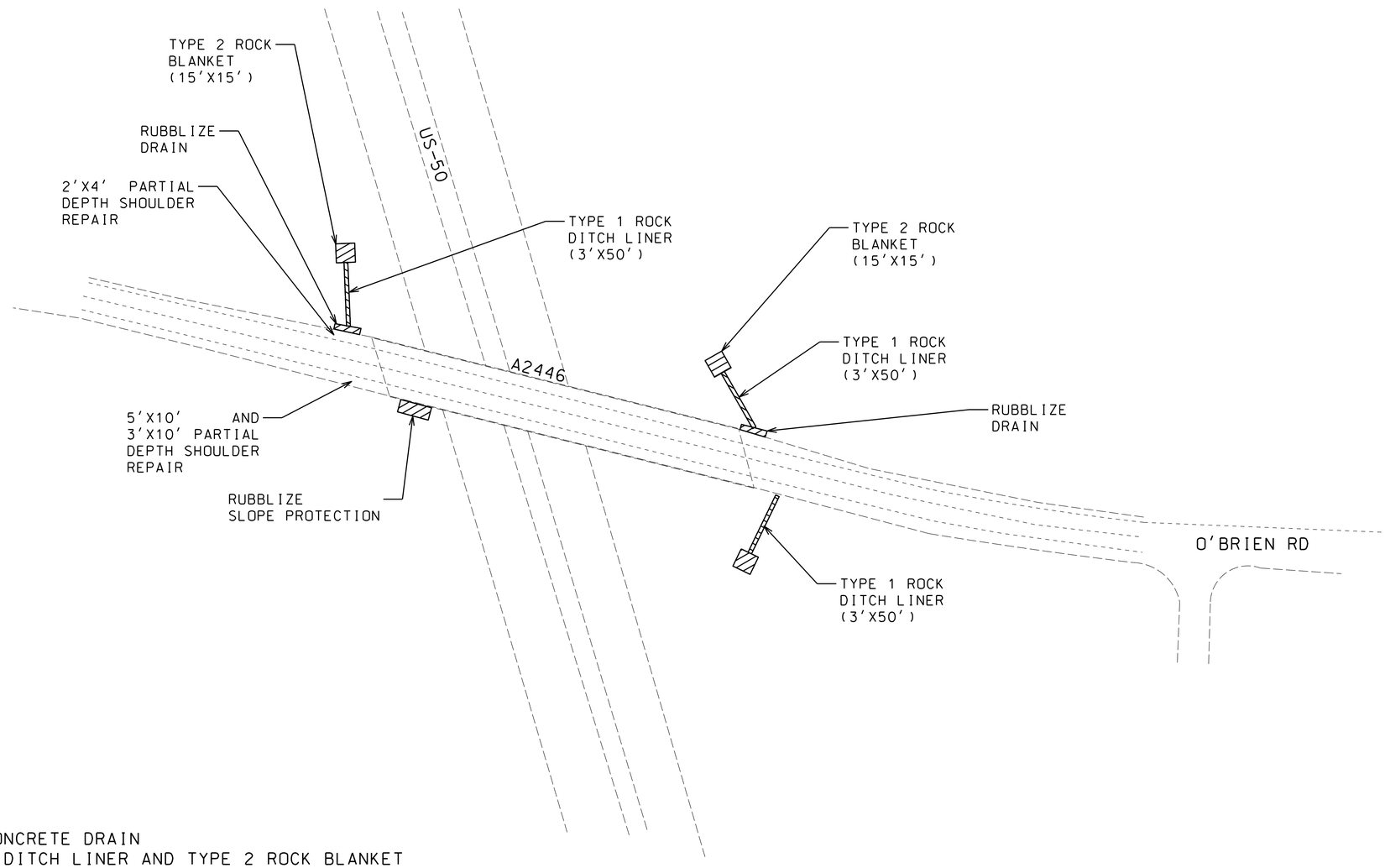

NOTE: RUBBLIZE EXISTING CONCRETE DRAIN
NOTE: INSTALL TYPE 1 ROCK DITCH LINER AND TYPE 2 ROCK BLANKET
NOTE: INSTALL GEOTEXTILE FABRIC UNDERNEATH ROCK DITCH LINER
NOTE: INSTALL PARTIAL DEPTH SHOULDER REPAIR WHERE INDICATED

NOT TO SCALE

A24461
O'BRIEN RD OVER US-50
PLAN SHEET
SHEET 3 OF 6

"THIS MEDIA SHOULD NOT BE CONSIDERED A CERTIFIED DOCUMENT."

DATE PREPARED	12/15/2013
ROUTE	VAR
STATE	MO
DISTRICT	KC
SHEET NO.	6
COUNTY	JACKSON
JOB NO.	J4P2191
CONTRACT ID.	
PROJECT NO.	
BRIDGE NO.	A24461

DATE	DESCRIPTION

MISSOURI HIGHWAYS AND TRANSPORTATION COMMISSION
105 WEST CAPITOL
JEFFERSON CITY, MO 65102
1-888-ASK-MODOT (1-888-275-6636)

IF A SEAL IS PRESENT ON THIS SHEET IT HAS BEEN ELECTRONICALLY SEALED AND DATED.

REV.

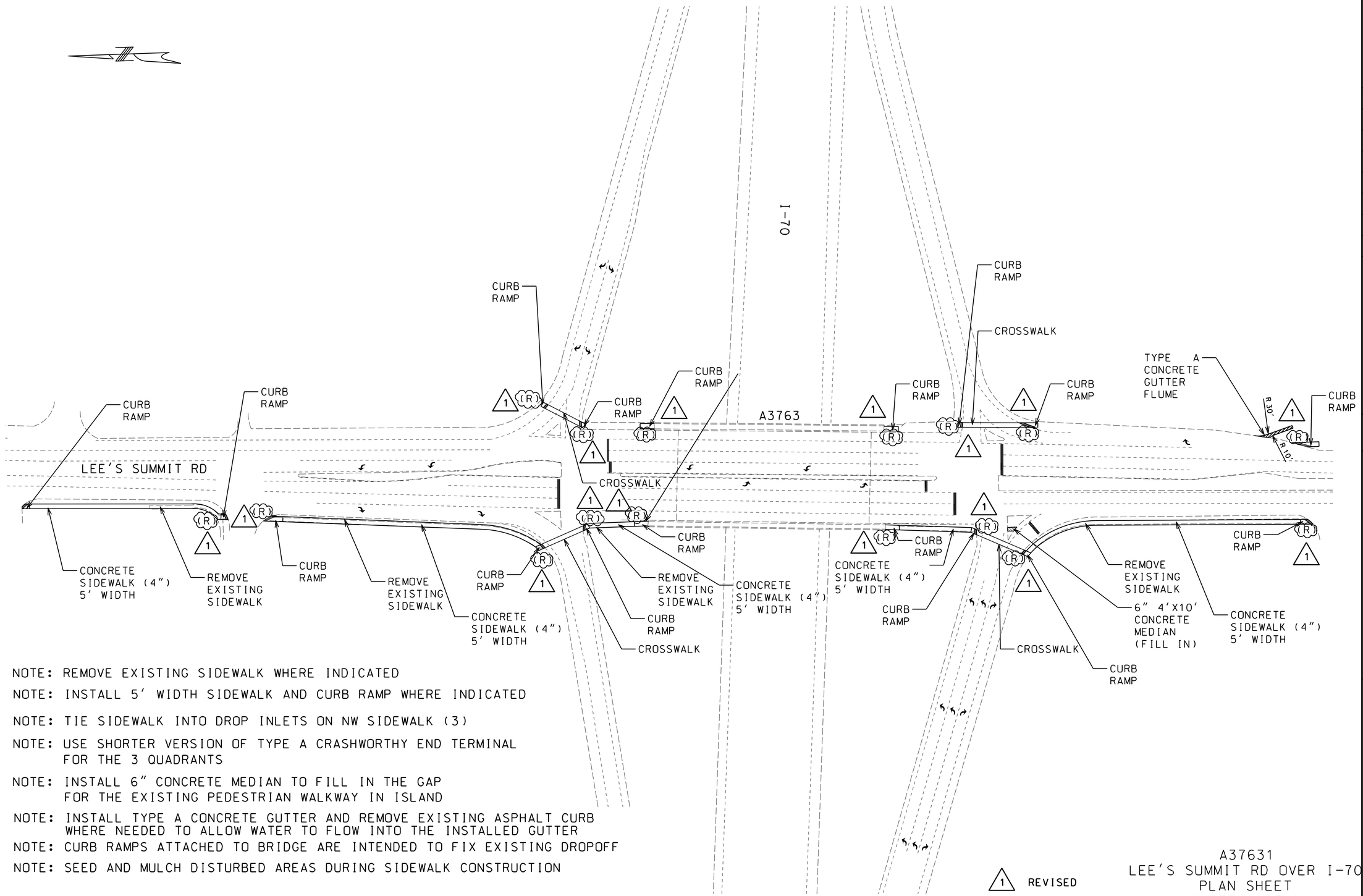

NOTE: REMOVE EXISTING SIDEWALK WHERE INDICATED

NOTE: INSTALL 5' WIDTH SIDEWALK AND CURB RAMP WHERE INDICATED

NOTE: TIE SIDEWALK INTO DROP INLETS ON NW SIDEWALK (3)

NOTE: USE SHORTER VERSION OF TYPE A CRASHWORTHY END TERMINAL FOR THE 3 QUADRANTS

NOTE: INSTALL 6" CONCRETE MEDIAN TO FILL IN THE GAP FOR THE EXISTING PEDESTRIAN WALKWAY IN ISLAND

NOTE: INSTALL TYPE A CONCRETE GUTTER AND REMOVE EXISTING ASPHALT CURB WHERE NEEDED TO ALLOW WATER TO FLOW INTO THE INSTALLED GUTTER

NOTE: CURB RAMPS ATTACHED TO BRIDGE ARE INTENDED TO FIX EXISTING DROPOFF

NOTE: SEED AND MULCH DISTURBED AREAS DURING SIDEWALK CONSTRUCTION

NOT TO SCALE

1 REVISED

A37631
LEE'S SUMMIT RD OVER I-70
PLAN SHEET
SHEET 4 OF 6

"THIS MEDIA SHOULD NOT BE CONSIDERED A CERTIFIED DOCUMENT."

DATE PREPARED	2/13/2014
ROUTE	VAR.
STATE	MO
DISTRICT	KC
SHEET NO.	7
COUNTY	JACKSON
JOB NO.	J4P2191
CONTRACT ID.	
PROJECT NO.	
BRIDGE NO.	A37631

DESCRIPTION

DATE

MISSOURI HIGHWAYS AND TRANSPORTATION COMMISSION

105 WEST CAPITOL
JEFFERSON CITY, MO 65102
1-888-ASK-MODOT (1-888-275-6636)

IF A SEAL IS PRESENT ON THIS SHEET IT HAS BEEN ELECTRONICALLY SEALED AND DATED.

REV.

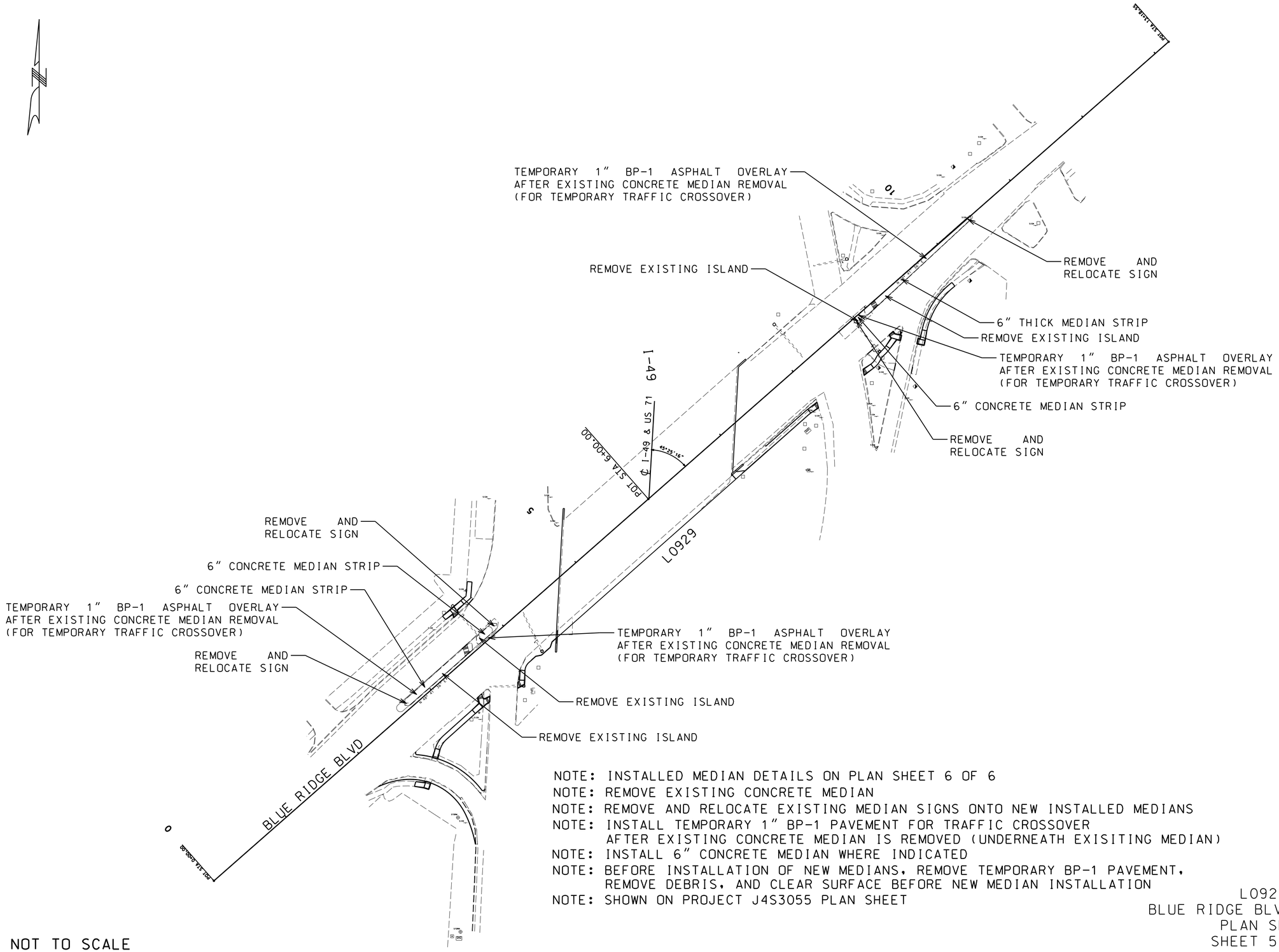

NOTE: INSTALLED MEDIAN DETAILS ON PLAN SHEET 6 OF 6
NOTE: REMOVE EXISTING CONCRETE MEDIAN
NOTE: REMOVE AND RELOCATE EXISTING MEDIAN SIGNS ONTO NEW INSTALLED MEDIANS
NOTE: INSTALL TEMPORARY 1" BP-1 PAVEMENT FOR TRAFFIC CROSSOVER AFTER EXISTING CONCRETE MEDIAN IS REMOVED (UNDERNEATH EXISITING MEDIAN)
NOTE: INSTALL 6" CONCRETE MEDIAN WHERE INDICATED
NOTE: BEFORE INSTALLATION OF NEW MEDIANS, REMOVE TEMPORARY BP-1 PAVEMENT, REMOVE DEBRIS, AND CLEAR SURFACE BEFORE NEW MEDIAN INSTALLATION
NOTE: SHOWN ON PROJECT J4S3055 PLAN SHEET

NOT TO SCALE

L09292
BLUE RIDGE BLVD OVER I-49
PLAN SHEET
SHEET 5 OF 6

"THIS MEDIA SHOULD NOT BE CONSIDERED A CERTIFIED DOCUMENT."

DATE PREPARED	12/15/2013
ROUTE	BLUE RIDGE
STATE	MO
DISTRICT	KC
SHEET NO.	8
COUNTY	JACKSON
JOB NO.	J4P2191
CONTRACT ID.	
PROJECT NO.	
BRIDGE NO.	L09292

DATE	DESCRIPTION

MISSOURI HIGHWAYS AND TRANSPORTATION COMMISSION
105 WEST CAPITOL
JEFFERSON CITY, MO 65102
1-888-ASK-MODOT (1-888-275-6636)

IF A SEAL IS PRESENT ON THIS SHEET IT HAS BEEN ELECTRONICALLY SEALED AND DATED.

REV.

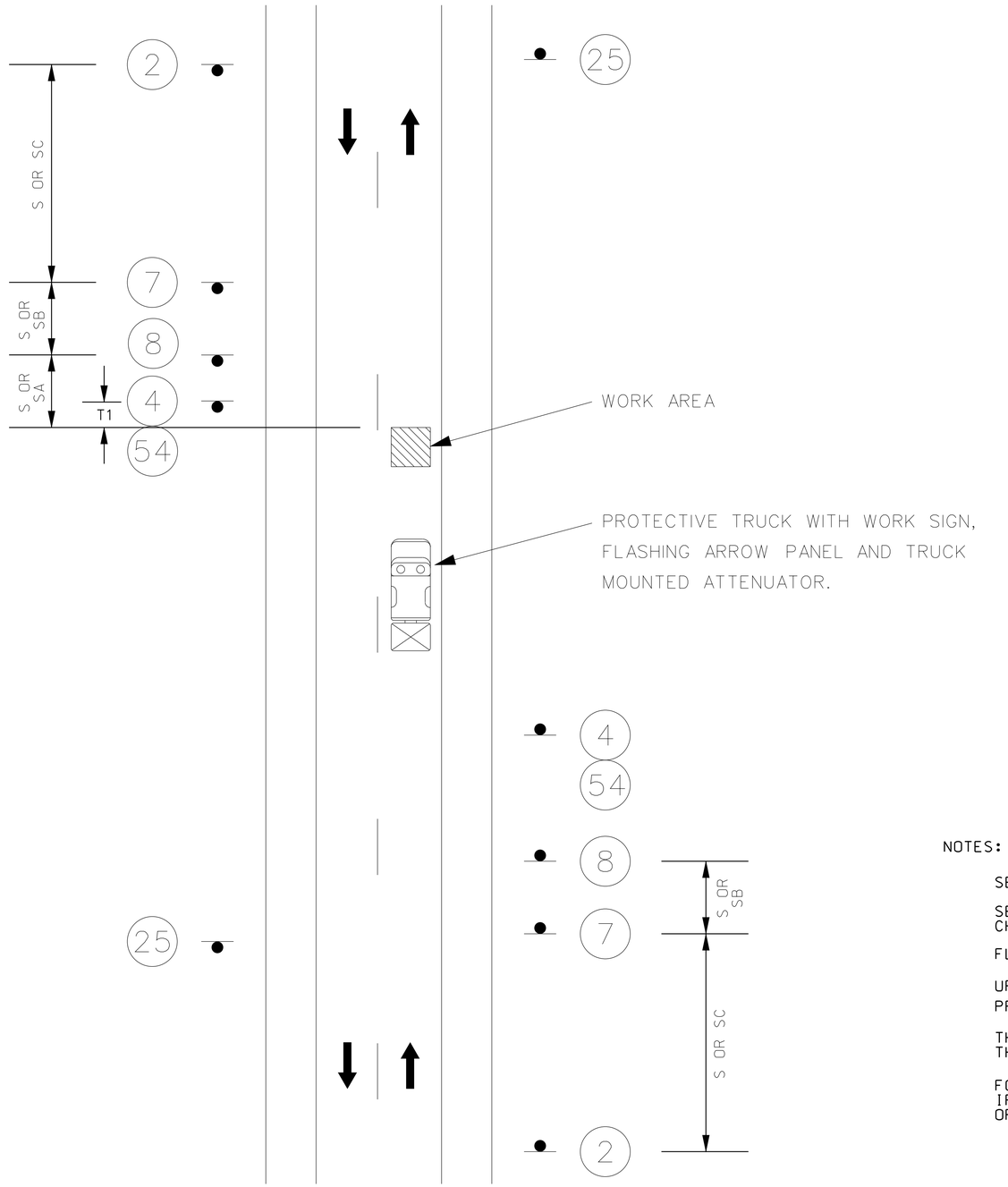

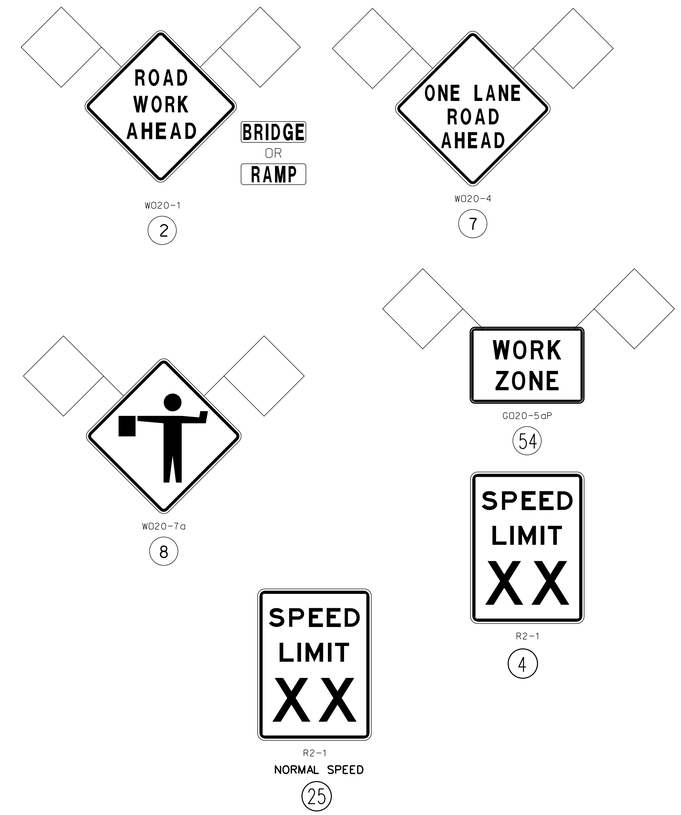

NOTES:

SEE TRAFFIC CONTROL SHEET 1 FOR WORK ZONE SPEED LIMIT GUIDELINES.

SEE TRAFFIC CONTROL SHEET 1 FOR SIGN SPACING, DEVICE SPACING AND CHANNELIZING TAPER LENGTHS.

FLASHING ARROW PANELS SHALL BE OPERATED IN CAUTION MODE.

UPON APPROVAL OF THE ENGINEER, THE CONTRACTOR MAY PROVIDE ADDITIONAL PROTECTIVE TRUCKS EQUIPPED WITH PROPER WARNING DEVICES.

THE FLAGGER POSITION SHOULD BE LOCATED WHERE THEY WILL PROVIDE THE MOST VALUE TO THE MOTORIST AND THE WORK CREW.

FOR SHORT DISTANCE LANE CLOSURES, ONE FLAGGER MAY BE SUFFICIENT IF THERE IS ADEQUATE SIGHT DISTANCE FOR THE PROPER HANDLING OF TRAFFIC.

TWO-LANE UNDIVIDED HIGHWAY
MOVING OPERATION ON HIGHWAY OPEN TO TRAFFIC

MOVING OPERATION
OPEN TO TRAFFIC
TEMPORARY
TRAFFIC CONTROL
SHEET 4 OF 27

"THIS MEDIA SHOULD NOT BE CONSIDERED A CERTIFIED DOCUMENT."

DATE PREPARED	12/11/2013
ROUTE	VAR.
STATE	MO
DISTRICT	KC
SHEET NO.	8
COUNTY	VARIOUS
JOB NO.	J4P2191B
CONTRACT ID.	
PROJECT NO.	
BRIDGE NO.	

DESCRIPTION	DATE

MISSOURI HIGHWAYS AND TRANSPORTATION COMMISSION
105 WEST CAPITOL
JEFFERSON CITY, MO 65102
1-888-ASK-MODOT (1-888-275-6636)

IF A SEAL IS PRESENT ON THIS SHEET IT HAS BEEN ELECTRONICALLY SEALED AND DATED.

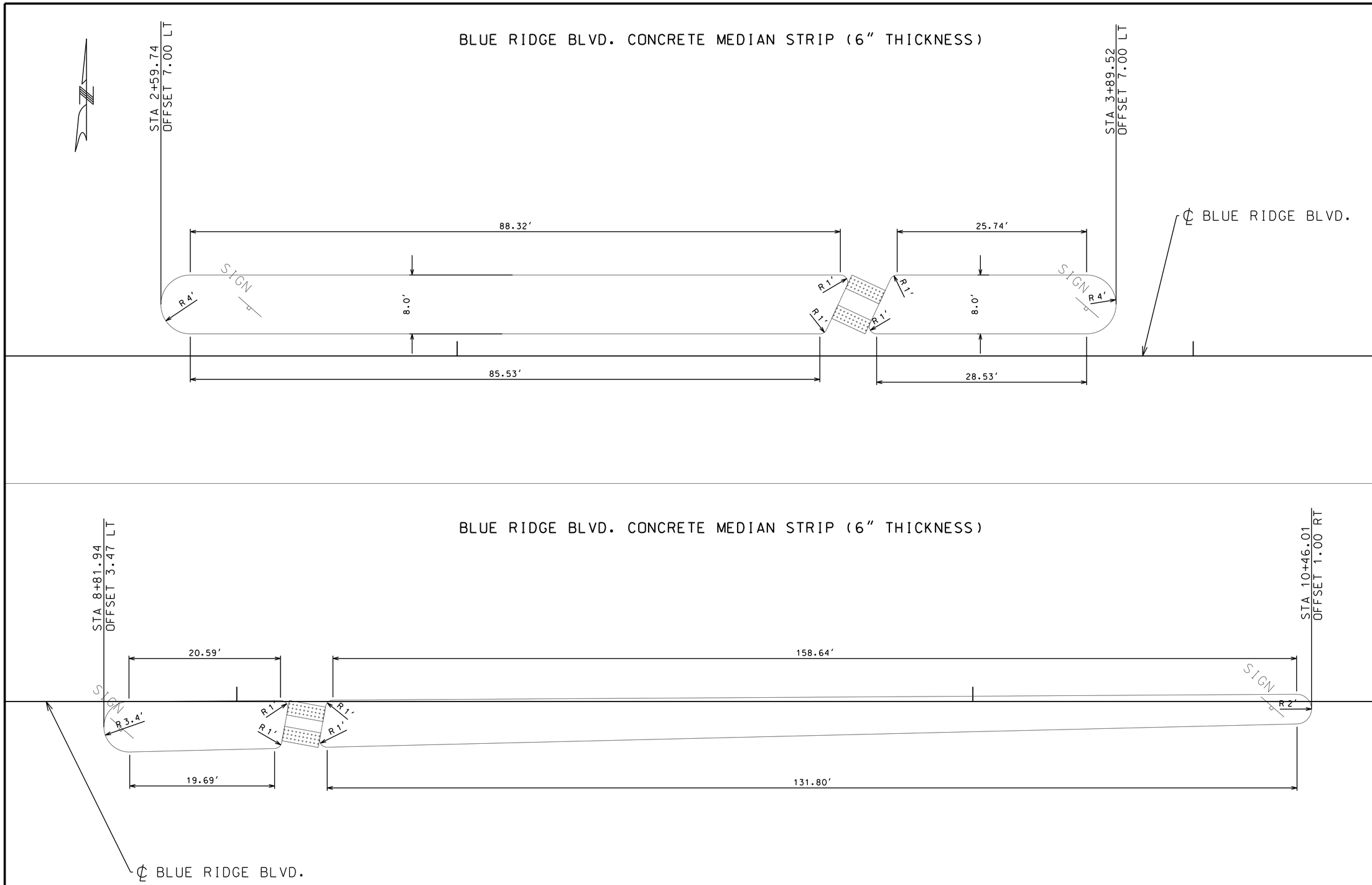

NOTE: SHOWN ON PROJECT J4S3055 PLAN SHEET

L09292
BLUE RIDGE BLVD OVER I-49
PLAN SHEET
SHEET 6 OF 6

"THIS MEDIA SHOULD NOT BE CONSIDERED A CERTIFIED DOCUMENT."

DATE PREPARED	
12/15/2013	
ROUTE	STATE
VAR.	MO
DISTRICT	SHEET NO.
KC	9
COUNTY	
JACKSON	
JOB NO.	
J4P2191	
CONTRACT ID.	
PROJECT NO.	
BRIDGE NO.	
L09292	

DATE	DESCRIPTION

MISSOURI HIGHWAYS AND TRANSPORTATION COMMISSION
105 WEST CAPITOL
JEFFERSON CITY, MO 65102
1-888-ASK-MODOT (1-888-275-6636)

IF A SEAL IS PRESENT ON THIS SHEET IT HAS BEEN ELECTRONICALLY SEALED AND DATED.

REV.

Sign Spacing, Device Spacing, Channelizing Taper Lengths And Recommended Maximum Speed Reductions

TAPER LENGTHS AND SPACING OF CHANNELIZING DEVICES						
SPEED (P) MPH	MINIMUM (T2) TAPER LENGTHS (L) FOR LANE WIDTHS (W)			MINIMUM TAPER SHOULDER (T1)	MAXIMUM CHANNELIZER SPACING	
	10 FT	11 FT	12 FT		THROUGH TAPER	THROUGH WORK AREA
0-35	205 FT	225 FT	245 FT	70	35 FT	50 FT
40-45	450 FT	495 FT	540 FT	150	40 FT	100 FT
50-55	550 FT	605 FT	660 FT	185	50 FT	100 FT
60-70	700 FT	770 FT	840 FT	235	60 FT	100 FT

TAPER LENGTH (L)

L = W X P FOR 40 MPH OR MORE

$L = \frac{WP^2}{60}$ FOR 35 MPH OR LESS

L = TAPER LENGTH IN FEET

W = LATERAL SHIFT IN FEET

P = POSTED SPEED PRIOR TO ROAD WORK IN MPH

LONGITUDINAL BUFFER SPACE	
SPEED (P) MPH	BUFFER SPACE (FEET)
0-35	250
40-45	360
50-55	495
60-70	730

SIGN SPACING FOR ADVANCE SIGN SERIES (1) (2)		
SPEED (P) MPH	NON-DIVIDED HIGHWAYS (S)	DIVIDED HIGHWAYS (S)
0-35	200 FT	200 FT
40-45	350 FT	500 FT
50-55	500 FT	1000 FT
60-70	SA-1000 FT, SB-1500 FT, SC-2640 FT **	

** THE SA DIMENSION IS THE DISTANCE FROM THE TRANSITION OR POINT OF RESTRICTION TO THE FIRST SIGN.

THE SB DIMENSION IS THE DISTANCE BETWEEN THE FIRST AND SECOND SIGNS.

THE SC DIMENSION IS THE DISTANCE BETWEEN THE SECOND AND THIRD SIGNS.

(THE "FIRST SIGN" IS THE SIGN IN A THREE-SIGN SERIES THAT IS CLOSEST TO THE TEMPORARY TRAFFIC CONTROL ZONE. THE "THIRD SIGN" IS THE SIGN THAT IS FURTHEST UPSTREAM FROM THE TEMPORARY TRAFFIC CONTROL ZONE)

NOTES:

DIMENSIONS IN FEET UNLESS OTHERWISE NOTED.

(1) SPACING BETWEEN SIGNS AND SPACING BETWEEN LAST SIGN AND FLAGGER, BEGINNING OF TAPER, OR SIGNED CONDITION

(2) SPACINGS MAY BE ADJUSTED AS NECESSARY TO MEET FIELD CONDITIONS

(3) TAPER LENGTHS SHOWN INCLUDE LENGTH REQUIRED FOR LANE AND 10' SHOULDER.

(4) CONCRETE BARRIER MAY BE INSTALLED AT AN 8:1 FLARE RATE FROM THE SHOULDER POINT TO THE LIMITS OF THE CLEAR ZONE WHERE THEY SIDE SLOPE IS 6:1 OR FLATTER.

EPG TABLE 616.29 RECOMMENDED MAXIMUM SPEED REDUCTIONS	
ACTIVITY (I.E. WORKERS, EQUIPMENT OR MATERIAL) LOCATION	RECOMMENDED WORK ZONE SPEED REDUCTION (WHEN APPLICABLE)
10 FT. BEYOND EDGE OF TRAVELWAY TO EDGE OF RIGHT OF WAY	NO SPEED REDUCTION
IN TRAFFIC LANE OR WITHIN 10FT. OF THE TRAFFIC LANE	10 MPH
HEAD-TO-HEAD ON MULTILANE	10 MPH
SPECIAL CIRCUMSTANCES WITHIN A TEMPORARY TRAFFIC CONTROL WORK ZONE MAY WARRANT A LOWER SPEED LIMIT THAN RECOMMENDED ABOVE. ALL SPEED LIMIT REDUCTIONS GREATER THAN 10 MPH SHALL BE DOCUMENTED, SUBMITTED TO AND APPROVED BY THE DISTRICT WORK ZONE COORDINATOR.	

GENERAL NOTES:

1. SEE STANDARD PLAN 616.10 FOR DETAILS AND ITEMS NOT SHOWN
2. EXISTING SIGNS SHALL BE COVERED DURING WORKING HOURS ONLY IF IN CONFLICT WITH TRAFFIC CONTROL PLANS.
3. NO DIRECT PAYMENT WILL BE MADE FOR RELOCATING, COVERING, UNCOVERING OR REMOVING SIGNS.
4. CONES ALLOWABLE FOR DAYTIME OPERATIONS ONLY.
5. LOCATE FLASHING ARROW PANEL AT BEGINNING OF TAPER WHEN FEASIBLE, ARROW PANELS ARE ALWAYS LOCATED BEHIND CHANNELIZERS OR CONES.

TAPER LENGTHS AND END TREATMENTS FOR CONCRETE BARRIER				
SPEED (P) MPH	MINIMUM TAPER LENGTHS FOR LANE WIDTHS (3)			END TREATMENT (4)
	10 FT	11 FT	12 FT	
<40	160 FT	168 FT	176 FT	BARRIER HEIGHT TRANSITION
≥40	160 FT	168 FT	176 FT	APPROVED CRASH CUSHION

DEVICE SPACING TEMPORARY TRAFFIC CONTROL SHEET 1 OF 52

"THIS MEDIA SHOULD NOT BE CONSIDERED A CERTIFIED DOCUMENT."

DATE PREPARED 12/15/2013

ROUTE VAR. STATE MO

DISTRICT KC SHEET NO. 10

COUNTY JACKSON

JOB NO. J4P2191

CONTRACT ID.

PROJECT NO.

BRIDGE NO. VARIOUS

DESCRIPTION

DATE

MISSOURI HIGHWAYS AND TRANSPORTATION COMMISSION

105 WEST CAPITOL
JEFFERSON CITY, MO 65102
1-888-ASK-MODOT (1-888-275-6636)

IF A SEAL IS PRESENT ON THIS SHEET IT HAS BEEN ELECTRONICALLY SEALED AND DATED.

REV.

EFFECTIVE: 02-01-2009

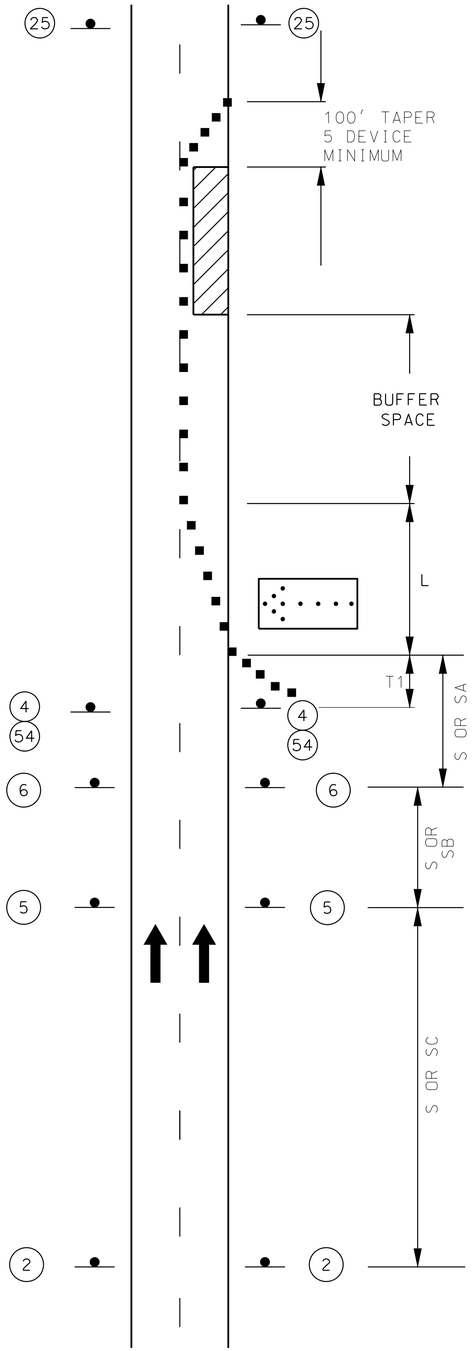

TWO-LANE DIVIDED HIGHWAY

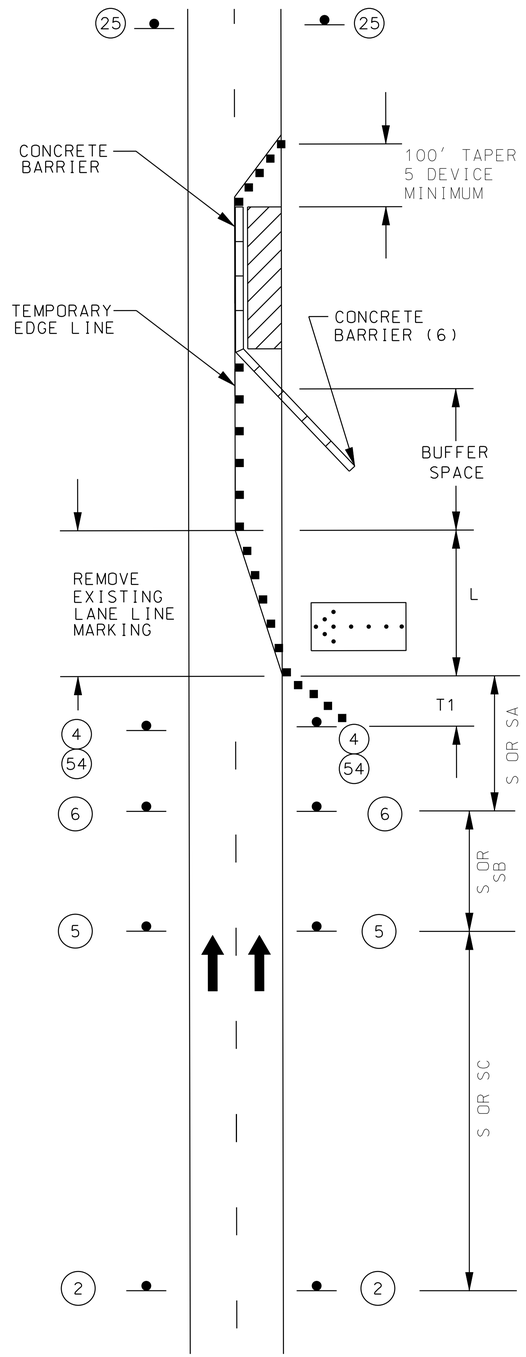

TWO-LANE DIVIDED HIGHWAY
WITH BARRIER

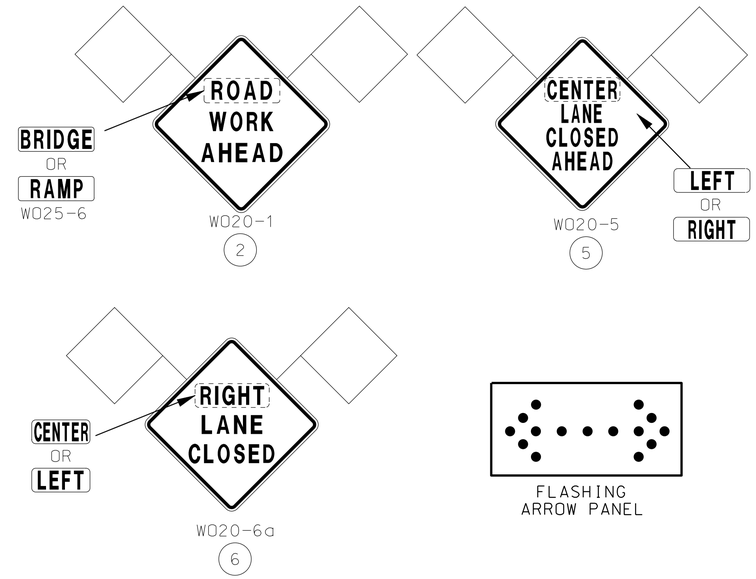

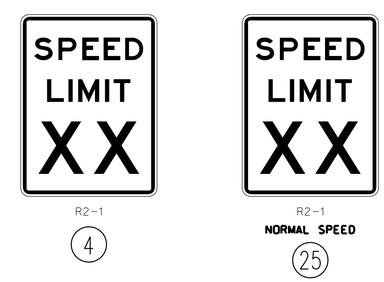

NOTES:

(1). SEE TRAFFIC CONTROL SHEET 1 FOR WORK ZONE SPEED LIMIT GUIDELINES.

(2). SEE TRAFFIC CONTROL SHEET 1 FOR SIGN SPACING, DEVICE SPACING AND CHANNELIZING TAPER LENGTHS.

(3). SEE SHEET FIGURE 616.0.5, SHEET 2 OF 2, FOR A LANE CLOSURE WITH WIDTH RESTRICTION.

(4). REMOVE AND/OR MODIFY ANY EXISTING PAVEMENT MARKING AS NEEDED.

(5). TEMPORARY PAVEMENT MARKING REQUIRED WITH LONG TERM CLOSURES.

(6). FLARE BARRIER TO EXTEND BEYOND CLEAR ZONE OR FLARE BARRIER TO EDGE LINE AND USE APPROVED END TREATMENT.

LANE CLOSURE
TEMPORARY
TRAFFIC CONTROL
SHEET 2 OF 52

"THIS MEDIA SHOULD NOT BE CONSIDERED A CERTIFIED DOCUMENT."

DATE PREPARED	12/15/2013
ROUTE	VAR.
STATE	MO
DISTRICT	KC
SHEET NO.	11
COUNTY	JACKSON
JOB NO.	J4P2191
CONTRACT ID.	
PROJECT NO.	
BRIDGE NO.	VARIOUS

DESCRIPTION	DATE

MISSOURI HIGHWAYS AND TRANSPORTATION COMMISSION

105 WEST CAPITOL
JEFFERSON CITY, MO 65102
1-888-ASK-MODOT (1-888-275-6636)

IF A SEAL IS PRESENT ON THIS SHEET IT HAS BEEN ELECTRONICALLY SEALED AND DATED.

REV.

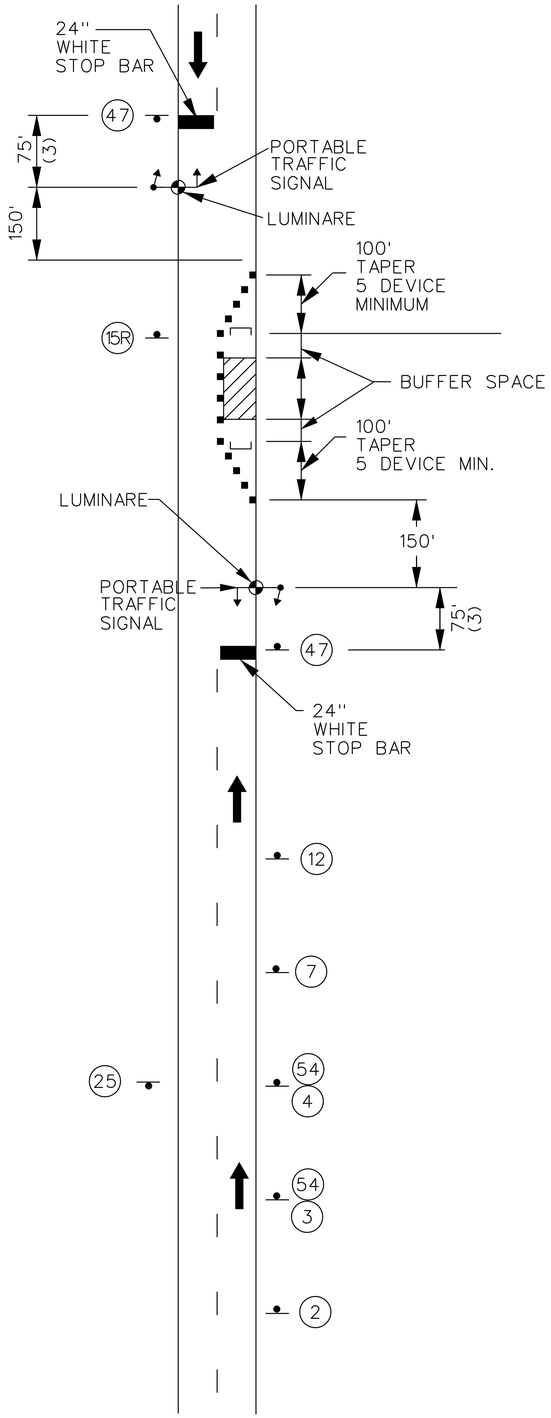

PORTABLE TRAFFIC SIGNALS (2)

W020-1
2

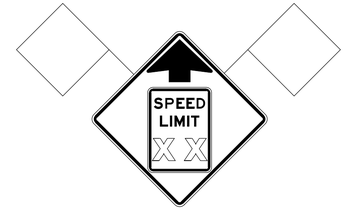

W3-5
03

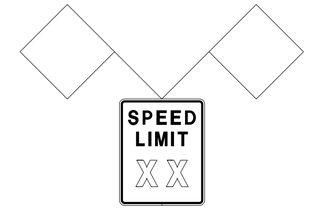

R2-1
04

W020-4
7

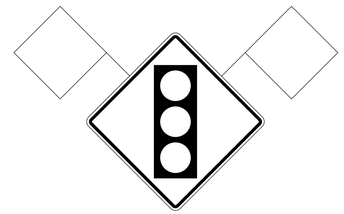

W03-3
12

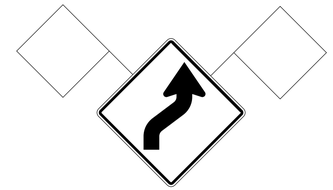

W01-4R
15

R10-6
47

G020-5aP
54

■ ■ ■ ■ - CHANNELIZERS

SIGNAL CONTROL NOTES
ONE-LANE TWO-WAY OPERATION

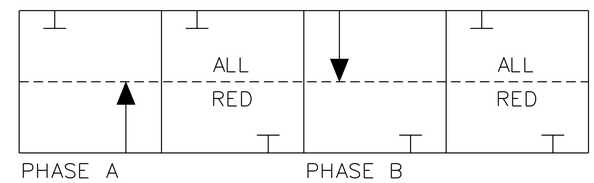

PHASE A AND PHASE B SHALL ALWAYS BE FOLLOWED BY AN ALL RED PHASE OR INTERVAL.

SIGNALS SHALL REST IN ALL RED WHEN THERE ARE NO VEHICLE CALLS

TYPICAL ACTUATED PHASING (5)

NOTES:

(1). SEE TRAFFIC CONTROL SHEET 1 FOR SIGN SPACING, DEVICE SPACING AND CHANNELIZING TAPER LENGTHS.

(2). SIGNING AND PAVEMENT MARKING IDENTICAL ON BOTH APPROACHES.

(3). 75' RECOMMENDED SPACING. SPACING MAY BE BETWEEN 40' AND 150'.

(4). NON-INTRUSIVE DETECTION IS PREFERRED. HOWEVER, IF OTHER VECHICLE INTERFERENCE IS PRESENT (I.E. PARKING LOTS OR SIDE ROAD ACTIVITY), THEN OTHER DETECTION METHODS MAY BE USED.

(5). IF SIDE ROADS OR DRIVEWAYS OCCUR WITHIN THE LIMITS OF THE STOP BARS, ADDITIONAL INDICATIONS AND PHASING ARE REQUIRED. FUTHERMAORE, RIGHT TURNS SHALL BE PROHIBITED FROM THESE ACCESS POINTS DURING THE RED INTERVAL.

TO BE USED FOR
BRIDGE A42961
SIGNAL CONTROL
LANE CLOSURE
TEMPORARY
TRAFFIC CONTROL
SHEET 3 OF 52

"THIS MEDIA SHOULD NOT BE CONSIDERED A CERTIFIED DOCUMENT."

DATE PREPARED	12/15/2013
ROUTE	VAR.
STATE	MO
DISTRICT	KC
SHEET NO.	12
COUNTY	JACKSON
JOB NO.	J4P2191
CONTRACT ID.	
PROJECT NO.	
BRIDGE NO.	A42961

DESCRIPTION

DATE

MISSOURI HIGHWAYS AND TRANSPORTATION COMMISSION

105 WEST CAPITOL
JEFFERSON CITY, MO 65102
1-888-ASK-MODOT (1-888-275-6636)

IF A SEAL IS PRESENT ON THIS SHEET IT HAS BEEN ELECTRONICALLY SEALED AND DATED.

REV.

EXACT LOCATION SHALL BE DETERMINED
BY THE ENGINEER AND CONTRACTOR TO
COORDINATE WITH CONSTRUCTION ACTIVITIES

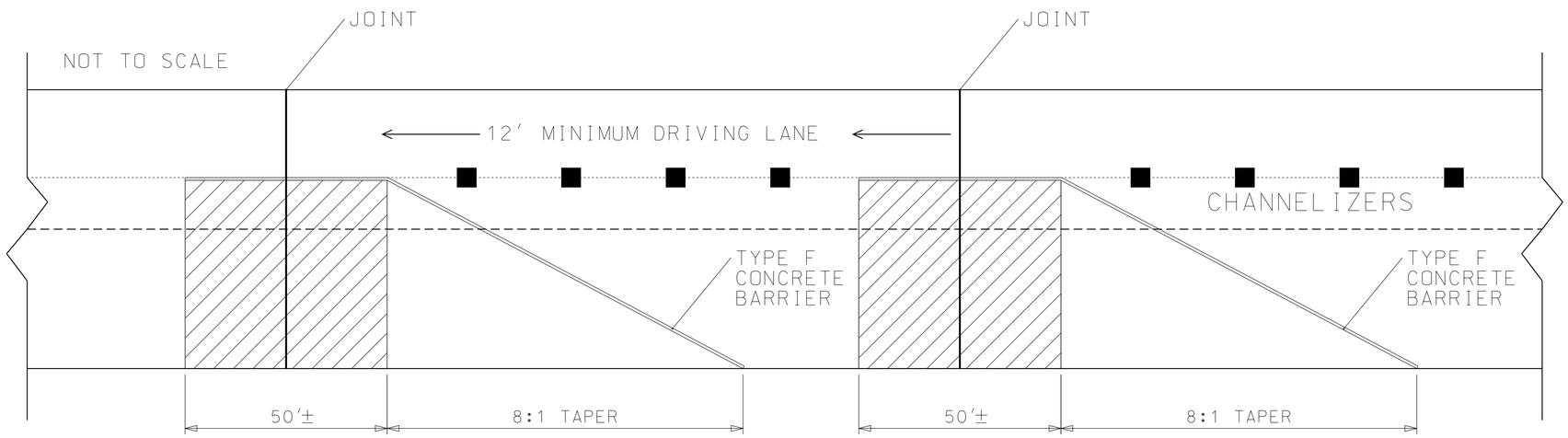

TEMPORARY TRAFFIC BARRIER DETAIL

BARRIER DETAIL
TRAFFIC CONTROL SHEET
SHEET 4 OF 52

"THIS MEDIA SHOULD NOT BE CONSIDERED A CERTIFIED DOCUMENT."

DATE PREPARED	12/15/2013
ROUTE	VAR.
STATE	MO
DISTRICT	KC
SHEET NO.	13
COUNTY	JACKSON
JOB NO.	J4P2191
CONTRACT ID.	
PROJECT NO.	
BRIDGE NO.	VARIOUS

DATE	DESCRIPTION

MISSOURI HIGHWAYS AND TRANSPORTATION COMMISSION

105 WEST CAPITOL
JEFFERSON CITY, MO 65102
1-888-ASK-MODOT (1-888-275-6636)

IF A SEAL IS PRESENT ON THIS SHEET IT HAS BEEN ELECTRONICALLY SEALED AND DATED.

REV.

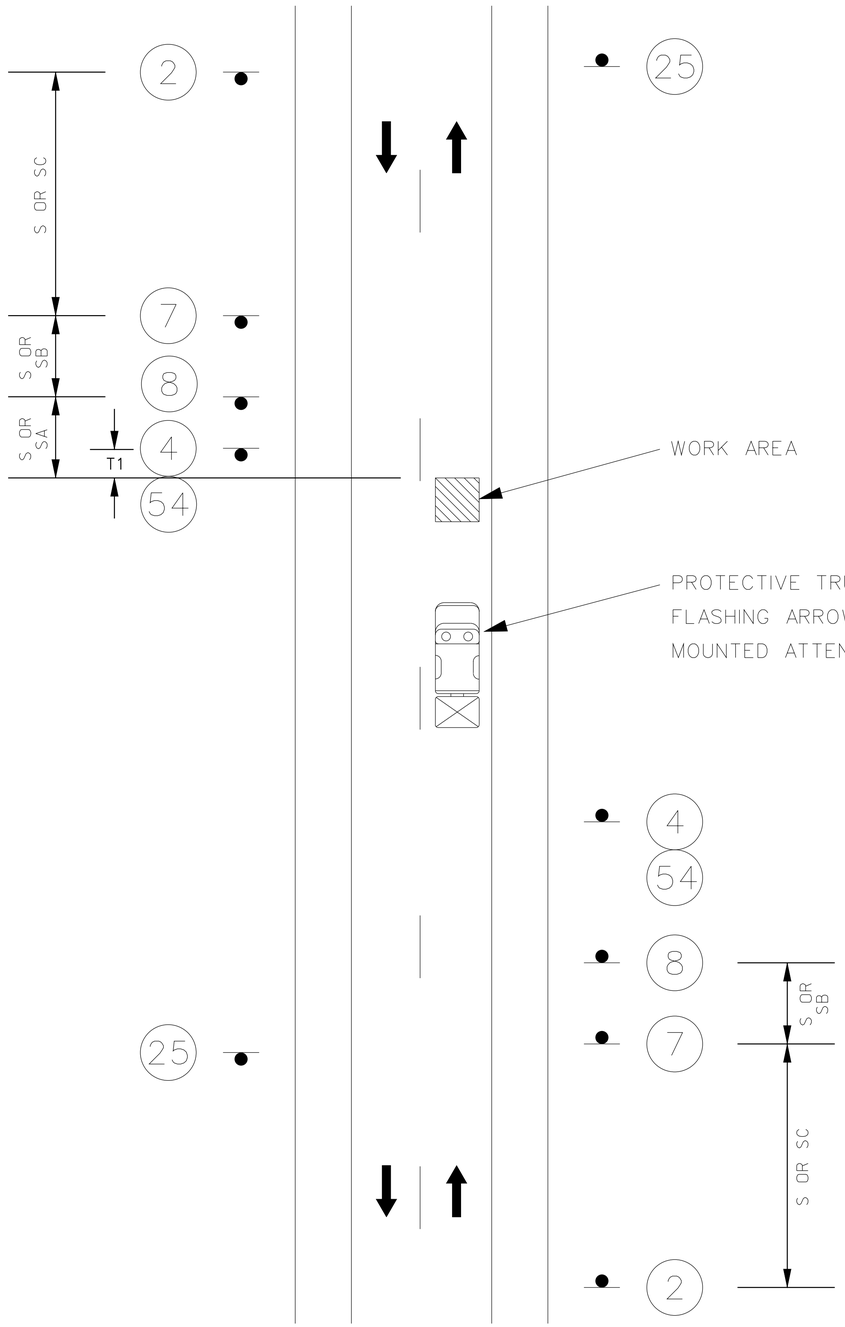

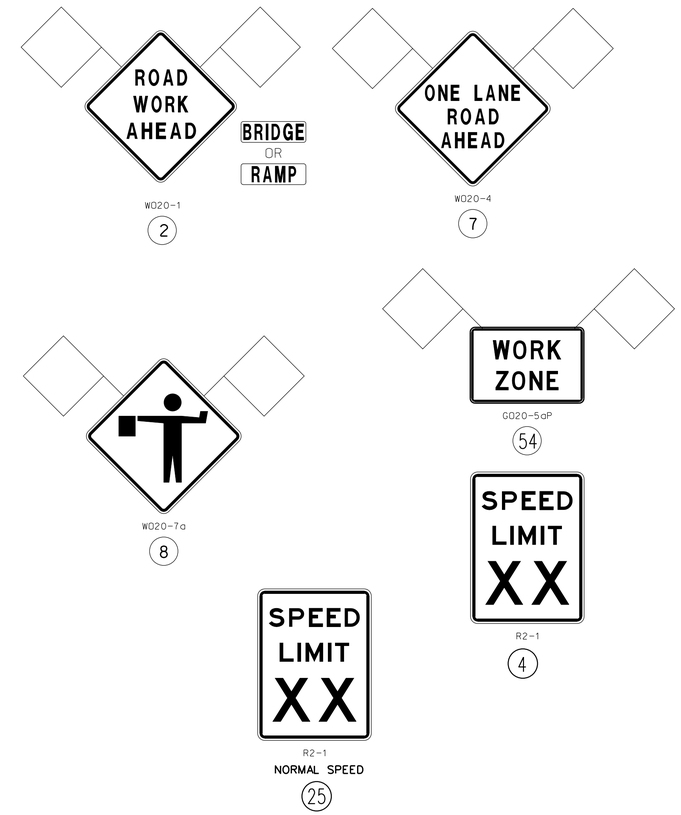

NOTES:

SEE TRAFFIC CONTROL SHEET 1 FOR WORK ZONE SPEED LIMIT GUIDELINES.

SEE TRAFFIC CONTROL SHEET 1 FOR SIGN SPACING, DEVICE SPACING AND CHANNELIZING TAPER LENGTHS.

FLASHING ARROW PANELS SHALL BE OPERATED IN CAUTION MODE.

UPON APPROVAL OF THE ENGINEER, THE CONTRACTOR MAY PROVIDE ADDITIONAL PROTECTIVE TRUCKS EQUIPPED WITH PROPER WARNING DEVICES.

THE FLAGGER POSITION SHOULD BE LOCATED WHERE THEY WILL PROVIDE THE MOST VALUE TO THE MOTORIST AND THE WORK CREW.

FOR SHORT DISTANCE LANE CLOSURES, ONE FLAGGER MAY BE SUFFICIENT IF THERE IS ADEQUATE SIGHT DISTANCE FOR THE PROPER HANDLING OF TRAFFIC.

TWO-LANE UNDIVIDED HIGHWAY
MOVING OPERATION ON HIGHWAY OPEN TO TRAFFIC

MOVING OPERATION
OPEN TO TRAFFIC
TEMPORARY
TRAFFIC CONTROL
SHEET 5 OF 52

"THIS MEDIA SHOULD NOT BE CONSIDERED A CERTIFIED DOCUMENT."

DATE PREPARED	12/15/2013
ROUTE	VAR.
STATE	MO
DISTRICT	KC
SHEET NO.	14
COUNTY	JACKSON
JOB NO.	J4P2191
CONTRACT ID.	
PROJECT NO.	
BRIDGE NO.	

DATE	DESCRIPTION

MISSOURI HIGHWAYS AND TRANSPORTATION COMMISSION
105 WEST CAPITOL
JEFFERSON CITY, MO 65102
1-888-ASK-MODOT (1-888-275-6636)

IF A SEAL IS PRESENT ON THIS SHEET IT HAS BEEN ELECTRONICALLY SEALED AND DATED.

REV.

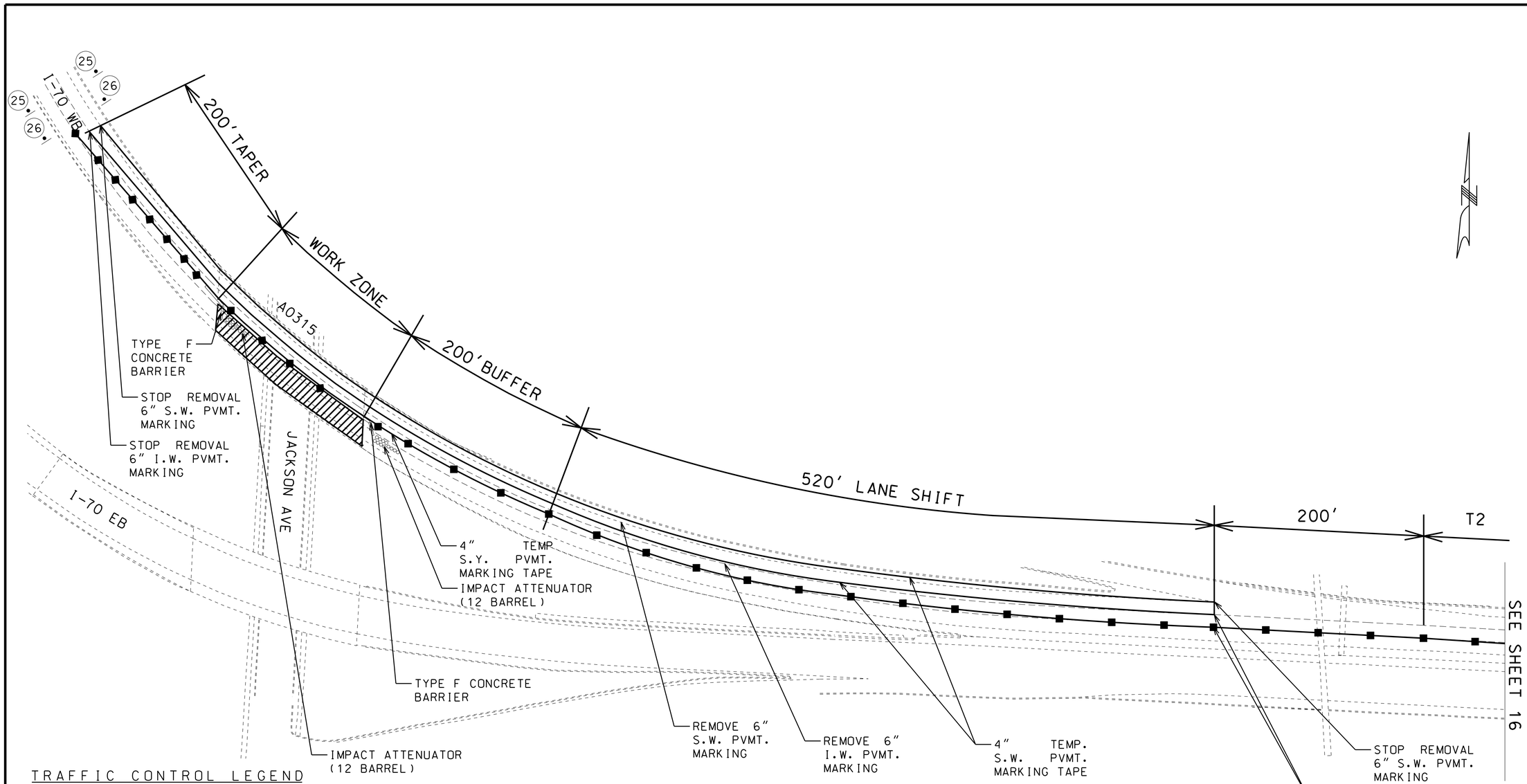

TRAFFIC CONTROL LEGEND

- SIGN (SINGLE SIDED)
- SIGN (DOUBLE SIDED)
- FLAGGER
- CONE
- CHANNELIZER
- BARRICADE
- CHANGEABLE MESSAGE BOARD
- WORK ZONE

NOT TO SCALE

NOTE: TAPER CHANNELIZERS SHALL HAVE LIGHTS

NOTE: TAPER CHANNELIZERS SHALL HAVE LIGHTS

NOTE: TAPER CHANNELIZERS SHALL HAVE LIGHTS

A03154
I-70 WB OVER JACKSON AVE
TRAFFIC CONTROL SHEET
PHASE 1
SHEET 6 OF 52

"THIS MEDIA SHOULD NOT BE CONSIDERED A CERTIFIED DOCUMENT."

DATE PREPARED	12/15/2013
ROUTE	VAR.
STATE	MO
DISTRICT	KC
SHEET NO.	15
COUNTY	JACKSON
JOB NO.	J4P2191
CONTRACT ID.	
PROJECT NO.	
BRIDGE NO.	A03154

DESCRIPTION	DATE

MISSOURI HIGHWAYS AND TRANSPORTATION COMMISSION
105 WEST CAPITOL
JEFFERSON CITY, MO 65102
1-888-ASK-MODOT (1-888-275-6636)

IF A SEAL IS PRESENT ON THIS SHEET IT HAS BEEN ELECTRONICALLY SEALED AND DATED.

REV.

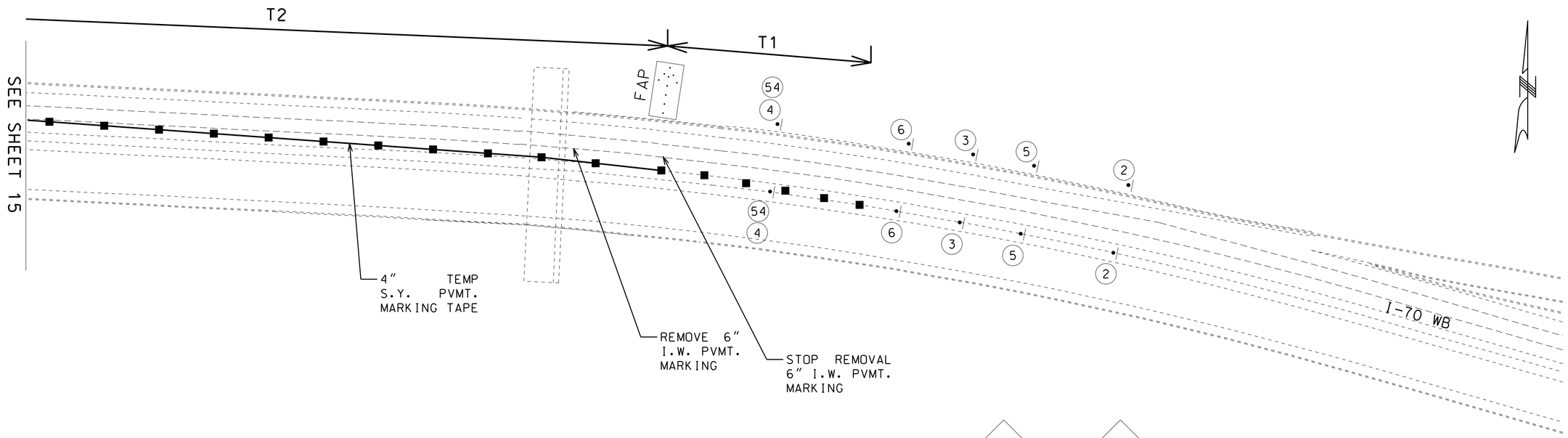

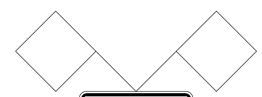

TRAFFIC CONTROL LEGEND

- SIGN (SINGLE SIDED)
- SIGN (DOUBLE SIDED)
- FLAGGER
- CONE
- CHANNELIZER
- BARRICADE
- CHANGEABLE MESSAGE BOARD

NOT TO SCALE

NOTE: REFER TO TRAFFIC CONTROL SHEET 1 OF 52 FOR SIGN SPACING
NOTE: TAPER CHANNELIZERS SHALL HAVE LIGHTS

A03154
I-70 WB OVER JACKSON AVE
TRAFFIC CONTROL SHEET
PHASE 1
SHEET 7 OF 52

"THIS MEDIA SHOULD NOT BE CONSIDERED A CERTIFIED DOCUMENT."

DATE PREPARED	
12/15/2013	
ROUTE: VAR.	STATE: MO
DISTRICT: KC	SHEET NO.: 16
COUNTY: JACKSON	
JOB NO.: J4P2191	
CONTRACT ID.	
PROJECT NO.	
BRIDGE NO.: A03154	

DATE	DESCRIPTION

MISSOURI HIGHWAYS AND TRANSPORTATION COMMISSION
105 WEST CAPITOL
JEFFERSON CITY, MO 65102
1-888-ASK-MODOT (1-888-275-6636)

IF A SEAL IS PRESENT ON THIS SHEET IT HAS BEEN ELECTRONICALLY SEALED AND DATED.

REV.

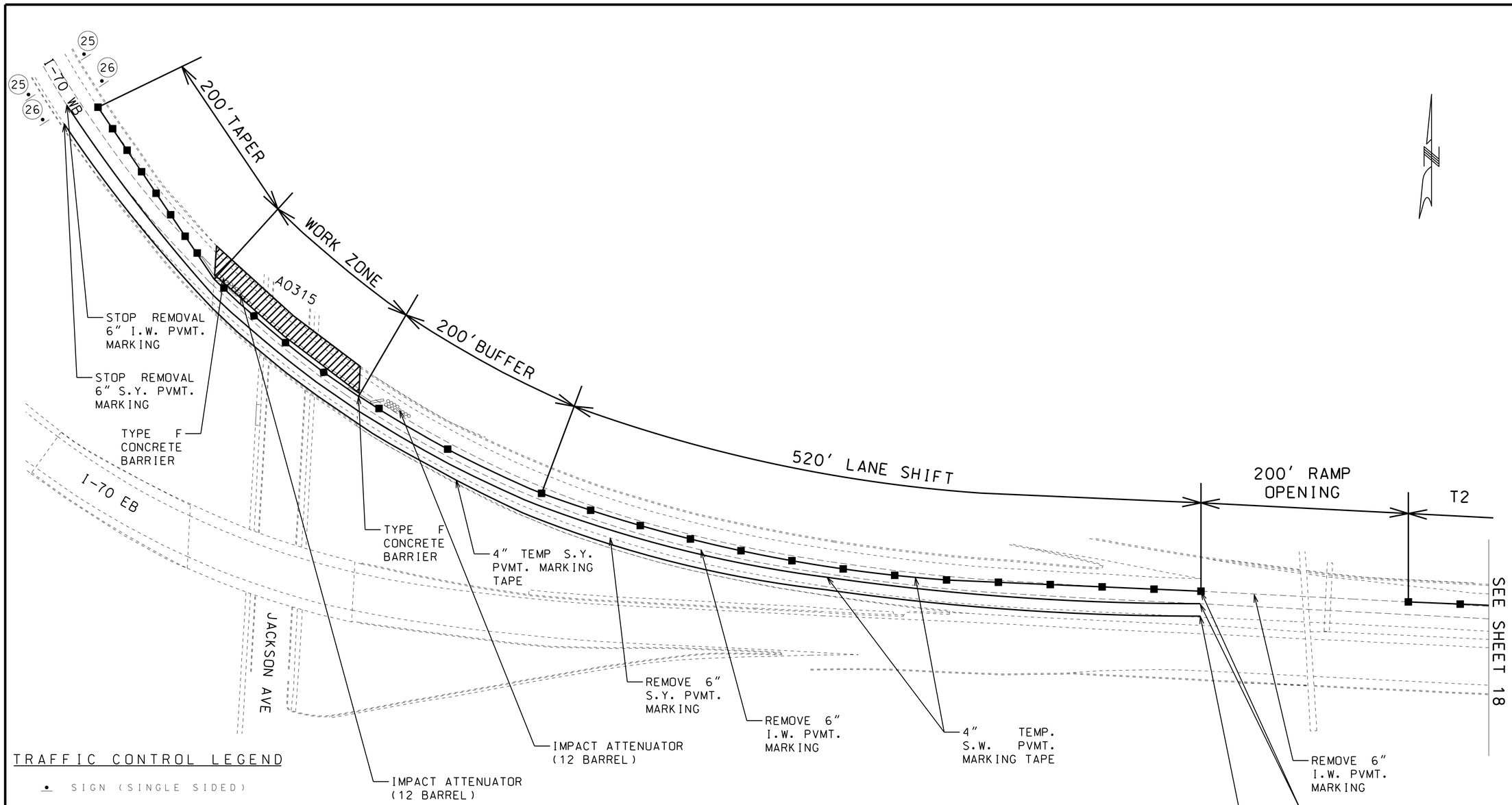

END ROAD WORK
G020-2
26

SPEED LIMIT 55
R2-1
25

TRAFFIC CONTROL LEGEND

- SIGN (SINGLE SIDED)
- SIGN (DOUBLE SIDED)
- FLAGGER
- CONE
- CHANNELIZER
- BARRICADE
- CHANGEABLE MESSAGE BOARD
- WORK ZONE

NOT TO SCALE

NOTE: TAPER CHANNELIZERS SHALL HAVE LIGHTS

A03154
I-70 WB OVER JACKSON AVE
TRAFFIC CONTROL SHEET
PHASE 3
SHEET 8 OF 52

"THIS MEDIA SHOULD NOT BE CONSIDERED A CERTIFIED DOCUMENT."

DATE PREPARED	12/15/2013
ROUTE	VAR.
STATE	MO
DISTRICT	KC
SHEET NO.	17
COUNTY	JACKSON
JOB NO.	J4P2191
CONTRACT ID.	
PROJECT NO.	
BRIDGE NO.	A03154

DESCRIPTION

DATE

MISSOURI HIGHWAYS AND TRANSPORTATION COMMISSION

105 WEST CAPITOL
JEFFERSON CITY, MO 65102
1-888-ASK-MODOT (1-888-275-6636)

IF A SEAL IS PRESENT ON THIS SHEET IT HAS BEEN ELECTRONICALLY SEALED AND DATED.

REV.

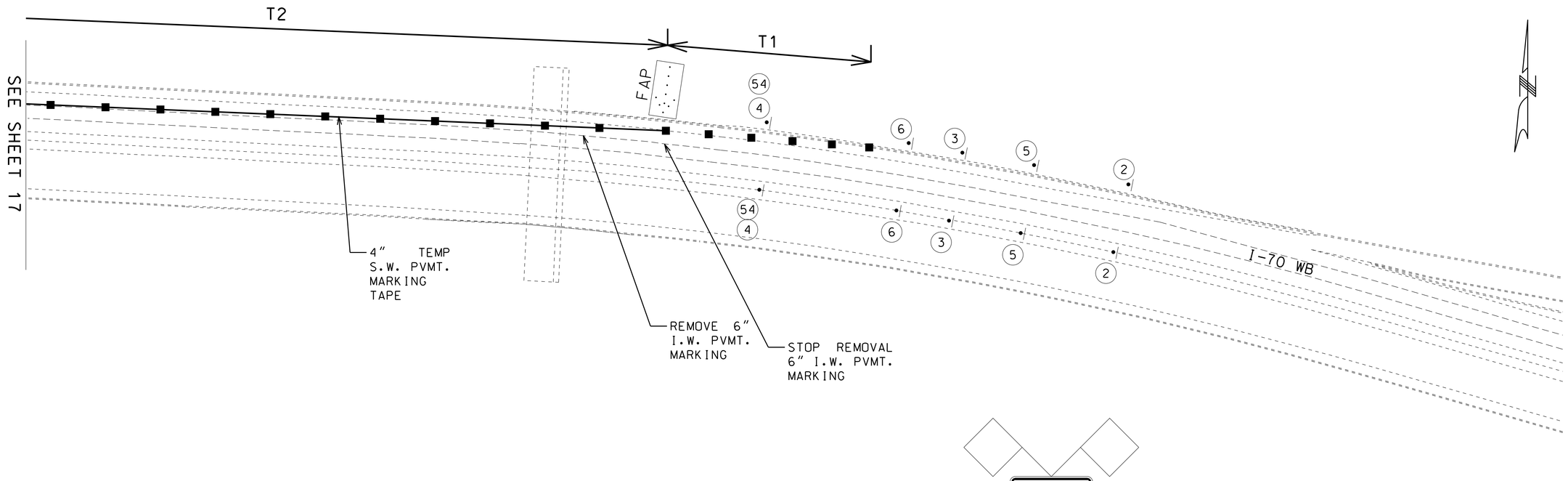

TRAFFIC CONTROL LEGEND

- SIGN (SINGLE SIDED)
- SIGN (DOUBLE SIDED)
- FLAGGER
- CONE
- CHANNELIZER
- BARRICADE
- CHANGEABLE MESSAGE BOARD

NOT TO SCALE

NOTE: TAPER CHANNELIZERS SHALL HAVE LIGHTS
NOTE: REFER TO TRAFFIC CONTROL SHEET 1 OF 52 FOR SIGN SPACING

A03154
I-70 WB OVER JACKSON AVE
TRAFFIC CONTROL SHEET
PHASE 3
SHEET 9 OF 52

"THIS MEDIA SHOULD NOT BE CONSIDERED A CERTIFIED DOCUMENT."

DATE PREPARED	
12/15/2013	
ROUTE	STATE
VAR.	MO
DISTRICT	SHEET NO.
KC	18
COUNTY	
JACKSON	
JOB NO.	
J4P2191	
CONTRACT ID.	
PROJECT NO.	
BRIDGE NO.	
A03154	

DESCRIPTION	DATE

MISSOURI HIGHWAYS AND TRANSPORTATION COMMISSION
105 WEST CAPITOL
JEFFERSON CITY, MO 65102
1-888-ASK-MODOT (1-888-275-6636)

IF A SEAL IS PRESENT ON THIS SHEET IT HAS BEEN ELECTRONICALLY SEALED AND DATED.

REV.

NOTE: CONTRACTOR SHALL COVER NECESSARY SIGN FOR TRAFFIC PHASING
NOTE: REFER TO TRAFFIC CONTROL SHEET 1 OF 52 FOR SIGN SPACING

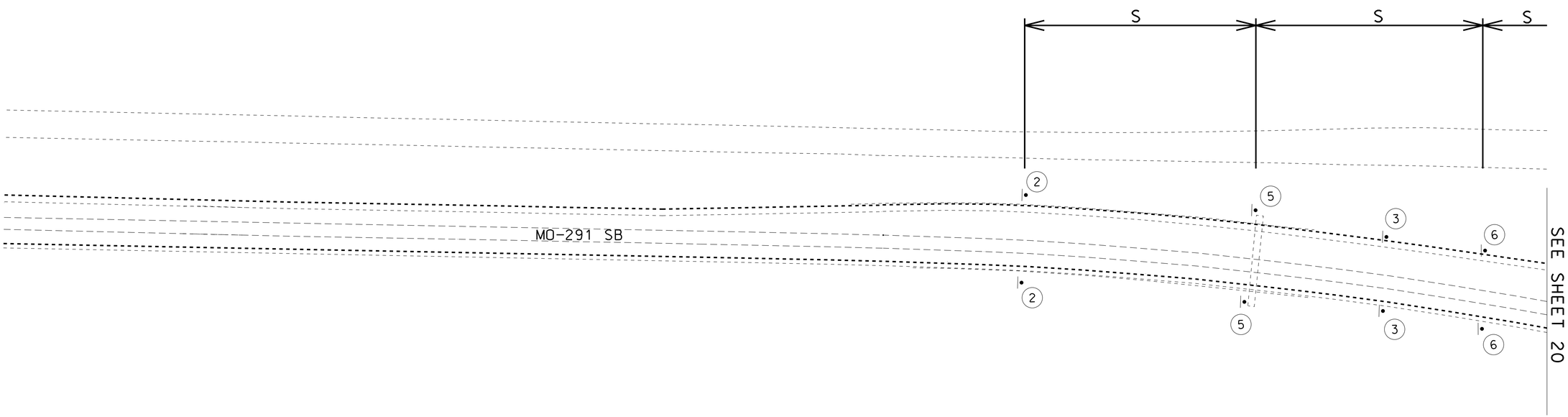

TRAFFIC CONTROL LEGEND

- SIGN (SINGLE SIDED)
- SIGN (DOUBLE SIDED)
- FLAGGER
- CONE
- CHANNELIZER
- BARRICADE
- CHANGEABLE MESSAGE BOARD

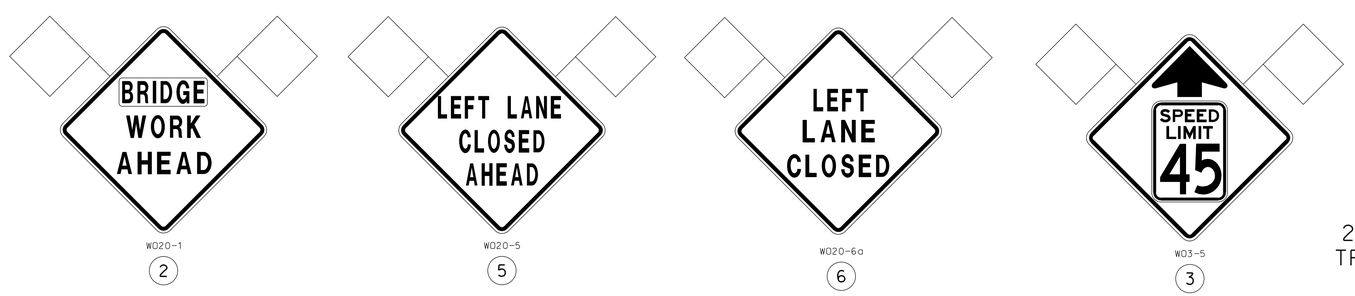

NOT TO SCALE

A21201
291 SB OVER I-470 NB
TRAFFIC CONTROL SHEET
PHASE 1
SHEET 10 OF 52

"THIS MEDIA SHOULD NOT BE CONSIDERED A CERTIFIED DOCUMENT."

DATE PREPARED	12/15/2013
ROUTE	VAR.
STATE	MO
DISTRICT	KC
SHEET NO.	19
COUNTY	JACKSON
JOB NO.	J4P2191
CONTRACT ID.	
PROJECT NO.	
BRIDGE NO.	A21201

DATE	DESCRIPTION

MISSOURI HIGHWAYS AND TRANSPORTATION COMMISSION
105 WEST CAPITOL
JEFFERSON CITY, MO 65102
1-888-ASK-MODOT (1-888-275-6636)

IF A SEAL IS PRESENT ON THIS SHEET IT HAS BEEN ELECTRONICALLY SEALED AND DATED.

REV.

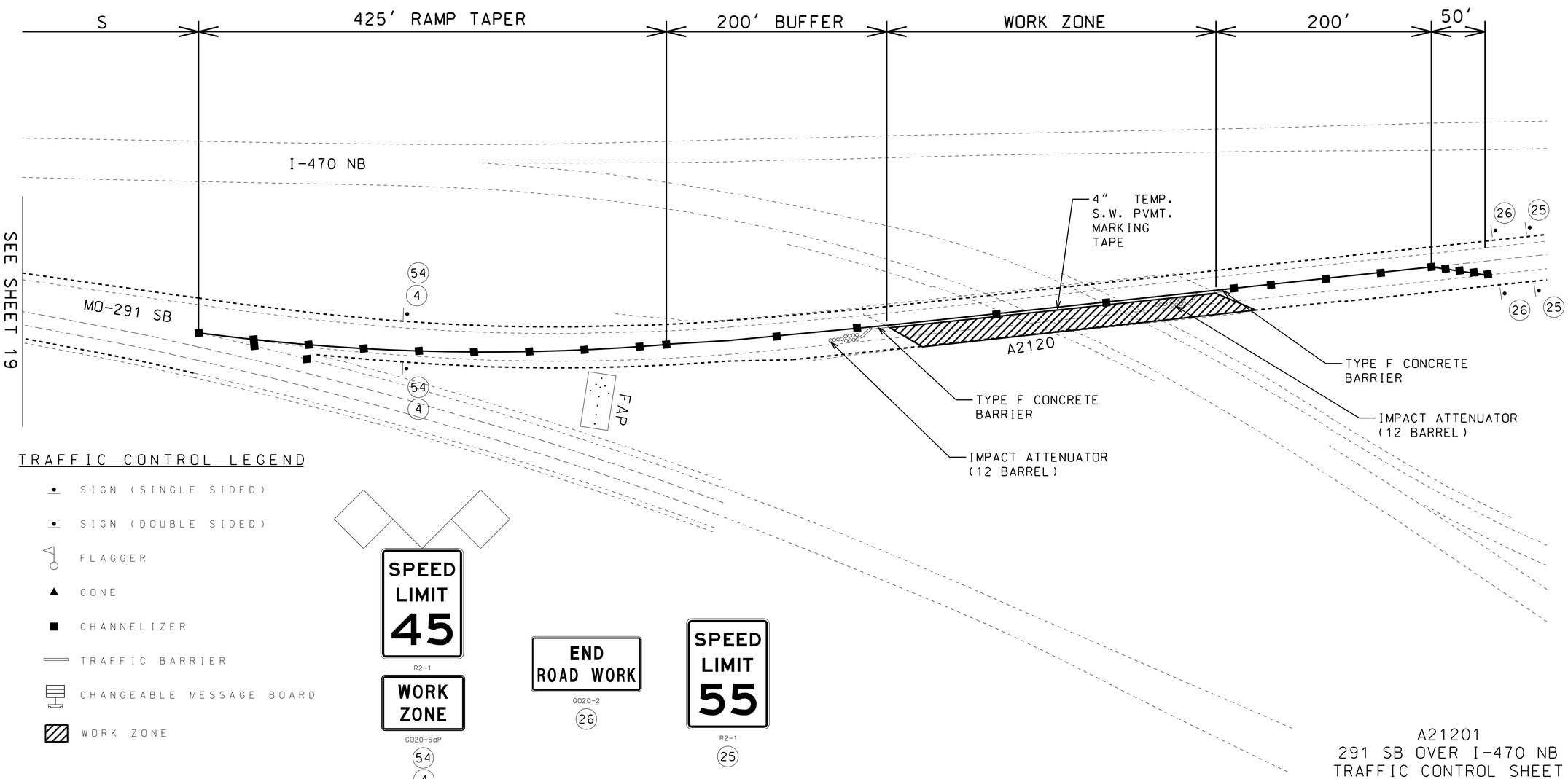

TRAFFIC CONTROL LEGEND

- SIGN (SINGLE SIDED)
- SIGN (DOUBLE SIDED)
- FLAGGER
- CONE
- CHANNELIZER
- TRAFFIC BARRIER
- CHANGEABLE MESSAGE BOARD
- WORK ZONE

NOT TO SCALE

NOTE: TAPER CHANNELIZERS SHALL HAVE LIGHTS

A21201
291 SB OVER I-470 NB
TRAFFIC CONTROL SHEET
PHASE 1
SHEET 11 OF 52

"THIS MEDIA SHOULD NOT BE CONSIDERED A CERTIFIED DOCUMENT."

DATE PREPARED	12/15/2013
ROUTE	VAR.
STATE	MO
DISTRICT	KC
SHEET NO.	20
COUNTY	JACKSON
JOB NO.	J4P2191
CONTRACT ID.	
PROJECT NO.	
BRIDGE NO.	A21201

DESCRIPTION	DATE

MISSOURI HIGHWAYS AND TRANSPORTATION COMMISSION

105 WEST CAPITOL
JEFFERSON CITY, MO 65102
1-888-ASK-MODOT (1-888-275-6636)

IF A SEAL IS PRESENT ON THIS SHEET IT HAS BEEN ELECTRONICALLY SEALED AND DATED.

REV.

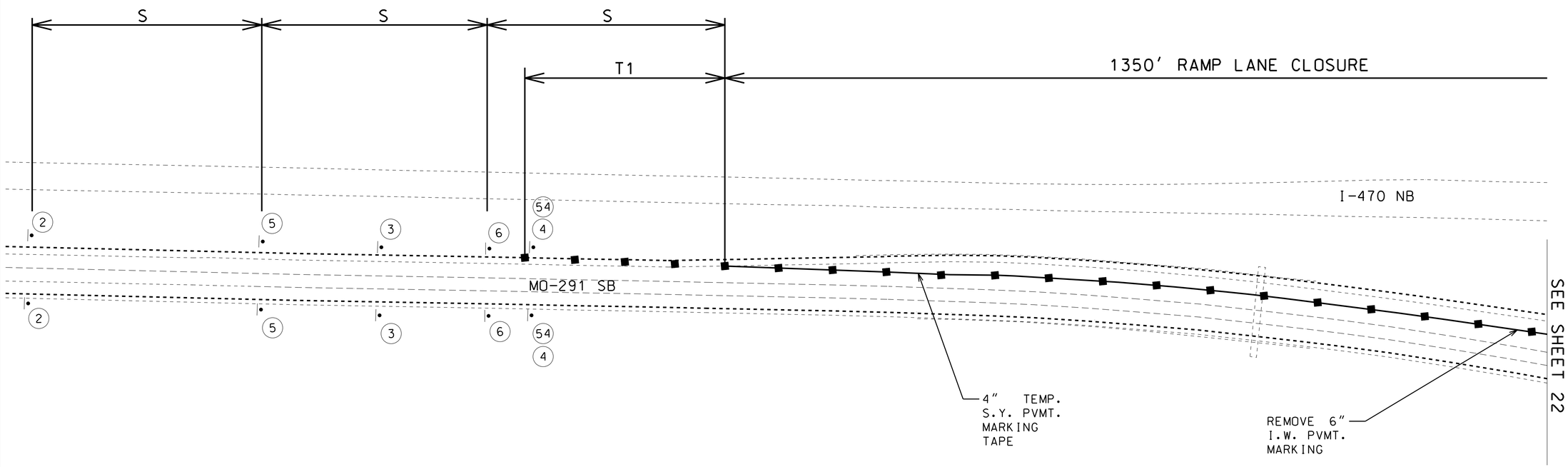

NOTE: TAPER CHANNELIZERS SHALL HAVE LIGHTS

NOTE: CONTRACTOR SHALL COVER NECESSARY TRAFFIC SIGN FOR PHASING

TRAFFIC CONTROL LEGEND

- SIGN (SINGLE SIDED)
- SIGN (DOUBLE SIDED)
- FLAGGER
- CONE
- CHANNELIZER
- BARRICADE
- CHANGEABLE MESSAGE BOARD

W020-1
2

W020-5
5

W020-6a
6

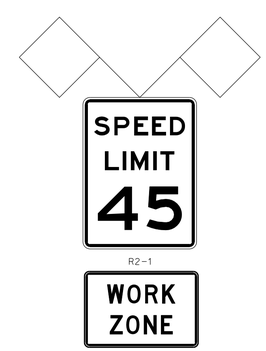

R2-1

G020-5aP
54
4

W03-5
3

NOT TO SCALE

A21201
291 SB OVER I-470 NB
TRAFFIC CONTROL SHEET
PHASE 2
SHEET 12 OF 52

"THIS MEDIA SHOULD NOT BE CONSIDERED A CERTIFIED DOCUMENT."

DATE PREPARED	12/15/2013
ROUTE	VAR.
STATE	MO
DISTRICT	KC
SHEET NO.	21
COUNTY	JACKSON
JOB NO.	J4P2191
CONTRACT ID.	
PROJECT NO.	
BRIDGE NO.	A21201

DESCRIPTION

DATE

MISSOURI HIGHWAYS AND TRANSPORTATION COMMISSION

105 WEST CAPITOL
JEFFERSON CITY, MO 65102
1-888-ASK-MODOT (1-888-275-6636)

IF A SEAL IS PRESENT ON THIS SHEET IT HAS BEEN ELECTRONICALLY SEALED AND DATED.

REV.

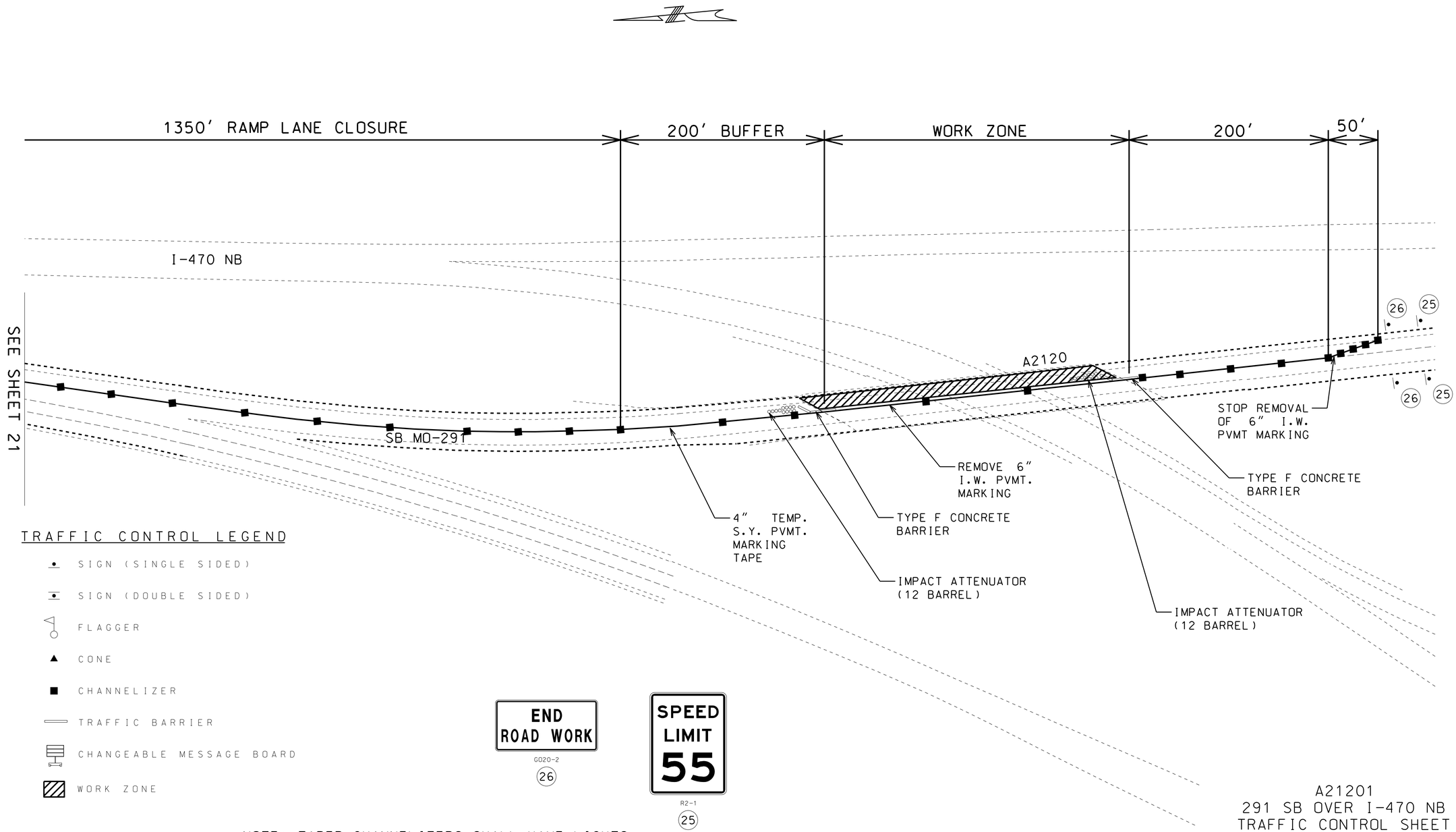

TRAFFIC CONTROL LEGEND

- SIGN (SINGLE SIDED)
- SIGN (DOUBLE SIDED)
- FLAGGER
- CONE
- CHANNELIZER
- TRAFFIC BARRIER
- CHANGEABLE MESSAGE BOARD
- WORK ZONE

END ROAD WORK
G020-2
26

SPEED LIMIT 55
R2-1
25

NOT TO SCALE

NOTE: TAPER CHANNELIZERS SHALL HAVE LIGHTS

A21201
291 SB OVER I-470 NB
TRAFFIC CONTROL SHEET
PHASE 2
SHEET 13 OF 52

"THIS MEDIA SHOULD NOT BE CONSIDERED A CERTIFIED DOCUMENT."

DATE PREPARED	
12/15/2013	
ROUTE	STATE
VAR.	MO
DISTRICT	SHEET NO.
KC	22
COUNTY	
JACKSON	
JOB NO.	
J4P2191	
CONTRACT ID.	
PROJECT NO.	
BRIDGE NO.	
A21201	

DESCRIPTION	DATE

MISSOURI HIGHWAYS AND TRANSPORTATION COMMISSION
105 WEST CAPITOL
JEFFERSON CITY, MO 65102
1-888-ASK-MODOT (1-888-275-6636)

IF A SEAL IS PRESENT ON THIS SHEET IT HAS BEEN ELECTRONICALLY SEALED AND DATED.

REV.

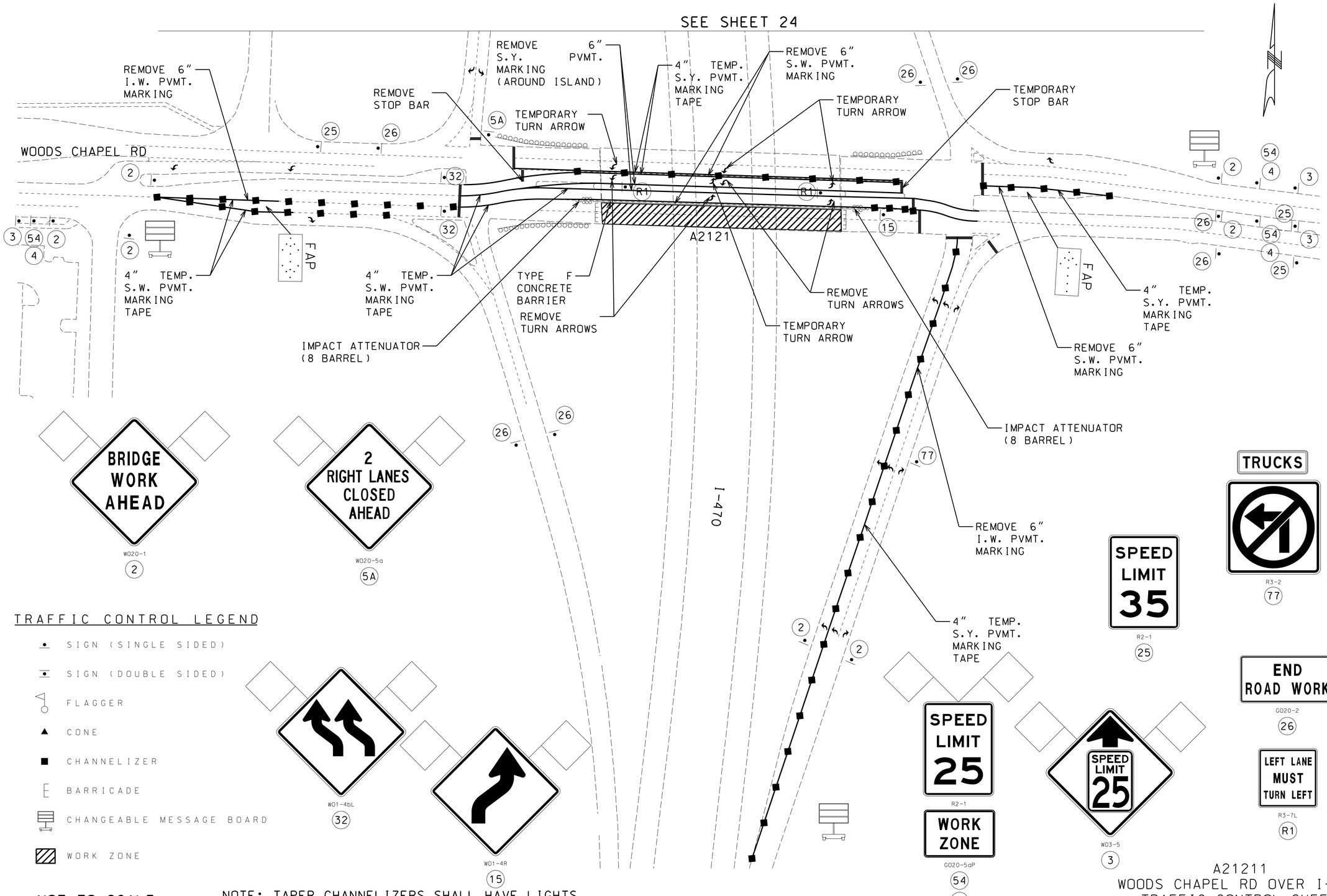

NOT TO SCALE

NOTE: TAPER CHANNELIZERS SHALL HAVE LIGHTS
NOTE: CONTRACTOR IS RESPONSIBLE FOR ROTATING AND COVERING NECESSARY SIGNAL HEADS FOR TRAFFIC PHASING
NOTE: REFER TO TRAFFIC CONTROL SHEET 1 OF 52 FOR SIGN SPACING

A21211
WOODS CHAPEL RD OVER I-470
TRAFFIC CONTROL SHEET
PHASE 1
SHEET 14 OF 52

"THIS MEDIA SHOULD NOT BE CONSIDERED A CERTIFIED DOCUMENT."

DATE PREPARED	
12/16/2013	
ROUTE: VAR.	STATE: MO
DISTRICT: KC	SHEET NO.: 23
COUNTY: JACKSON	
JOB NO.: J4P2191	
CONTRACT ID.	
PROJECT NO.	
BRIDGE NO.: A21211	

DATE	DESCRIPTION

MISSOURI HIGHWAYS AND TRANSPORTATION COMMISSION
105 WEST CAPITOL
JEFFERSON CITY, MO 65102
1-888-ASK-MODOT (1-888-275-6636)

IF A SEAL IS PRESENT ON THIS SHEET IT HAS BEEN ELECTRONICALLY SEALED AND DATED.

REV.

W020-1

2

W020-5a

5A

R3-2

77

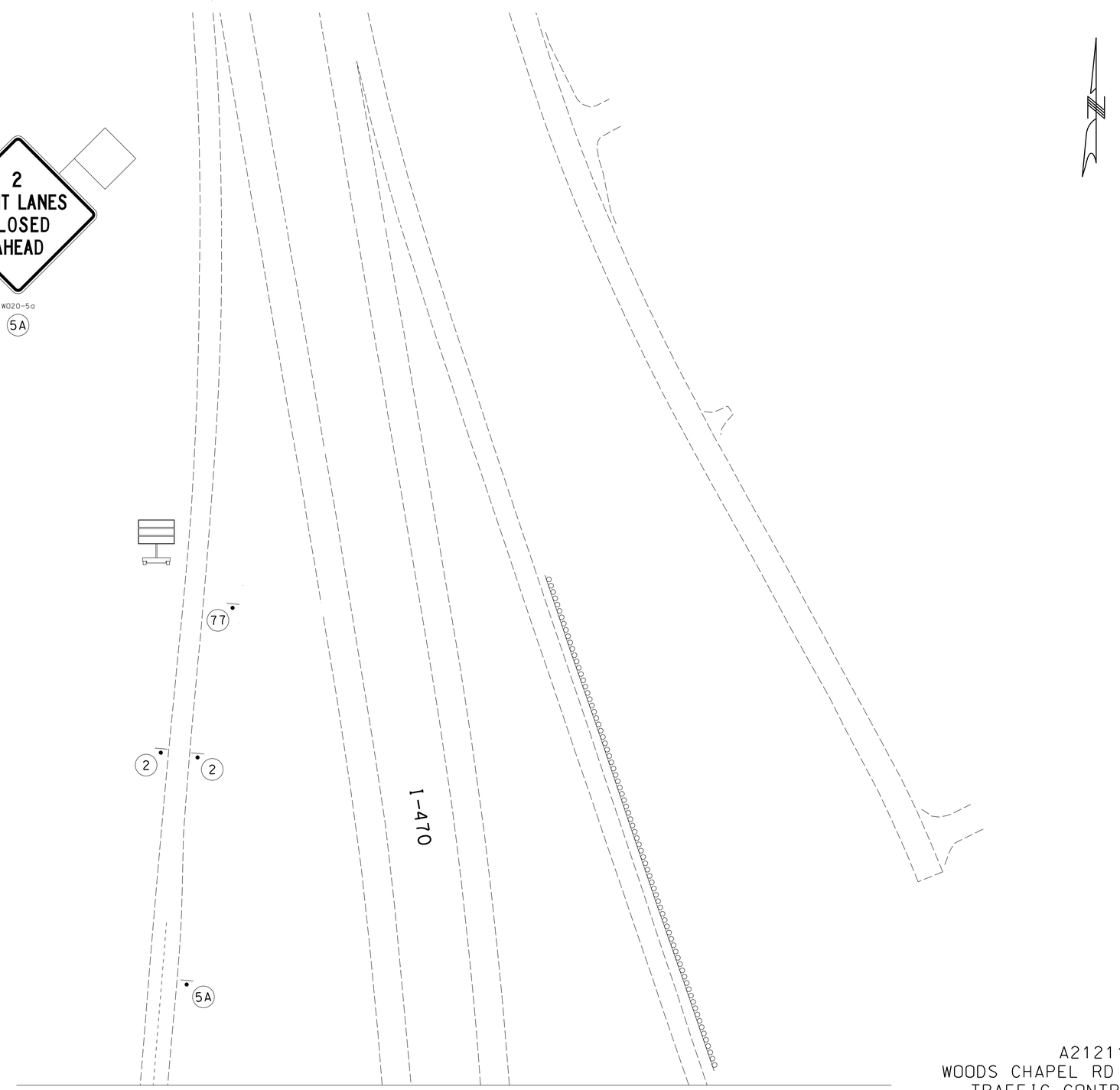

TRAFFIC CONTROL LEGEND

- SIGN (SINGLE SIDED)
- SIGN (DOUBLE SIDED)
- FLAGGER
- CONE
- CHANNELIZER
- BARRICADE
- CHANGEABLE MESSAGE BOARD

NOT TO SCALE

SEE SHEET 23

A21211
WOODS CHAPEL RD OVER I-470
TRAFFIC CONTROL SHEET
PHASE 1
SHEET 15 OF 52

"THIS MEDIA SHOULD NOT BE CONSIDERED A CERTIFIED DOCUMENT."

DATE PREPARED	12/16/2013
ROUTE	VAR.
STATE	MO
DISTRICT	KC
SHEET NO.	24
COUNTY	JACKSON
JOB NO.	J4P2191
CONTRACT ID.	
PROJECT NO.	
BRIDGE NO.	A21211

DATE	DESCRIPTION

MISSOURI HIGHWAYS AND TRANSPORTATION COMMISSION

105 WEST CAPITOL
JEFFERSON CITY, MO 65102
1-888-ASK-MODOT (1-888-275-6636)

IF A SEAL IS PRESENT ON THIS SHEET IT HAS BEEN ELECTRONICALLY SEALED AND DATED.

REV.

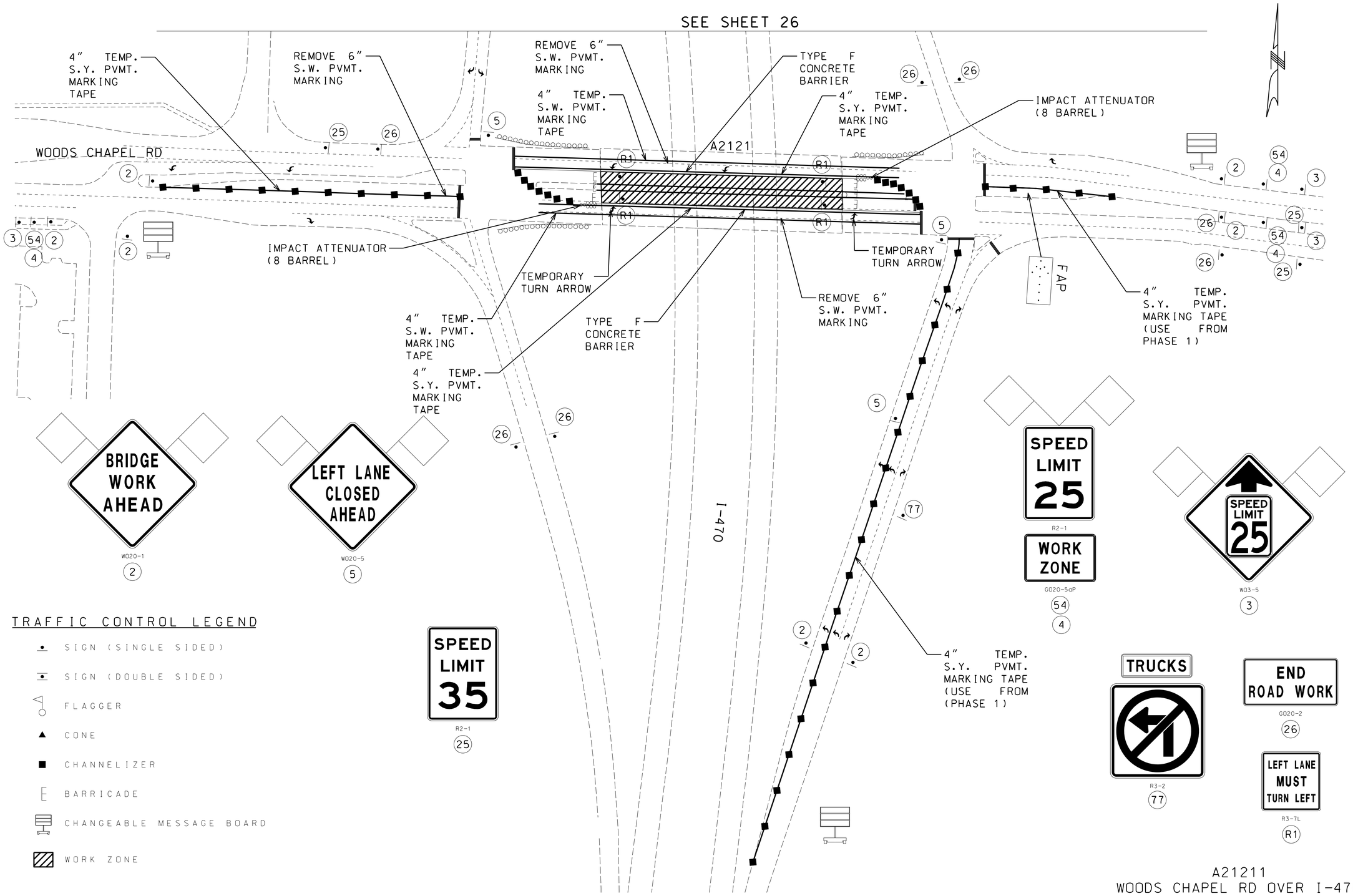

NOT TO SCALE

NOTE: TAPER CHANNELIZERS SHALL HAVE LIGHTS
NOTE: CONTRACTOR IS RESPONSIBLE FOR ROTATING AND COVERING NECESSARY SIGNAL HEADS FOR TRAFFIC PHASING

A21211
WOODS CHAPEL RD OVER I-470
TRAFFIC CONTROL SHEET
PHASE 2
SHEET 16 OF 52

"THIS MEDIA SHOULD NOT BE CONSIDERED A CERTIFIED DOCUMENT."

DATE PREPARED	
12/16/2013	
ROUTE	STATE
VAR.	MO
DISTRICT	SHEET NO.
KC	25
COUNTY	
JACKSON	
JOB NO.	
J4P2191	
CONTRACT ID.	
PROJECT NO.	
BRIDGE NO.	
A21211	

DATE	DESCRIPTION

MISSOURI HIGHWAYS AND TRANSPORTATION COMMISSION
105 WEST CAPITOL
JEFFERSON CITY, MO 65102
1-888-ASK-MODOT (1-888-275-6636)

IF A SEAL IS PRESENT ON THIS SHEET IT HAS BEEN ELECTRONICALLY SEALED AND DATED.

REV.

W020-1

2

W020-5

5

R3-2

77

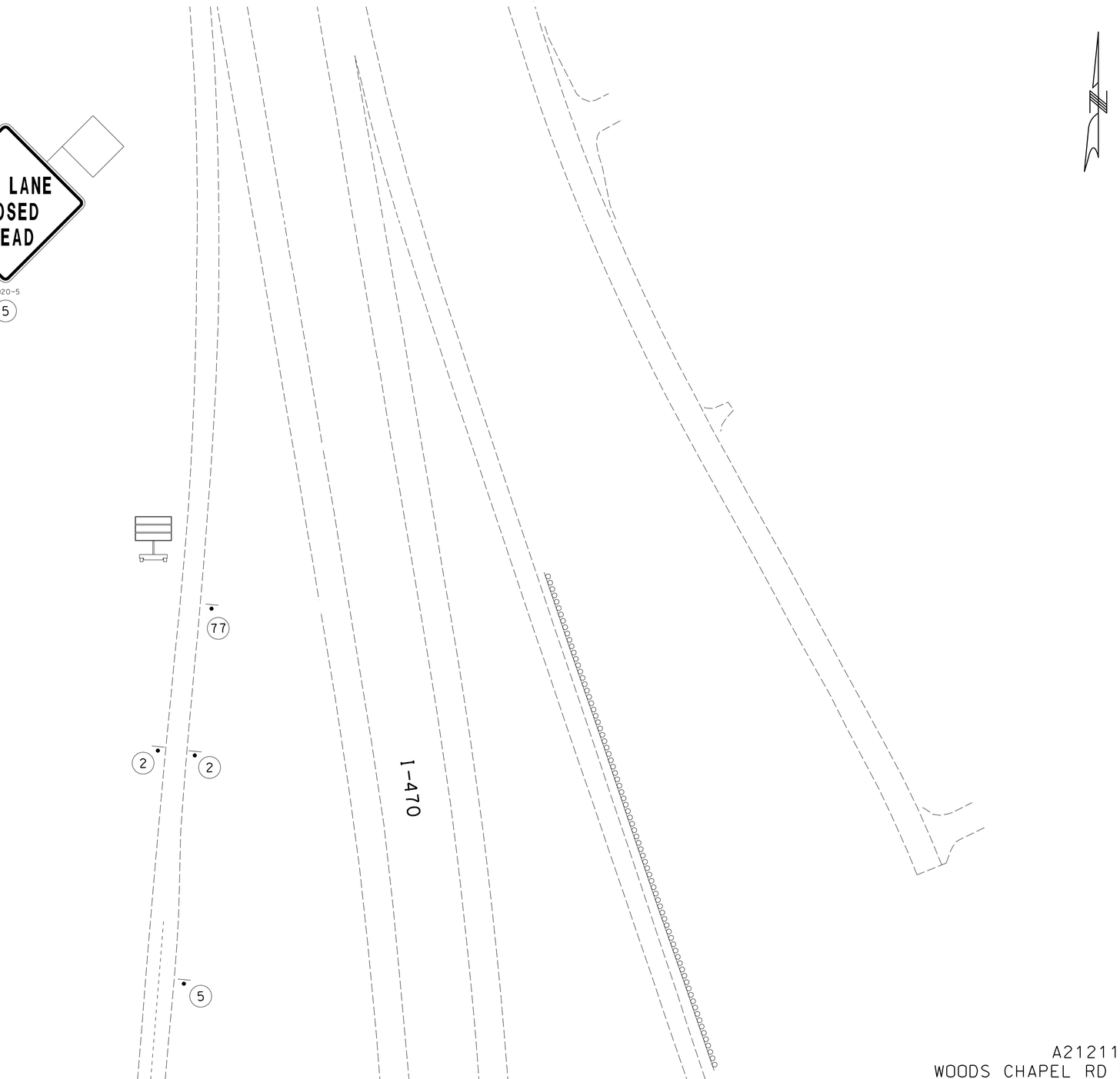

TRAFFIC CONTROL LEGEND

- SIGN (SINGLE SIDED)
- SIGN (DOUBLE SIDED)
- FLAGGER
- CONE
- CHANNELIZER
- BARRICADE
- CHANGEABLE MESSAGE BOARD

NOT TO SCALE

SEE SHEET 25

A21211
WOODS CHAPEL RD OVER I-470
TRAFFIC CONTROL SHEET
PHASE 2
SHEET 17 OF 52

"THIS MEDIA SHOULD NOT BE CONSIDERED A CERTIFIED DOCUMENT."

DATE PREPARED	12/16/2013
ROUTE	VAR.
STATE	MO
DISTRICT	KC
SHEET NO.	26
COUNTY	JACKSON
JOB NO.	J4P2191
CONTRACT ID.	
PROJECT NO.	
BRIDGE NO.	A21211

DATE	DESCRIPTION

MISSOURI HIGHWAYS AND TRANSPORTATION COMMISSION
105 WEST CAPITOL
JEFFERSON CITY, MO 65102
1-888-ASK-MODOT (1-888-275-6636)

IF A SEAL IS PRESENT ON THIS SHEET IT HAS BEEN ELECTRONICALLY SEALED AND DATED.

REV.

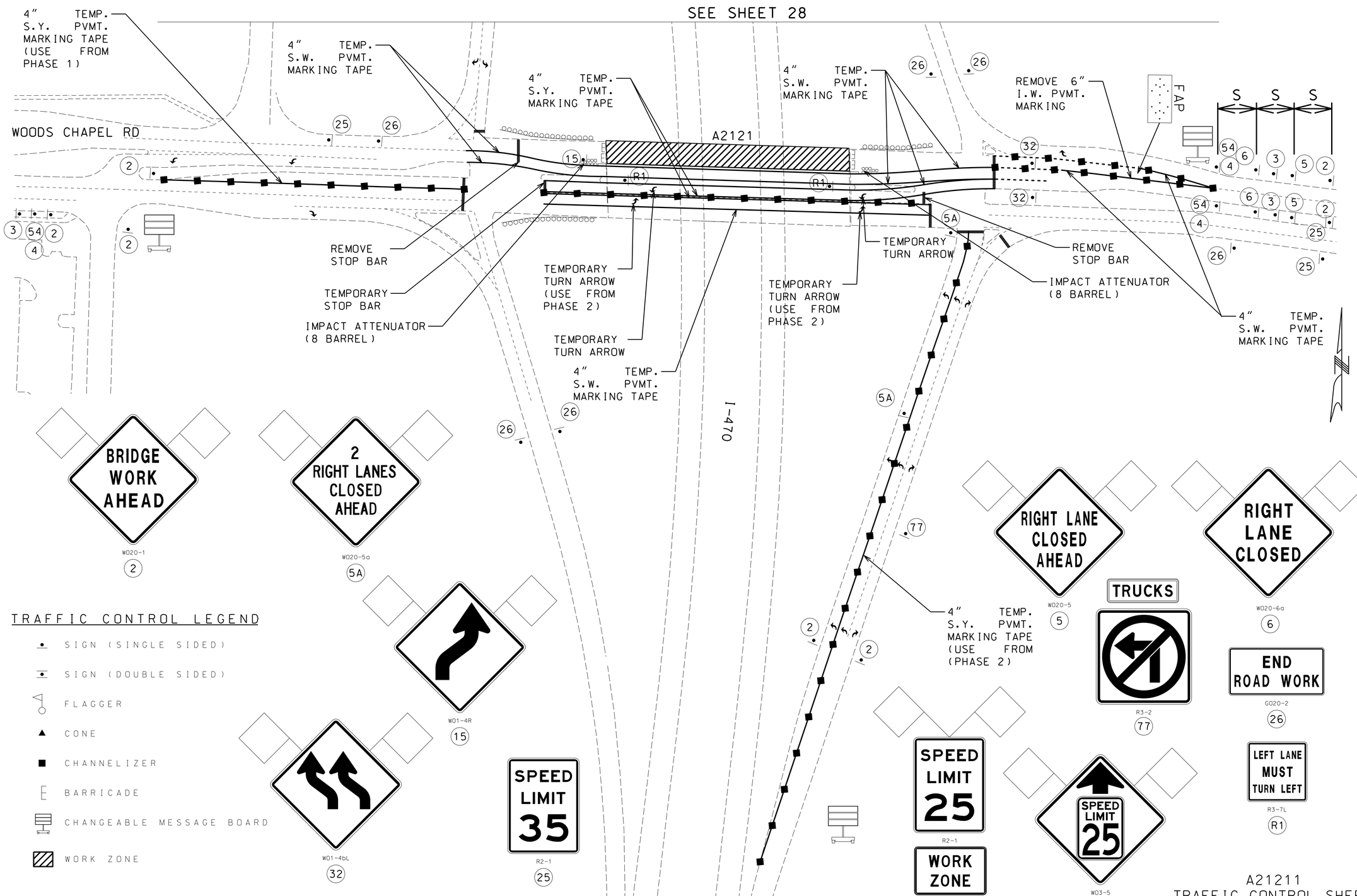

TRAFFIC CONTROL LEGEND

- SIGN (SINGLE SIDED)
- SIGN (DOUBLE SIDED)
- FLAGGER
- CONE
- CHANNELIZER
- BARRICADE
- CHANGEABLE MESSAGE BOARD
- WORK ZONE

NOT TO SCALE

NOTE: TAPER CHANNELIZERS SHALL HAVE LIGHTS
NOTE: REFER TO TRAFFIC CONTROL SHEET 1 OF 52 FOR SIGN SPACING
NOTE: CONTRACTOR IS RESPONSIBLE FOR ROTATING AND COVERING NECESSARY SIGNAL HEADS FOR TRAFFIC PHASING

A21211
TRAFFIC CONTROL SHEET
PHASE 3
SHEET 18 OF 52

"THIS MEDIA SHOULD NOT BE CONSIDERED A CERTIFIED DOCUMENT."

DATE PREPARED	
12/16/2013	
ROUTE	STATE
VAR.	MO
DISTRICT	SHEET NO.
KC	27
COUNTY	
JACKSON	
JOB NO.	
J4P2191	
CONTRACT ID.	
PROJECT NO.	
BRIDGE NO.	
A21211	

DATE	DESCRIPTION

MISSOURI HIGHWAYS AND TRANSPORTATION COMMISSION
105 WEST CAPITOL
JEFFERSON CITY, MO 65102
1-888-ASK-MODOT (1-888-275-6636)

IF A SEAL IS PRESENT ON THIS SHEET IT HAS BEEN ELECTRONICALLY SEALED AND DATED.

REV.

W020-1

2

R3-2

77

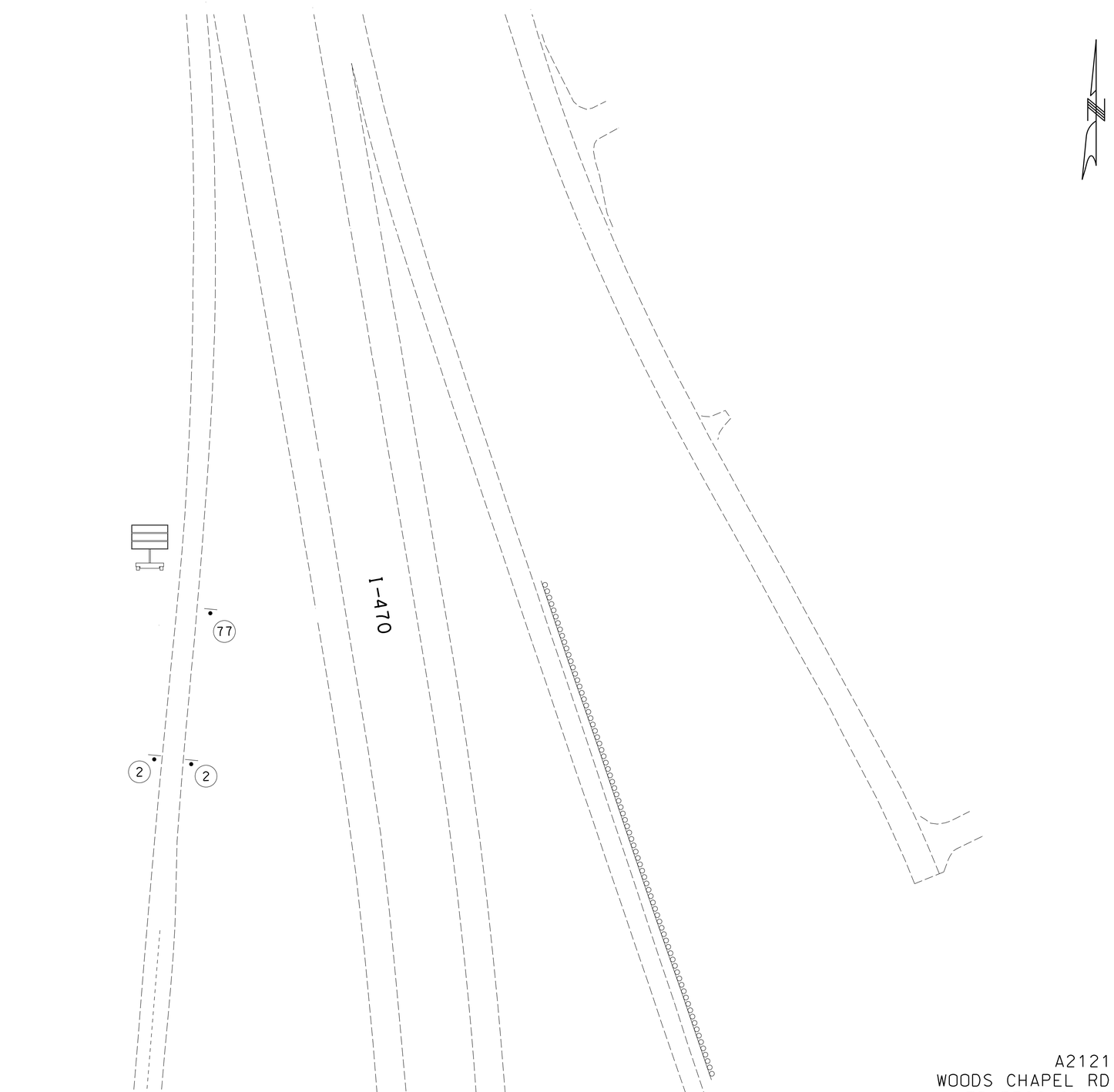

TRAFFIC CONTROL LEGEND

- SIGN (SINGLE SIDED)
- SIGN (DOUBLE SIDED)
- FLAGGER
- CONE
- CHANNELIZER
- BARRICADE
- CHANGEABLE MESSAGE BOARD

NOT TO SCALE

SEE SHEET 27

A21211
WOODS CHAPEL RD OVER I-470
TRAFFIC CONTROL SHEET
PHASE 3
SHEET 19 OF 52

"THIS MEDIA SHOULD NOT BE CONSIDERED A CERTIFIED DOCUMENT."

DATE PREPARED	12/16/2013
ROUTE	VAR.
STATE	MO
DISTRICT	KC
SHEET NO.	28
COUNTY	JACKSON
JOB NO.	J4P2191
CONTRACT ID.	
PROJECT NO.	
BRIDGE NO.	A21211

DATE	DESCRIPTION

MISSOURI HIGHWAYS AND TRANSPORTATION COMMISSION

105 WEST CAPITOL
JEFFERSON CITY, MO 65102
1-888-ASK-MODOT (1-888-275-6636)

IF A SEAL IS PRESENT ON THIS SHEET IT HAS BEEN ELECTRONICALLY SEALED AND DATED.

REV.

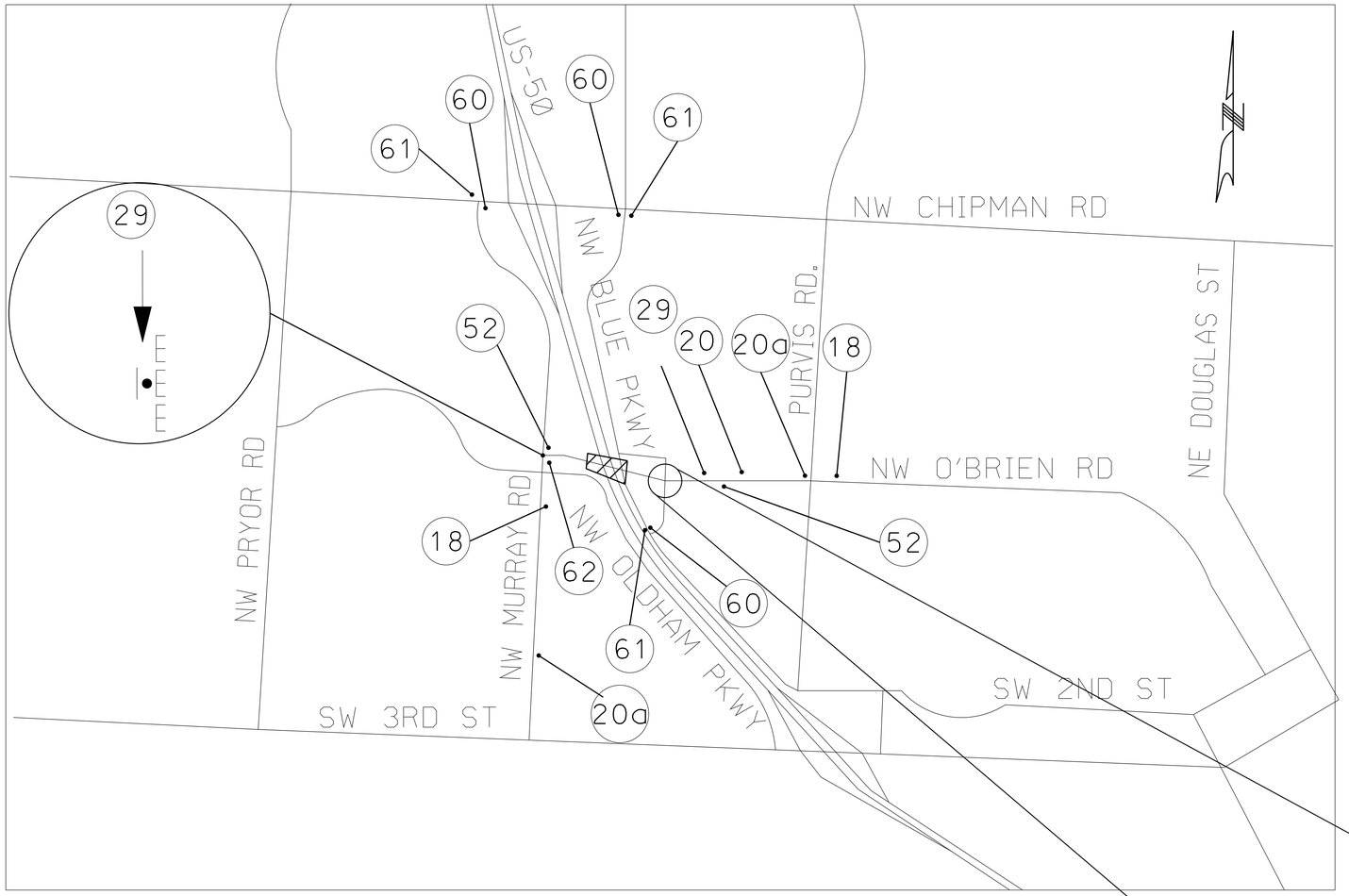

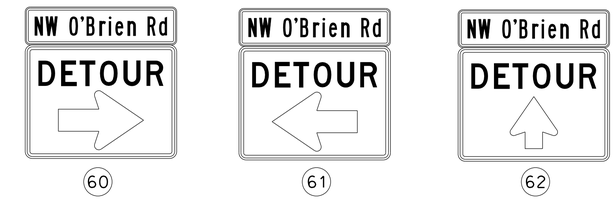

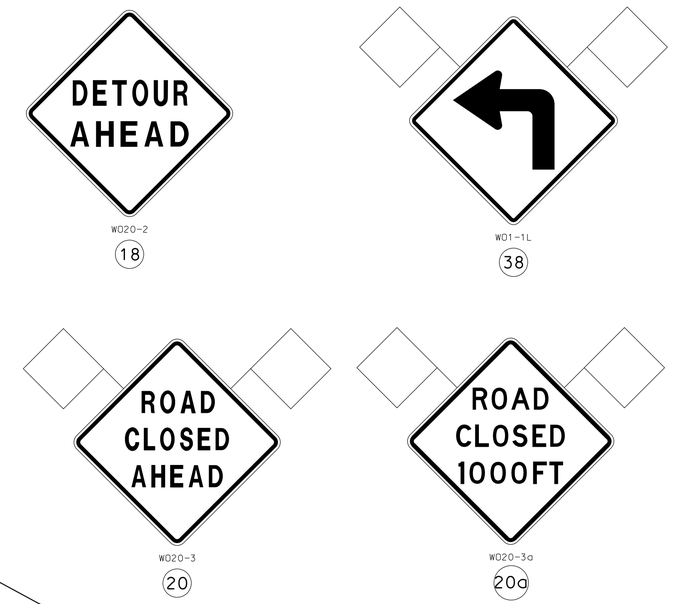

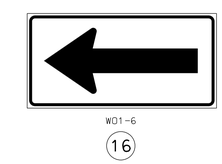

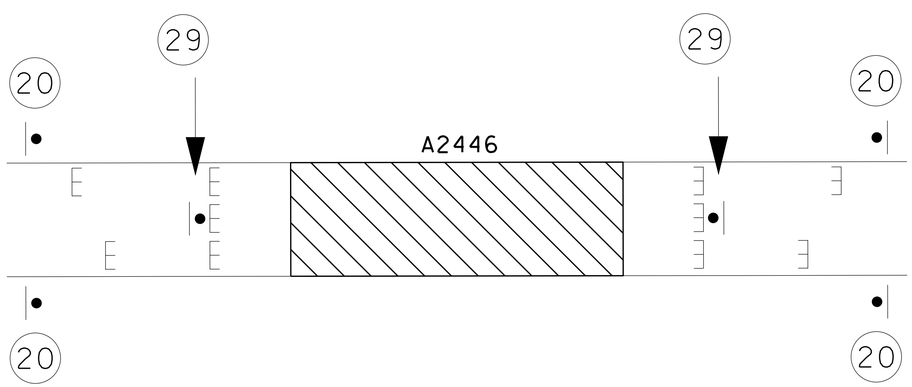

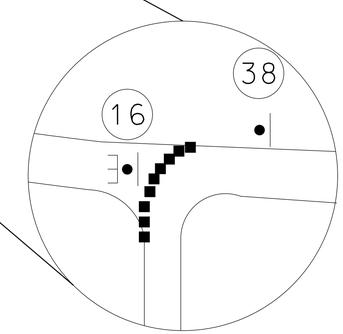

WORK ZONE

END DETOUR
M04-8a
52

ROAD CLOSED
R11-2
29

WORK ZONE

MOVEABLE BARRICADES

FOR INFORMTIONAL PURPOSE ONLY
TO BE INSTALLED BY OTHERS

NOT TO SCALE

A24461
O'BRIEN RD OVER US-50
TRAFFIC CONTROL SHEET
SHEET 20 OF 52

"THIS MEDIA SHOULD NOT BE CONSIDERED A CERTIFIED DOCUMENT."

DATE PREPARED	12/15/2013
ROUTE	VAR.
STATE	MO
DISTRICT	KC
SHEET NO.	29
COUNTY	JACKSON
JOB NO.	J4P2191
CONTRACT ID.	
PROJECT NO.	
BRIDGE NO.	A24461

DESCRIPTION

DATE

MISSOURI HIGHWAYS AND TRANSPORTATION COMMISSION

105 WEST CAPITOL
JEFFERSON CITY, MO 65102
1-888-ASK-MODOT (1-888-275-6636)

IF A SEAL IS PRESENT ON THIS SHEET IT HAS BEEN ELECTRONICALLY SEALED AND DATED.

REV.

TRAFFIC CONTROL LEGEND

- SIGN (SINGLE SIDED)
- SIGN (DOUBLE SIDED)
- FLAGGER
- CONE
- CHANNELIZER
- BARRICADE
- FLASHING ARROW PANEL
- WORK ZONE

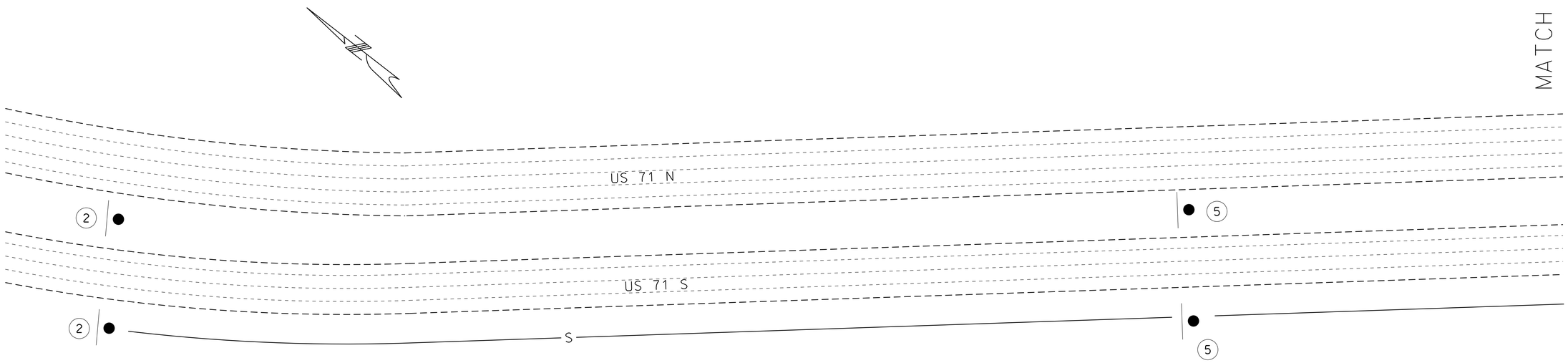

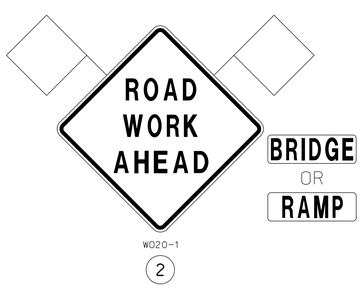

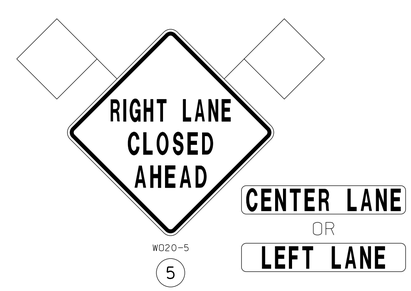

SCALE

0 50 100 150

NOTE: REFER TO TRAFFIC CONTROL SHEET 1 OF 52 FOR SIGN SPACING

A27331/A27452
US-71 OVER BLUE RIVER
TRAFFIC CONTROL SHEET
PHASE 1
SHEET 21 OF 52

"THIS MEDIA SHOULD NOT BE CONSIDERED A CERTIFIED DOCUMENT."

DATE PREPARED	12/15/2013
ROUTE	VAR.
STATE	MO
DISTRICT	KC
SHEET NO.	30
COUNTY	JACKSON
JOB NO.	J4P2191
CONTRACT ID.	
PROJECT NO.	
BRIDGE NO.	A27331/A27452

DATE	DESCRIPTION

MISSOURI HIGHWAYS AND TRANSPORTATION COMMISSION

105 WEST CAPITOL
JEFFERSON CITY, MO 65102
1-888-ASK-MODOT (1-888-275-6636)

IF A SEAL IS PRESENT ON THIS SHEET IT HAS BEEN ELECTRONICALLY SEALED AND DATED.

REV.

TRAFFIC CONTROL LEGEND

- SIGN (SINGLE SIDED)
- SIGN (DOUBLE SIDED)
- FLAGGER
- CONE
- CHANNELIZER
- BARRICADE
- FLASHING ARROW PANEL
- WORK ZONE

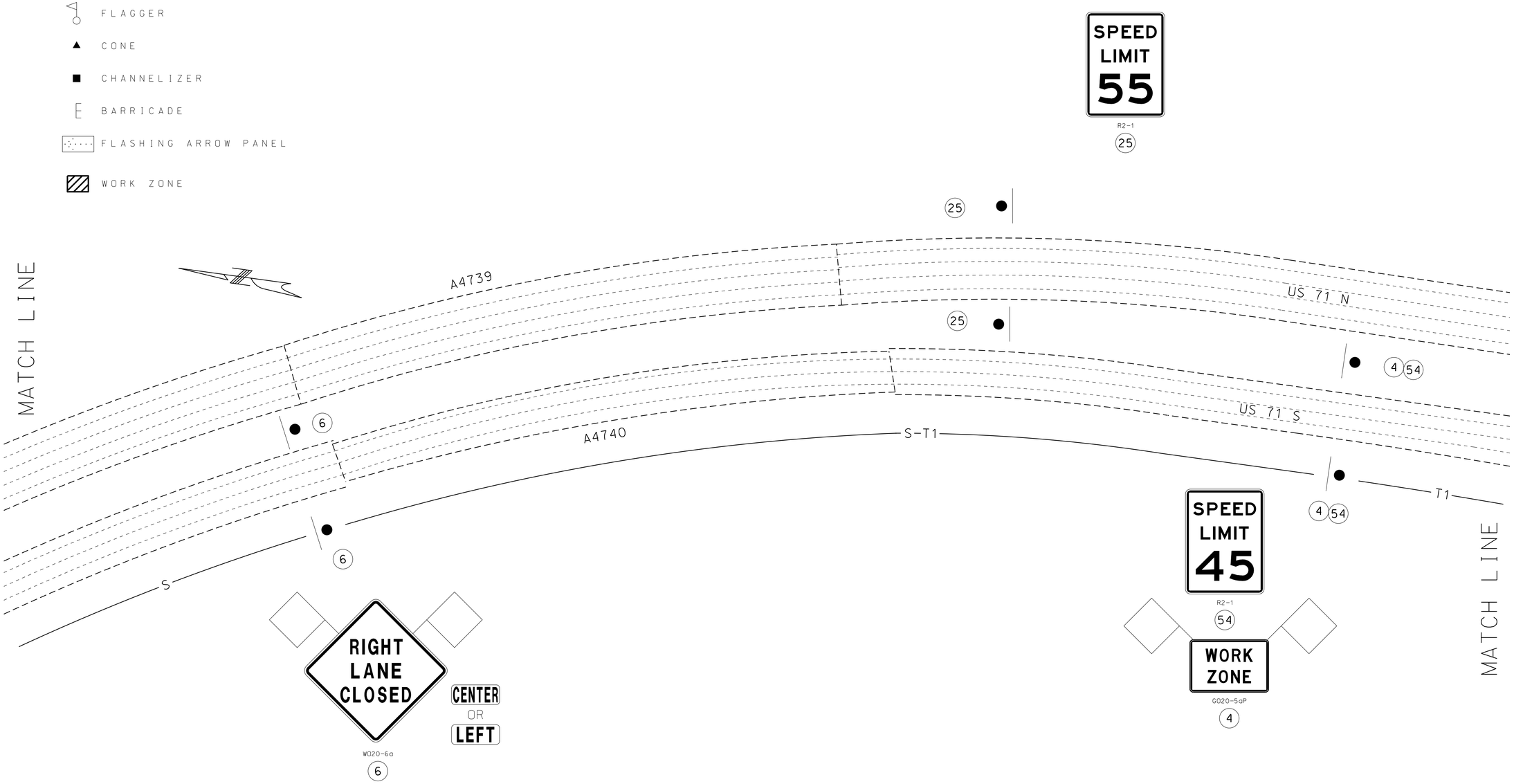

SCALE

0 50 100 150

NOTE: REFER TO TRAFFIC CONTROL SHEET 1 OF 52 FOR SIGN SPACING

A27331/A27452
US-71 OVER BLUE RIVER
TRAFFIC CONTROL SHEET
PHASE 1
SHEET 22 OF 52

"THIS MEDIA SHOULD NOT BE CONSIDERED A CERTIFIED DOCUMENT."

DATE PREPARED	12/15/2013
ROUTE	VAR.
STATE	MO
DISTRICT	KC
SHEET NO.	31
COUNTY	JACKSON
JOB NO.	J4P2191
CONTRACT ID.	
PROJECT NO.	
BRIDGE NO.	A27331/A27452

DESCRIPTION	DATE

MISSOURI HIGHWAYS AND TRANSPORTATION COMMISSION

105 WEST CAPITOL
JEFFERSON CITY, MO 65102
1-888-ASK-MODOT (1-888-275-6636)

IF A SEAL IS PRESENT ON THIS SHEET IT HAS BEEN ELECTRONICALLY SEALED AND DATED.

REV.

TRAFFIC CONTROL LEGEND

- SIGN (SINGLE SIDED)
- SIGN (DOUBLE SIDED)
- FLAGGER
- CONE
- CHANNELIZER
- BARRICADE
- FLASHING ARROW PANEL
- WORK ZONE

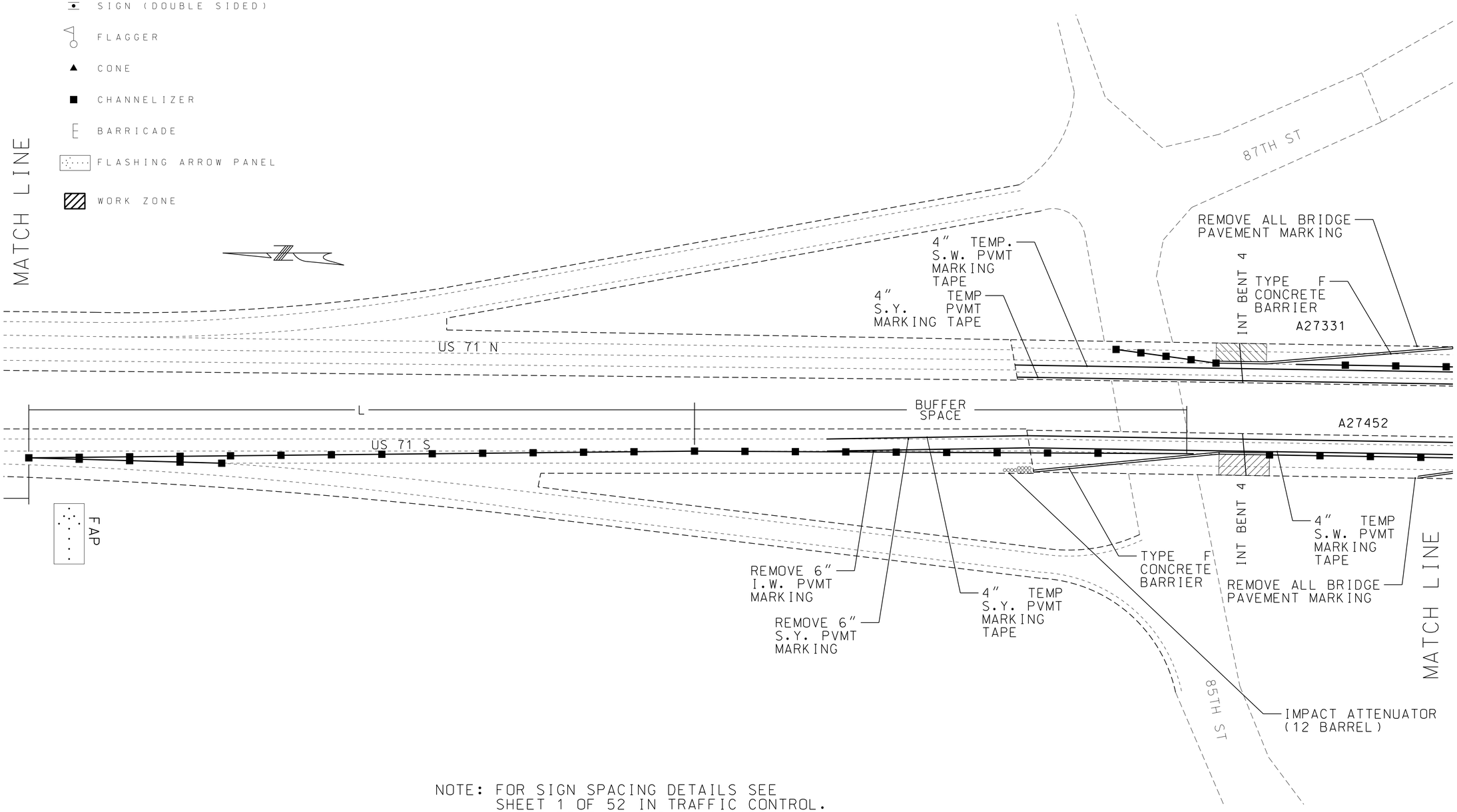

NOTE: FOR SIGN SPACING DETAILS SEE SHEET 1 OF 52 IN TRAFFIC CONTROL. FOR TYPE F TEMPORARY CONCRETE TRAFFIC BARRIER CONFIGURATION SEE SHEET 4 OF 52

SCALE

0 50 100 150

A27331/A27452
US-71 OVER BLUE RIVER
TRAFFIC CONTROL SHEET
PHASE 1
SHEET 23 OF 52

"THIS MEDIA SHOULD NOT BE CONSIDERED A CERTIFIED DOCUMENT."

DATE PREPARED	12/15/2013
ROUTE	VAR.
STATE	MO
DISTRICT	KC
SHEET NO.	32
COUNTY	JACKSON
JOB NO.	J4P2191
CONTRACT ID.	
PROJECT NO.	
BRIDGE NO.	A27331/A27452

DESCRIPTION

DATE

MISSOURI HIGHWAYS AND TRANSPORTATION COMMISSION

105 WEST CAPITOL
JEFFERSON CITY, MO 65102
1-888-ASK-MODOT (1-888-275-6636)

IF A SEAL IS PRESENT ON THIS SHEET IT HAS BEEN ELECTRONICALLY SEALED AND DATED.

REV.

TRAFFIC CONTROL LEGEND

- SIGN (SINGLE SIDED)
- SIGN (DOUBLE SIDED)
- FLAGGER
- CONE
- CHANNELIZER
- BARRICADE
- FLASHING ARROW PANEL
- WORK ZONE

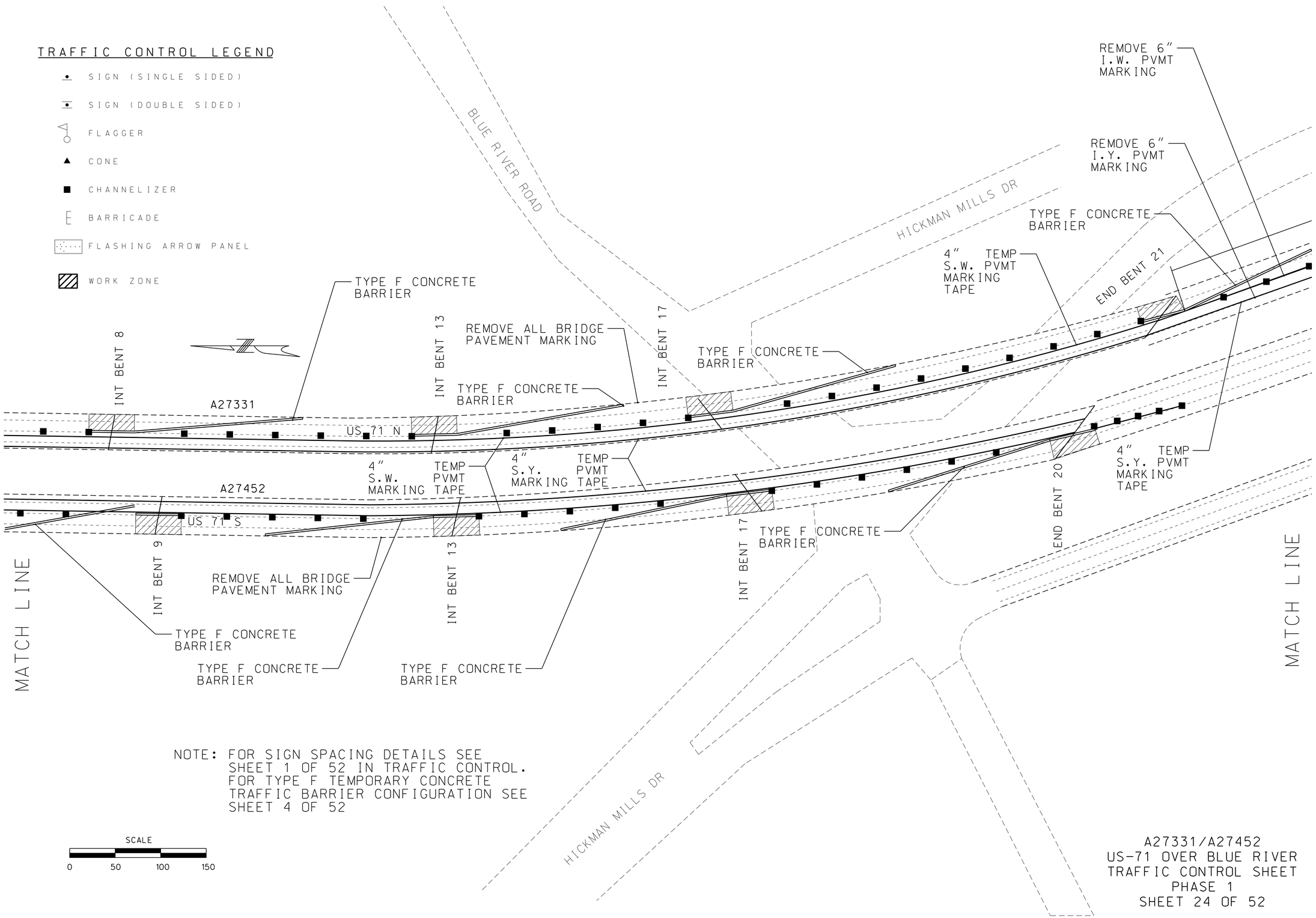

NOTE: FOR SIGN SPACING DETAILS SEE SHEET 1 OF 52 IN TRAFFIC CONTROL. FOR TYPE F TEMPORARY CONCRETE TRAFFIC BARRIER CONFIGURATION SEE SHEET 4 OF 52

SCALE

0 50 100 150

A27331/A27452
US-71 OVER BLUE RIVER
TRAFFIC CONTROL SHEET
PHASE 1
SHEET 24 OF 52

"THIS MEDIA SHOULD NOT BE CONSIDERED A CERTIFIED DOCUMENT."

DATE PREPARED	12/15/2013
ROUTE	VAR.
STATE	MO
DISTRICT	KC
SHEET NO.	33
COUNTY	JACKSON
JOB NO.	J4P2191
CONTRACT ID.	
PROJECT NO.	
BRIDGE NO.	A27331/A27452

DESCRIPTION

DATE

MISSOURI HIGHWAYS AND TRANSPORTATION COMMISSION

105 WEST CAPITOL
JEFFERSON CITY, MO 65102
1-888-ASK-MODOT (1-888-275-6636)

IF A SEAL IS PRESENT ON THIS SHEET IT HAS BEEN ELECTRONICALLY SEALED AND DATED.

REV.

TRAFFIC CONTROL LEGEND

- SIGN (SINGLE SIDED)
- SIGN (DOUBLE SIDED)
- FLAGGER
- CONE
- CHANNELIZER
- BARRICADE
- FLASHING ARROW PANEL
- WORK ZONE

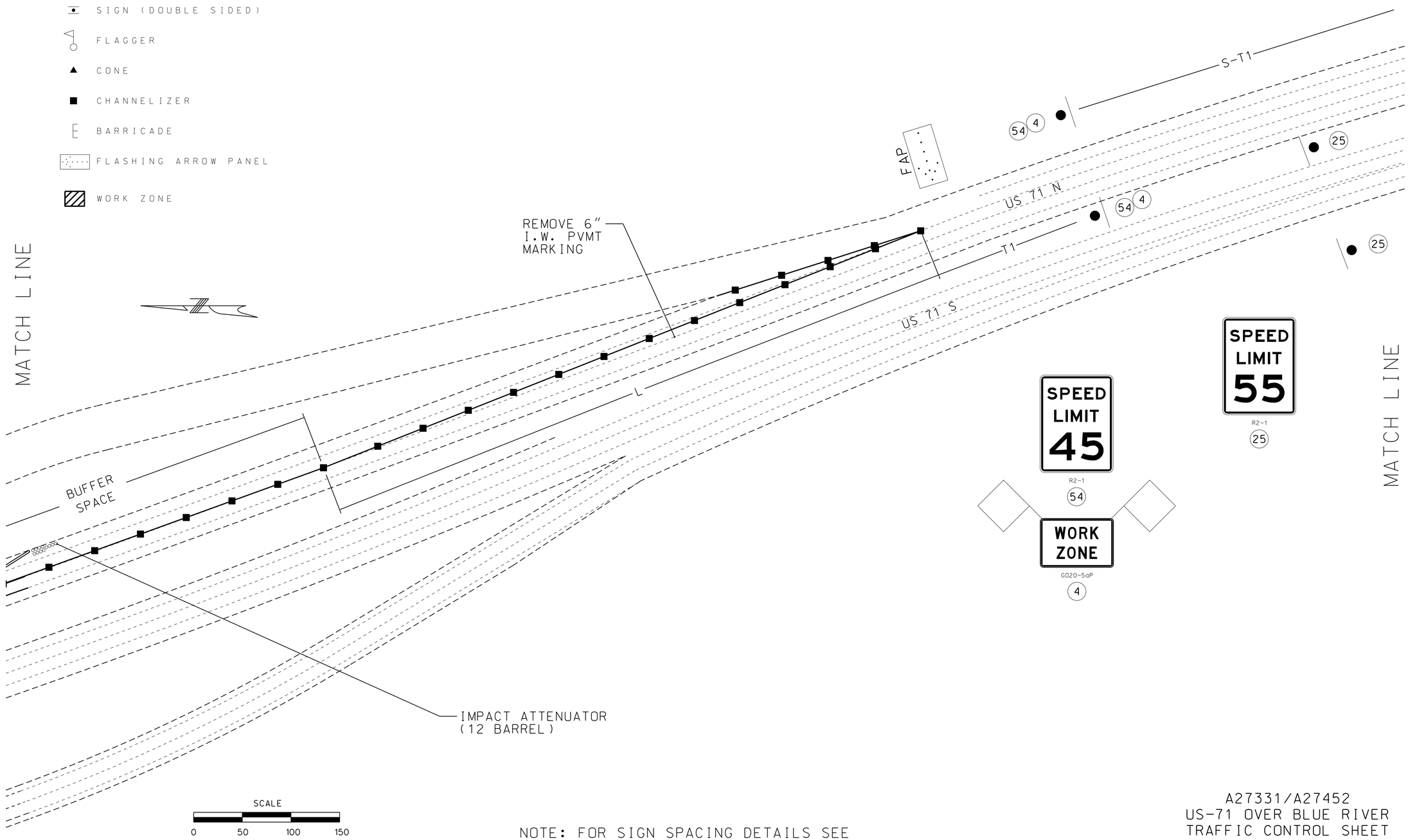

NOTE: FOR SIGN SPACING DETAILS SEE SHEET 1 OF 52 IN TRAFFIC CONTROL.

A27331/A27452
US-71 OVER BLUE RIVER
TRAFFIC CONTROL SHEET
PHASE 1
SHEET 25 OF 52

"THIS MEDIA SHOULD NOT BE CONSIDERED A CERTIFIED DOCUMENT."

DATE PREPARED	12/15/2013
ROUTE	VAR.
STATE	MO
DISTRICT	KC
SHEET NO.	34
COUNTY	JACKSON
JOB NO.	J4P2191
CONTRACT ID.	
PROJECT NO.	
BRIDGE NO.	A27331/A27452

DESCRIPTION	DATE

MISSOURI HIGHWAYS AND TRANSPORTATION COMMISSION
105 WEST CAPITOL
JEFFERSON CITY, MO 65102
1-888-ASK-MODOT (1-888-275-6636)

IF A SEAL IS PRESENT ON THIS SHEET IT HAS BEEN ELECTRONICALLY SEALED AND DATED.

REV.

TRAFFIC CONTROL LEGEND

- SIGN (SINGLE SIDED)
- SIGN (DOUBLE SIDED)
- FLAGGER
- CONE
- CHANNELIZER
- BARRICADE
- FLASHING ARROW PANEL
- WORK ZONE

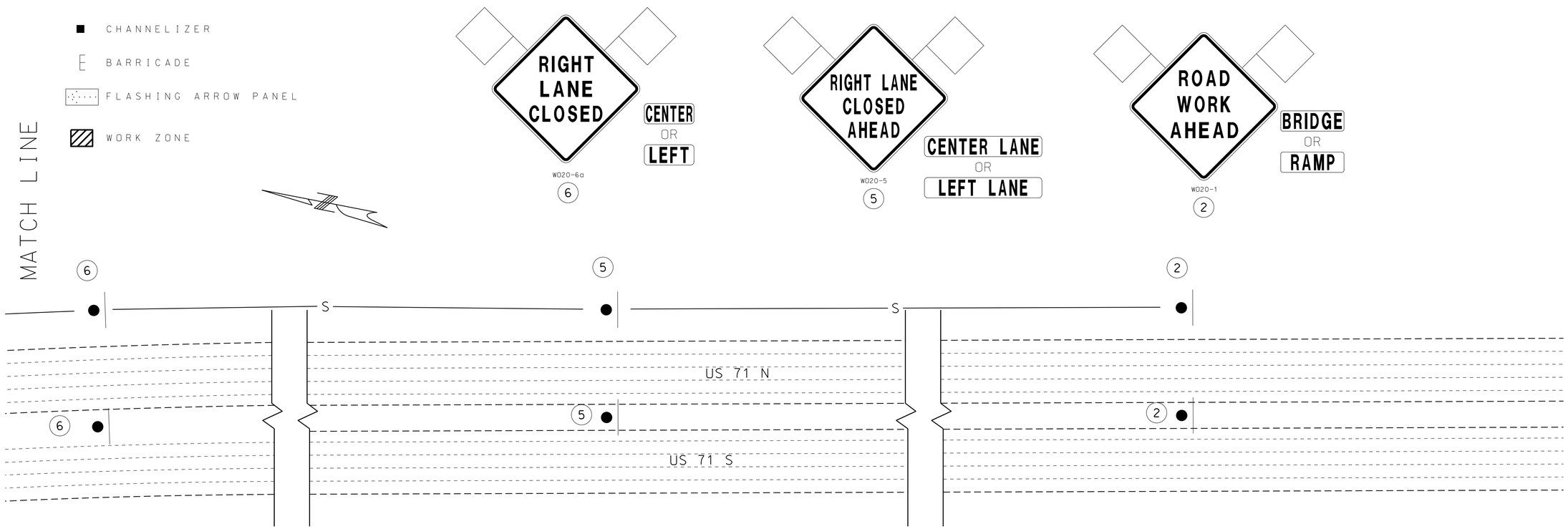

SCALE

0 50 100 150

NOTE: FOR SIGN SPACING DETAILS SEE SHEET 1 OF 52 IN TRAFFIC CONTROL.

A27331/A27452
US-71 OVER BLUE RIVER
TRAFFIC CONTROL SHEET
PHASE 1
SHEET 26 OF 52

"THIS MEDIA SHOULD NOT BE CONSIDERED A CERTIFIED DOCUMENT."

DATE PREPARED	12/15/2013
ROUTE	VAR.
STATE	MO
DISTRICT	KC
SHEET NO.	35
COUNTY	JACKSON
JOB NO.	J4P2191
CONTRACT ID.	
PROJECT NO.	
BRIDGE NO.	A27331/A27452

DESCRIPTION

DATE

MISSOURI HIGHWAYS AND TRANSPORTATION COMMISSION

105 WEST CAPITOL
JEFFERSON CITY, MO 65102
1-888-ASK-MODOT (1-888-275-6636)

IF A SEAL IS PRESENT ON THIS SHEET IT HAS BEEN ELECTRONICALLY SEALED AND DATED.

REV.

TRAFFIC CONTROL LEGEND

- SIGN (SINGLE SIDED)
- SIGN (DOUBLE SIDED)
- FLAGGER
- CONE
- CHANNELIZER
- BARRICADE
- FLASHING ARROW PANEL
- WORK ZONE

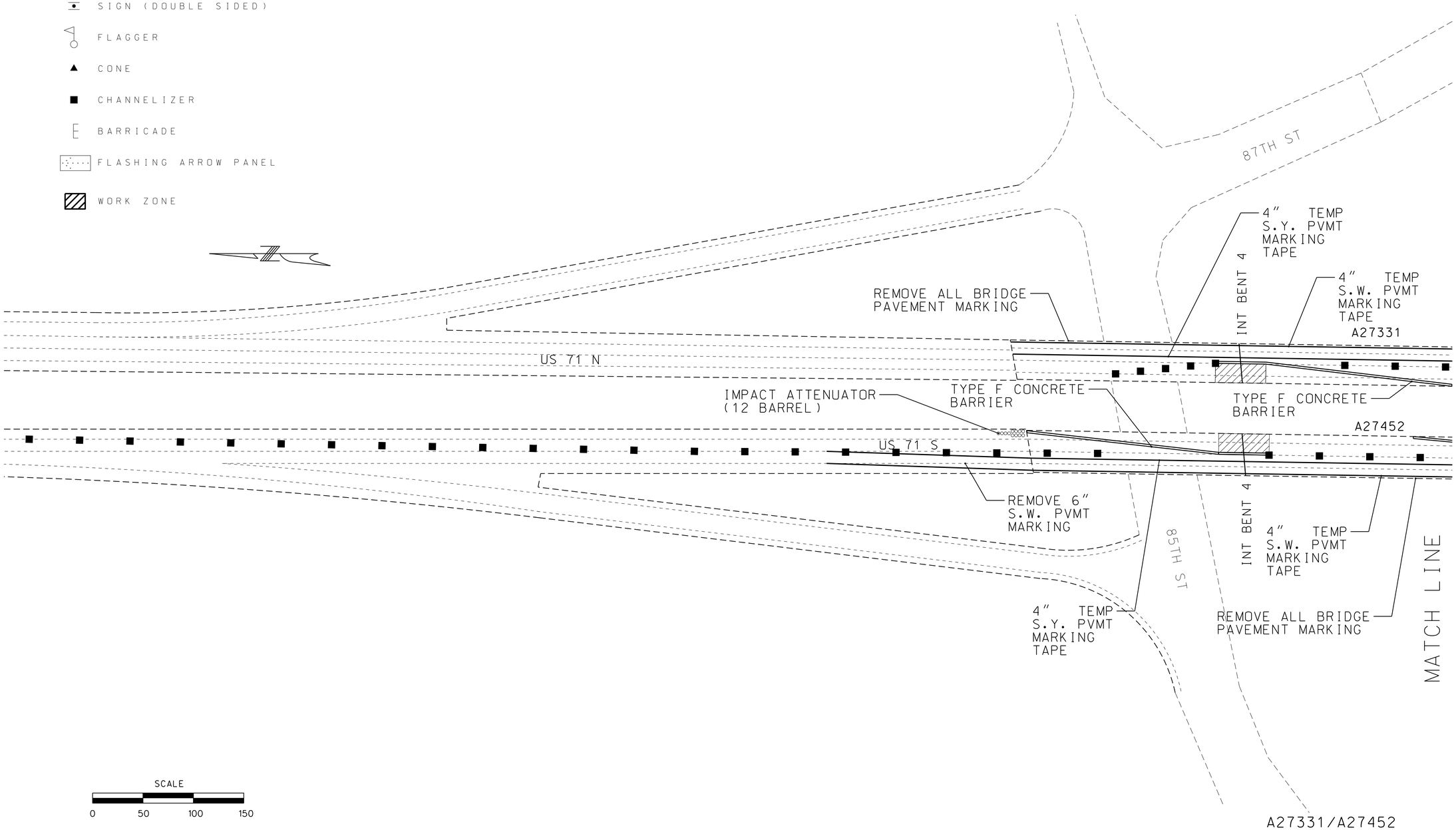

NOTE: TRAFFIC BARRIER CONFIGURATION SEE SHEET 4 OF 52

A27331/A27452
US-71 OVER BLUE RIVER
TRAFFIC CONTROL SHEET
PHASE 2
SHEET 27 OF 52

"THIS MEDIA SHOULD NOT BE CONSIDERED A CERTIFIED DOCUMENT."

DATE PREPARED	12/15/2013
ROUTE	VAR.
STATE	MO
DISTRICT	KC
SHEET NO.	36
COUNTY	JACKSON
JOB NO.	J4P2191
CONTRACT ID.	
PROJECT NO.	
BRIDGE NO.	A27331/A27452

DESCRIPTION

DATE

MISSOURI HIGHWAYS AND TRANSPORTATION COMMISSION

105 WEST CAPITOL
JEFFERSON CITY, MO 65102
1-888-ASK-MODOT (1-888-275-6636)

IF A SEAL IS PRESENT ON THIS SHEET IT HAS BEEN ELECTRONICALLY SEALED AND DATED.

REV.

TRAFFIC CONTROL LEGEND

- SIGN (SINGLE SIDED)
- SIGN (DOUBLE SIDED)
- FLAGGER
- CONE
- CHANNELIZER
- BARRICADE
- FLASHING ARROW PANEL
- WORK ZONE

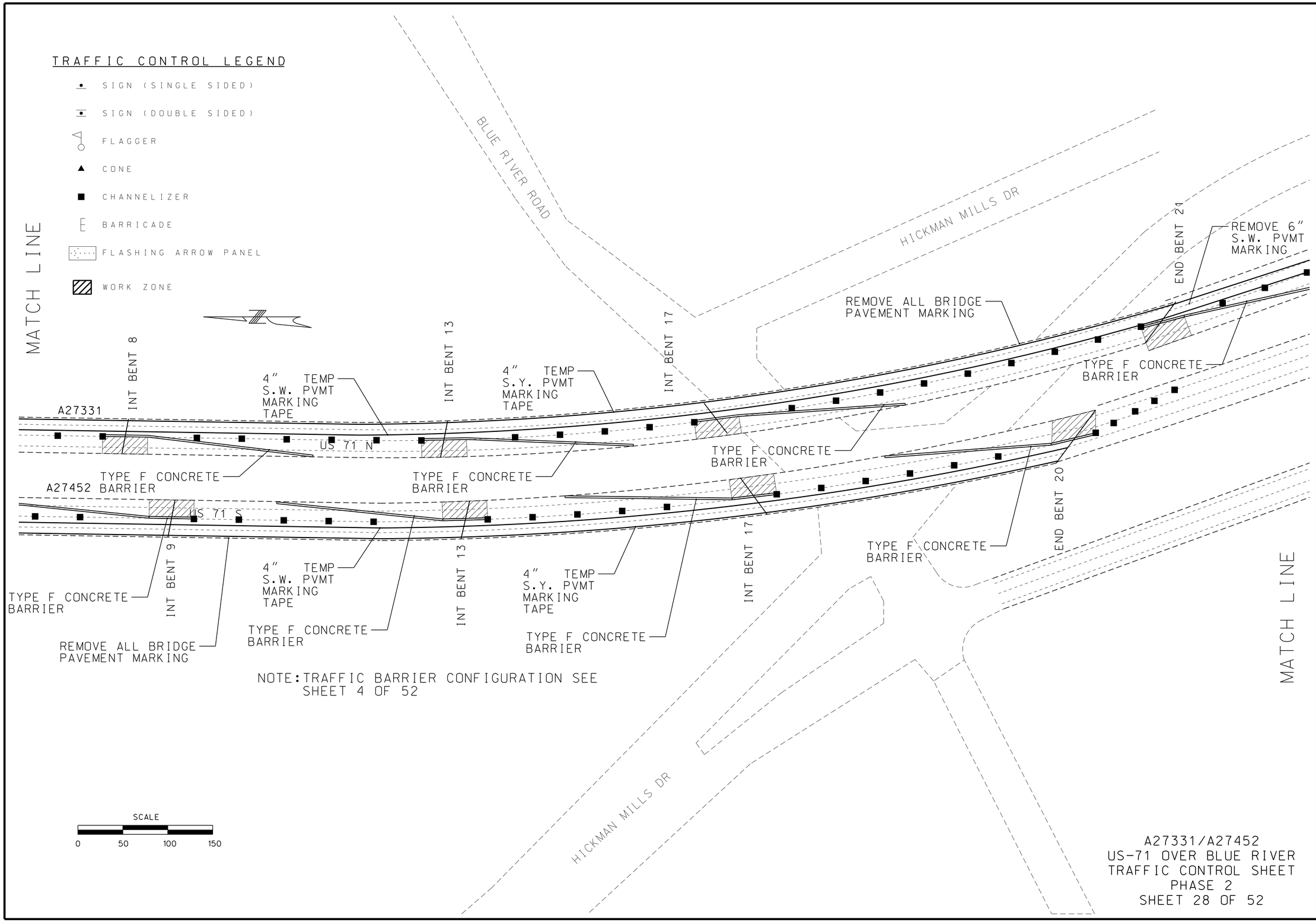

NOTE: TRAFFIC BARRIER CONFIGURATION SEE SHEET 4 OF 52

SCALE
0 50 100 150

A27331/A27452
US-71 OVER BLUE RIVER
TRAFFIC CONTROL SHEET
PHASE 2
SHEET 28 OF 52

"THIS MEDIA SHOULD NOT BE CONSIDERED A CERTIFIED DOCUMENT."

DATE PREPARED	12/15/2013
ROUTE	VAR.
STATE	MO
DISTRICT	KC
SHEET NO.	37
COUNTY	JACKSON
JOB NO.	J4P2191
CONTRACT ID.	
PROJECT NO.	
BRIDGE NO.	A27331/A27452

DESCRIPTION

DATE

MISSOURI HIGHWAYS AND TRANSPORTATION COMMISSION

105 WEST CAPITOL
JEFFERSON CITY, MO 65102
1-888-ASK-MODOT (1-888-275-6636)

IF A SEAL IS PRESENT ON THIS SHEET IT HAS BEEN ELECTRONICALLY SEALED AND DATED.

REV.

TRAFFIC CONTROL LEGEND

- SIGN (SINGLE SIDED)
- SIGN (DOUBLE SIDED)
- FLAGGER
- CONE
- CHANNELIZER
- BARRICADE
- FLASHING ARROW PANEL
- WORK ZONE

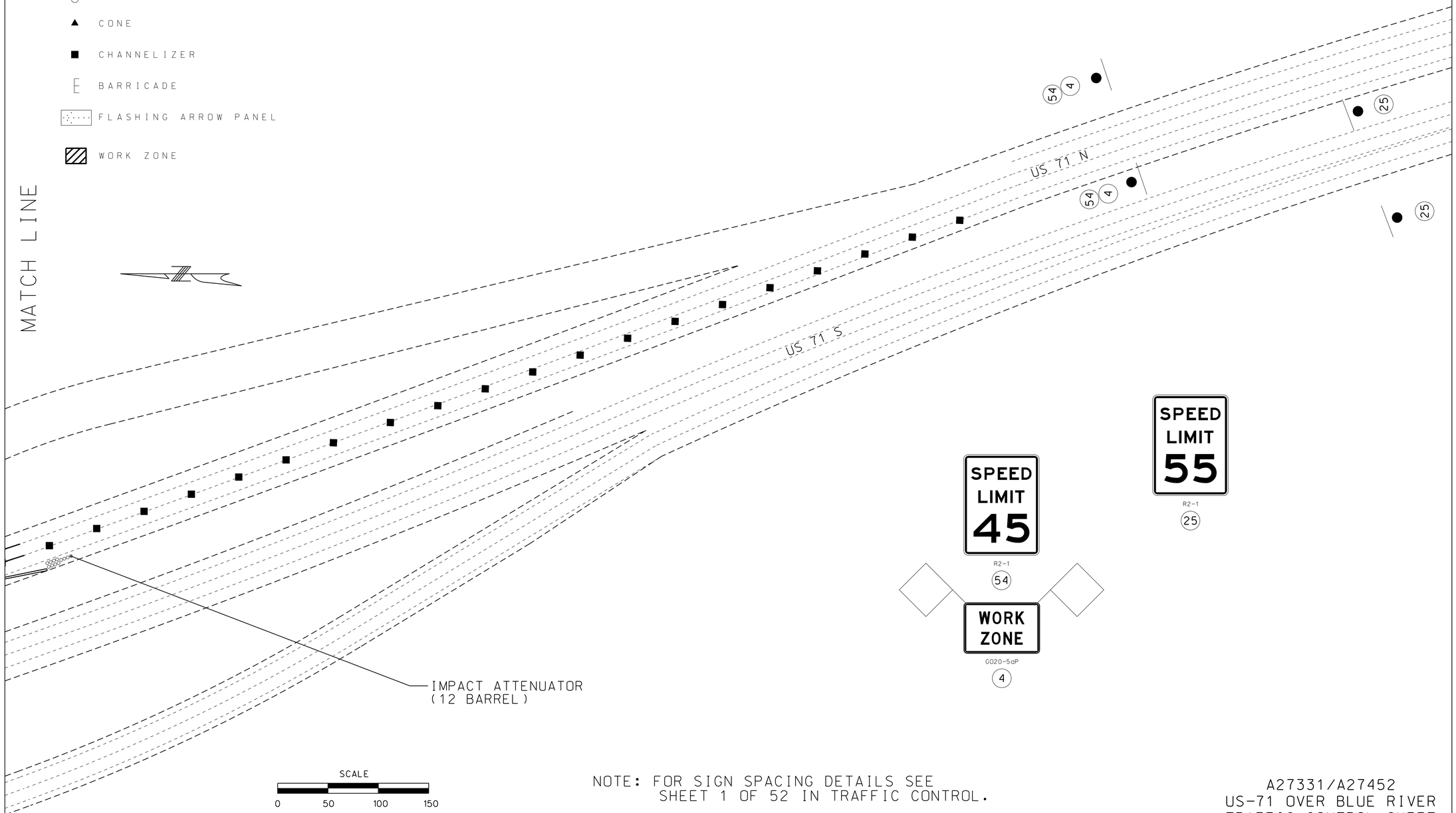

NOTE: FOR SIGN SPACING DETAILS SEE SHEET 1 OF 52 IN TRAFFIC CONTROL.

A27331/A27452
US-71 OVER BLUE RIVER
TRAFFIC CONTROL SHEET
PHASE 2
SHEET 29 OF 52

"THIS MEDIA SHOULD NOT BE CONSIDERED A CERTIFIED DOCUMENT."

DATE PREPARED	
12/15/2013	
ROUTE	STATE
VAR.	MO
DISTRICT	SHEET NO.
KC	38
COUNTY	
JACKSON	
JOB NO.	
J4P2191	
CONTRACT ID.	
PROJECT NO.	
BRIDGE NO.	
A27331/A27452	

DESCRIPTION	DATE

MISSOURI HIGHWAYS AND TRANSPORTATION COMMISSION
105 WEST CAPITOL
JEFFERSON CITY, MO 65102
1-888-ASK-MODOT (1-888-275-6636)

IF A SEAL IS PRESENT ON THIS SHEET IT HAS BEEN ELECTRONICALLY SEALED AND DATED.

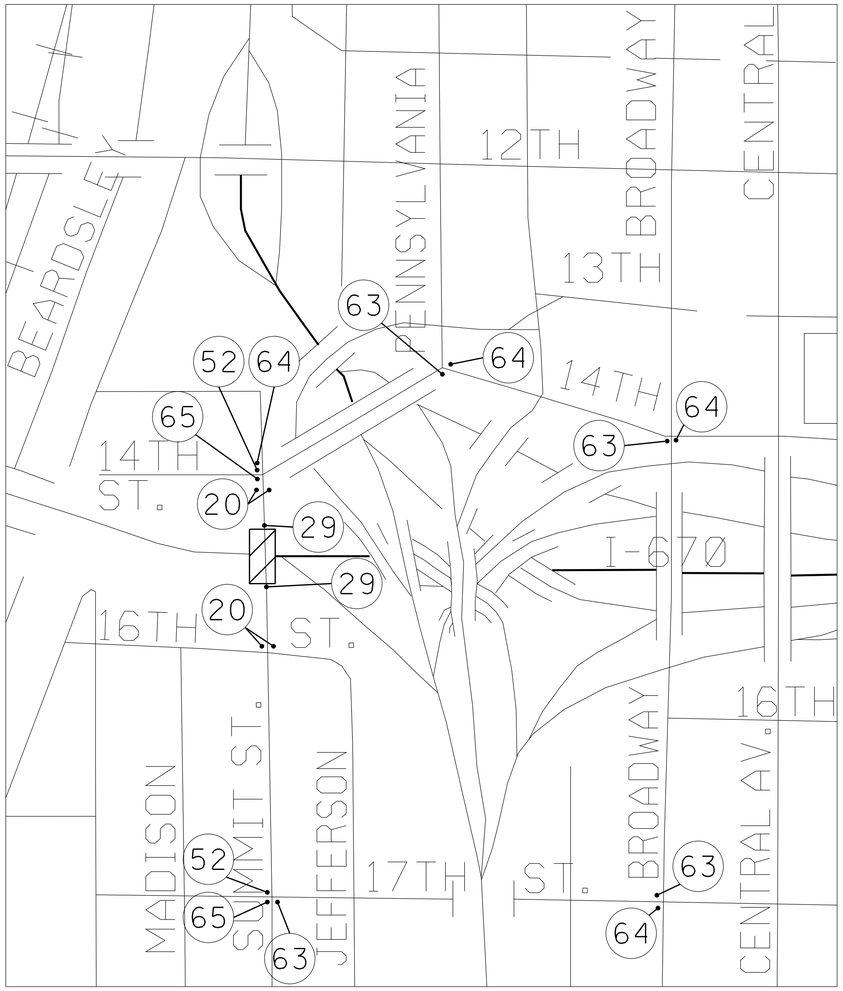

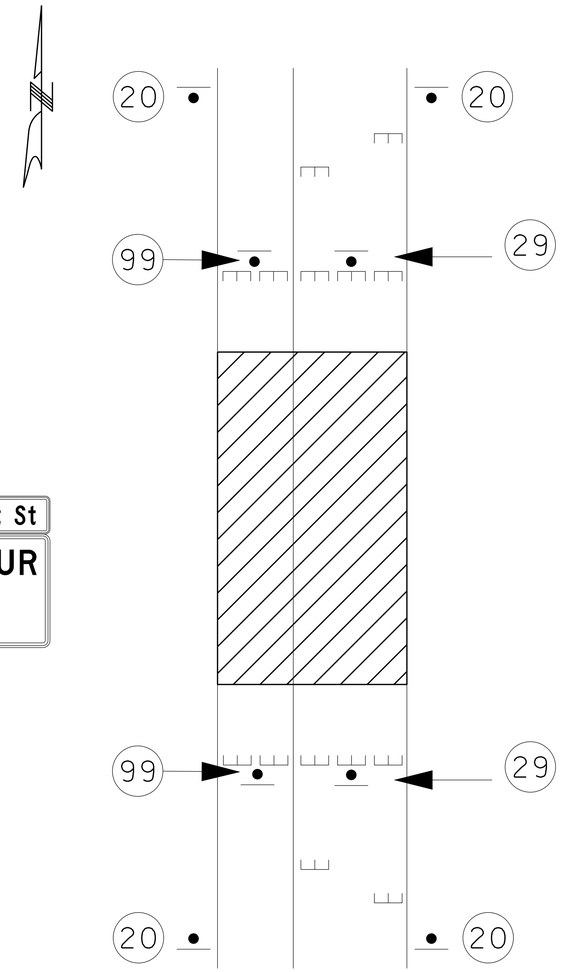

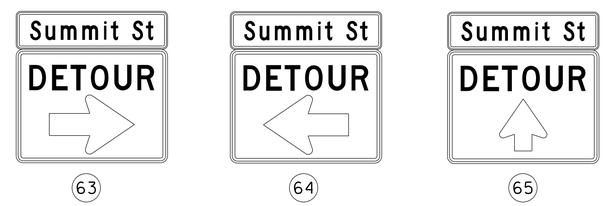

WORK ZONE

MOVEABLE BARRICADES

NOT TO SCALE

A31412
SUMMIT ST OVER I-670
TRAFFIC CONTROL
SHEET 30 OF 52

"THIS MEDIA SHOULD NOT BE CONSIDERED A CERTIFIED DOCUMENT."

DATE PREPARED	12/15/2013
ROUTE	VAR.
STATE	MO
DISTRICT	KC
SHEET NO.	39
COUNTY	JACKSON
JOB NO.	J4P2191
CONTRACT ID.	
PROJECT NO.	
BRIDGE NO.	A31412

DATE	DESCRIPTION

MISSOURI HIGHWAYS AND TRANSPORTATION COMMISSION

105 WEST CAPITOL
JEFFERSON CITY, MO 65102
1-888-ASK-MODOT (1-888-275-6636)

IF A SEAL IS PRESENT ON THIS SHEET IT HAS BEEN ELECTRONICALLY SEALED AND DATED.

REV.

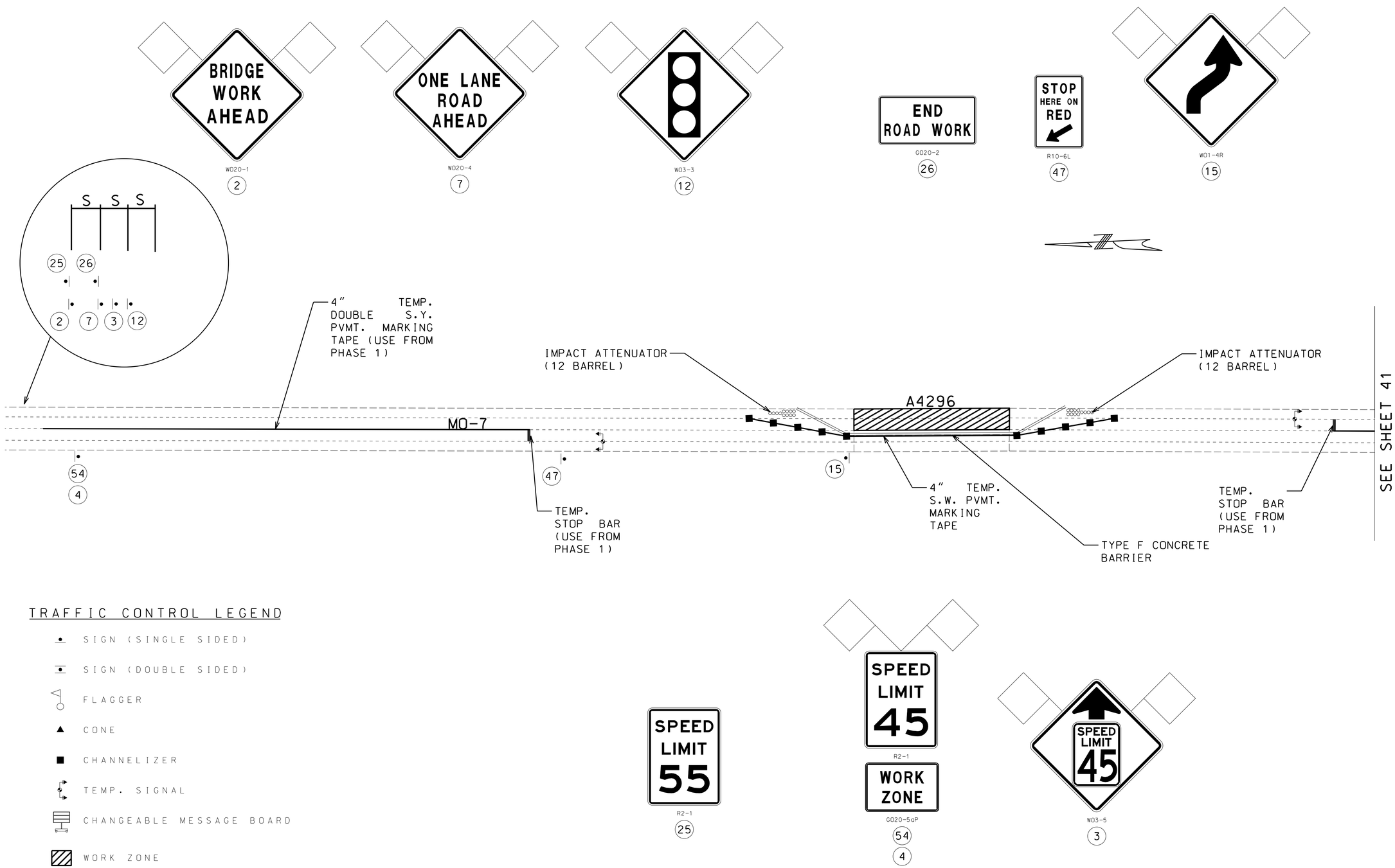

NOT TO SCALE

NOTE: REFER TO TRAFFIC CONTROL SHEET 1 OF 52 FOR SIGN SPACING

A42961
MO-7 OVER WEST FIRE PRAIRIE CREEK
TRAFFIC CONTROL SHEET
PHASE 1
SHEET 31 OF 52

"THIS MEDIA SHOULD NOT BE CONSIDERED A CERTIFIED DOCUMENT."

DATE PREPARED	12/15/2013
ROUTE	VAR.
STATE	MO
DISTRICT	KC
SHEET NO.	40
COUNTY	JACKSON
JOB NO.	J4P2191
CONTRACT ID.	
PROJECT NO.	
BRIDGE NO.	A42961

DATE	DESCRIPTION

MISSOURI HIGHWAYS AND TRANSPORTATION COMMISSION
105 WEST CAPITOL
JEFFERSON CITY, MO 65102
1-888-ASK-MODOT (1-888-275-6636)

IF A SEAL IS PRESENT ON THIS SHEET IT HAS BEEN ELECTRONICALLY SEALED AND DATED.

REV.

W020-1

(2)

W020-4

(7)

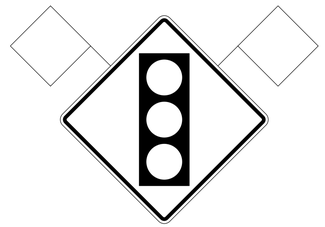

W03-3

(12)

G020-2

(26)

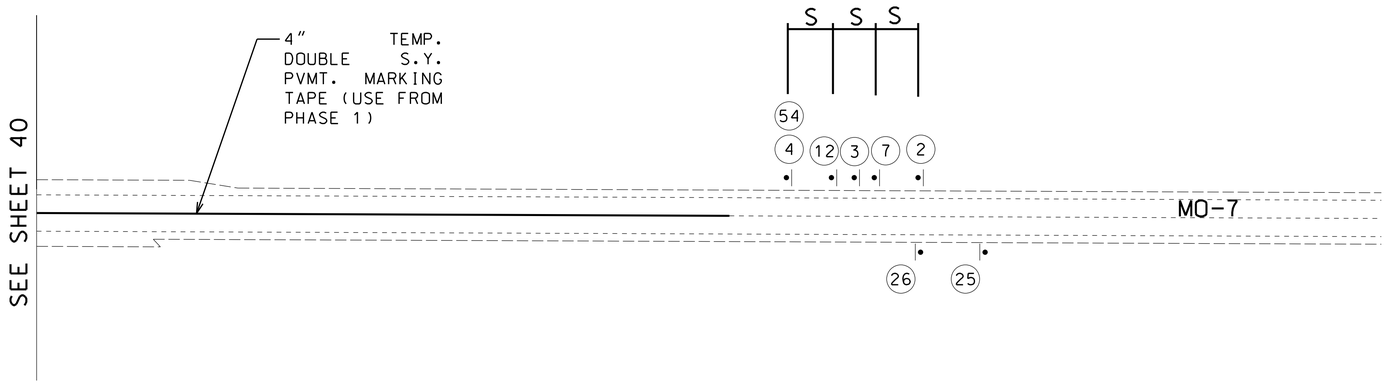

TRAFFIC CONTROL LEGEND

- SIGN (SINGLE SIDED)
- SIGN (DOUBLE SIDED)
- FLAGGER
- CONE
- CHANNELIZER
- TEMP. SIGNAL
- CHANGEABLE MESSAGE BOARD
- WORK ZONE

NOT TO SCALE

R2-1

(25)

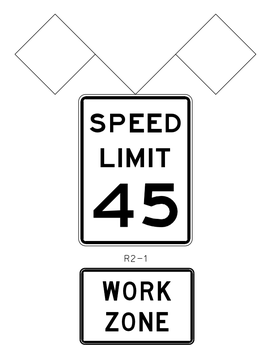

R2-1

G020-5aP

(54)

(4)

W03-5

(3)

NOTE: REFER TO TRAFFIC CONTROL SHEET 1 OF 52 FOR SIGN SPACING

A42961
MO-7 OVER WEST FIRE PRAIRIE CREEK
TRAFFIC CONTROL SHEET
PHASE 1
SHEET 32 OF 52

"THIS MEDIA SHOULD NOT BE CONSIDERED A CERTIFIED DOCUMENT."

DATE PREPARED	12/15/2013
ROUTE	VAR.
STATE	MO
DISTRICT	KC
SHEET NO.	41
COUNTY	JACKSON
JOB NO.	J4P2191
CONTRACT ID.	
PROJECT NO.	
BRIDGE NO.	A42961

DATE	DESCRIPTION

MISSOURI HIGHWAYS AND TRANSPORTATION COMMISSION

105 WEST CAPITOL
JEFFERSON CITY, MO 65102
1-888-ASK-MODOT (1-888-275-6636)

IF A SEAL IS PRESENT ON THIS SHEET IT HAS BEEN ELECTRONICALLY SEALED AND DATED.

REV.

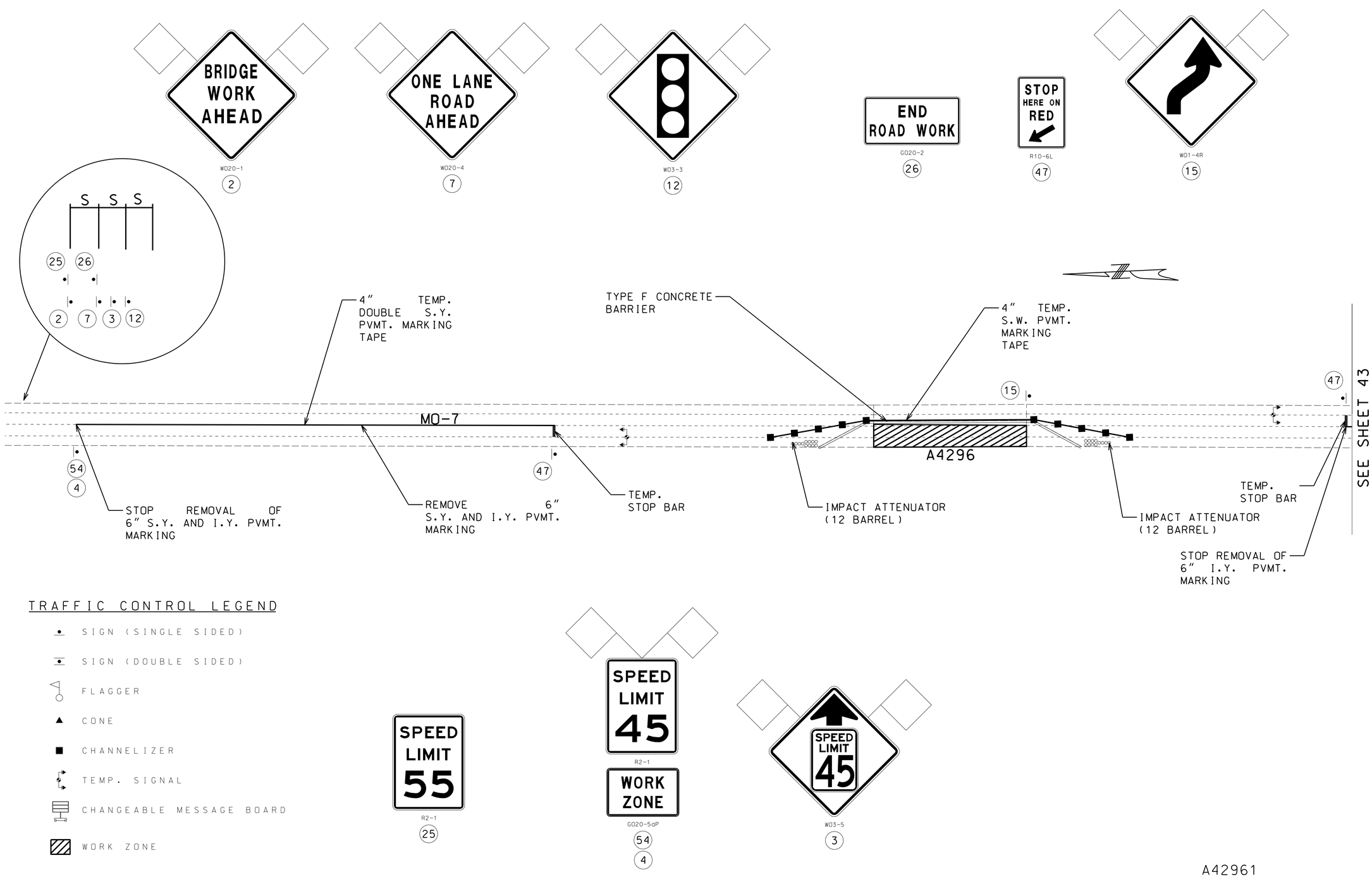

TRAFFIC CONTROL LEGEND

- SIGN (SINGLE SIDED)
- SIGN (DOUBLE SIDED)
- FLAGGER
- CONE
- CHANNELIZER
- TEMP. SIGNAL
- CHANGEABLE MESSAGE BOARD
- WORK ZONE

NOT TO SCALE

NOTE: REFER TO TRAFFIC CONTROL SHEET 1 OF 52 FOR SIGN SPACING

A42961
MO-7 OVER WEST FIRE PRAIRIE CREEK
TRAFFIC CONTROL SHEET
PHASE 2
SHEET 33 OF 52

"THIS MEDIA SHOULD NOT BE CONSIDERED A CERTIFIED DOCUMENT."

DATE PREPARED	
12/15/2013	
ROUTE	STATE
VAR.	MO
DISTRICT	SHEET NO.
KC	42
COUNTY	
JACKSON	
JOB NO.	
J4P2191	
CONTRACT ID.	
PROJECT NO.	
BRIDGE NO.	
A42961	

DATE	DESCRIPTION

MISSOURI HIGHWAYS AND TRANSPORTATION COMMISSION
105 WEST CAPITOL
JEFFERSON CITY, MO 65102
1-888-ASK-MODOT (1-888-275-6636)

IF A SEAL IS PRESENT ON THIS SHEET IT HAS BEEN ELECTRONICALLY SEALED AND DATED.

REV.

W020-1
(2)

W020-4
(7)

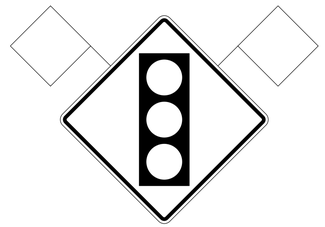

W03-3
(12)

G020-2
(26)

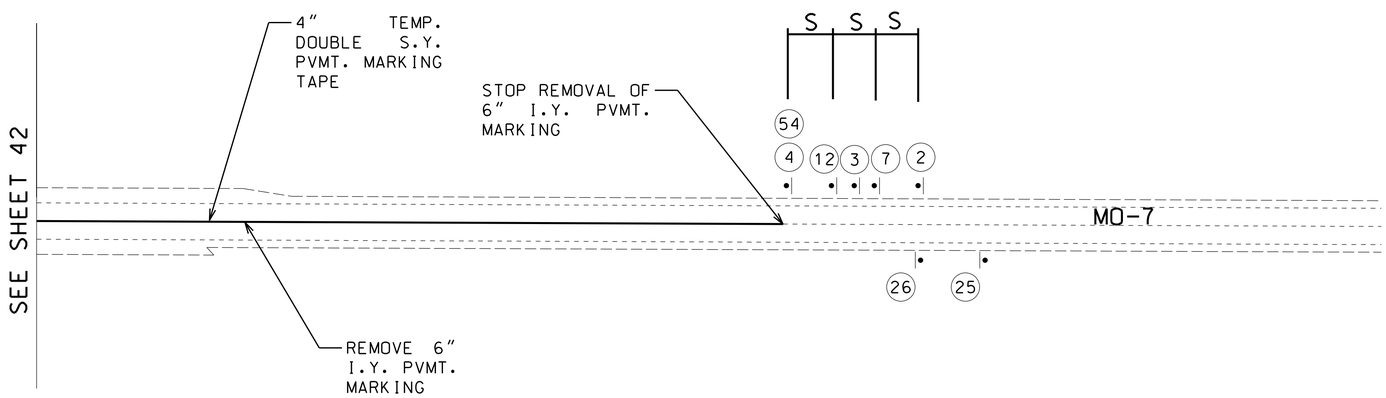

TRAFFIC CONTROL LEGEND

- SIGN (SINGLE SIDED)
- SIGN (DOUBLE SIDED)
- FLAGGER
- CONE
- CHANNELIZER
- TEMP. SIGNAL
- CHANGEABLE MESSAGE BOARD
- WORK ZONE

R2-1
(25)

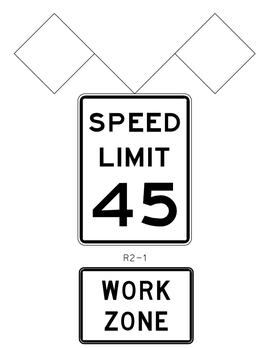

R2-1

G020-5aP
(54)
(4)

W03-5
(3)

NOT TO SCALE

NOTE: REFER TO TRAFFIC CONTROL SHEET 1 OF 52 FOR SIGN SPACING

A42961
MO-7 OVER WEST FIRE PRAIRIE CREEK
TRAFFIC CONTROL SHEET
PHASE 2
SHEET 34 OF 52

"THIS MEDIA SHOULD NOT BE CONSIDERED A CERTIFIED DOCUMENT."

DATE PREPARED	12/15/2013
ROUTE	VAR.
STATE	MO
DISTRICT	KC
SHEET NO.	43
COUNTY	JACKSON
JOB NO.	J4P2191
CONTRACT ID.	
PROJECT NO.	
BRIDGE NO.	A42961

DATE	DESCRIPTION

MISSOURI HIGHWAYS AND TRANSPORTATION COMMISSION

105 WEST CAPITOL
JEFFERSON CITY, MO 65102
1-888-ASK-MODOT (1-888-275-6636)

IF A SEAL IS PRESENT ON THIS SHEET IT HAS BEEN ELECTRONICALLY SEALED AND DATED.

REV.

NOTE: CONTRACTOR IS RESPONSIBLE FOR ROTATING AND COVERING NECESSARY SIGNAL HEADS FOR TRAFFIC PHASING

NOTE: TAPER CHANNELIZERS SHALL HAVE LIGHTS

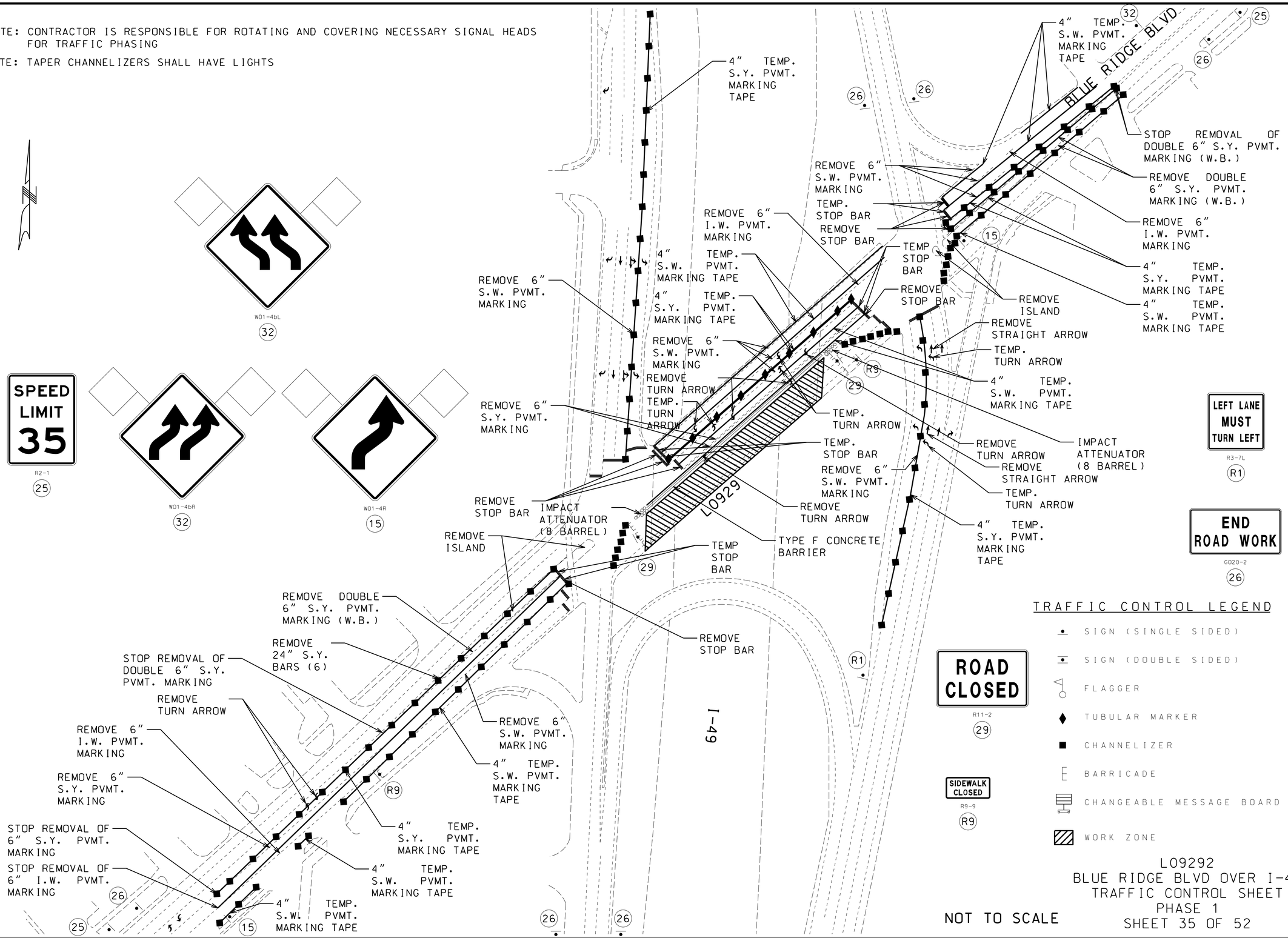

L09292
BLUE RIDGE BLVD OVER I-49
TRAFFIC CONTROL SHEET
PHASE 1
SHEET 35 OF 52

"THIS MEDIA SHOULD NOT BE CONSIDERED A CERTIFIED DOCUMENT."

DATE PREPARED	
12/15/2013	
ROUTE	STATE
VAR.	MO
DISTRICT	SHEET NO.
KC	44
COUNTY	
JACKSON	
JOB NO.	
J4P2191	
CONTRACT ID.	
PROJECT NO.	
BRIDGE NO.	
L09292	

DESCRIPTION

DATE

MISSOURI HIGHWAYS AND TRANSPORTATION COMMISSION
105 WEST CAPITOL
JEFFERSON CITY, MO 65102
1-888-ASK-MODOT (1-888-275-6636)

IF A SEAL IS PRESENT ON THIS SHEET IT HAS BEEN ELECTRONICALLY SEALED AND DATED.

REV.

NOTE: CONTRACTOR IS RESPONSIBLE FOR ROTATING AND COVERING NECESSARY SIGNAL HEADS FOR TRAFFIC PHASING

NOTE: TAPER CHANNELIZERS SHALL HAVE LIGHTS

W01-4bR

(32)

SPEED LIMIT 35

R2-1

(25)

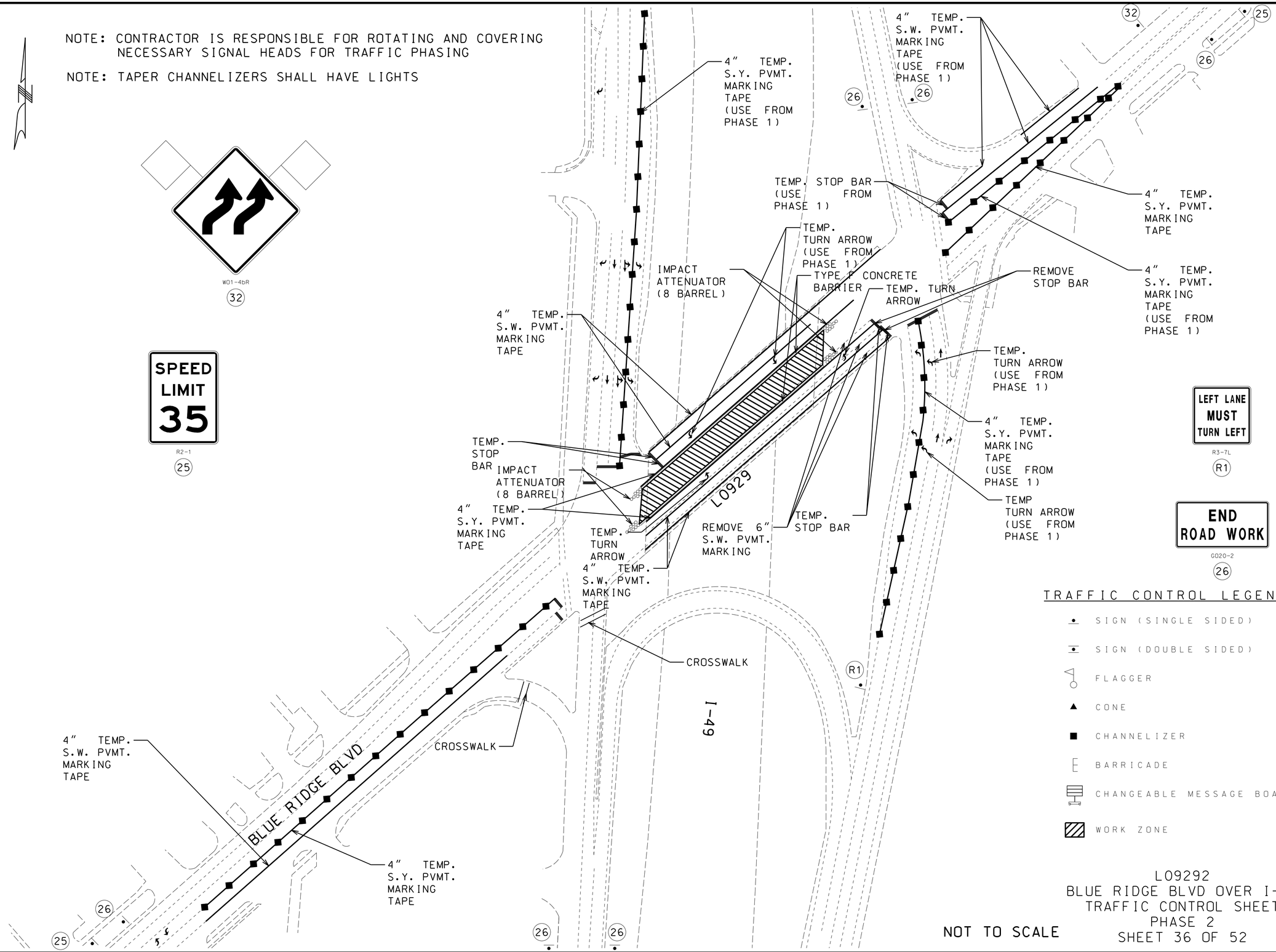

LEFT LANE MUST TURN LEFT

R3-7L

(R1)

END ROAD WORK

G020-2

(26)

TRAFFIC CONTROL LEGEND

- SIGN (SINGLE SIDED)
- SIGN (DOUBLE SIDED)
- FLAGGER
- CONE
- CHANNELIZER
- BARRICADE
- CHANGEABLE MESSAGE BOARD
- WORK ZONE

NOT TO SCALE

L09292
BLUE RIDGE BLVD OVER I-49
TRAFFIC CONTROL SHEET
PHASE 2
SHEET 36 OF 52

"THIS MEDIA SHOULD NOT BE CONSIDERED A CERTIFIED DOCUMENT."

DATE PREPARED	12/15/2013
ROUTE	VAR.
STATE	MO
DISTRICT	KC
SHEET NO.	45
COUNTY	JACKSON
JOB NO.	J4P2191
CONTRACT ID.	
PROJECT NO.	
BRIDGE NO.	L09292

DESCRIPTION

DATE

MISSOURI HIGHWAYS AND TRANSPORTATION COMMISSION

105 WEST CAPITOL
JEFFERSON CITY, MO 65102
1-888-ASK-MODOT (1-888-275-6636)

IF A SEAL IS PRESENT ON THIS SHEET IT HAS BEEN ELECTRONICALLY SEALED AND DATED.

REV.

NOTE: CONTRACTOR IS RESPONSIBLE FOR ROTATING AND COVERING NECESSARY SIGNAL HEADS FOR TRAFFIC PHASING

NOTE: TAPER CHANNELIZERS SHALL HAVE LIGHTS

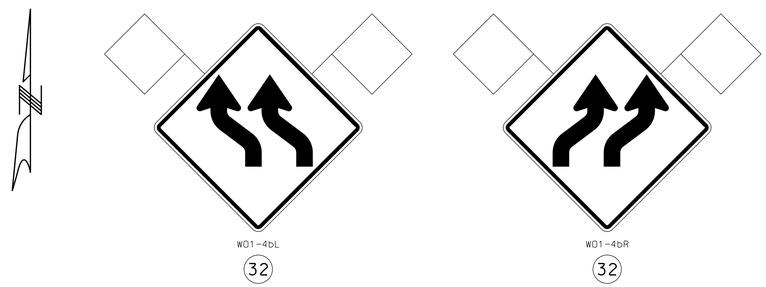

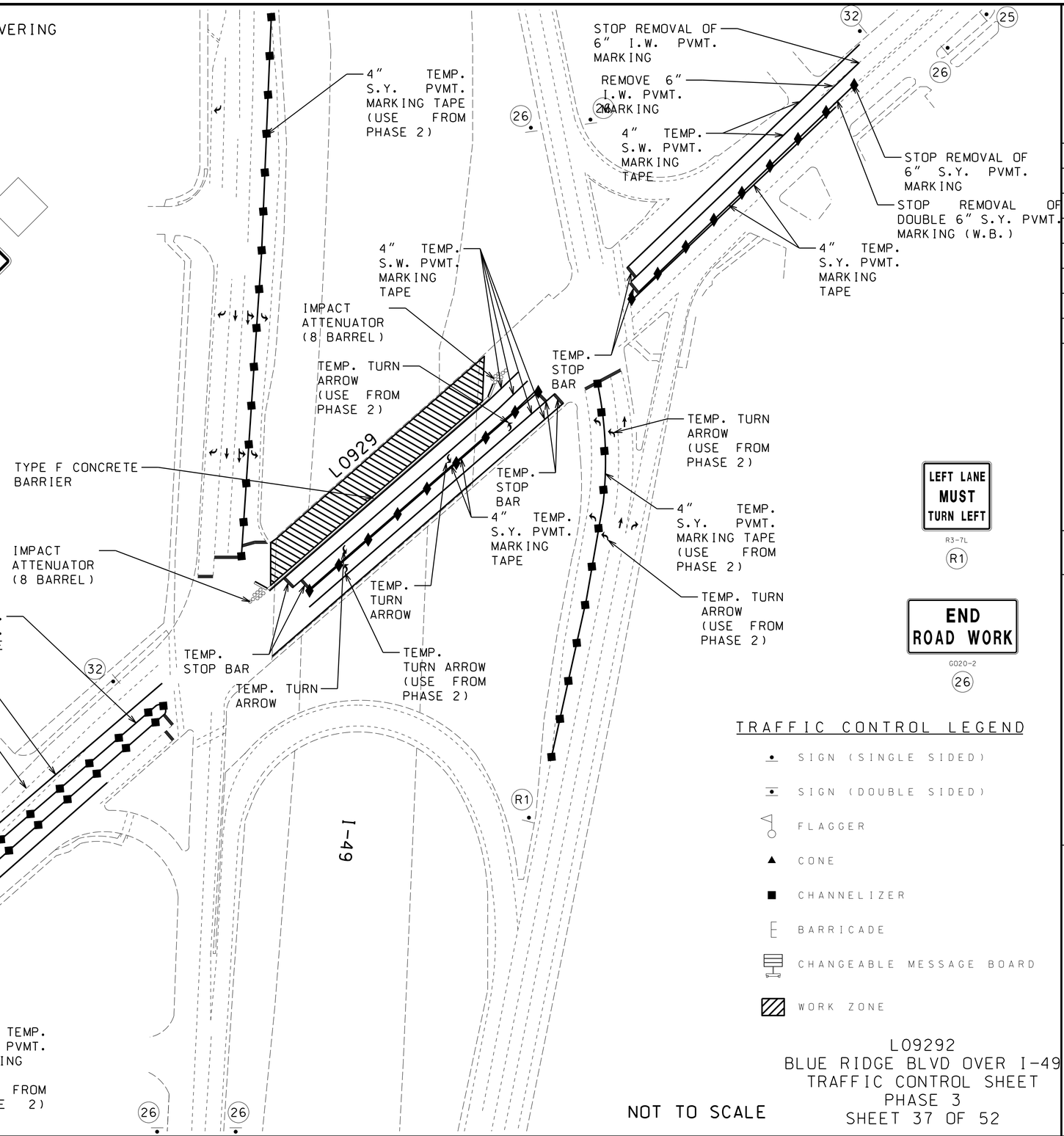

TRAFFIC CONTROL LEGEND

- SIGN (SINGLE SIDED)
- SIGN (DOUBLE SIDED)
- FLAGGER
- CONE
- CHANNELIZER
- BARRICADE
- CHANGEABLE MESSAGE BOARD
- WORK ZONE

NOT TO SCALE

L09292
BLUE RIDGE BLVD OVER I-49
TRAFFIC CONTROL SHEET
PHASE 3
SHEET 37 OF 52

"THIS MEDIA SHOULD NOT BE CONSIDERED A CERTIFIED DOCUMENT."

DATE PREPARED	
12/15/2013	
ROUTE	STATE
VAR.	MO
DISTRICT	SHEET NO.
KC	46
COUNTY	
JACKSON	
JOB NO.	
J4P2191	
CONTRACT ID.	
PROJECT NO.	
BRIDGE NO.	
L09292	

DESCRIPTION

DATE

MISSOURI HIGHWAYS AND TRANSPORTATION COMMISSION

105 WEST CAPITOL
JEFFERSON CITY, MO 65102
1-888-ASK-MODOT (1-888-275-6636)

IF A SEAL IS PRESENT ON THIS SHEET IT HAS BEEN ELECTRONICALLY SEALED AND DATED.

REV.

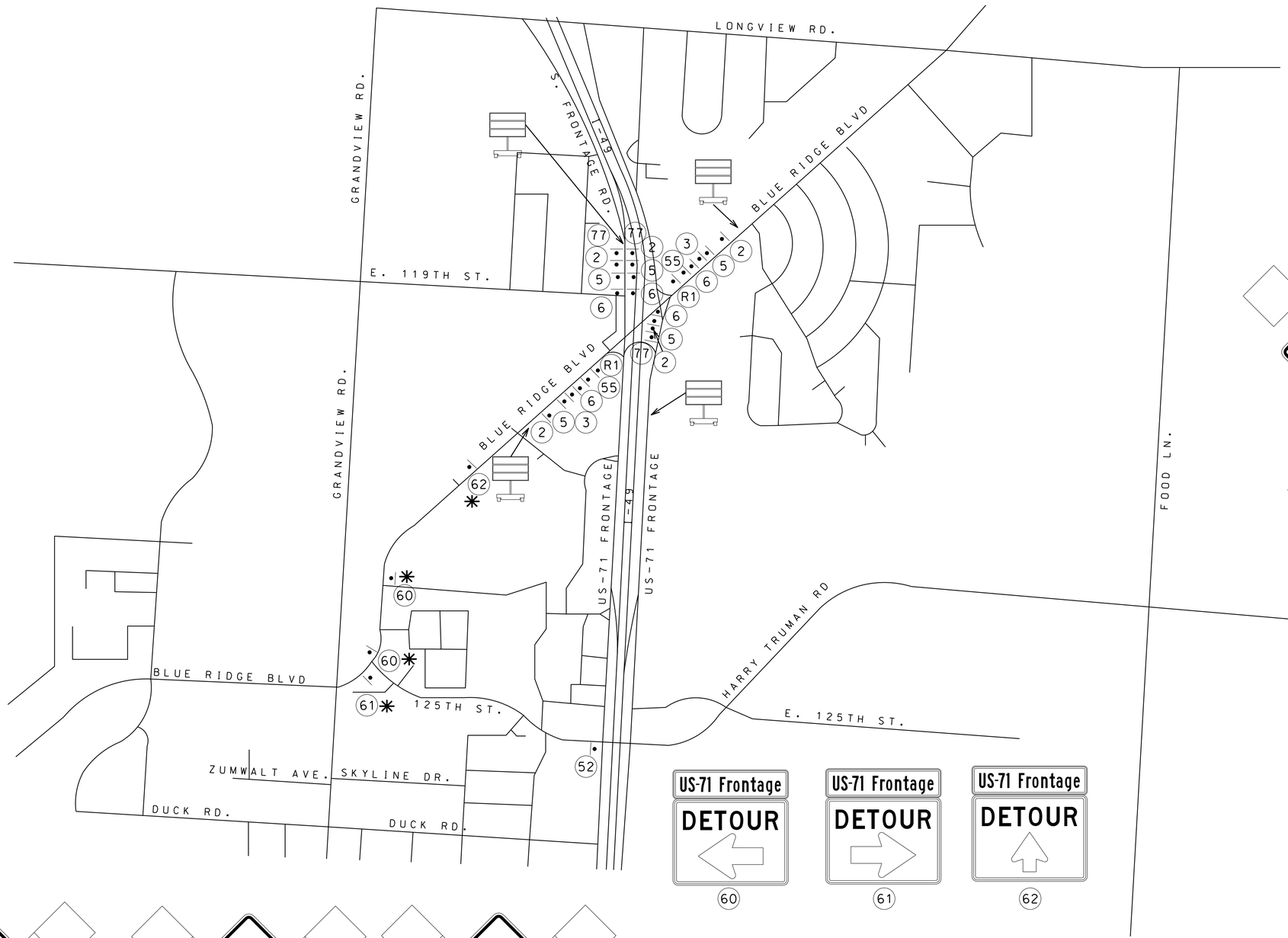

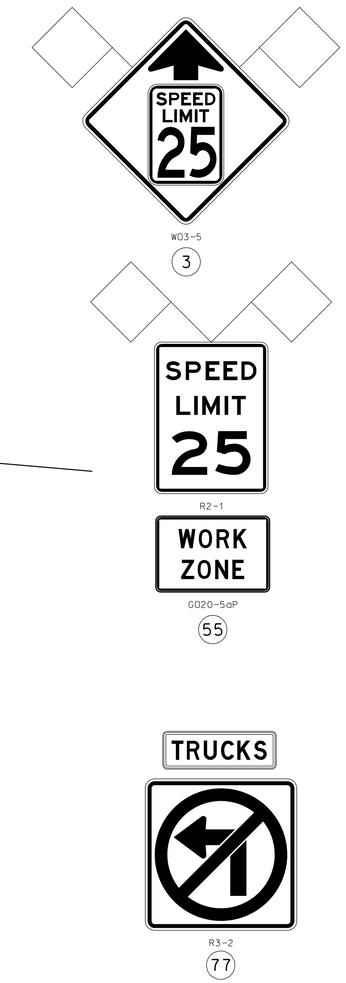

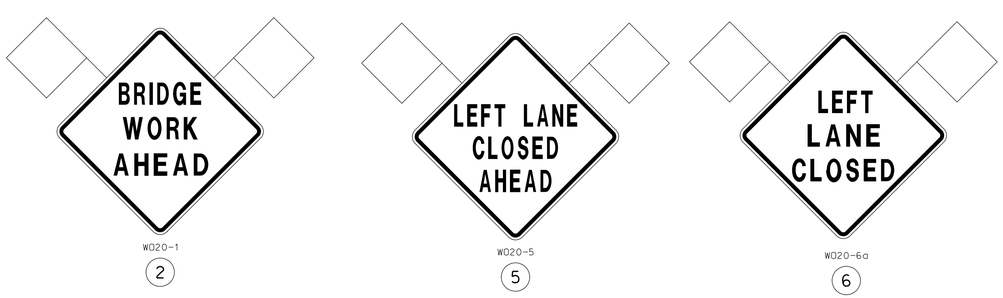

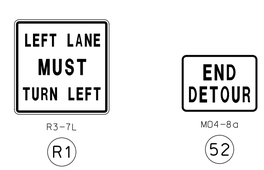

✳ PHASE 1

NOT TO SCALE

L09292
BLUE RIDGE BLVD OVER I-49
TRAFFIC CONTROL SHEET
SHEET 38 OF 52

"THIS MEDIA SHOULD NOT BE CONSIDERED A CERTIFIED DOCUMENT."

DATE PREPARED	12/15/2013
ROUTE	VAR.
STATE	MO
DISTRICT	KC
SHEET NO.	47
COUNTY	JACKSON
JOB NO.	J4P2191
CONTRACT ID.	
PROJECT NO.	
BRIDGE NO.	L09292

DATE	DESCRIPTION

MISSOURI HIGHWAYS AND TRANSPORTATION COMMISSION
105 WEST CAPITOL
JEFFERSON CITY, MO 65102
1-888-ASK-MODOT (1-888-275-6636)

IF A SEAL IS PRESENT ON THIS SHEET IT HAS BEEN ELECTRONICALLY SEALED AND DATED.

REV.

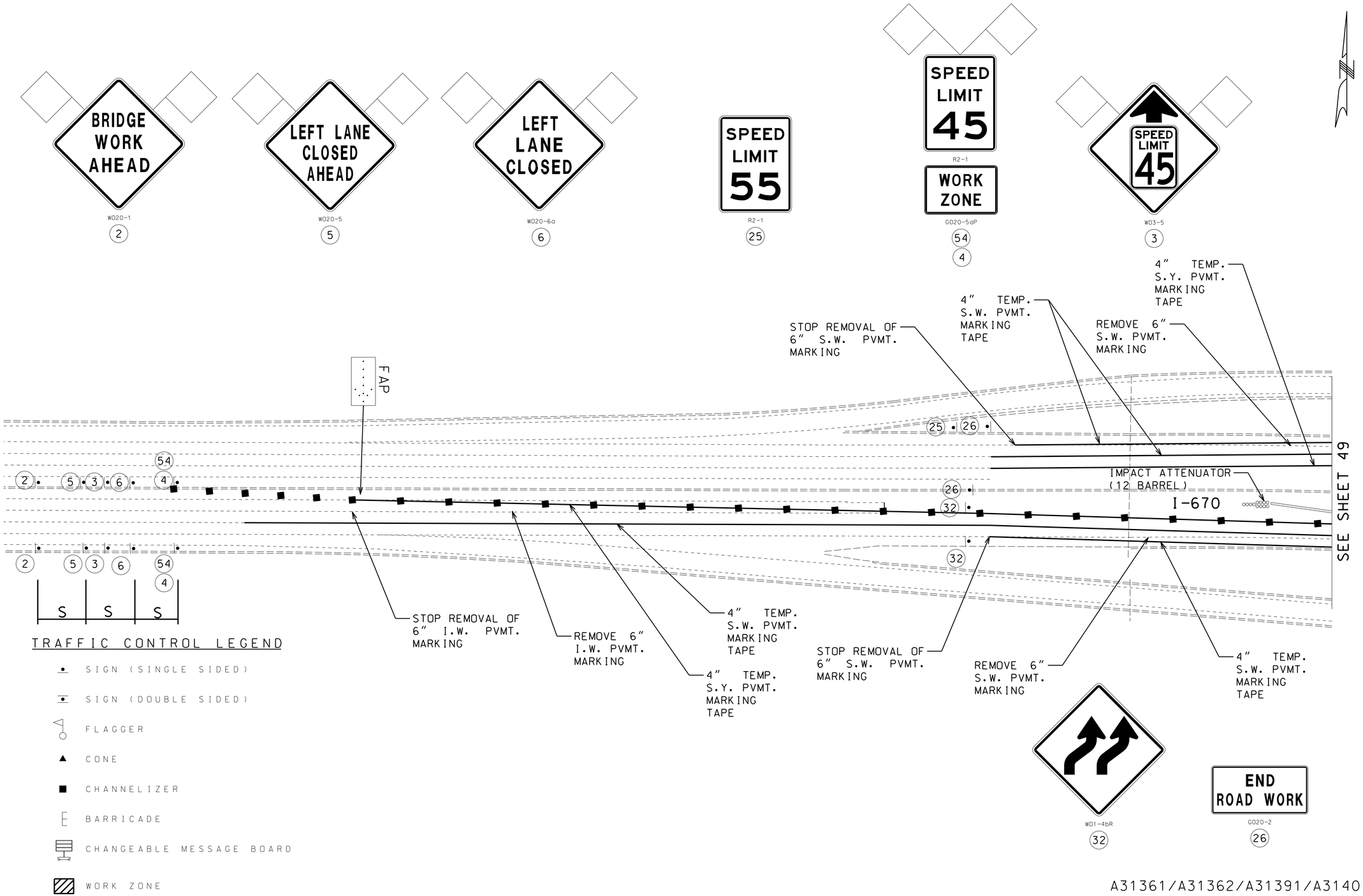

NOT TO SCALE

NOTE: REFER TO TRAFFIC CONTROL SHEET 1 OF 52 FOR SIGN SPACING

A31361/A31362/A31391/A31401
I-670/RAMPS OVER VARIOUS STREETS
TRAFFIC CONTROL SHEET
PHASE 1
SHEET 39 OF 52

"THIS MEDIA SHOULD NOT BE CONSIDERED A CERTIFIED DOCUMENT."

DATE PREPARED	12/15/2013
ROUTE	VAR.
STATE	MO
DISTRICT	KC
SHEET NO.	48
COUNTY	JACKSON
JOB NO.	J4P2191
CONTRACT ID.	
PROJECT NO.	
BRIDGE NO.	A31361/A31362 A31391/A31401

DESCRIPTION | DATE

MISSOURI HIGHWAYS AND TRANSPORTATION COMMISSION
105 WEST CAPITOL
JEFFERSON CITY, MO 65102
1-888-ASK-MODOT (1-888-275-6636)

IF A SEAL IS PRESENT ON THIS SHEET IT HAS BEEN ELECTRONICALLY SEALED AND DATED.

REV.

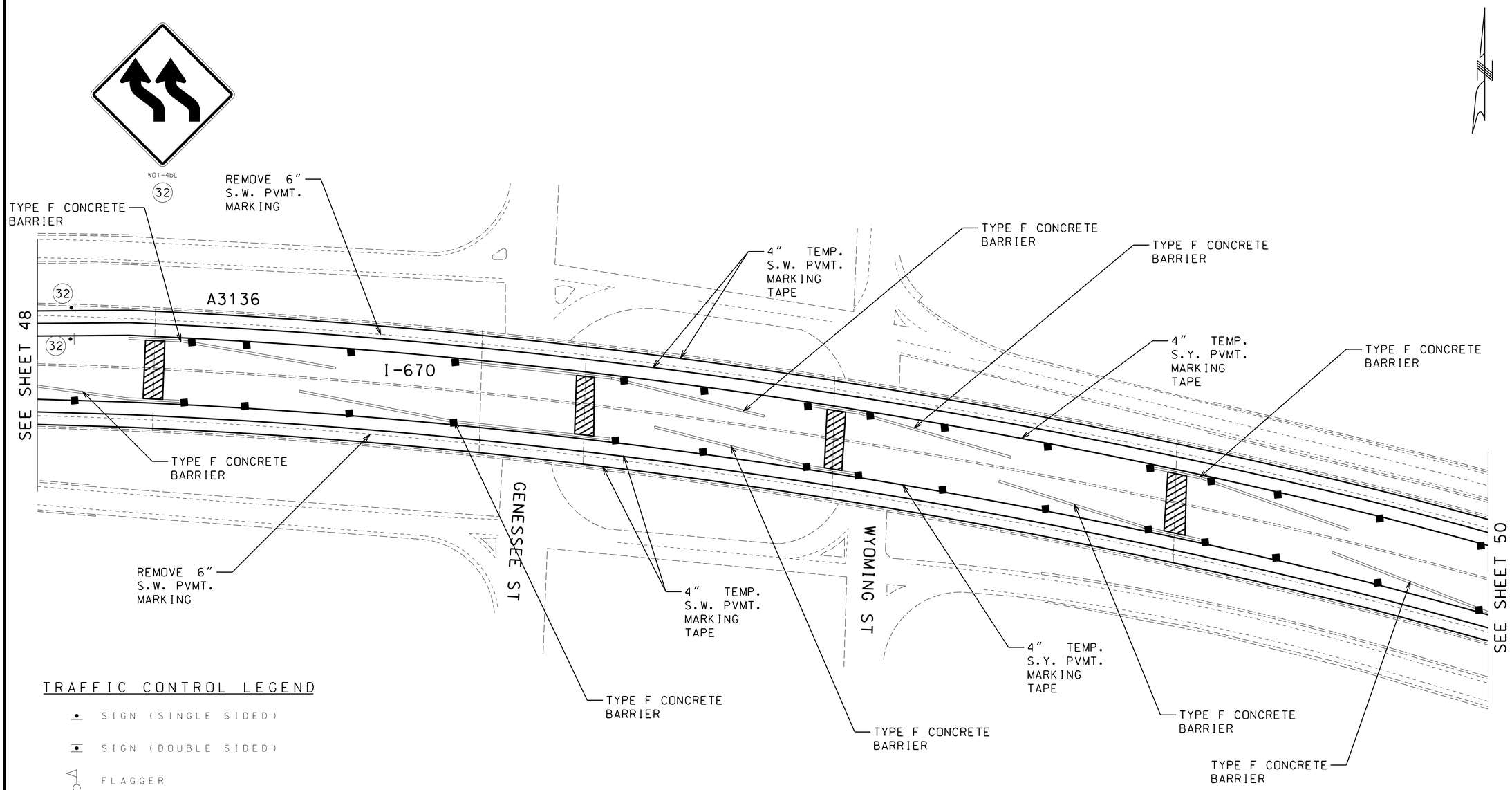

TRAFFIC CONTROL LEGEND

- SIGN (SINGLE SIDED)
- SIGN (DOUBLE SIDED)
- FLAGGER
- CONE
- CHANNELIZER
- BARRICADE
- CHANGEABLE MESSAGE BOARD
- WORK ZONE

NOT TO SCALE

A31361/A31362/A31391/A31401
I-670/RAMPS OVER VARIOUS STREETS
TRAFFIC CONTROL SHEET
PHASE 1
SHEET 40 OF 52

"THIS MEDIA SHOULD NOT BE CONSIDERED A CERTIFIED DOCUMENT."

DATE PREPARED	
12/15/2013	
ROUTE	STATE
VAR.	MO
DISTRICT	SHEET NO.
KC	49
COUNTY	
JACKSON	
JOB NO.	
J4P2191	
CONTRACT ID.	
PROJECT NO.	
BRIDGE NO.	
A31361/A31362 A31391/A31401	

DATE	DESCRIPTION

MISSOURI HIGHWAYS AND TRANSPORTATION COMMISSION
105 WEST CAPITOL
JEFFERSON CITY, MO 65102
1-888-ASK-MODOT (1-888-275-6636)

IF A SEAL IS PRESENT ON THIS SHEET IT HAS BEEN ELECTRONICALLY SEALED AND DATED.

REV.

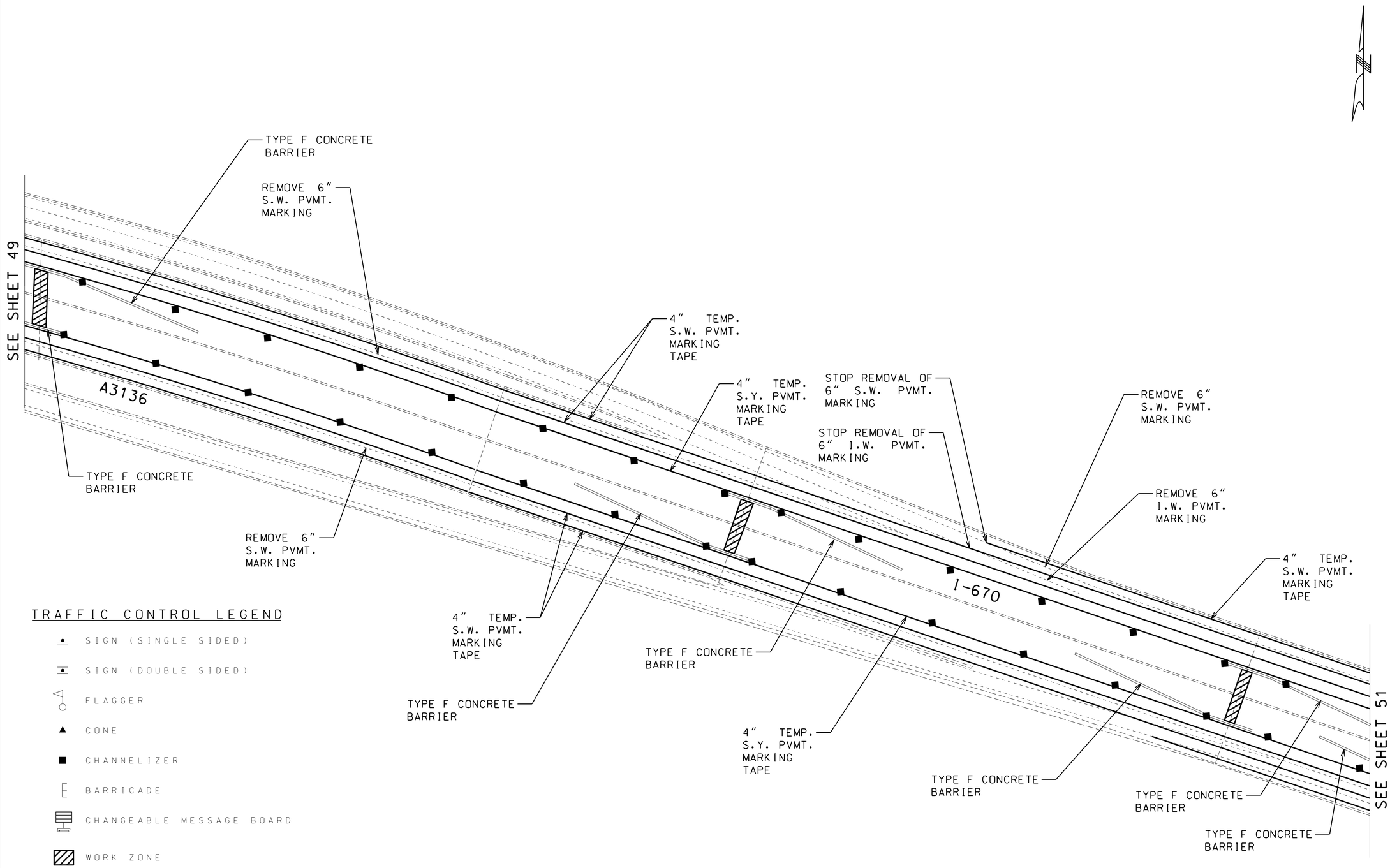

TRAFFIC CONTROL LEGEND

- SIGN (SINGLE SIDED)
- SIGN (DOUBLE SIDED)
- FLAGGER
- CONE
- CHANNELIZER
- BARRICADE
- CHANGEABLE MESSAGE BOARD
- WORK ZONE

NOT TO SCALE

A31361/A31362/A31391/A31401
I-670/RAMPS OVER VARIOUS STREETS
TRAFFIC CONTROL SHEET
PHASE 1
SHEET 41 OF 52

"THIS MEDIA SHOULD NOT BE CONSIDERED A CERTIFIED DOCUMENT."

DATE PREPARED	
12/15/2013	
ROUTE	STATE
VAR.	MO
DISTRICT	SHEET NO.
KC	50
COUNTY	
JACKSON	
JOB NO.	
J4P2191	
CONTRACT ID.	
PROJECT NO.	
BRIDGE NO.	
A31361/A31362 A31391/A31401	

DATE	DESCRIPTION

MISSOURI HIGHWAYS AND TRANSPORTATION COMMISSION
105 WEST CAPITOL
JEFFERSON CITY, MO 65102
1-888-ASK-MODOT (1-888-275-6636)

IF A SEAL IS PRESENT ON THIS SHEET IT HAS BEEN ELECTRONICALLY SEALED AND DATED.

REV.

TRAFFIC CONTROL LEGEND

- SIGN (SINGLE SIDED)
- SIGN (DOUBLE SIDED)
- FLAGGER
- CONE
- CHANNELIZER
- BARRICADE
- CHANGEABLE MESSAGE BOARD
- WORK ZONE

NOT TO SCALE

NOTE: TAPER CHANNELIZERS SHALL HAVE LIGHTS

NOTE: REFER TO TRAFFIC CONTROL SHEET 1 OF 52 FOR SIGN SPACING

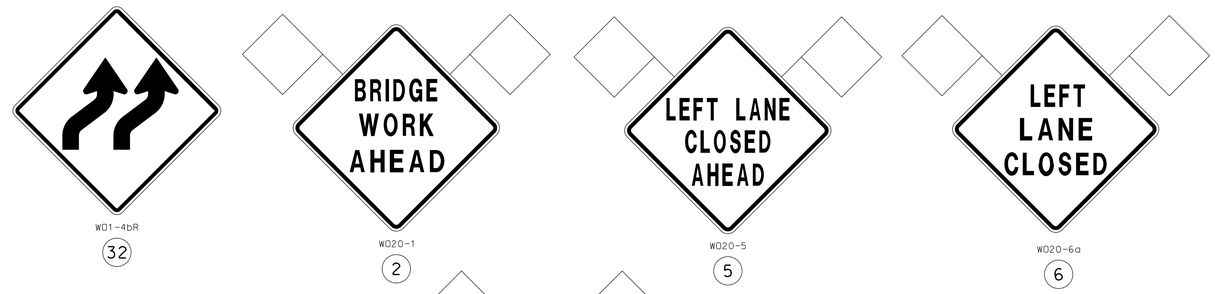

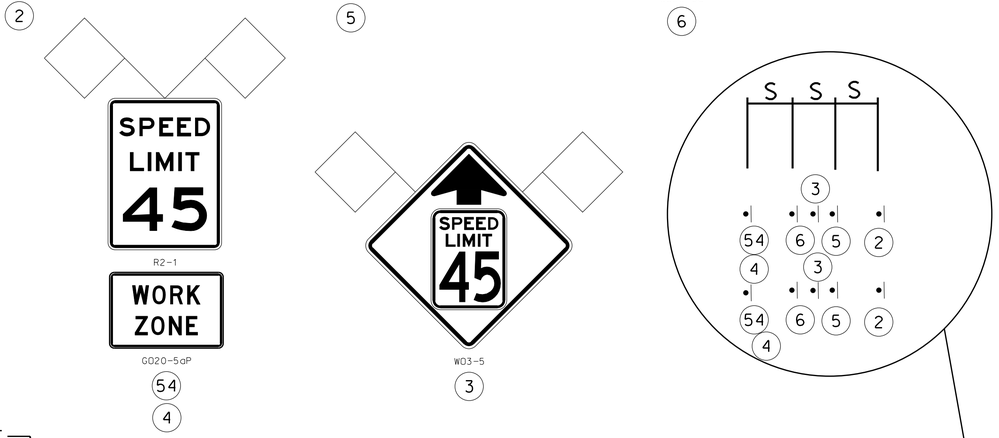

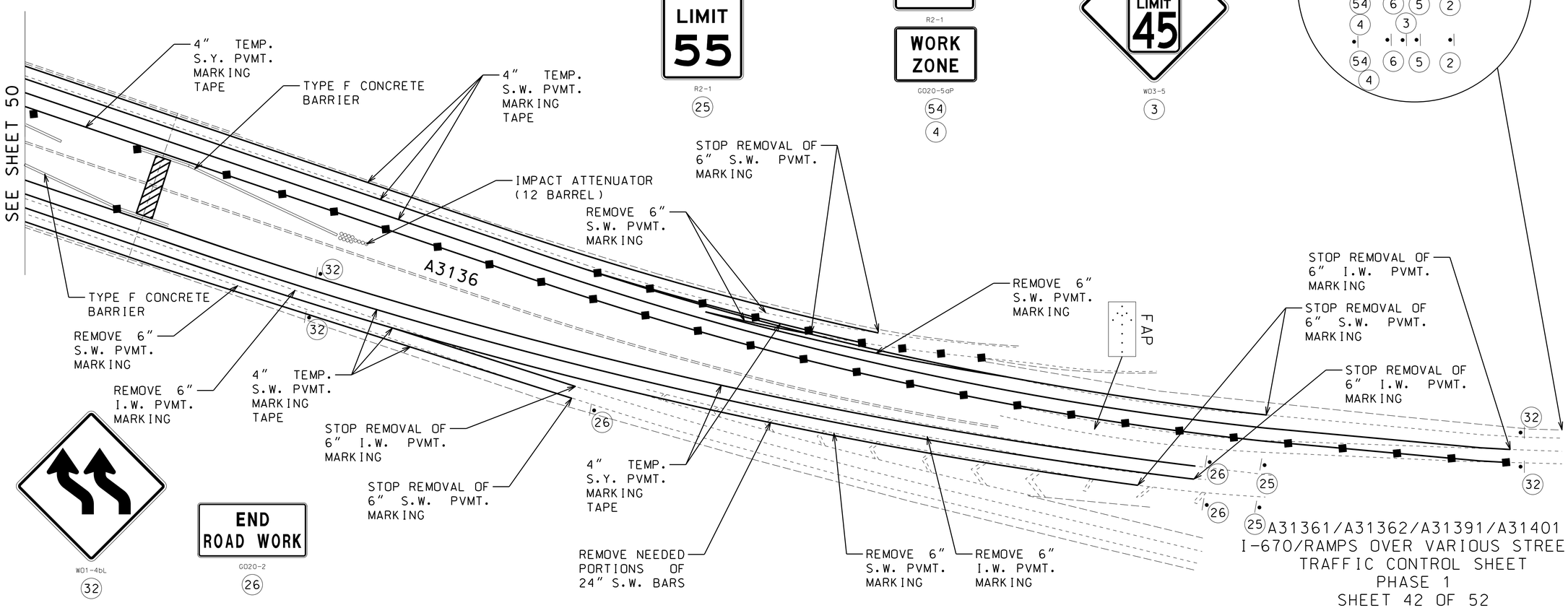

A31361/A31362/A31391/A31401
I-670/RAMPS OVER VARIOUS STREETS
TRAFFIC CONTROL SHEET
PHASE 1
SHEET 42 OF 52

"THIS MEDIA SHOULD NOT BE CONSIDERED A CERTIFIED DOCUMENT."

DATE PREPARED	12/15/2013
ROUTE	VAR.
STATE	MO
DISTRICT	KC
SHEET NO.	51
COUNTY	JACKSON
JOB NO.	J4P2191
CONTRACT ID.	
PROJECT NO.	
BRIDGE NO.	A31361/A31362 A31391/A31401

DESCRIPTION

DATE

MISSOURI HIGHWAYS AND TRANSPORTATION COMMISSION

105 WEST CAPITOL
JEFFERSON CITY, MO 65102
1-888-ASK-MODOT (1-888-275-6636)

IF A SEAL IS PRESENT ON THIS SHEET IT HAS BEEN ELECTRONICALLY SEALED AND DATED.

REV.

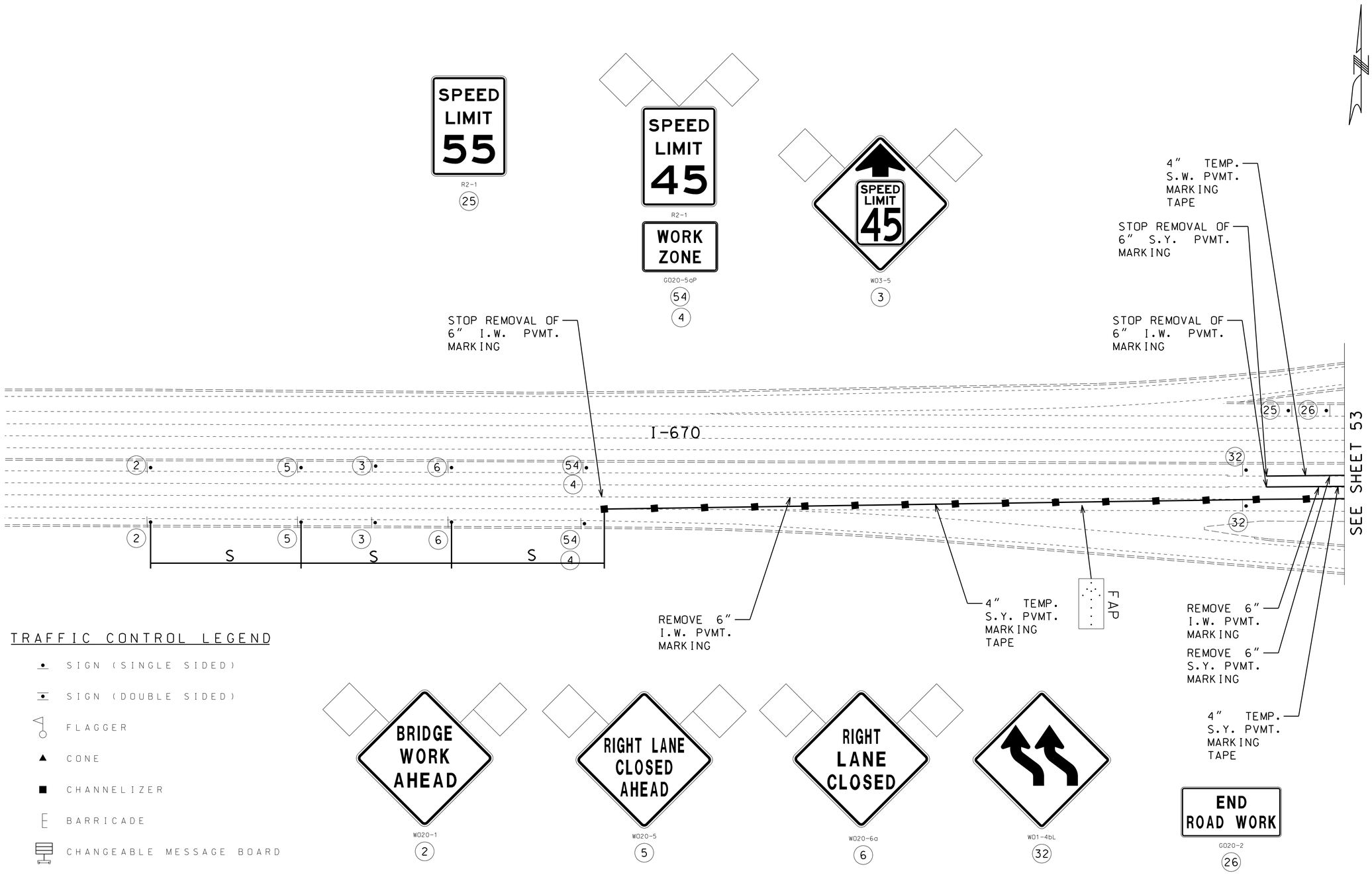

TRAFFIC CONTROL LEGEND

- SIGN (SINGLE SIDED)
- SIGN (DOUBLE SIDED)
- FLAGGER
- CONE
- CHANNELIZER
- BARRICADE
- CHANGEABLE MESSAGE BOARD
- WORK ZONE

NOT TO SCALE

NOTE: REFER TO TRAFFIC CONTROL SHEET 1 OF 52 FOR SIGN SPACING
NOTE: TAPER CHANNELIZERS SHALL HAVE LIGHTS

A31361/A31362/A31391/A31401
I-670/RAMPS OVER VARIOUS STREETS
TRAFFIC CONTROL SHEET
PHASE 2
SHEET 43 OF 52

"THIS MEDIA SHOULD NOT BE CONSIDERED A CERTIFIED DOCUMENT."

DATE PREPARED	12/15/2013
ROUTE	VAR.
STATE	MO
DISTRICT	KC
SHEET NO.	52
COUNTY	JACKSON
JOB NO.	J4P2191
CONTRACT ID.	
PROJECT NO.	
BRIDGE NO.	A31361/A31362 A31391/A31401

DESCRIPTION	DATE

MISSOURI HIGHWAYS AND TRANSPORTATION COMMISSION
105 WEST CAPITOL
JEFFERSON CITY, MO 65102
1-888-ASK-MODOT (1-888-275-6636)

IF A SEAL IS PRESENT ON THIS SHEET IT HAS BEEN ELECTRONICALLY SEALED AND DATED.

REV.

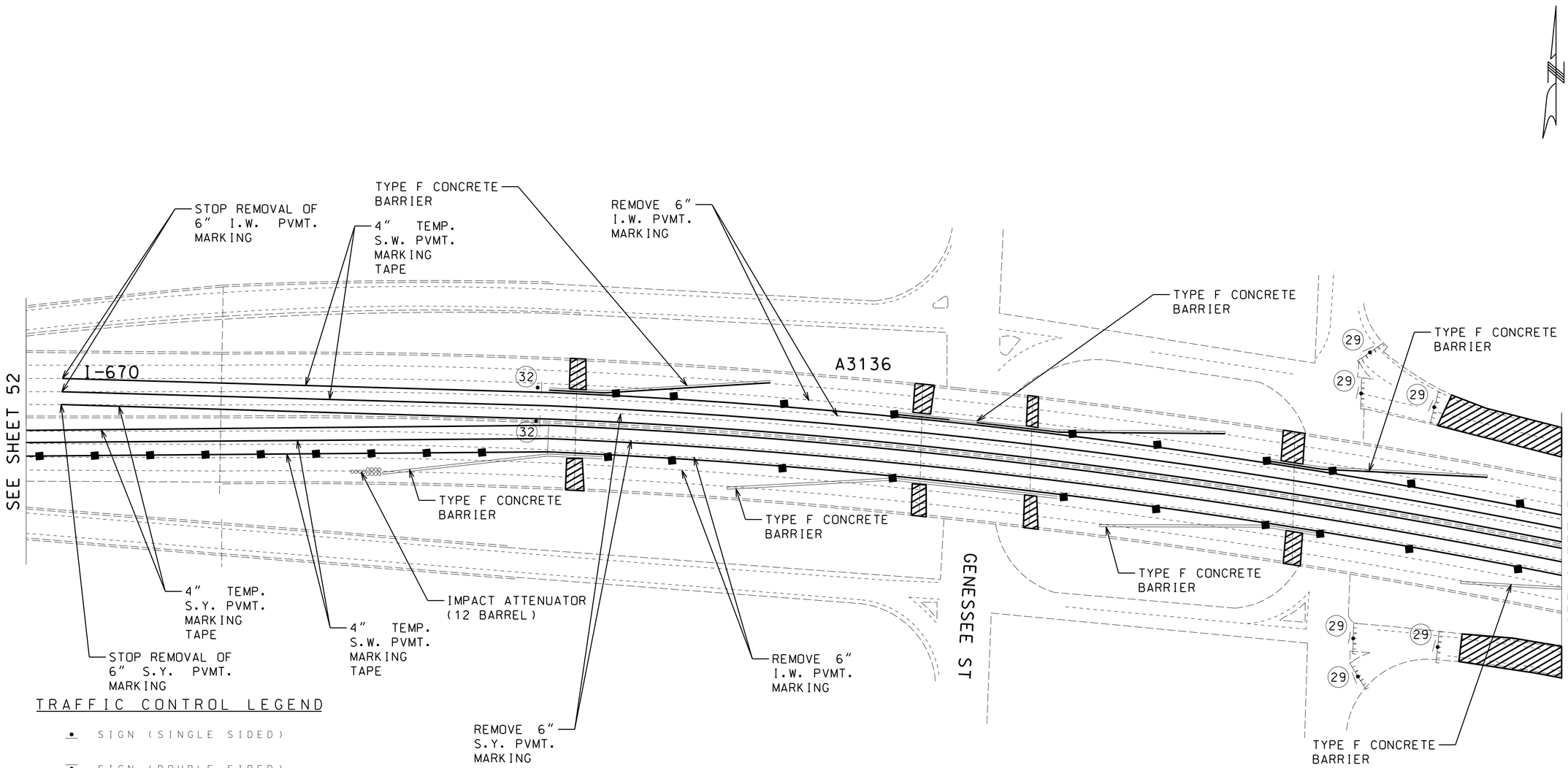

TRAFFIC CONTROL LEGEND

- SIGN (SINGLE SIDED)
- SIGN (DOUBLE SIDED)
- FLAGGER
- CONE
- CHANNELIZER
- BARRICADE
- CHANGEABLE MESSAGE BOARD
- WORK ZONE

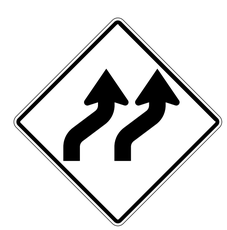

W01-4bR

32

R11-2

29

NOT TO SCALE

A31361/A31362/A31391/A31401
I-670/RAMPS OVER VARIOUS STREETS
TRAFFIC CONTROL SHEET
PHASE 2
SHEET 44 OF 52

"THIS MEDIA SHOULD NOT BE CONSIDERED A CERTIFIED DOCUMENT."

DATE PREPARED	12/15/2013
ROUTE	VAR.
STATE	MO
DISTRICT	KC
SHEET NO.	53
COUNTY	JACKSON
JOB NO.	J4P2191
CONTRACT ID.	
PROJECT NO.	
BRIDGE NO.	A31361/A31362 A31391/A31401

DATE	DESCRIPTION

MISSOURI HIGHWAYS AND TRANSPORTATION COMMISSION

105 WEST CAPITOL
JEFFERSON CITY, MO 65102
1-888-ASK-MODOT (1-888-275-6636)

IF A SEAL IS PRESENT ON THIS SHEET IT HAS BEEN ELECTRONICALLY SEALED AND DATED.

REV.

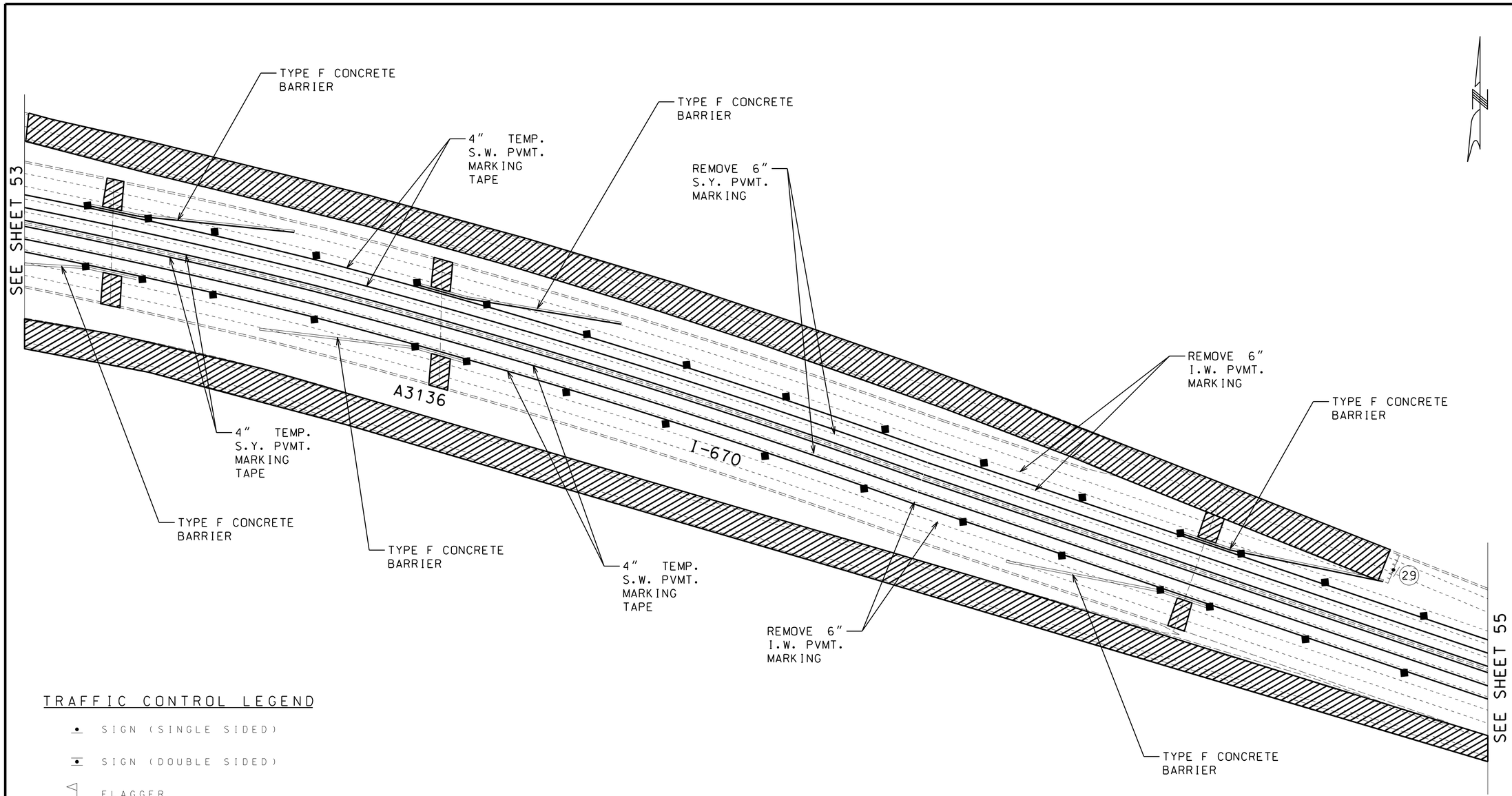

TRAFFIC CONTROL LEGEND

- SIGN (SINGLE SIDED)
- SIGN (DOUBLE SIDED)
- FLAGGER
- CONE
- CHANNELIZER
- BARRICADE
- CHANGEABLE MESSAGE BOARD
- WORK ZONE

NOT TO SCALE

A31361/A31362/A31391/A31401
I-670/RAMPS OVER VARIOUS STREETS
TRAFFIC CONTROL SHEET
PHASE 2
SHEET 45 OF 52

"THIS MEDIA SHOULD NOT BE CONSIDERED A CERTIFIED DOCUMENT."

DATE PREPARED	
12/15/2013	
ROUTE	STATE
VAR.	MO
DISTRICT	SHEET NO.
KC	54
COUNTY	
JACKSON	
JOB NO.	
J4P2191	
CONTRACT ID.	
PROJECT NO.	
BRIDGE NO.	
A31361/A31362 A31391/A31401	

DESCRIPTION	DATE

MISSOURI HIGHWAYS AND TRANSPORTATION COMMISSION
105 WEST CAPITOL
JEFFERSON CITY, MO 65102
1-888-ASK-MODOT (1-888-275-6636)

IF A SEAL IS PRESENT ON THIS SHEET IT HAS BEEN ELECTRONICALLY SEALED AND DATED.

REV.

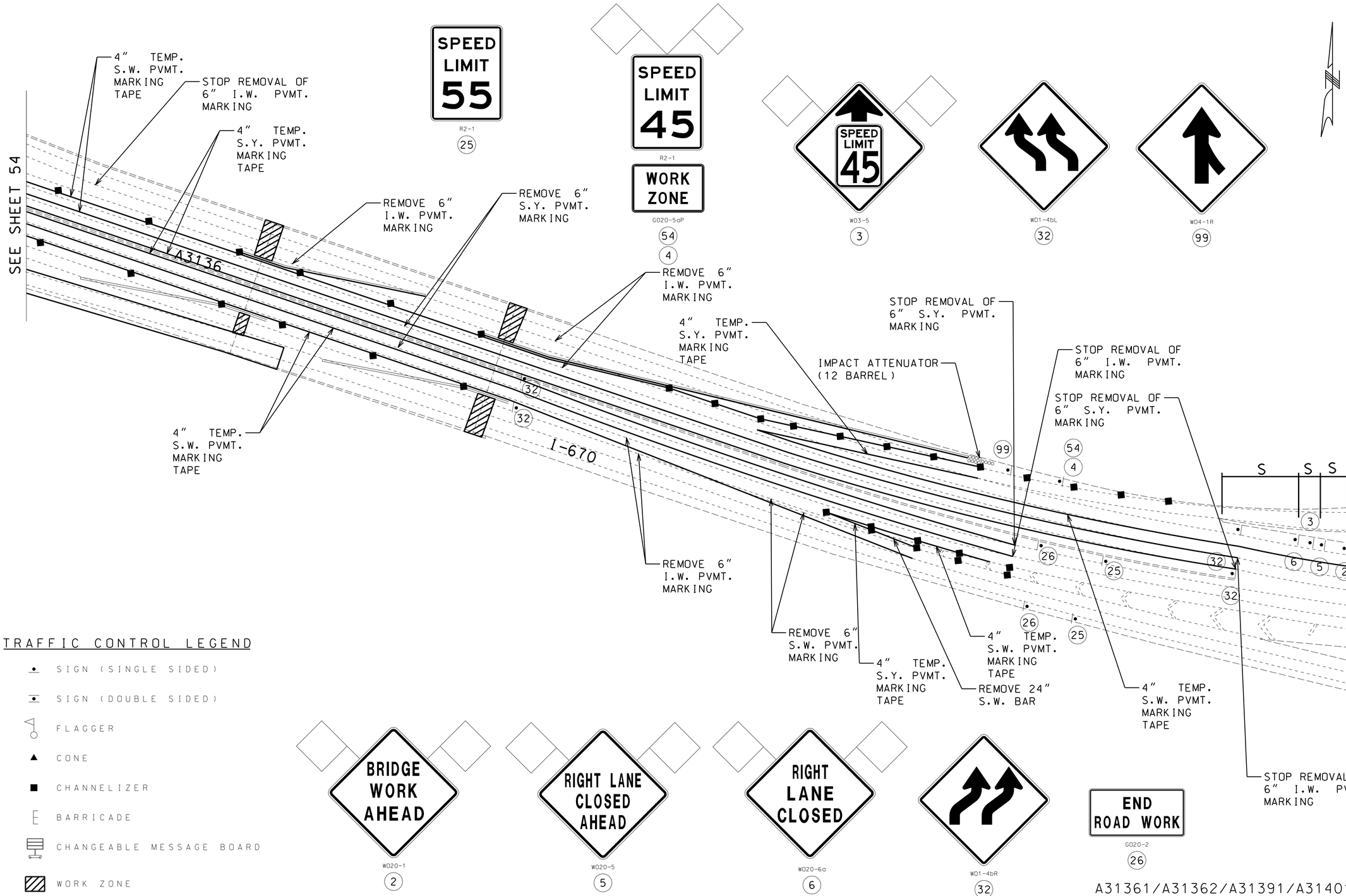

NOT TO SCALE

NOTE: REFER TO TRAFFIC CONTROL SHEET 1 OF 52 FOR SIGN SPACING
NOTE: TAPER CHANNELIZERS SHALL HAVE LIGHTS

A31361/A31362/A31391/A31401
I-670/RAMPS OVER VARIOUS STREETS
TRAFFIC CONTROL SHEET
PHASE 2
SHEET 46 OF 52

"THIS MEDIA SHOULD NOT BE CONSIDERED A CERTIFIED DOCUMENT."

DATE PREPARED	
12/15/2013	
ROUTE VAR.	STATE MO
DISTRICT KC	SHEET NO. 55
COUNTY JACKSON	
JOB NO. J4P2191	
CONTRACT ID.	
PROJECT NO.	
BRIDGE NO. A31361/A31362 A31391/A31401	

DESCRIPTION | DATE

MISSOURI HIGHWAYS AND TRANSPORTATION COMMISSION
105 WEST CAPITOL
JEFFERSON CITY, MO 65102
1-888-ASK-MODOT (1-888-275-6636)

IF A SEAL IS PRESENT ON THIS SHEET IT HAS BEEN ELECTRONICALLY SEALED AND DATED.

REV.

NOTE: CONTRACTOR SHALL BE RESPONSIBLE FOR ROTATING AND COVERING NECESSARY SIGNAL HEADS FOR TRAFFIC PHASING

NOTE: REFER TO TRAFFIC CONTROL SHEET 1 OF 52 FOR SIGN SPACING

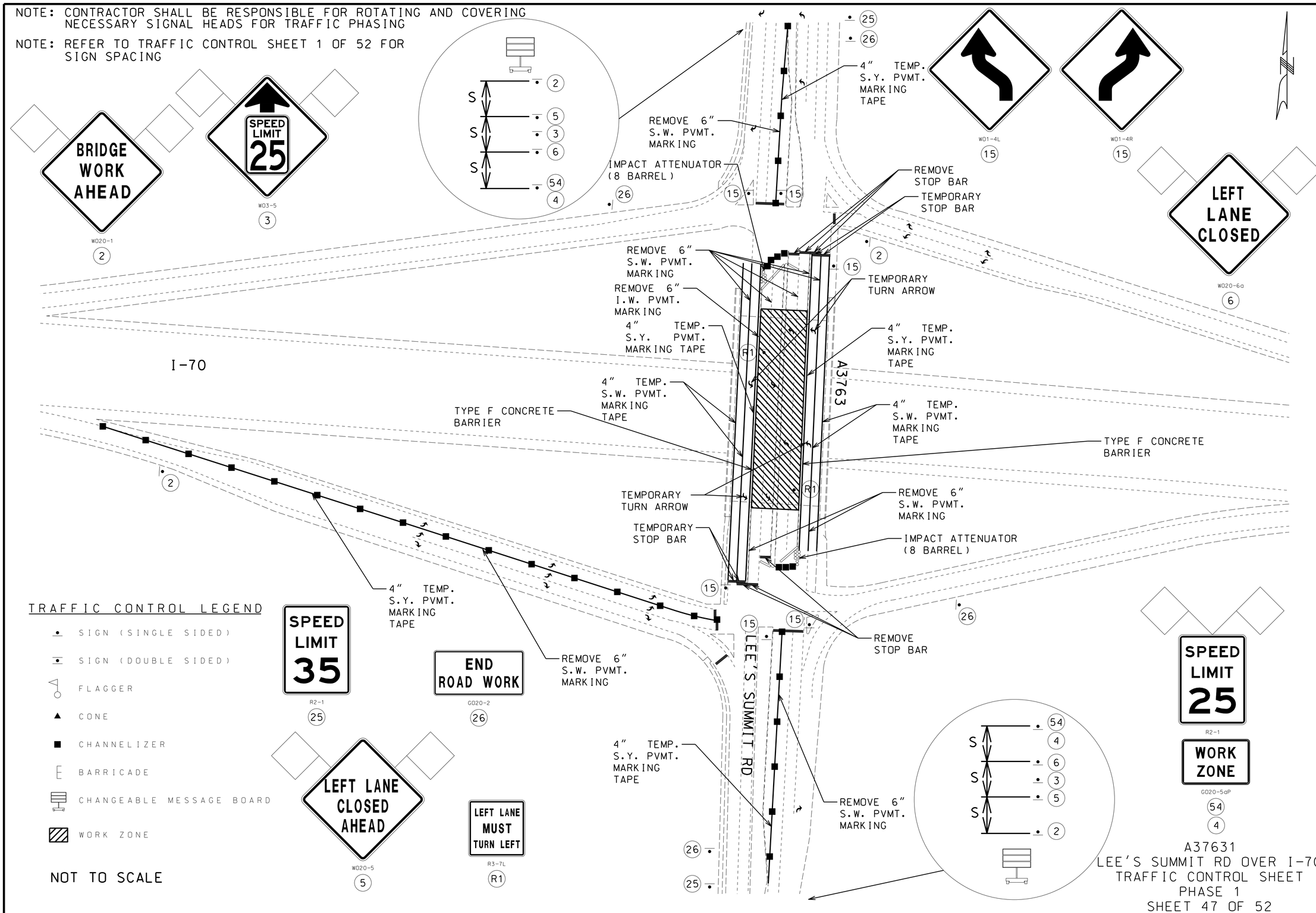

TRAFFIC CONTROL LEGEND

- SIGN (SINGLE SIDED)
- SIGN (DOUBLE SIDED)
- FLAGGER
- CONE
- CHANNELIZER
- BARRICADE
- CHANGEABLE MESSAGE BOARD
- WORK ZONE

NOT TO SCALE

A37631
LEE'S SUMMIT RD OVER I-70
TRAFFIC CONTROL SHEET
PHASE 1
SHEET 47 OF 52

"THIS MEDIA SHOULD NOT BE CONSIDERED A CERTIFIED DOCUMENT."

DATE PREPARED	
12/15/2013	
ROUTE	STATE
VAR.	MO
DISTRICT	SHEET NO.
KC	56
COUNTY	
JACKSON	
JOB NO.	
J4P2191	
CONTRACT ID.	
PROJECT NO.	
BRIDGE NO.	
A37631	

DATE	DESCRIPTION

MISSOURI HIGHWAYS AND TRANSPORTATION COMMISSION
105 WEST CAPITOL
JEFFERSON CITY, MO 65102
1-888-ASK-MODOT (1-888-275-6636)

IF A SEAL IS PRESENT ON THIS SHEET IT HAS BEEN ELECTRONICALLY SEALED AND DATED.

REV.

NOTE: CONTRACTOR SHALL BE RESPONSIBLE FOR ROTATING AND COVERING NECESSARY SIGNAL HEADS FOR TRAFFIC PHASING

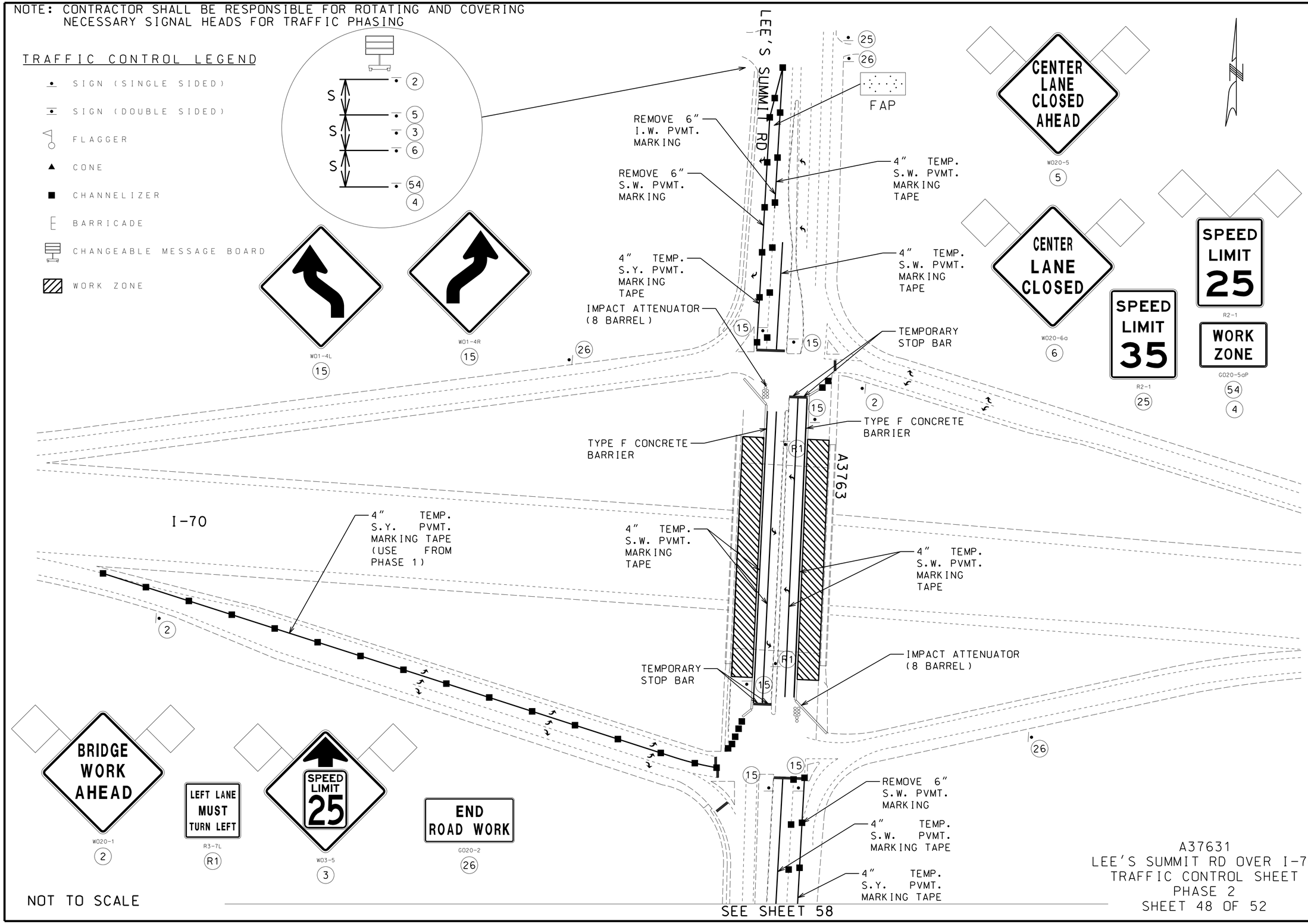

NOT TO SCALE

A37631
LEE'S SUMMIT RD OVER I-70
TRAFFIC CONTROL SHEET
PHASE 2
SHEET 48 OF 52

"THIS MEDIA SHOULD NOT BE CONSIDERED A CERTIFIED DOCUMENT."

DATE PREPARED	12/15/2013
ROUTE	VAR.
STATE	MO
DISTRICT	KC
SHEET NO.	57
COUNTY	JACKSON
JOB NO.	J4P2191
CONTRACT ID.	
PROJECT NO.	
BRIDGE NO.	A37631

DESCRIPTION

DATE

MISSOURI HIGHWAYS AND TRANSPORTATION COMMISSION

105 WEST CAPITOL
JEFFERSON CITY, MO 65102
1-888-ASK-MODOT (1-888-275-6636)

IF A SEAL IS PRESENT ON THIS SHEET IT HAS BEEN ELECTRONICALLY SEALED AND DATED.

REV.

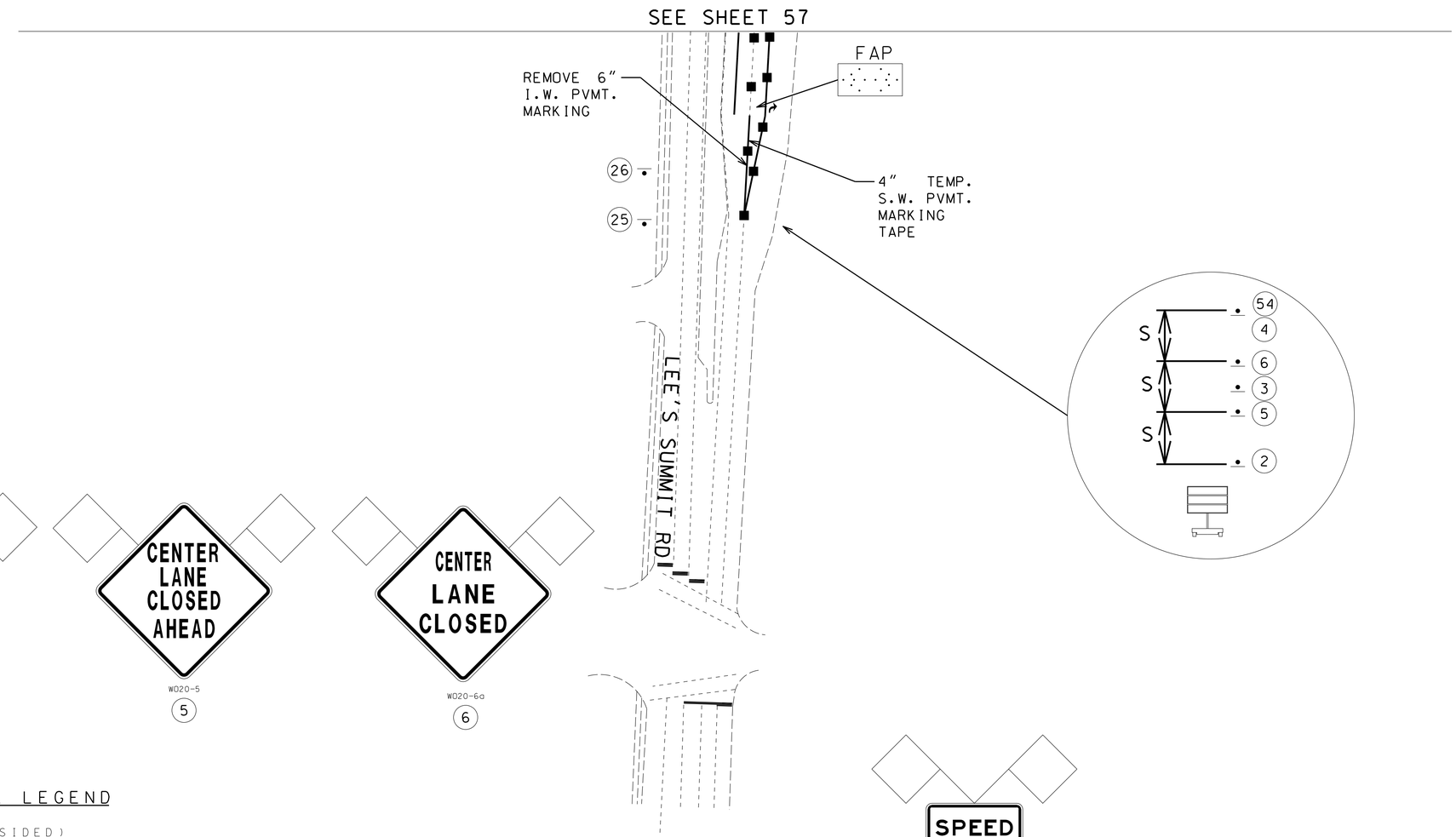

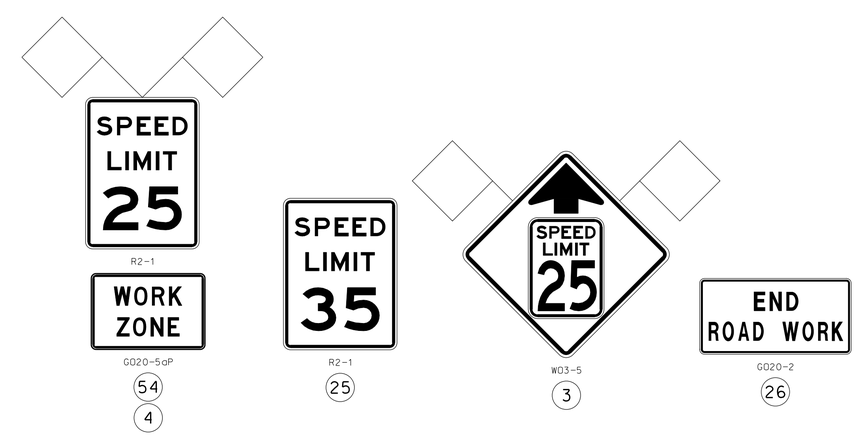

TRAFFIC CONTROL LEGEND

- SIGN (SINGLE SIDED)
- SIGN (DOUBLE SIDED)
- FLAGGER
- CONE
- CHANNELIZER
- BARRICADE
- CHANGEABLE MESSAGE BOARD
- WORK ZONE

NOT TO SCALE

A37631
LEE'S SUMMIT RD OVER I-70
TRAFFIC CONTROL SHEET
PHASE 2
SHEET 49 OF 52

"THIS MEDIA SHOULD NOT BE CONSIDERED A CERTIFIED DOCUMENT."

DATE PREPARED	12/15/2013
ROUTE	VAR.
STATE	MO
DISTRICT	KC
SHEET NO.	58
COUNTY	JACKSON
JOB NO.	J4P2191
CONTRACT ID.	
PROJECT NO.	
BRIDGE NO.	A37631

DATE	DESCRIPTION

MISSOURI HIGHWAYS AND TRANSPORTATION COMMISSION
105 WEST CAPITOL
JEFFERSON CITY, MO 65102
1-888-ASK-MODOT (1-888-275-6636)

IF A SEAL IS PRESENT ON THIS SHEET IT HAS BEEN ELECTRONICALLY SEALED AND DATED.

REV.

SIGN NO.	60
STATION	VARIOUS
ROADWAY	VARIOUS

SIGN 60

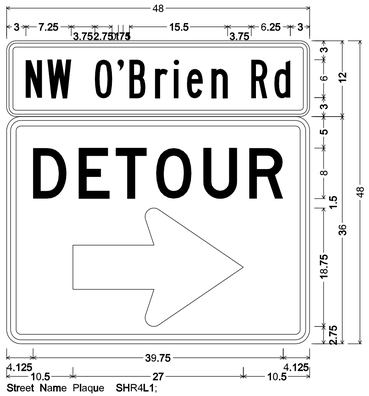

Street Name Plaque SHR4L1;
1.500" Radius, 0.625" Border, 0.375" Indent, Black on Orange;
[NW O ' Brien Rd] B;
MO4-9R-48 SHR4L1;
2.250" Radius, 0.875" Border, 0.625" Indent, Black on Orange;
[DETOUR] D;
Standard Arrow Custom 27.000" X 18.750" 0°;
Table of letter and object lefts.

N 3.000	W 6.500	O 14.000	' 17.750					
	B 19.500	r 23.500	i 26.500	e 28.625	n 32.500	R 38.750	d 42.375	
D 4.125	E 11.375	T 17.250	O 23.625	U 31.250	R 38.500			
⇨ 10.500								

SIGN NO.	61
STATION	VARIOUS
ROADWAY	VARIOUS

SIGN 61

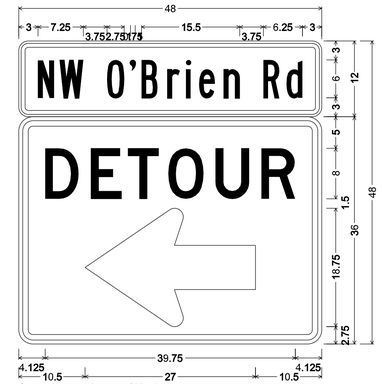

Street Name Plaque SHR4L1;
1.500" Radius, 0.625" Border, 0.375" Indent, Black on Orange;
[NW O ' Brien Rd] B;
MO4-9L-48 SHR4L1;
2.250" Radius, 0.875" Border, 0.625" Indent, Black on Orange;
[DETOUR] D;
Standard Arrow Custom 27.000" X 18.750" 180°;
Table of letter and object lefts.

N 3.000	W 6.500	O 14.000	' 17.750					
	B 19.500	r 23.500	i 26.500	e 28.625	n 32.500	R 38.750	d 42.375	
D 4.125	E 11.375	T 17.250	O 23.625	U 31.250	R 38.500			
⇦ 10.500								

SIGN NO.	62
STATION	VARIOUS
ROADWAY	VARIOUS

SIGN 62

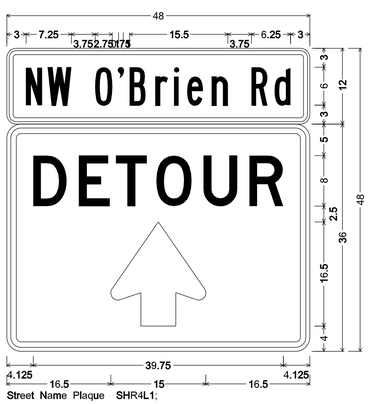

Street Name Plaque SHR4L1;
1.500" Radius, 0.625" Border, 0.375" Indent, Black on Orange;
[NW O ' Brien Rd] B;
MO4-9-48 SHR4L1;
2.250" Radius, 0.875" Border, 0.625" Indent, Black on Orange;
[DETOUR] D;
Table of letter and object lefts.

N 3.000	W 6.500	O 14.000	' 17.750					
	B 19.500	r 23.500	i 26.500	e 28.625	n 32.500	R 38.750	d 42.375	
D 4.125	E 11.375	T 17.250	O 23.625	U 31.250	R 38.500			
⇦ 16.500								

A24461
TRAFFIC CONTROL SHEET
SHEET 50 OF 52

"THIS MEDIA SHOULD NOT BE CONSIDERED A CERTIFIED DOCUMENT."

DATE PREPARED	12/17/2013
ROUTE	VAR.
STATE	MO
DISTRICT	KC
SHEET NO.	59
COUNTY	JACKSON
JOB NO.	J4P2191
CONTRACT ID.	
PROJECT NO.	
BRIDGE NO.	A24461

DATE	DESCRIPTION

MISSOURI HIGHWAYS AND TRANSPORTATION COMMISSION
105 WEST CAPITOL
JEFFERSON CITY, MO 65102
1-888-ASK-MODOT (1-888-275-6636)

IF A SEAL IS PRESENT ON THIS SHEET IT HAS BEEN ELECTRONICALLY SEALED AND DATED.

REV.

SIGN 63

SIGN NO.	63
STATION	VARIOUS
ROADWAY	VARIOUS

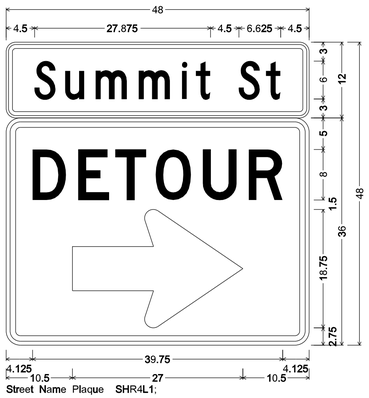

Street Name Plaque SHR4L1;
1.500" Radius, 0.625" Border, 0.375" Indent, Black on Orange;
[Summit St] C;
MO4-9R-48 SHR4L1;
2.250" Radius, 0.875" Border, 0.625" Indent, Black on Orange;
[DETOUR] D;
Standard Arrow Custom 27.000" X 18.750" 0°;
Table of letter and object lefts.

S 4.500	u 9.375	m 14.250	m 21.000	i 27.875	t 30.125	S 36.875	t 41.250
D 4.125	E 11.375	T 17.250	O 23.625	U 31.250	R 38.500		
⇨ 10.500							

SIGN 64

SIGN NO.	64
STATION	VARIOUS
ROADWAY	VARIOUS

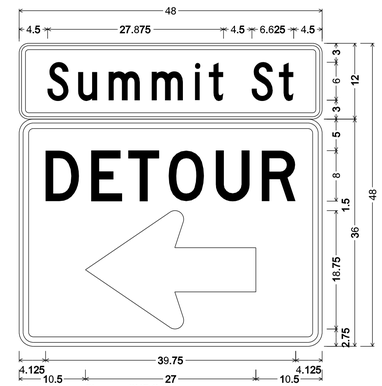

Street Name Plaque SHR4L1;
1.500" Radius, 0.625" Border, 0.375" Indent, Black on Orange;
[Summit St] C;
MO4-9L-48 SHR4L1;
2.250" Radius, 0.875" Border, 0.625" Indent, Black on Orange;
[DETOUR] D;
Standard Arrow Custom 27.000" X 18.750" 180°;
Table of letter and object lefts.

S 4.500	u 9.375	m 14.250	m 21.000	i 27.875	t 30.125	S 36.875	t 41.250
D 4.125	E 11.375	T 17.250	O 23.625	U 31.250	R 38.500		
⇦ 10.500							

SIGN 65

SIGN NO.	65
STATION	VARIOUS
ROADWAY	VARIOUS

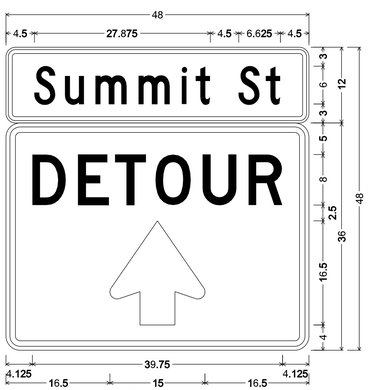

Street Name Plaque SHR4L1;
1.500" Radius, 0.625" Border, 0.375" Indent, Black on Orange;
[Summit St] C;
MO4-9-48 SHR4L1;
2.250" Radius, 0.875" Border, 0.625" Indent, Black on Orange;
[DETOUR] D;
Table of letter and object lefts.

S 4.500	u 9.375	m 14.250	m 21.000	i 27.875	t 30.125	S 36.875	t 41.250
D 4.125	E 11.375	T 17.250	O 23.625	U 31.250	R 38.500		
⇧ 16.500							

A31412
TRAFFIC CONTROL SHEET
SHEET 51 OF 52

D-31

"THIS MEDIA SHOULD NOT BE CONSIDERED A CERTIFIED DOCUMENT."

DATE PREPARED	12/17/2013
ROUTE VAR.	STATE MO
DISTRICT KC	SHEET NO. 60
COUNTY	JACKSON
JOB NO.	J4P2191
CONTRACT ID.	
PROJECT NO.	
BRIDGE NO.	A31412

DESCRIPTION

DATE

MISSOURI HIGHWAYS AND TRANSPORTATION COMMISSION

105 WEST CAPITOL
JEFFERSON CITY, MO 65102
1-888-ASK-MODOT (1-888-275-6636)

IF A SEAL IS PRESENT ON THIS SHEET IT HAS BEEN ELECTRONICALLY SEALED AND DATED.

REV.

SIGN NO.	60
STATION	VARIOUS
ROADWAY	VARIOUS

SIGN 60

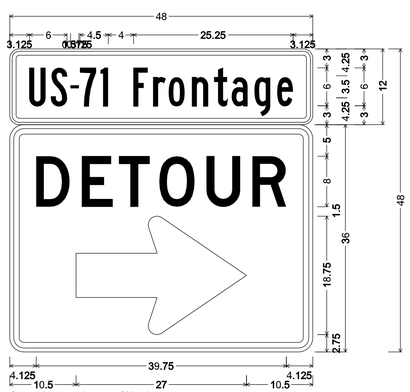

Street Name Plaque SHR4L1;
1.500" Radius, 0.625" Border, 0.375" Indent, Black on Orange;
[US-71 Frontage] B 80% spacing;
MO4-9R-48 SHR4L1;
2.250" Radius, 0.875" Border, 0.625" Indent, Black on Orange;
[DETOUR] D;
Standard Arrow Custom 27.000" X 18.750" 0°;
Table of letter and object lefts.

U	S	-	7	1						
3.125	6.500	9.625	11.125	14.375						
	F	r	o	n	t	a	g	e		
	19.625	22.750	25.125	28.875	32.375	35.125	38.750	42.375		
D	E	T	O	U	R					
4.125	11.375	17.250	23.625	31.250	38.500					
⇨										
10.500										

SIGN NO.	61
STATION	VARIOUS
ROADWAY	VARIOUS

SIGN 61

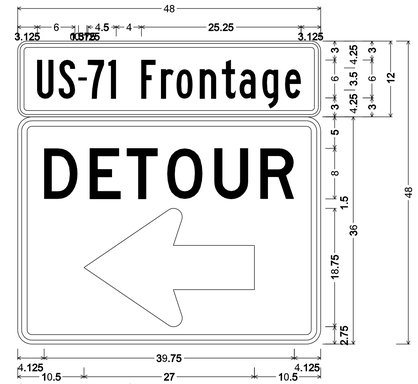

Street Name Plaque SHR4L1;
1.500" Radius, 0.625" Border, 0.375" Indent, Black on Orange;
[US-71 Frontage] B 80% spacing;
MO4-9L-48 SHR4L1;
2.250" Radius, 0.875" Border, 0.625" Indent, Black on Orange;
[DETOUR] D;
Standard Arrow Custom 27.000" X 18.750" 180°;
Table of letter and object lefts.

U	S	-	7	1						
3.125	6.500	9.625	11.125	14.375						
	F	r	o	n	t	a	g	e		
	19.625	22.750	25.125	28.875	32.375	35.125	38.750	42.375		
D	E	T	O	U	R					
4.125	11.375	17.250	23.625	31.250	38.500					
⇦										
10.500										

SIGN NO.	62
STATION	VARIOUS
ROADWAY	VARIOUS

SIGN 62

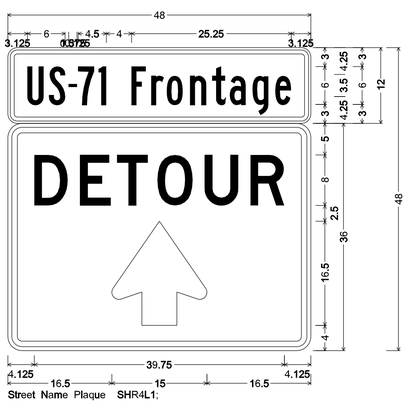

Street Name Plaque SHR4L1;
1.500" Radius, 0.625" Border, 0.375" Indent, Black on Orange;
[US-71 Frontage] B 80% spacing;
MO4-9-48 SHR4L1;
2.250" Radius, 0.875" Border, 0.625" Indent, Black on Orange;
[DETOUR] D;
Table of letter and object lefts.

U	S	-	7	1						
3.125	6.500	9.625	11.125	14.375						
	F	r	o	n	t	a	g	e		
	19.625	22.750	25.125	28.875	32.375	35.125	38.750	42.375		
D	E	T	O	U	R					
4.125	11.375	17.250	23.625	31.250	38.500					
⇧										
16.500										

L09292
TRAFFIC CONTROL SHEET
SHEET 52 OF 52

"THIS MEDIA SHOULD NOT BE CONSIDERED A CERTIFIED DOCUMENT."

DATE PREPARED	12/17/2013
ROUTE	VAR.
STATE	MO
DISTRICT	KC
SHEET NO.	61
COUNTY	JACKSON
JOB NO.	J4P2191
CONTRACT ID.	
PROJECT NO.	
BRIDGE NO.	A24461

DESCRIPTION

DATE

MISSOURI HIGHWAYS AND TRANSPORTATION COMMISSION

105 WEST CAPITOL
JEFFERSON CITY, MO 65102
1-888-ASK-MODOT (1-888-275-6636)

IF A SEAL IS PRESENT ON THIS SHEET IT HAS BEEN ELECTRONICALLY SEALED AND DATED.

REV.

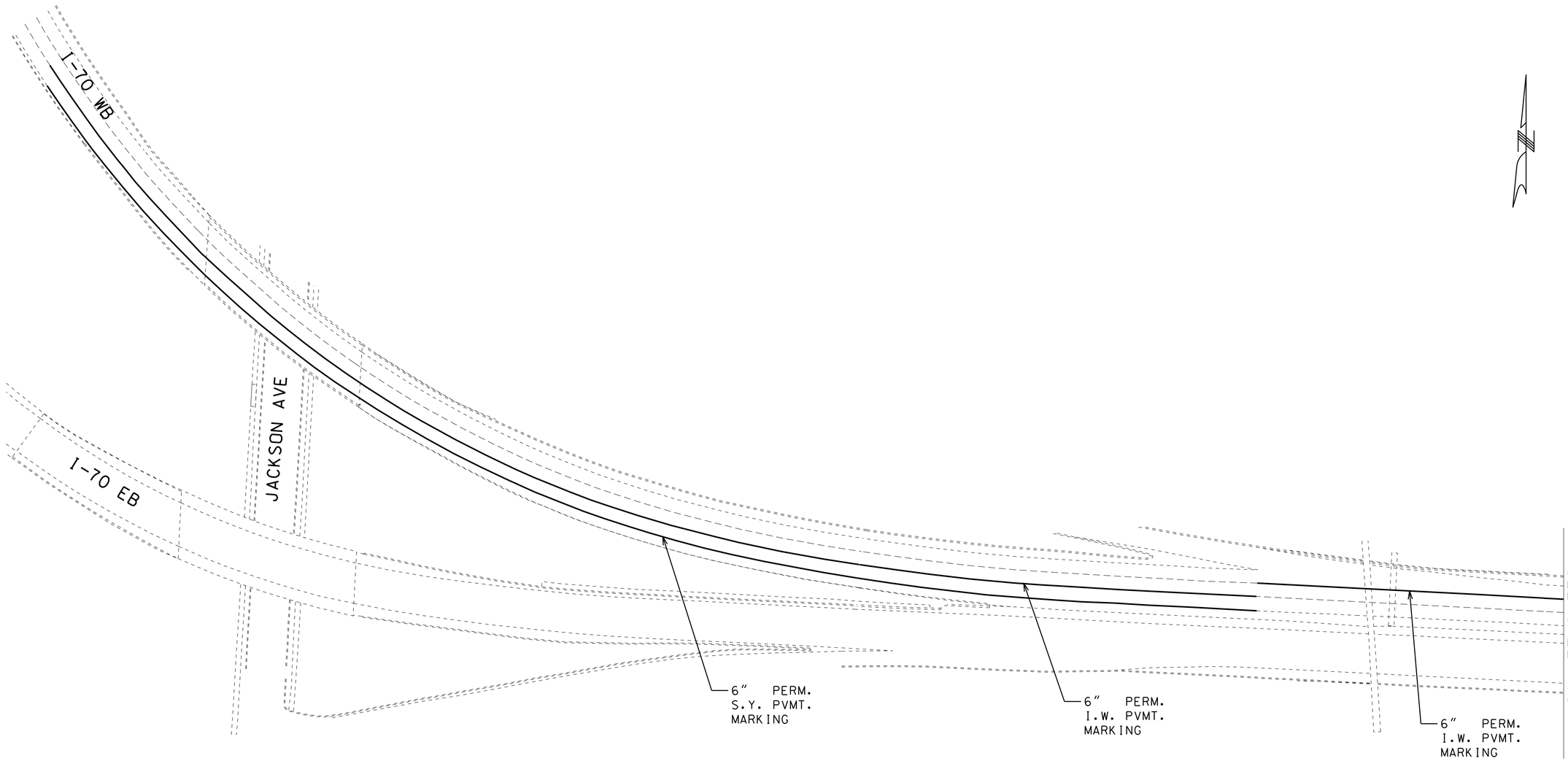

NOTE: DUE TO WORK DAY RESTRICTIONS, PHASE 2 IS MEANT TO RE-OPEN I-70 IN-BETWEEN WORK WEEKENDS

NOT TO SCALE

A03154
I-70 WB OVER JACKSON AVE
PAVEMENT MARKING SHEET
PERMANENT STRIPING
PHASE 2
SHEET 1 OF 20

"THIS MEDIA SHOULD NOT BE CONSIDERED A CERTIFIED DOCUMENT."

DATE PREPARED	12/15/2013
ROUTE	VAR.
STATE	MO
DISTRICT	KC
SHEET NO.	62
COUNTY	JACKSON
JOB NO.	J4P2191
CONTRACT ID.	
PROJECT NO.	
BRIDGE NO.	A03154

DATE	DESCRIPTION

MISSOURI HIGHWAYS AND TRANSPORTATION COMMISSION

105 WEST CAPITOL
JEFFERSON CITY, MO 65102
1-888-ASK-MODOT (1-888-275-6636)

IF A SEAL IS PRESENT ON THIS SHEET IT HAS BEEN ELECTRONICALLY SEALED AND DATED.

REV.

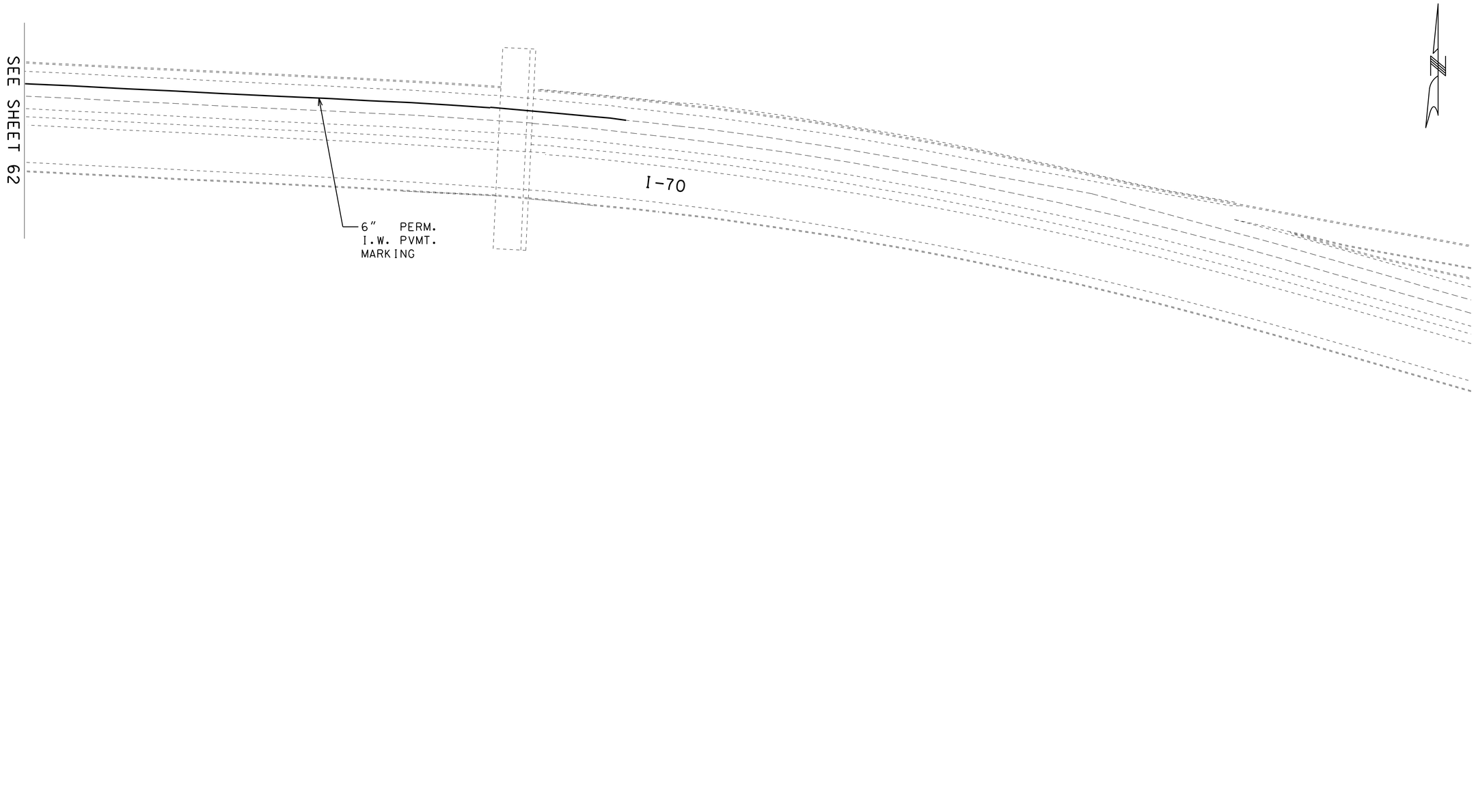

NOT TO SCALE

A03154
I-70 WB OVER JACKSON AVE
PAVEMENT MARKING SHEET
PHASE 2
SHEET 2 OF 20

"THIS MEDIA SHOULD NOT BE CONSIDERED A CERTIFIED DOCUMENT."

DATE PREPARED	12/15/2013
ROUTE	VAR.
STATE	MO
DISTRICT	KC
SHEET NO.	63
COUNTY	JACKSON
JOB NO.	J4P2191
CONTRACT ID.	
PROJECT NO.	
BRIDGE NO.	A03154

DATE	DESCRIPTION

MISSOURI HIGHWAYS AND TRANSPORTATION COMMISSION

105 WEST CAPITOL
JEFFERSON CITY, MO 65102
1-888-ASK-MODOT (1-888-275-6636)

IF A SEAL IS PRESENT ON THIS SHEET IT HAS BEEN ELECTRONICALLY SEALED AND DATED.

REV.

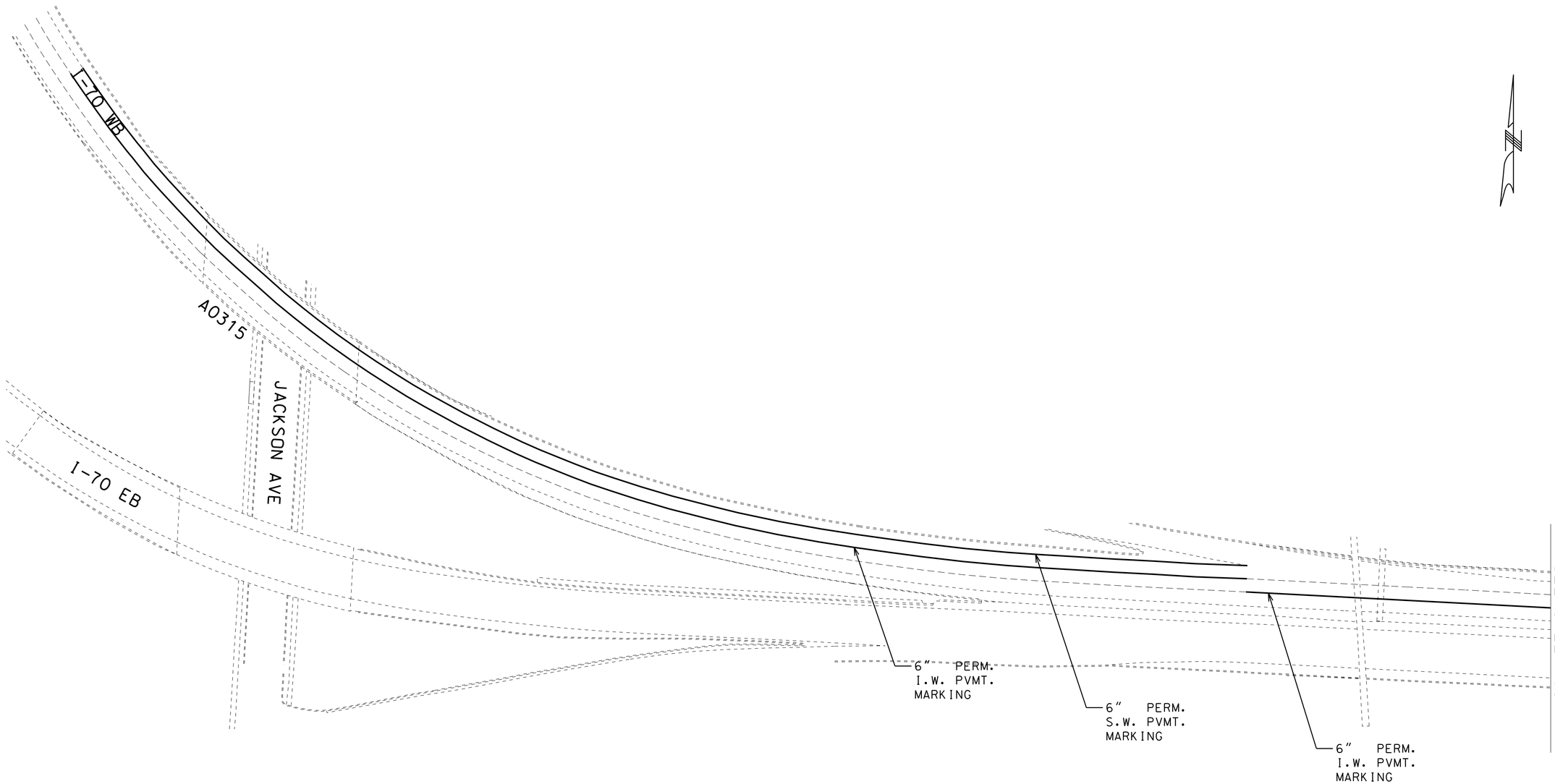

NOT TO SCALE

A03154
I-70 WB OVER JACKSON AVE
PAVEMENT MARKING SHEET
PERMANENT STRIPING
PHASE 4
SHEET 3 OF 20

"THIS MEDIA SHOULD NOT BE CONSIDERED A CERTIFIED DOCUMENT."

DATE PREPARED	12/15/2013
ROUTE	VAR.
STATE	MO
DISTRICT	KC
SHEET NO.	64
COUNTY	JACKSON
JOB NO.	J4P2191
CONTRACT ID.	
PROJECT NO.	
BRIDGE NO.	A03154

DATE	DESCRIPTION

MISSOURI HIGHWAYS AND TRANSPORTATION COMMISSION

105 WEST CAPITOL
JEFFERSON CITY, MO 65102
1-888-ASK-MODOT (1-888-275-6636)

IF A SEAL IS PRESENT ON THIS SHEET IT HAS BEEN ELECTRONICALLY SEALED AND DATED.

REV.

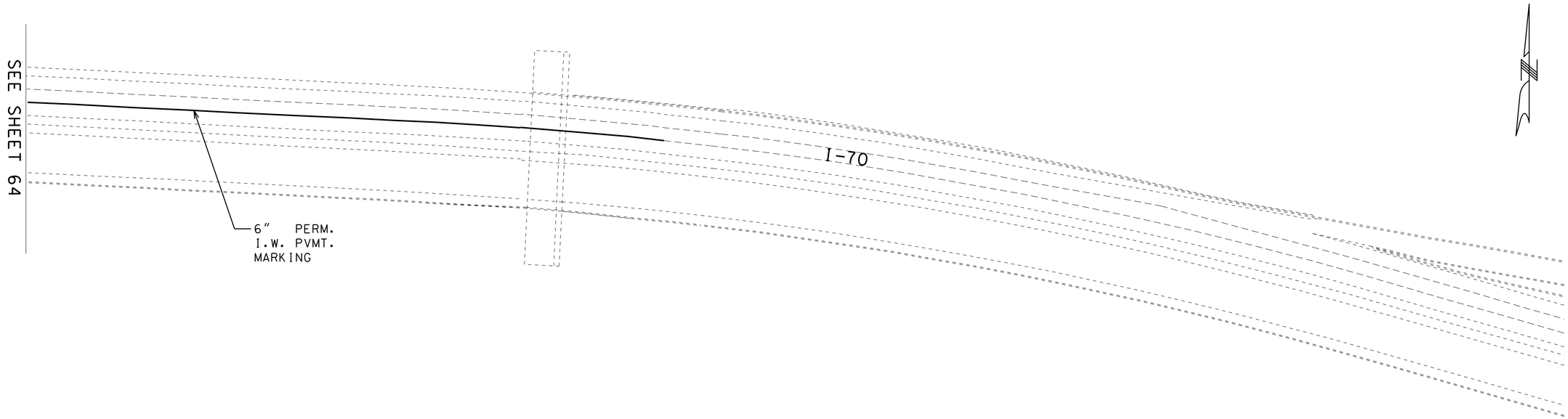

NOT TO SCALE

A03154
I-70 WB OVER JACKSON AVE
PAVEMENT MARKING SHEET
PERMANENT STRIPING
PHASE 4
SHEET 4 OF 20

"THIS MEDIA SHOULD NOT BE CONSIDERED A CERTIFIED DOCUMENT."

DATE PREPARED	12/15/2013
ROUTE	VAR.
STATE	MO
DISTRICT	KC
SHEET NO.	65
COUNTY	JACKSON
JOB NO.	J4P2191
CONTRACT ID.	
PROJECT NO.	
BRIDGE NO.	A03154

DATE	DESCRIPTION

MISSOURI HIGHWAYS AND TRANSPORTATION COMMISSION

105 WEST CAPITOL
JEFFERSON CITY, MO 65102
1-888-ASK-MODOT (1-888-275-6636)

IF A SEAL IS PRESENT ON THIS SHEET IT HAS BEEN ELECTRONICALLY SEALED AND DATED.

REV.

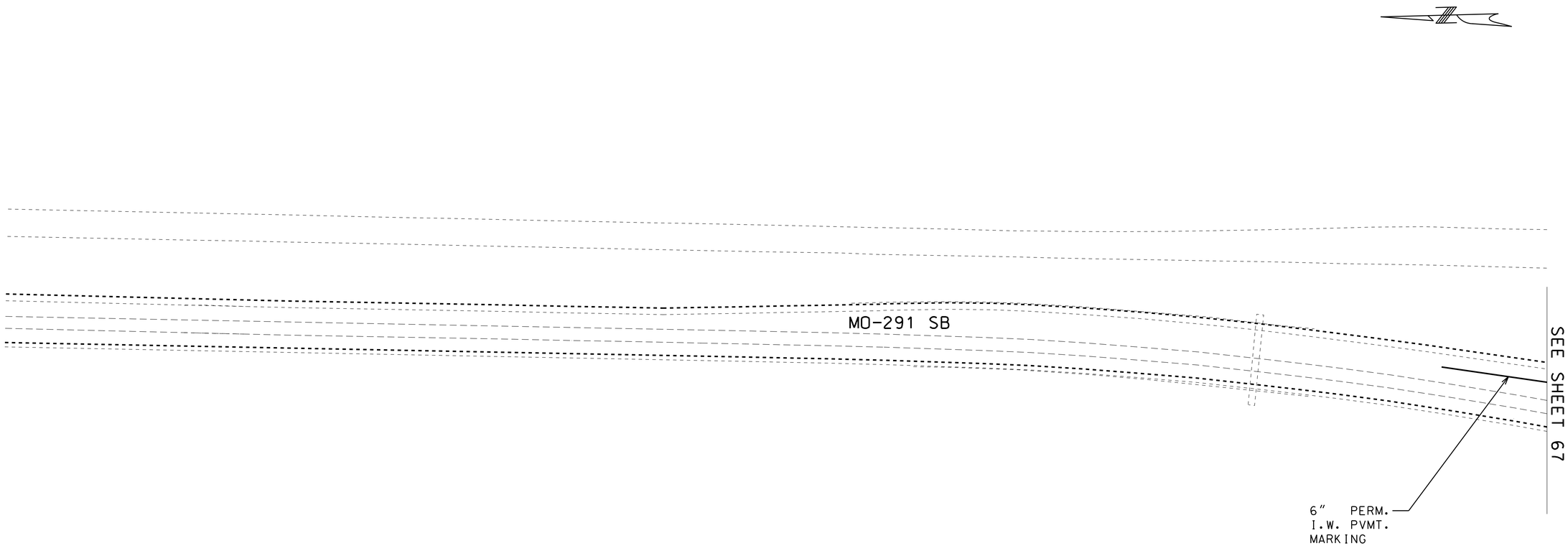

NOT TO SCALE

A21201
291 SB OVER I-470 NB
PAVEMENT MARKING SHEET
PERMANENT STRIPING
SHEET 5 OF 20

"THIS MEDIA SHOULD NOT BE CONSIDERED A CERTIFIED DOCUMENT."

DATE PREPARED	
12/15/2013	
ROUTE	STATE
VAR.	MO
DISTRICT	SHEET NO.
KC	66
COUNTY	
JOB NO.	
J4P2191	
CONTRACT ID.	
PROJECT NO.	
BRIDGE NO.	
A21201	

DATE	DESCRIPTION

MISSOURI HIGHWAYS AND TRANSPORTATION COMMISSION

105 WEST CAPITOL
JEFFERSON CITY, MO 65102
1-888-ASK-MODOT (1-888-275-6636)

IF A SEAL IS PRESENT ON THIS SHEET IT HAS BEEN ELECTRONICALLY SEALED AND DATED.

REV.

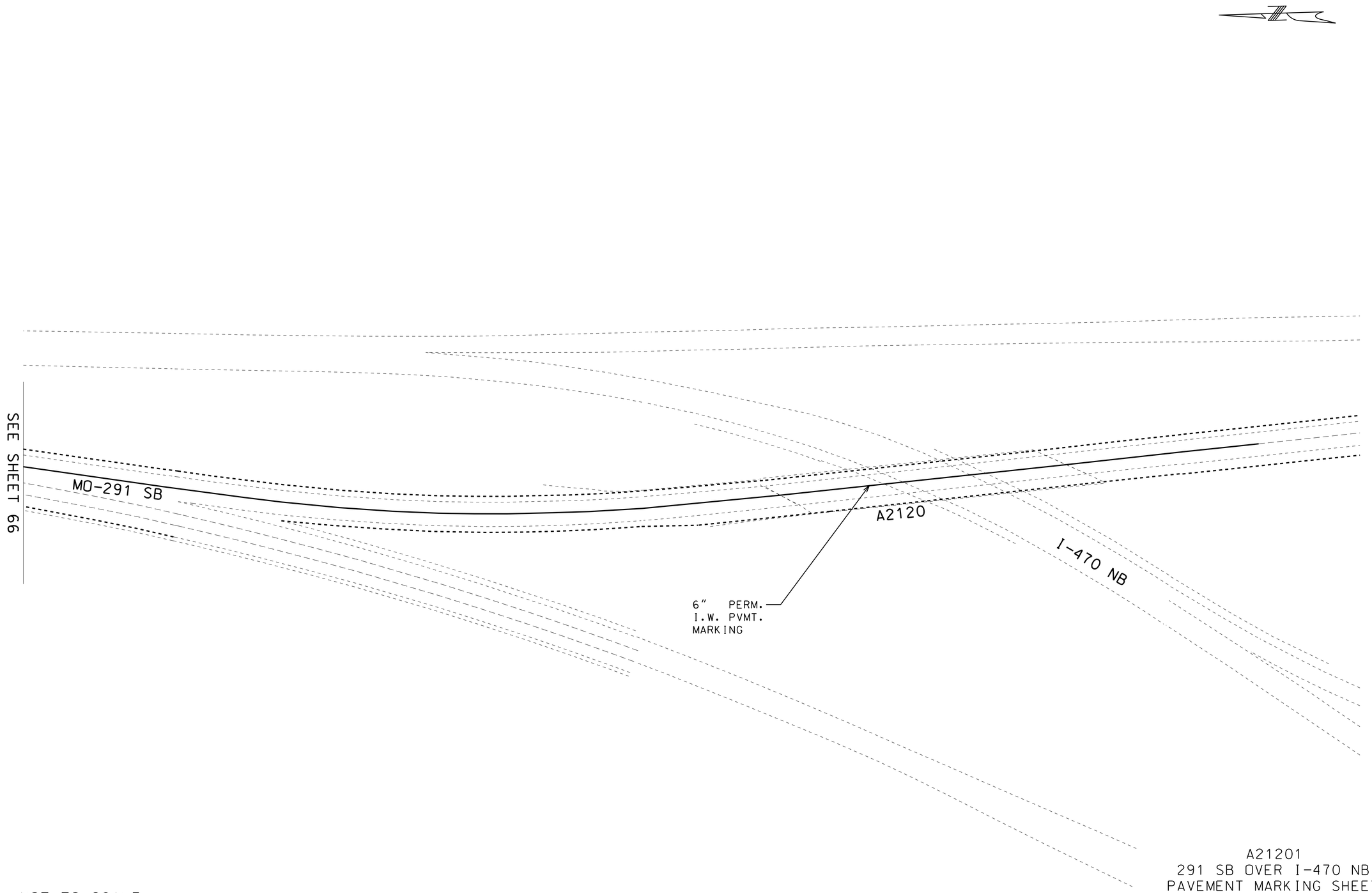

NOT TO SCALE

A21201
291 SB OVER I-470 NB
PAVEMENT MARKING SHEET
PERMANENT STRIPING
SHEET 6 OF 20

"THIS MEDIA SHOULD NOT BE CONSIDERED A CERTIFIED DOCUMENT."

DATE PREPARED	12/15/2013
ROUTE	VAR.
STATE	MO
DISTRICT	KC
SHEET NO.	67
COUNTY	JACKSON
JOB NO.	J4P2191
CONTRACT ID.	
PROJECT NO.	
BRIDGE NO.	A21201

DATE	DESCRIPTION

MISSOURI HIGHWAYS AND TRANSPORTATION COMMISSION

105 WEST CAPITOL
JEFFERSON CITY, MO 65102
1-888-ASK-MODOT (1-888-275-6636)

IF A SEAL IS PRESENT ON THIS SHEET IT HAS BEEN ELECTRONICALLY SEALED AND DATED.

REV.

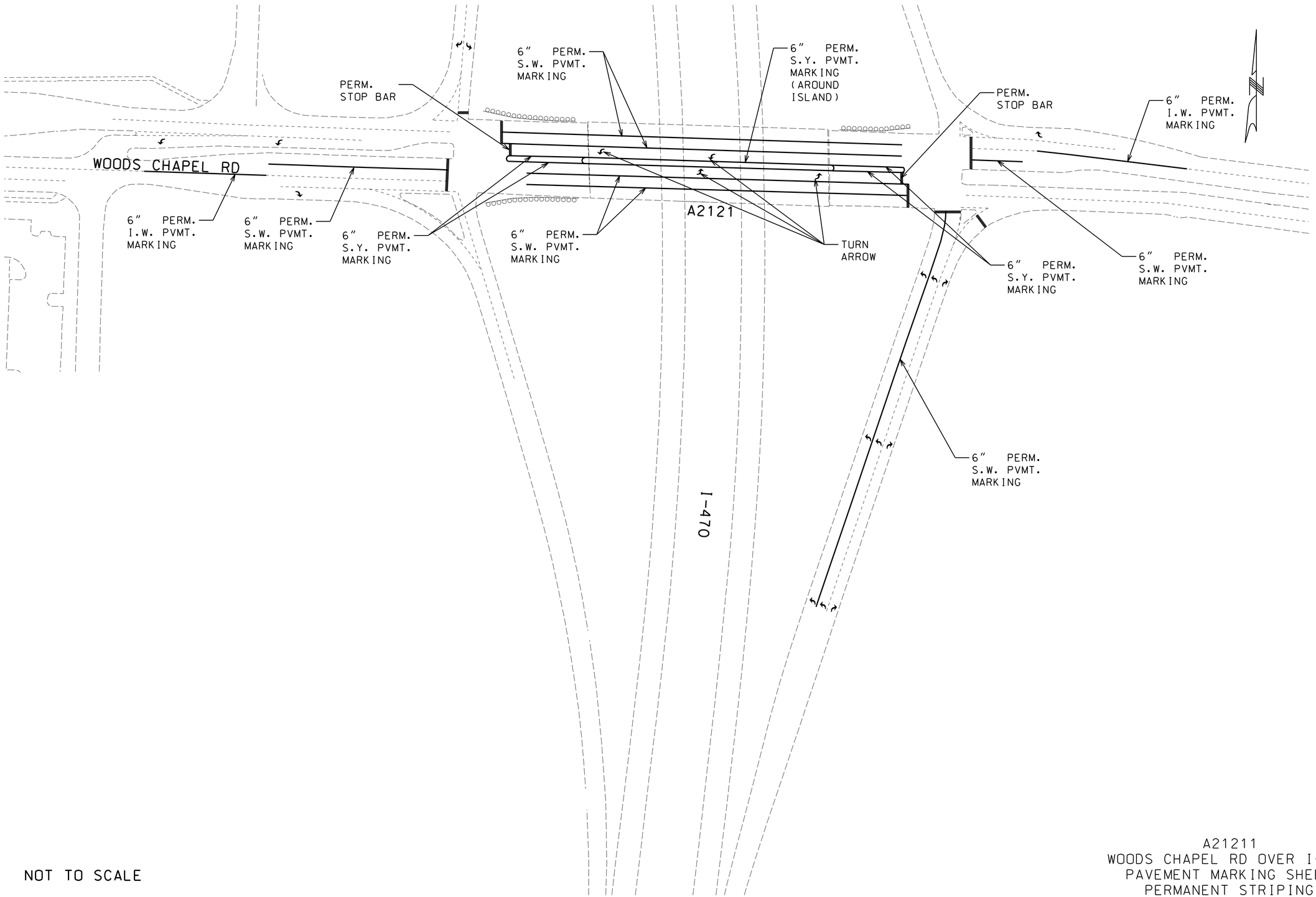

NOT TO SCALE

A21211
WOODS CHAPEL RD OVER I-470
PAVEMENT MARKING SHEET
PERMANENT STRIPING
SHEET 7 OF 20

"THIS MEDIA SHOULD NOT BE CONSIDERED A CERTIFIED DOCUMENT."

DATE PREPARED	
12/15/2013	
ROUTE	STATE
VAR.	MO
DISTRICT	SHEET NO.
KC	68
COUNTY	
JACKSON	
JOB NO.	
J4P2191	
CONTRACT ID.	
PROJECT NO.	
BRIDGE NO.	
A21211	

DATE	DESCRIPTION

MISSOURI HIGHWAYS AND TRANSPORTATION COMMISSION

105 WEST CAPITOL
JEFFERSON CITY, MO 65102
1-888-ASK-MODOT (1-888-275-6636)

IF A SEAL IS PRESENT ON THIS SHEET IT HAS BEEN ELECTRONICALLY SEALED AND DATED.

REV.

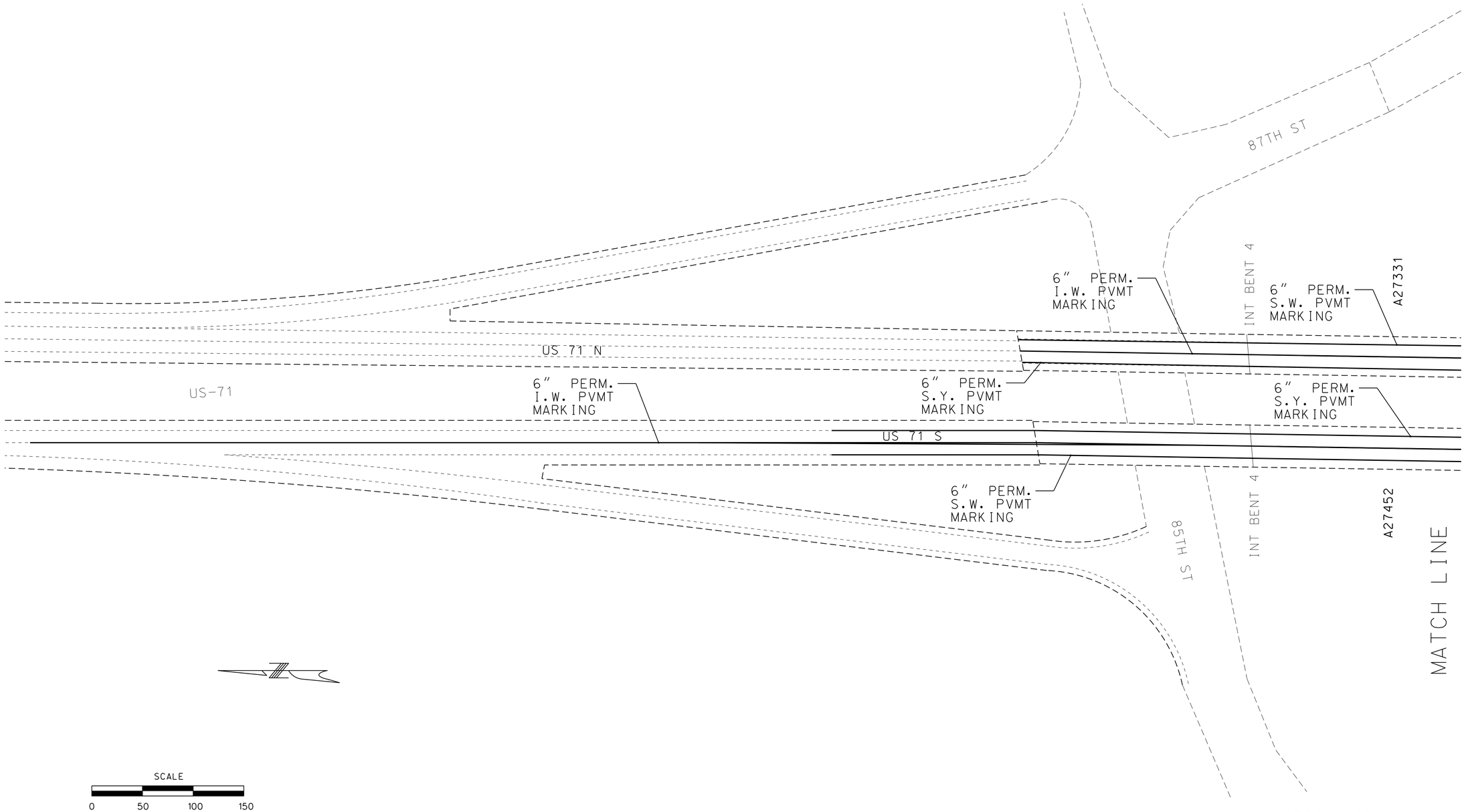

A27331/A27452
US-71 OVER BLUE RIVER
PAVEMENT MARKING SHEET
PERMANENT STRIPING
SHEET 8 OF 20

"THIS MEDIA SHOULD NOT BE CONSIDERED A CERTIFIED DOCUMENT."

DATE PREPARED	12/15/2013
ROUTE	VAR.
STATE	MO
DISTRICT	KC
SHEET NO.	69
COUNTY	JACKSON
JOB NO.	J4P2191
CONTRACT ID.	
PROJECT NO.	
BRIDGE NO.	A27331/A27452

DATE	DESCRIPTION

MISSOURI HIGHWAYS AND TRANSPORTATION COMMISSION

105 WEST CAPITOL
JEFFERSON CITY, MO 65102
1-888-ASK-MODOT (1-888-275-6636)

IF A SEAL IS PRESENT ON THIS SHEET IT HAS BEEN ELECTRONICALLY SEALED AND DATED.

REV.

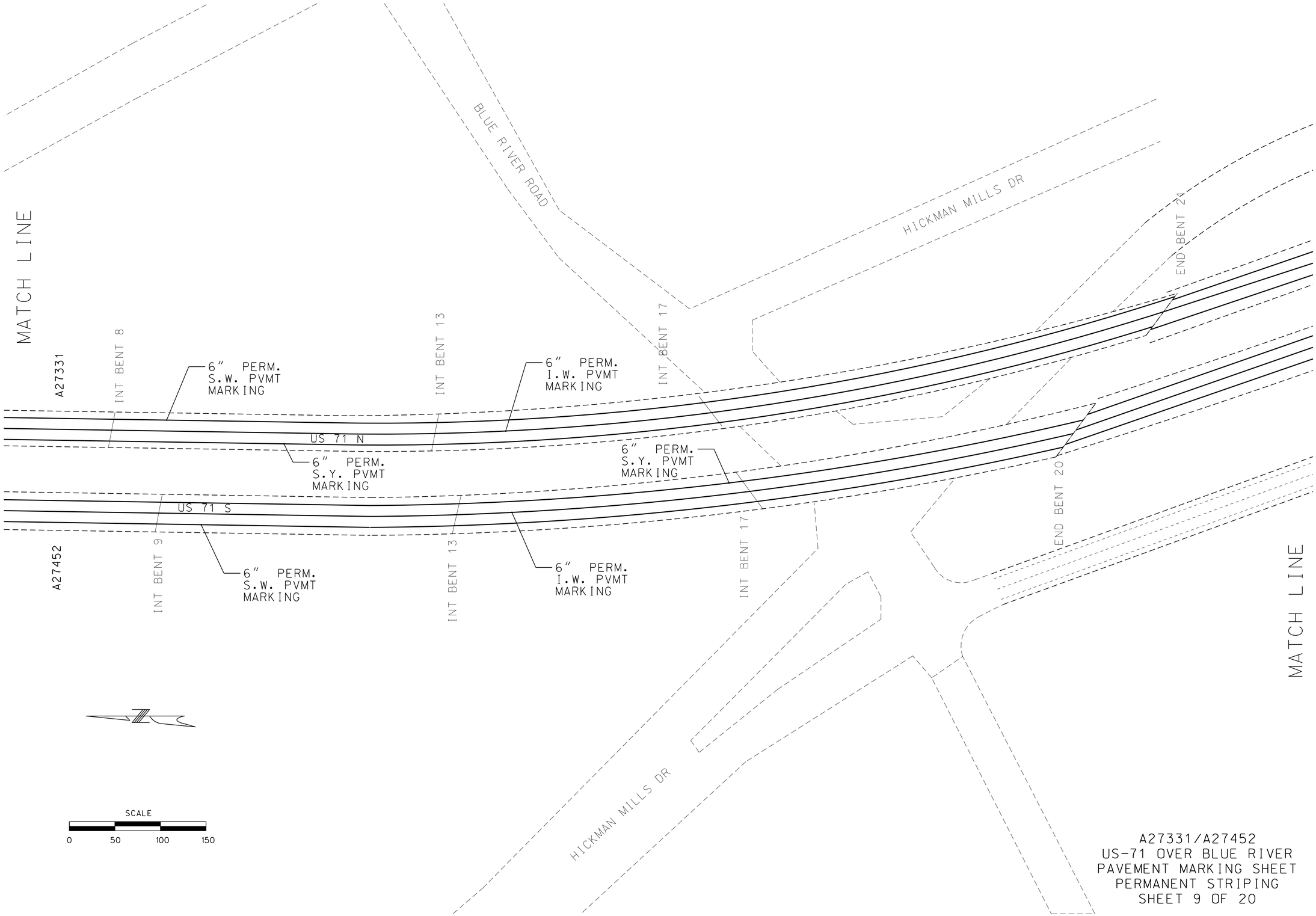

A27331/A27452
US-71 OVER BLUE RIVER
PAVEMENT MARKING SHEET
PERMANENT STRIPING
SHEET 9 OF 20

"THIS MEDIA SHOULD NOT BE CONSIDERED A CERTIFIED DOCUMENT."

DATE PREPARED	12/15/2013
ROUTE	VAR.
STATE	MO
DISTRICT	KC
SHEET NO.	70
COUNTY	JACKSON
JOB NO.	J4P2191
CONTRACT ID.	
PROJECT NO.	
BRIDGE NO.	A27331/A27452

DATE	DESCRIPTION

MISSOURI HIGHWAYS AND TRANSPORTATION COMMISSION
105 WEST CAPITOL
JEFFERSON CITY, MO 65102
1-888-ASK-MODOT (1-888-275-6636)

IF A SEAL IS PRESENT ON THIS SHEET IT HAS BEEN ELECTRONICALLY SEALED AND DATED.

REV.

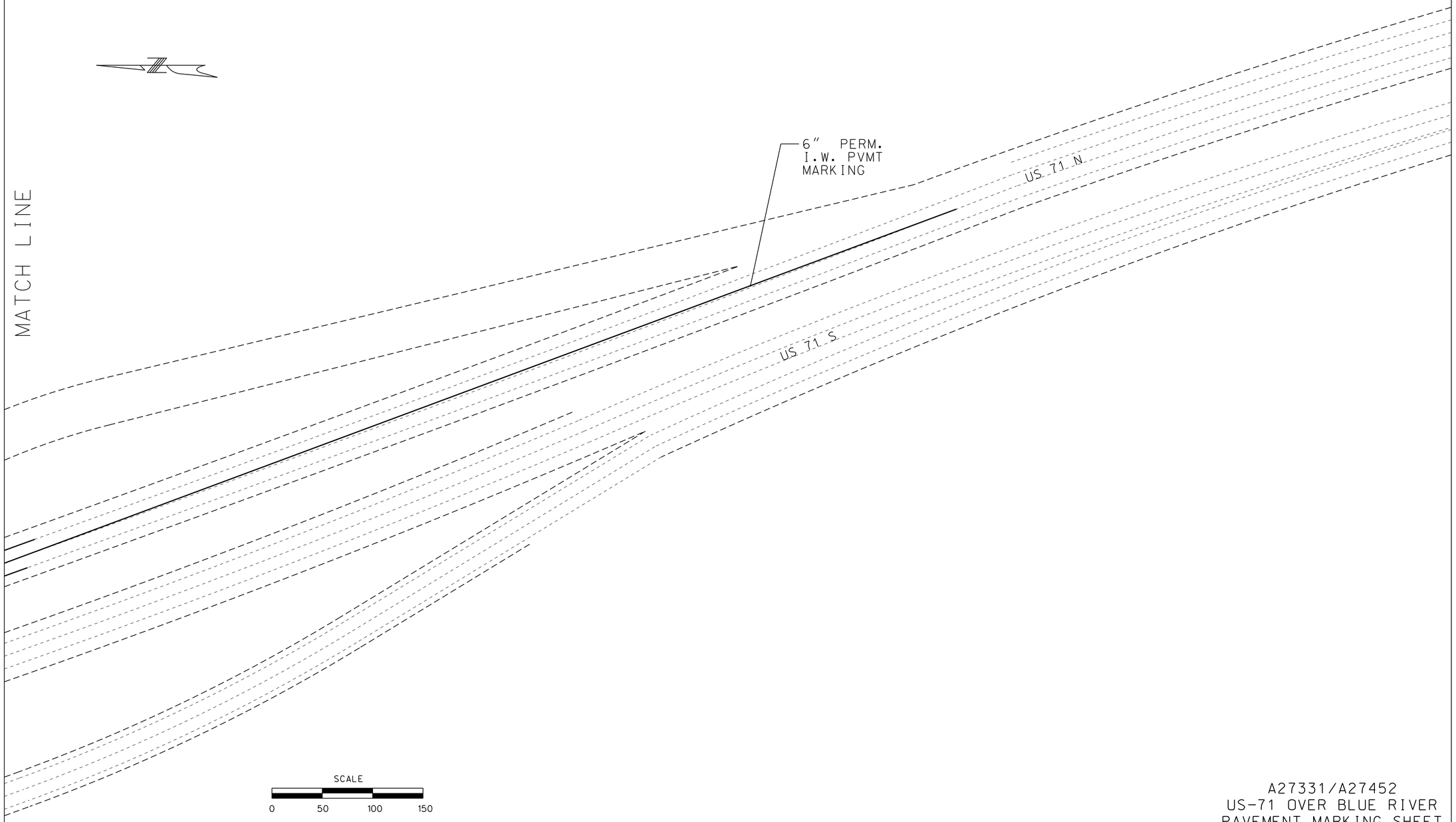

A27331/A27452
US-71 OVER BLUE RIVER
PAVEMENT MARKING SHEET
PERMANENT STRIPING
SHEET 10 OF 20

"THIS MEDIA SHOULD NOT BE CONSIDERED A CERTIFIED DOCUMENT."

DATE PREPARED	12/15/2013
ROUTE	VAR.
STATE	MO
DISTRICT	KC
SHEET NO.	71
COUNTY	JACKSON
JOB NO.	J4P2191
CONTRACT ID.	
PROJECT NO.	
BRIDGE NO.	A27331/A27452

DESCRIPTION	DATE

MISSOURI HIGHWAYS AND TRANSPORTATION COMMISSION

105 WEST CAPITOL
JEFFERSON CITY, MO 65102
1-888-ASK-MODOT (1-888-275-6636)

IF A SEAL IS PRESENT ON THIS SHEET IT HAS BEEN ELECTRONICALLY SEALED AND DATED.

REV.

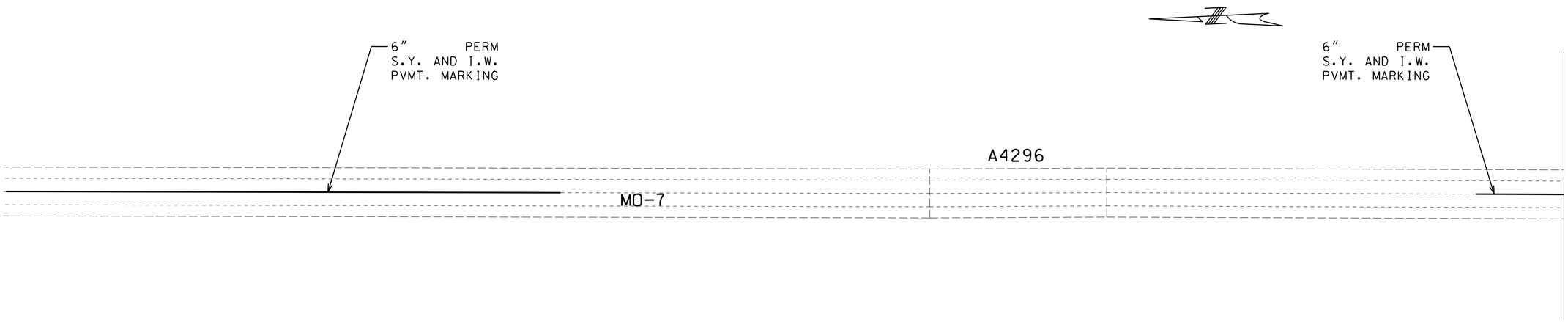

NOT TO SCALE

A42961
MO-7 OVER WEST FIRE PRAIRIE CREEK
PAVEMENT MARKING SHEET
PERMANENT STRIPING
SHEET 11 OF 20

"THIS MEDIA SHOULD NOT BE CONSIDERED A CERTIFIED DOCUMENT."

DATE PREPARED	12/15/2013
ROUTE	VAR.
STATE	MO
DISTRICT	KC
SHEET NO.	72
COUNTY	JACKSON
JOB NO.	J4P2191
CONTRACT ID.	
PROJECT NO.	
BRIDGE NO.	A42961

DATE	DESCRIPTION

MISSOURI HIGHWAYS AND TRANSPORTATION COMMISSION

105 WEST CAPITOL
JEFFERSON CITY, MO 65102
1-888-ASK-MODOT (1-888-275-6636)

IF A SEAL IS PRESENT ON THIS SHEET IT HAS BEEN ELECTRONICALLY SEALED AND DATED.

REV.

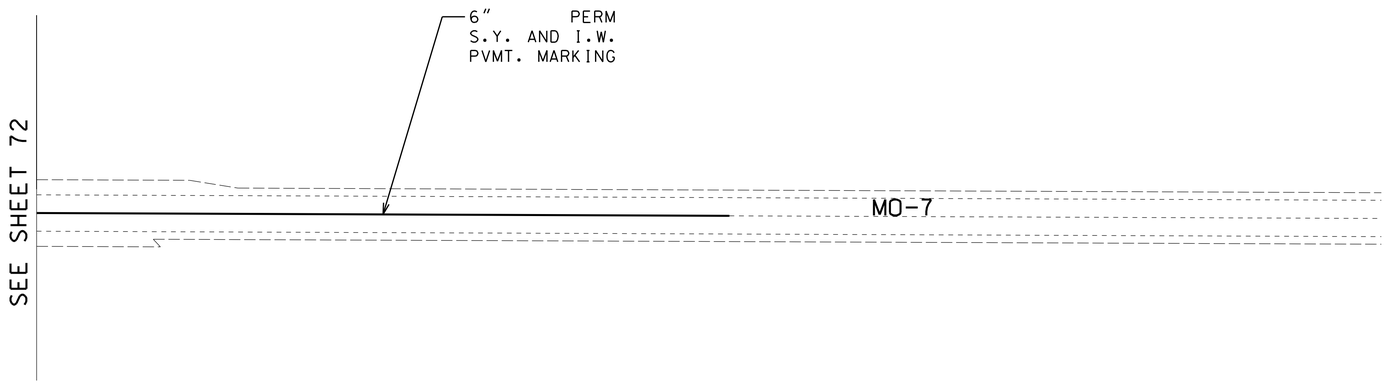

NOT TO SCALE

A42961
MO-7 OVER WEST FIRE PRAIRIE CREEK
PAVEMENT MARKING SHEET
PERMANENT STRIPING
SHEET 12 OF 20

"THIS MEDIA SHOULD NOT BE CONSIDERED A CERTIFIED DOCUMENT."

DATE PREPARED	12/15/2013
ROUTE	VAR.
STATE	MO
DISTRICT	KC
SHEET NO.	73
COUNTY	JACKSON
JOB NO.	J4P2191
CONTRACT ID.	
PROJECT NO.	
BRIDGE NO.	A42961

DATE	DESCRIPTION

MISSOURI HIGHWAYS AND TRANSPORTATION COMMISSION

105 WEST CAPITOL
JEFFERSON CITY, MO 65102
1-888-ASK-MODOT (1-888-275-6636)

IF A SEAL IS PRESENT ON THIS SHEET IT HAS BEEN ELECTRONICALLY SEALED AND DATED.

REV.

NOTE: TAPER CHANNELIZERS SHALL HAVE LIGHTS

NOTE: CONTRACTOR IS RESPONSIBLE FOR ROTATING AND COVERING NECESSARY SIGNAL HEADS FOR TRAFFIC PHASING

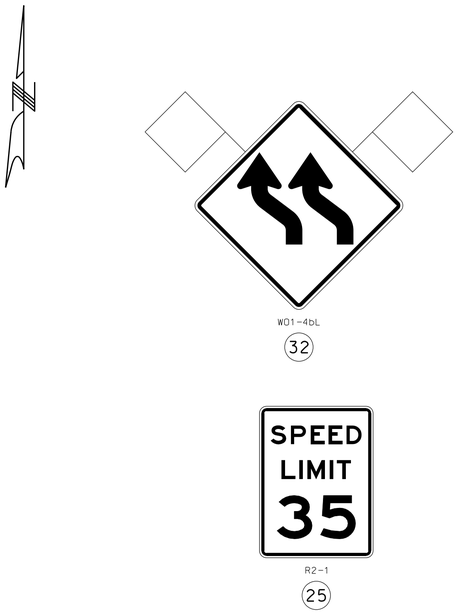

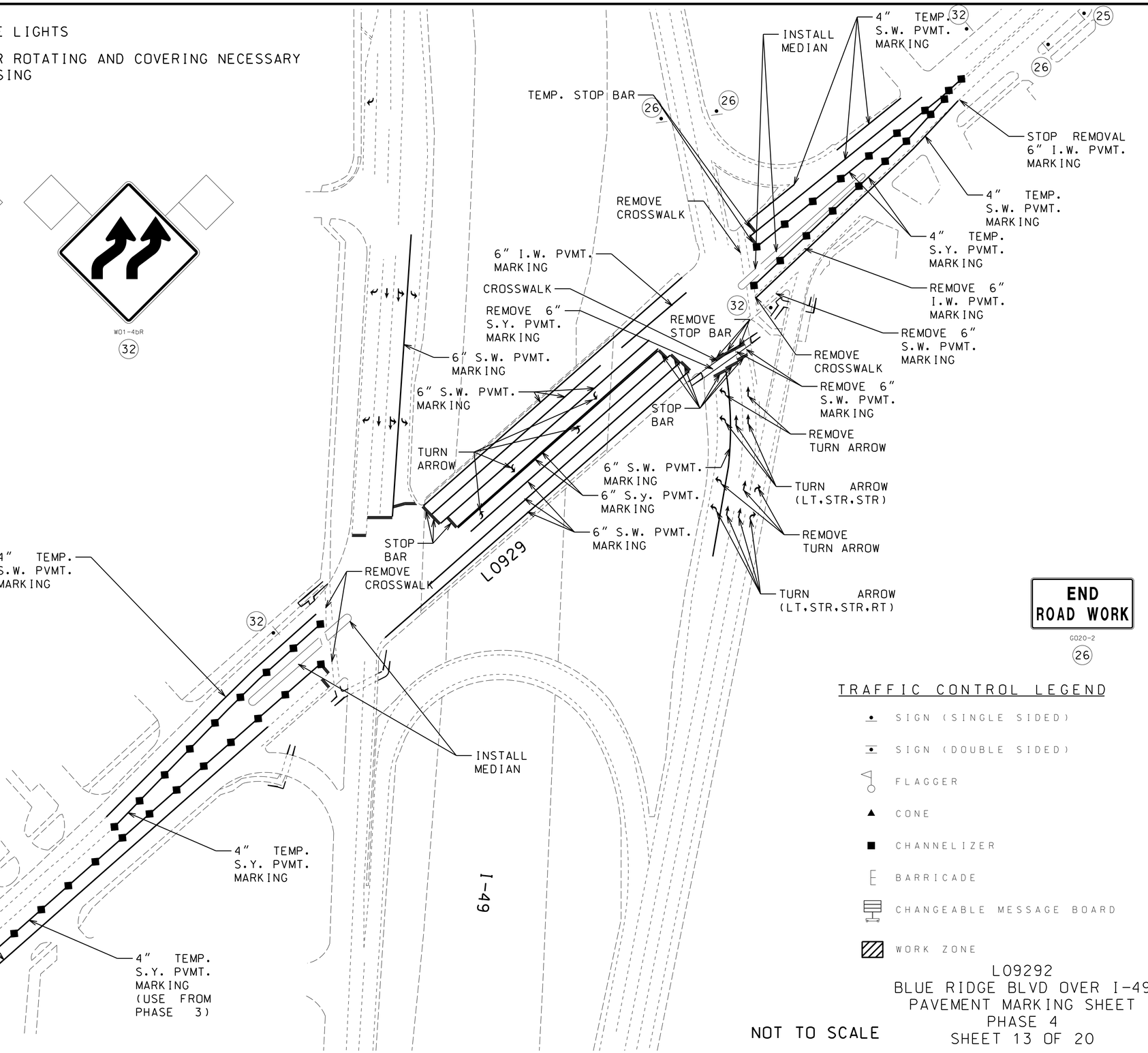

TRAFFIC CONTROL LEGEND

- SIGN (SINGLE SIDED)
- SIGN (DOUBLE SIDED)
- FLAGGER
- CONE
- CHANNELIZER
- BARRICADE
- CHANGEABLE MESSAGE BOARD
- WORK ZONE

NOT TO SCALE

L09292
BLUE RIDGE BLVD OVER I-49
PAVEMENT MARKING SHEET
PHASE 4
SHEET 13 OF 20

"THIS MEDIA SHOULD NOT BE CONSIDERED A CERTIFIED DOCUMENT."

DATE PREPARED	
12/15/2013	
ROUTE	STATE
VAR.	MO
DISTRICT	SHEET NO.
KC	74
COUNTY	
JACKSON	
JOB NO.	
J4P2191	
CONTRACT ID.	
PROJECT NO.	
BRIDGE NO.	
L09292	

DATE	DESCRIPTION

MISSOURI HIGHWAYS AND TRANSPORTATION COMMISSION
105 WEST CAPITOL
JEFFERSON CITY, MO 65102
1-888-ASK-MODOT (1-888-275-6636)

IF A SEAL IS PRESENT ON THIS SHEET IT HAS BEEN ELECTRONICALLY SEALED AND DATED.

REV.

NOTE: FRONTAGE STREET STRIPING DETAILS ON PAVEMENT MARKING SHEET 15 OF 20

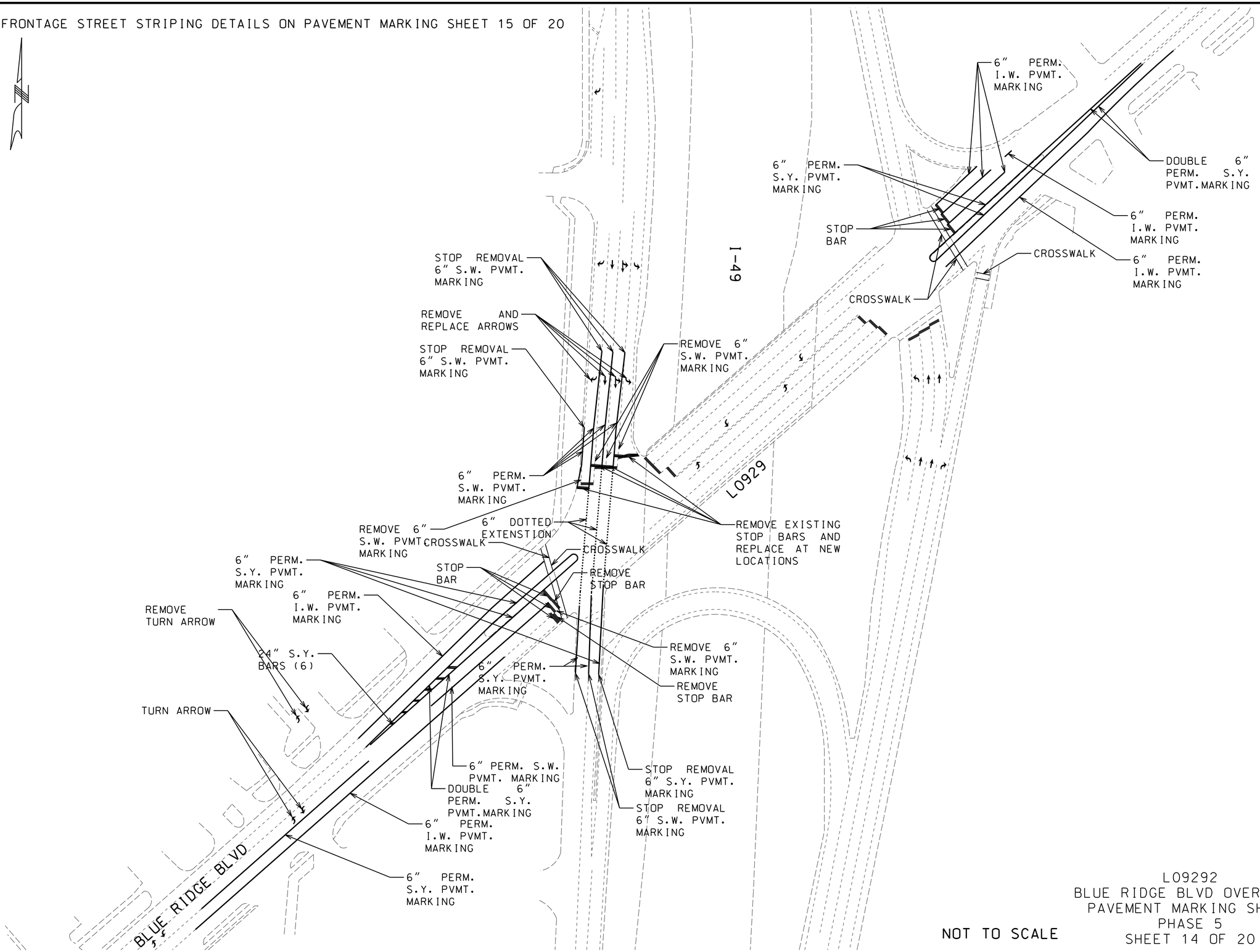

NOT TO SCALE

L09292
BLUE RIDGE BLVD OVER I-49
PAVEMENT MARKING SHEET
PHASE 5
SHEET 14 OF 20

"THIS MEDIA SHOULD NOT BE CONSIDERED A CERTIFIED DOCUMENT."

DATE PREPARED	
12/15/2013	
ROUTE	STATE
VAR.	MO
DISTRICT	SHEET NO.
KC	75
COUNTY	
JACKSON	
JOB NO.	
J4P2191	
CONTRACT ID.	
PROJECT NO.	
BRIDGE NO.	
L09292	

DATE	DESCRIPTION

MISSOURI HIGHWAYS AND TRANSPORTATION COMMISSION

105 WEST CAPITOL
JEFFERSON CITY, MO 65102
1-888-ASK-MODOT (1-888-275-6636)

IF A SEAL IS PRESENT ON THIS SHEET IT HAS BEEN ELECTRONICALLY SEALED AND DATED.

REV.

PERMANENT PAVEMENT MARKING FOR S. FRONTAGE RD								
SHEET NO	ROUTE	LOCATION	STATION (OFFSET) (BLUE RIDGE CL)	STATION (OFFSET) (BLUE RIDGE CL)	6" S.W. (LF)	6" D.E. (LF)	6" S.Y. (LF)	REMARKS
	BLUE RIDGE BLVD	S. FRONTAGE RD.	5+06.67 (126.34 LT)	4+81.30 (103.09 LT)	35			RIGHT TURN LANE
	BLUE RIDGE BLVD	S. FRONTAGE RD.	4+81.30 (103.09 LT)	4+52.41 (74.25 LT)	53			RIGHT TURN LANE
	BLUE RIDGE BLVD	S. FRONTAGE RD.	4+52.41 (74.25 LT)	4+32.36 (58.86 LT)	25			RIGHT TURN LANE
	BLUE RIDGE BLVD	S. FRONTAGE RD.	5+48.89 (151.45 LT)	4+88.06 (95.72 LT)	83			FIRST THRU LANE MARKING
	BLUE RIDGE BLVD	S. FRONTAGE RD.	4+88.06 (95.72 LT)	4+72.55 (80.23 LT)	22			FIRST THRU LANE MARKING
	BLUE RIDGE BLVD	S. FRONTAGE RD.	4+72.55 (80.23 LT)	4+41.41 (49.80 LT)	44			FIRST THRU LANE MARKING
	BLUE RIDGE BLVD	S. FRONTAGE RD.	4+41.41 (49.80 LT)	3+51.36 (38.65 RT)		127		FIRST THRU LANE MARKING
	BLUE RIDGE BLVD	S. FRONTAGE RD.	5+58.44 (143.92 LT)	4+96.16 (86.87 LT)	85			SECOND THRU LANE MARKING
	BLUE RIDGE BLVD	S. FRONTAGE RD.	4+96.16 (86.87 LT)	4+81.03 (71.74 LT)	22			SECOND THRU LANE MARKING
	BLUE RIDGE BLVD	S. FRONTAGE RD.	4+81.03 (71.74 LT)	4+67.47 (58.49 LT)	20			SECOND THRU LANE MARKING
	BLUE RIDGE BLVD	S. FRONTAGE RD.	4+67.47 (58.49 LT)	3+68.26 (38.58 RT)		139		SECOND THRU LANE MARKING
	BLUE RIDGE BLVD	S. FRONTAGE RD.	5+67.99 (136.40 LT)	5+04.27 (78.02 LT)	87			THIRD THRU LANE MARKING
	BLUE RIDGE BLVD	S. FRONTAGE RD.	5+04.27 (78.02 LT)	4+89.51 (63.25 LT)	22			THIRD THRU LANE MARKING
	BLUE RIDGE BLVD	S. FRONTAGE RD.	4+89.51 (63.25 LT)	4+75.86 (49.91 LT)	20			THIRD THRU LANE MARKING
	BLUE RIDGE BLVD	S. FRONTAGE RD.	4+75.86 (49.91 LT)	3+85.38 (38.52 RT)		127		THIRD THRU LANE MARKING
	BLUE RIDGE BLVD	S. FRONTAGE RD.	5+77.54 (128.87 LT)	5+12.37 (69.17 LT)			87	LEFT TURN LANE
	BLUE RIDGE BLVD	S. FRONTAGE RD.	5+12.37 (69.17 LT)	4+93.19 (49.97 LT)			28	LEFT TURN LANE
		SUBTOTALS			518	393	115	
		USE			518	118	115	D.E. VALUE DIVIDED BY 3.33

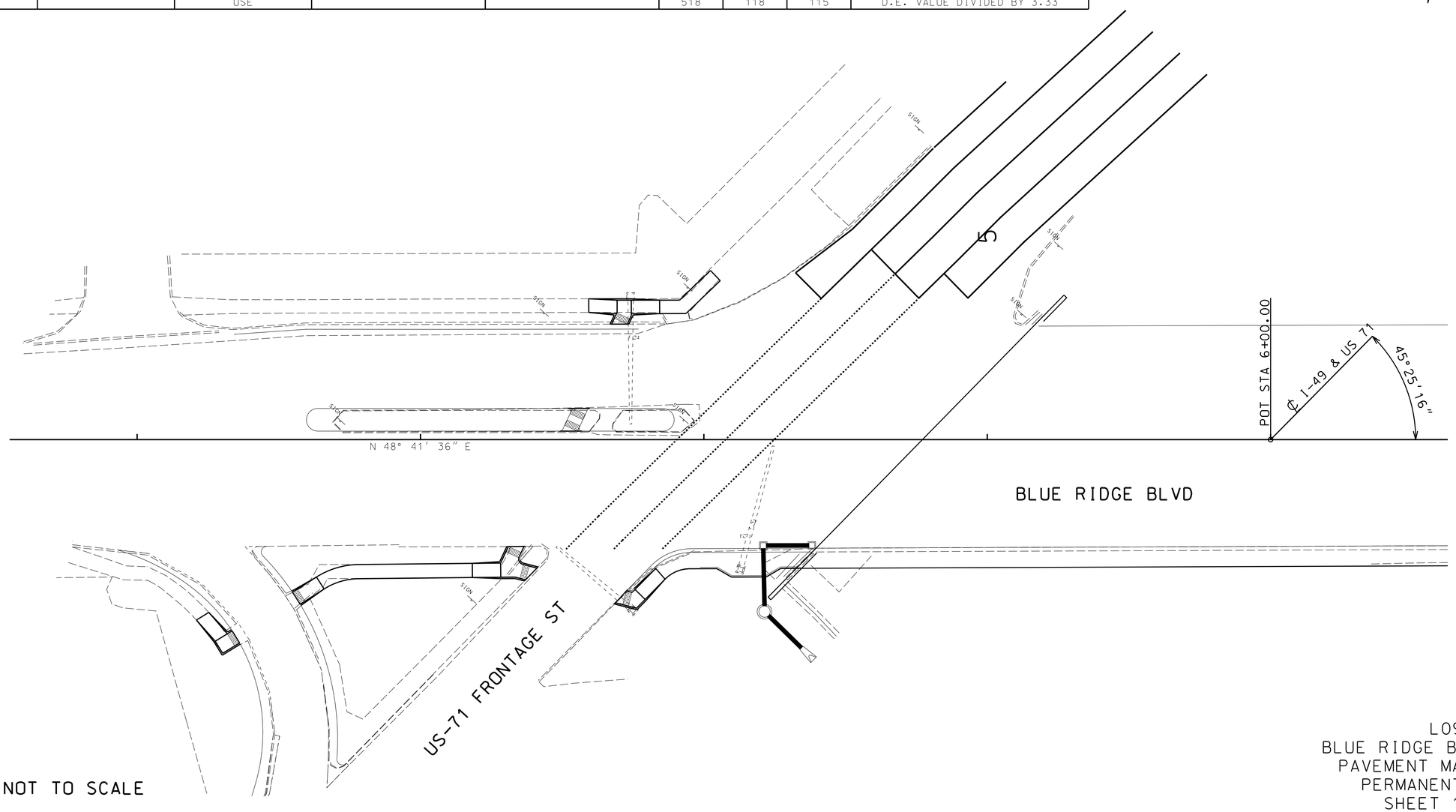

NOT TO SCALE

L09292
BLUE RIDGE BLVD OVER I-49
PAVEMENT MARKING SHEET
PERMANENT STRIPING
SHEET 15 OF 20

"THIS MEDIA SHOULD NOT BE CONSIDERED A CERTIFIED DOCUMENT."

DATE PREPARED	
12/15/2013	
ROUTE: VAR.	STATE: MO
DISTRICT: KC	SHEET NO.: 76
COUNTY: JACKSON	
JOB NO.: J4P2191	
CONTRACT ID.	
PROJECT NO.	
BRIDGE NO.: L09292	

DESCRIPTION	DATE

MISSOURI HIGHWAYS AND TRANSPORTATION COMMISSION
105 WEST CAPITOL
JEFFERSON CITY, MO 65102
1-888-ASK-MODOT (1-888-275-6636)

IF A SEAL IS PRESENT ON THIS SHEET IT HAS BEEN ELECTRONICALLY SEALED AND DATED.

REV.

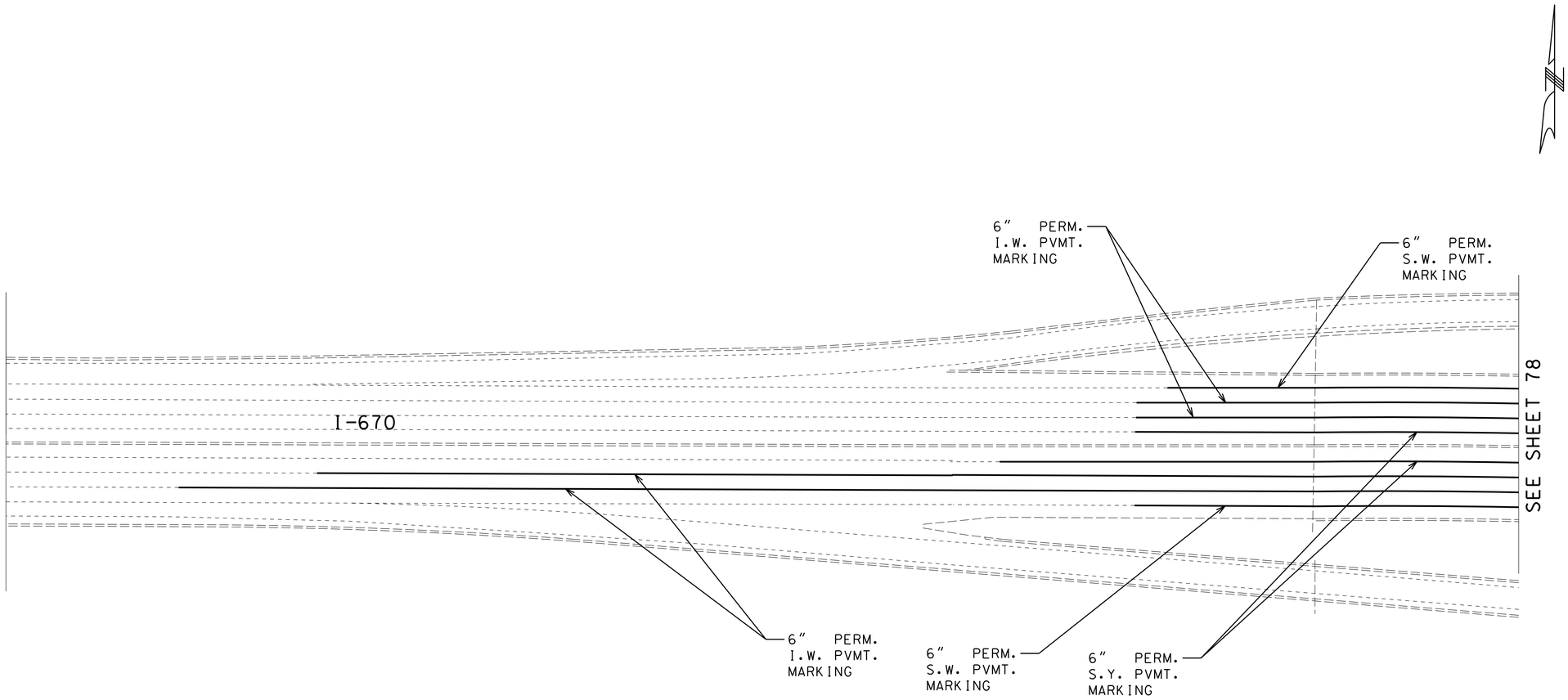

NOT TO SCALE

A31361/A31362/A31391/A31401
I-670/RAMPS OVER VARIOUS STREETS
PAVEMENT MARKING SHEET
PERMANENT STRIPING
SHEET 16 OF 20

"THIS MEDIA SHOULD NOT BE CONSIDERED A CERTIFIED DOCUMENT."

DATE PREPARED	
12/15/2013	
ROUTE	STATE
VAR.	MO
DISTRICT	SHEET NO.
KC	77
COUNTY	
JACKSON	
JOB NO.	
J4P2191	
CONTRACT ID.	
PROJECT NO.	
BRIDGE NO.	
A31361/A31362 A31391/A31401	

DATE	DESCRIPTION

MISSOURI HIGHWAYS AND TRANSPORTATION COMMISSION

105 WEST CAPITOL
JEFFERSON CITY, MO 65102
1-888-ASK-MODOT (1-888-275-6636)

IF A SEAL IS PRESENT ON THIS SHEET IT HAS BEEN ELECTRONICALLY SEALED AND DATED.

REV.

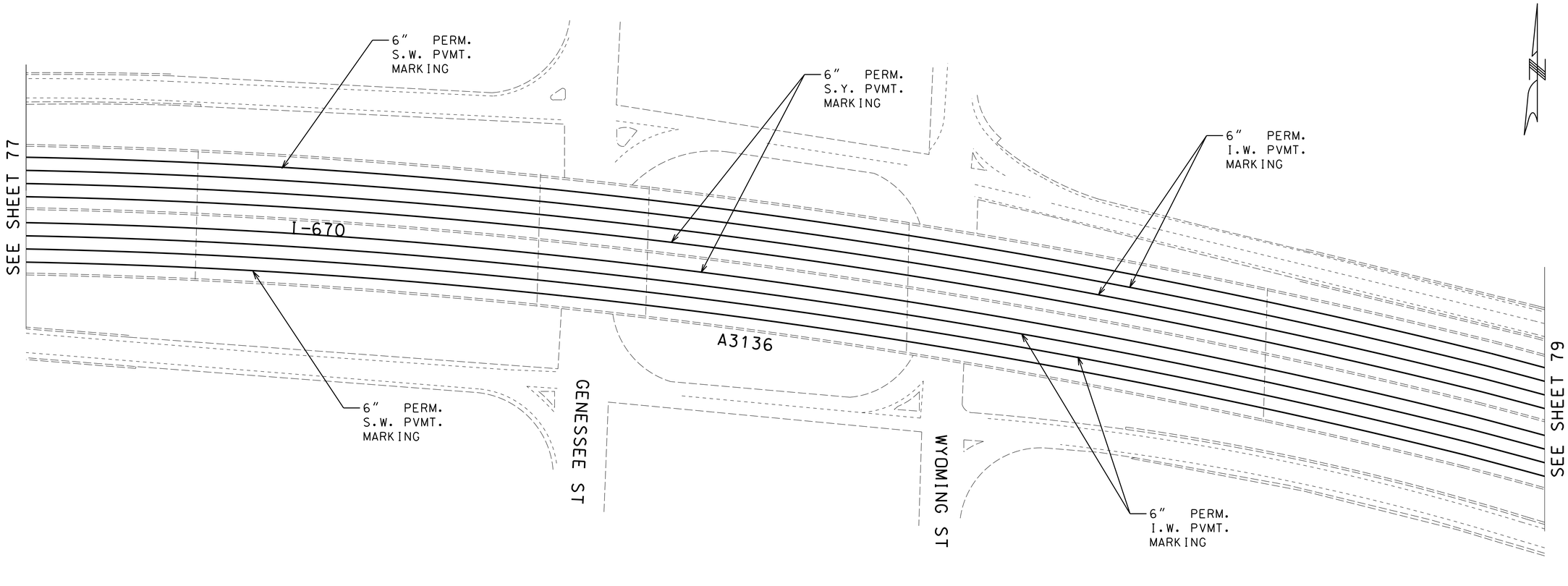

NOT TO SCALE

A31361/A31362/A31391/A31401
I-670/RAMPS OVER VARIOUS STREETS
PAVEMENT MARKING SHEET
PERMANENT STRIPING
SHEET 17 OF 20

"THIS MEDIA SHOULD NOT BE CONSIDERED A CERTIFIED DOCUMENT."

DATE PREPARED	12/15/2013
ROUTE	VAR.
STATE	MO
DISTRICT	KC
SHEET NO.	78
COUNTY	JACKSON
JOB NO.	J4P2191
CONTRACT ID.	
PROJECT NO.	
BRIDGE NO.	A31361/A31362 A31391/A31401

DATE	DESCRIPTION

MISSOURI HIGHWAYS AND TRANSPORTATION COMMISSION

105 WEST CAPITOL
JEFFERSON CITY, MO 65102
1-888-ASK-MODOT (1-888-275-6636)

IF A SEAL IS PRESENT ON THIS SHEET IT HAS BEEN ELECTRONICALLY SEALED AND DATED.

REV.

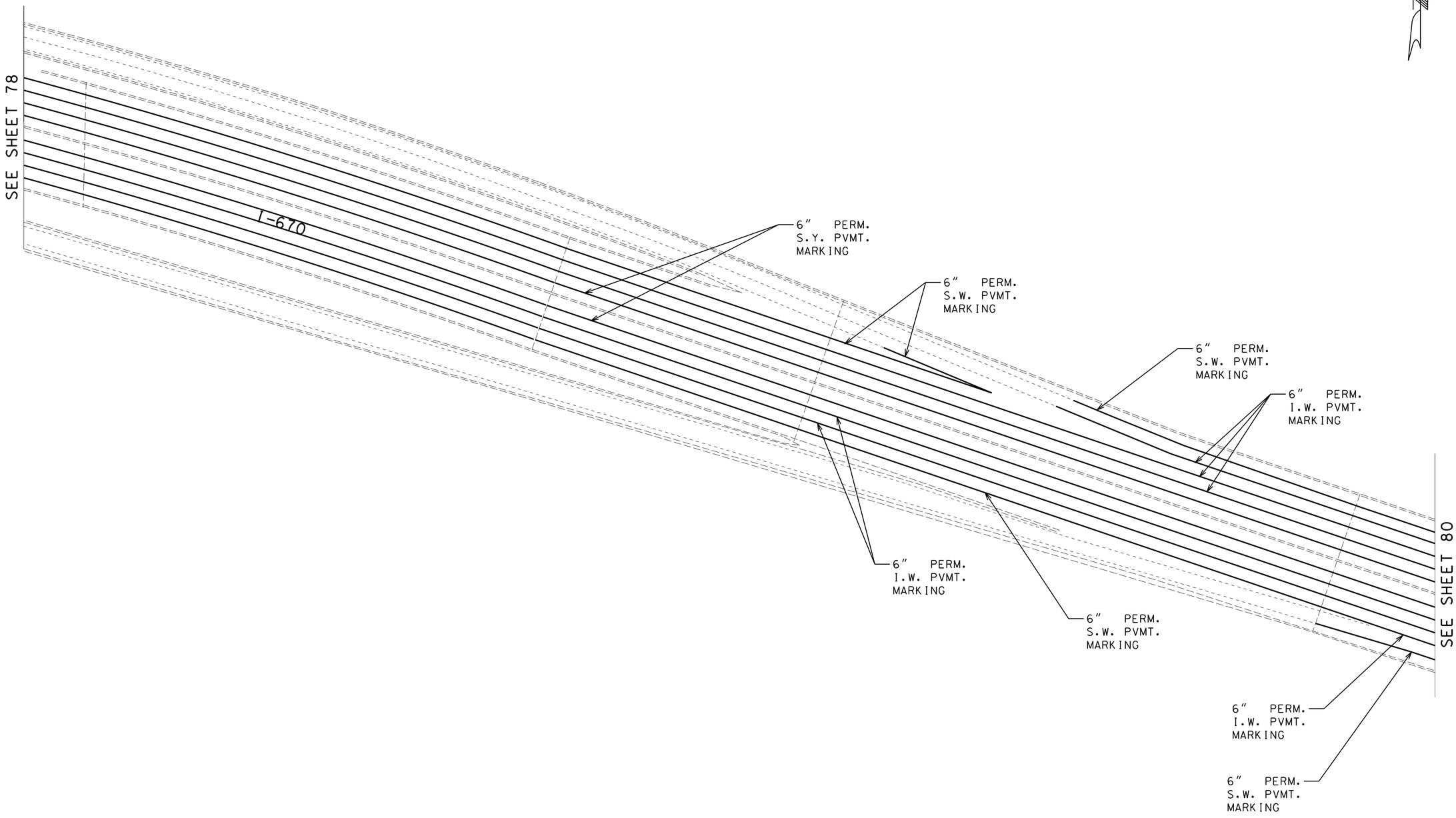

NOT TO SCALE

A31361/A31362/A31391/A31401
I-670/RAMPS OVER VARIOUS STREETS
PAVEMENT MARKING SHEET
SHEET 18 OF 20

"THIS MEDIA SHOULD NOT BE CONSIDERED A CERTIFIED DOCUMENT."

DATE PREPARED	12/15/2013
ROUTE	VAR.
STATE	MO
DISTRICT	KC
SHEET NO.	79
COUNTY	JACKSON
JOB NO.	J4P2191
CONTRACT ID.	
PROJECT NO.	
BRIDGE NO.	A31361/A31362 A31391/A31401

DATE	DESCRIPTION

MISSOURI HIGHWAYS AND TRANSPORTATION COMMISSION

105 WEST CAPITOL
JEFFERSON CITY, MO 65102
1-888-ASK-MODOT (1-888-275-6636)

IF A SEAL IS PRESENT ON THIS SHEET IT HAS BEEN ELECTRONICALLY SEALED AND DATED.

REV.

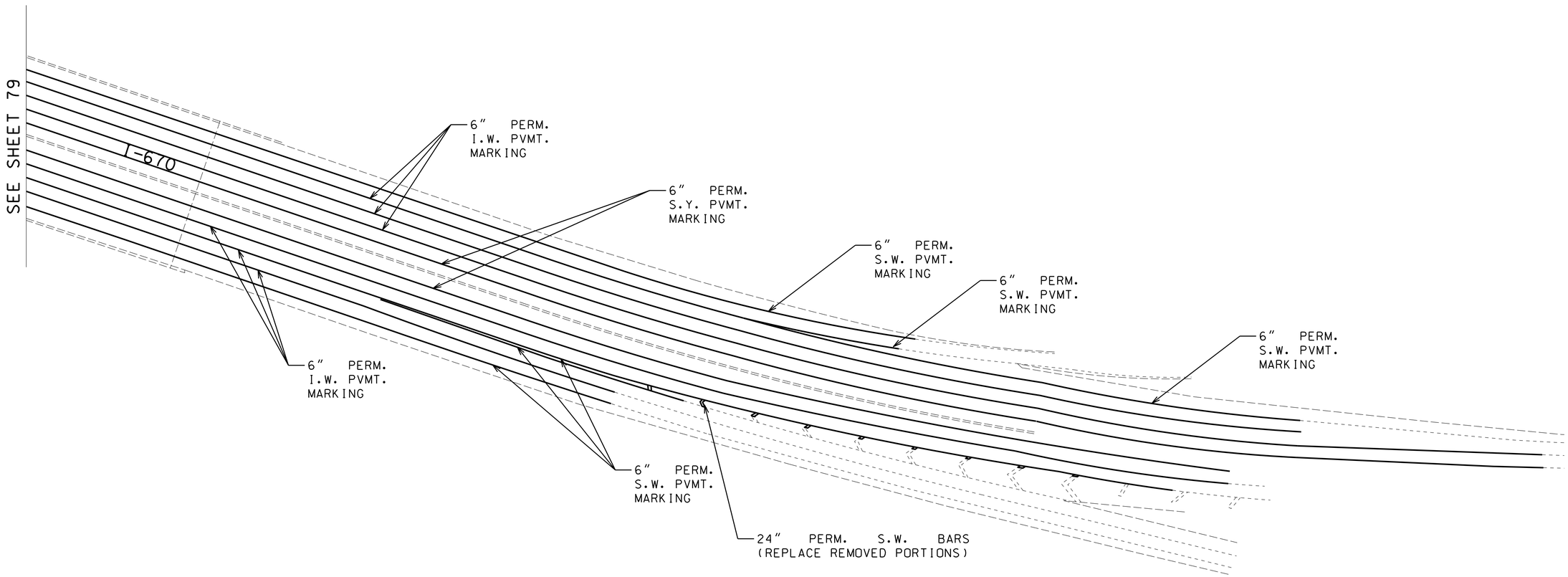

NOT TO SCALE

A31361/A31362/A31391/A31401
I-670/RAMPS OVER VARIOUS STREETS
PAVEMENT MARKING SHEET
PERMANENT STRIPING
SHEET 19 OF 20

"THIS MEDIA SHOULD NOT BE CONSIDERED A CERTIFIED DOCUMENT."

DATE PREPARED	12/15/2013
ROUTE	VAR.
STATE	MO
DISTRICT	KC
SHEET NO.	80
COUNTY	JACKSON
JOB NO.	J4P2191
CONTRACT ID.	
PROJECT NO.	
BRIDGE NO.	A31361/A31362 A31391/A31401

DATE	DESCRIPTION

MISSOURI HIGHWAYS AND TRANSPORTATION COMMISSION
105 WEST CAPITOL
JEFFERSON CITY, MO 65102
1-888-ASK-MODOT (1-888-275-6636)

IF A SEAL IS PRESENT ON THIS SHEET IT HAS BEEN ELECTRONICALLY SEALED AND DATED.

REV.

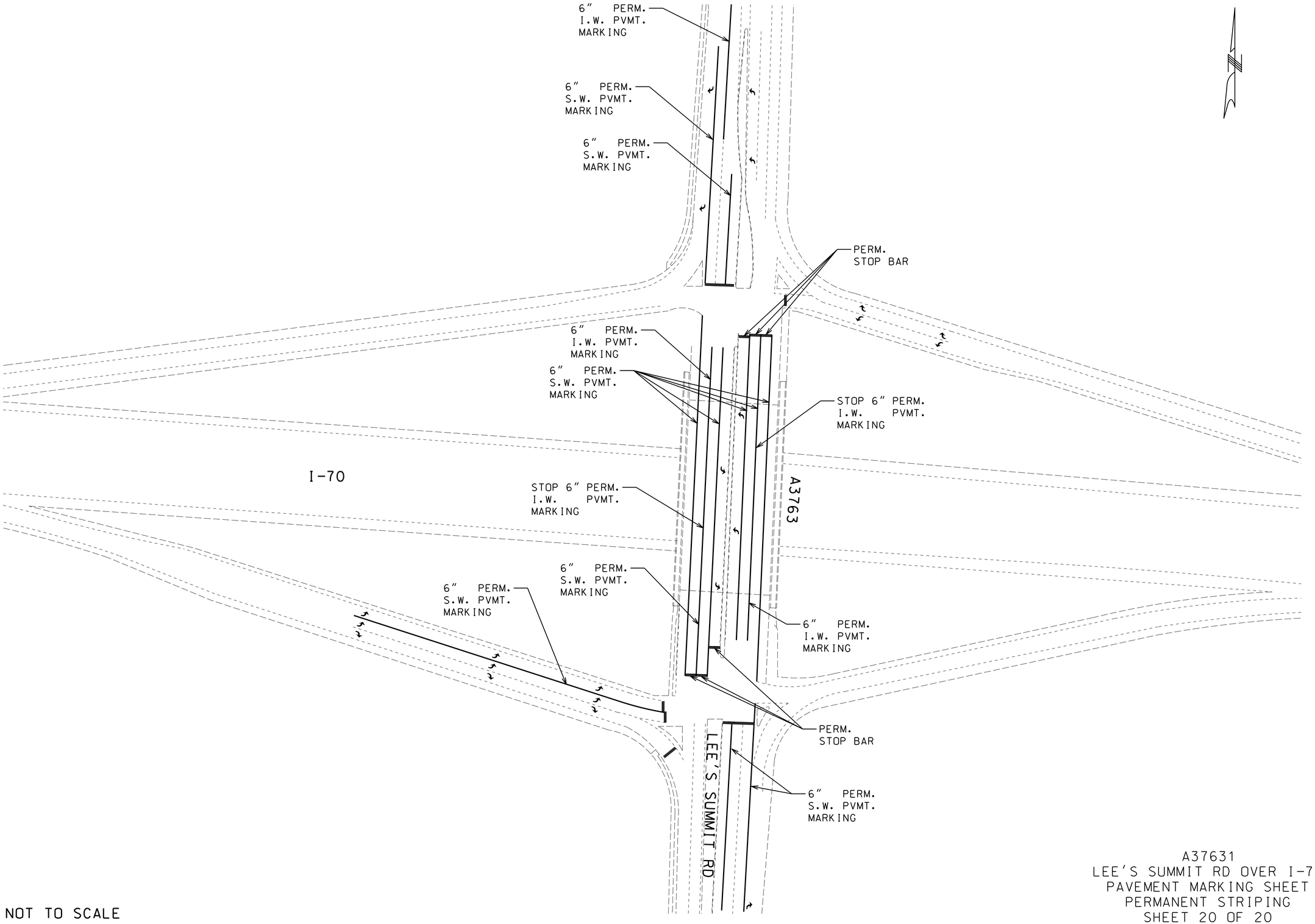

NOT TO SCALE

A37631
LEE'S SUMMIT RD OVER I-70
PAVEMENT MARKING SHEET
PERMANENT STRIPING
SHEET 20 OF 20

"THIS MEDIA SHOULD NOT BE CONSIDERED A CERTIFIED DOCUMENT."

DATE PREPARED	12/15/2013
ROUTE	VAR.
STATE	MO
DISTRICT	KC
SHEET NO.	81
COUNTY	JACKSON
JOB NO.	J4P2191
CONTRACT ID.	
PROJECT NO.	
BRIDGE NO.	A37631

DATE	DESCRIPTION

MISSOURI HIGHWAYS AND TRANSPORTATION COMMISSION

105 WEST CAPITOL
JEFFERSON CITY, MO 65102
1-888-ASK-MODOT (1-888-275-6636)

IF A SEAL IS PRESENT ON THIS SHEET IT HAS BEEN ELECTRONICALLY SEALED AND DATED.

REV.

MISSOURI HIGHWAYS AND TRANSPORTATION COMMISSION

U.I.P. AND REHABILITATE EXISTING (44'-79'-56') CONTINUOUS CONCRETE BOX GIRDER SPANS

SEC/SUR 14 TWP 49N RGE 33W

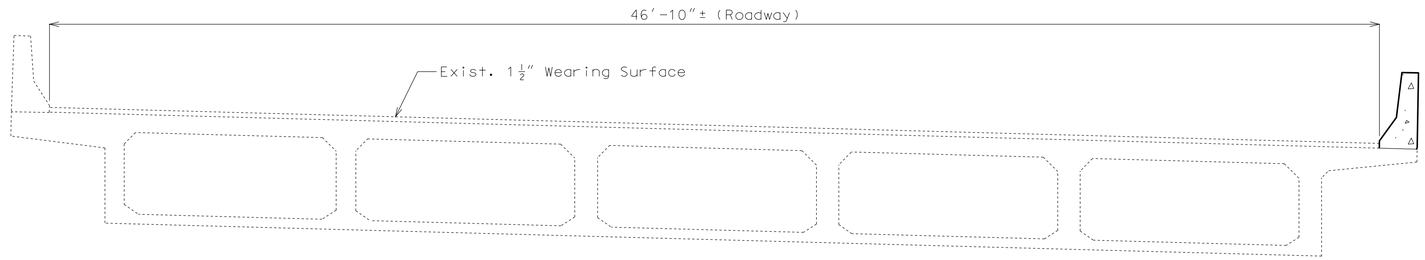

TYPICAL SECTION THRU SLAB

GENERAL NOTES:

Design Specifications:

2002 - AASHTO (17th Edition) Standard Specifications
Bridge Deck Rating = 6

Design Loading:

H20-S16-44 (Alternate Military) (1957 & New Construction)

Design Unit Stresses:

Class B-1 Concrete (Slab & Safety Barrier Curb) f'c = 4,000 psi

Reinforcing Steel (Grade 60) fy = 60,000 psi

Joint Filler:

All joint filler shall be in accordance with Sec 1057 for preformed sponge rubber expansion and partition joint filler, except as noted.

Reinforcing Steel:

Minimum clearance to reinforcing steel shall be 1½", unless otherwise shown.

All new reinforcing steel shall be epoxy coated.

Miscellaneous:

Bars bonded in old concrete not removed shall be cleanly stripped and embedded into new concrete where possible. If length is available, old bars shall extend into new concrete at least 40 diameters for smooth bars and 30 diameters for deformed bars, unless otherwise noted.

Outline of old work is indicated by light dashed lines. Heavy lines indicate new work.

Contractor shall verify all dimensions in field before ordering new material.

The area exposed by the removal of concrete and not covered with new concrete shall be coated with an approved qualified special mortar in accordance with Sec 704.

Traffic Handling:

See Sheet No. 2 for Details of Stage Construction and Roadway Plans for Traffic Control.

Estimated Quantities

	Item		Total
	Removal of Existing Expansion Joints & Adjacent Concrete	linear foot	120
***	Remove and Replace Safety Barrier Curb	linear foot	8
**	Curb Removal	linear foot	222
	Class B-1 Concrete	cu. yard	8.3
*	Safety Barrier Curb	linear foot	222
	Reinforcing Steel (Epoxy Coated)	pound	530
	Strip Seal Joint Expansion System	linear foot	120

* Safety Barrier Curb (Right Side) shall be cast-in-place option or slip-form option.

** Safety barrier curb on right side.

*** Left side only.

REPAIRS TO BRIDGE: RTE. I-70 WB
OVER JACKSON AVENUE

STATE ROAD FROM I-35 TO I-435

IN KANSAS CITY

STA. 8+83.29±(MATCH EXISTING)

STD. 617.10
STD. 617.20
STD. 706.35

Detailed July 2013
Checked Aug. 2013

Note: This drawing is not to scale. Follow dimensions.

"THIS MEDIA SHOULD NOT BE CONSIDERED A CERTIFIED DOCUMENT."

DATE PREPARED 12/12/2013

ROUTE I-70 | STATE MO

DISTRICT BR | SHEET NO. 1

COUNTY JACKSON

JOB NO. J4P2191

CONTRACT ID.

PROJECT NO.

BRIDGE NO. A03154

DESCRIPTION

DATE

MISSOURI HIGHWAYS AND TRANSPORTATION COMMISSION

105 WEST CAPITOL
JEFFERSON CITY, MO 65102
1-888-ASK-MODOT (1-888-275-6636)

IF A SEAL IS PRESENT ON THIS SHEET IT HAS BEEN ELECTRONICALLY SEALED AND DATED.

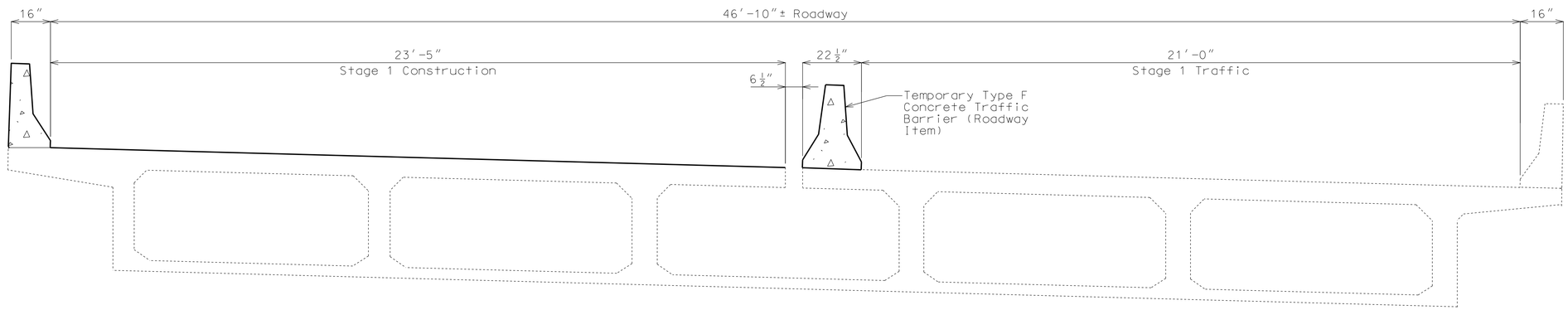

STAGE 1 CONSTRUCTION

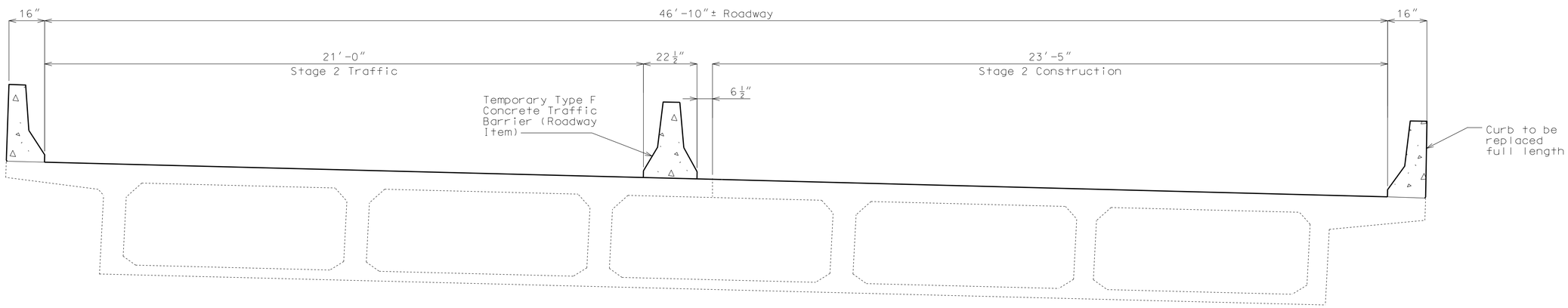

STAGE 2 CONSTRUCTION

Note:

Method of attachment for the Type F Temporary Barrier shall be the Tie-Down Strap.

DETAILS OF STAGE CONSTRUCTION FOR JOINT REPLACEMENT

(Existing 1 1/2" wearing surface not shown for clarity)

Detailed July 2013
Checked Aug. 2013

Note: This drawing is not to scale. Follow dimensions.

"THIS MEDIA SHOULD NOT BE CONSIDERED A CERTIFIED DOCUMENT."

DATE PREPARED	12/12/2013
ROUTE	I-70
STATE	MO
DISTRICT	BR
SHEET NO.	2
COUNTY	JACKSON
JOB NO.	J4P2191
CONTRACT ID.	
PROJECT NO.	
BRIDGE NO.	A03154

DATE	DESCRIPTION

MISSOURI HIGHWAYS AND TRANSPORTATION COMMISSION
105 WEST CAPITOL
JEFFERSON CITY, MO 65102
1-888-ASK-MODOT (1-888-275-6636)

IF A SEAL IS PRESENT ON THIS SHEET IT HAS BEEN ELECTRONICALLY SEALED AND DATED.

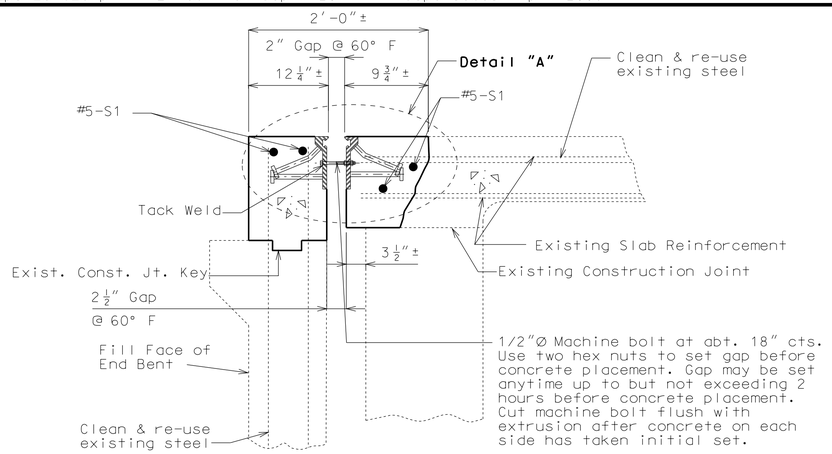

SECTION A-A

Note: Strip seal gland not shown for clarity.

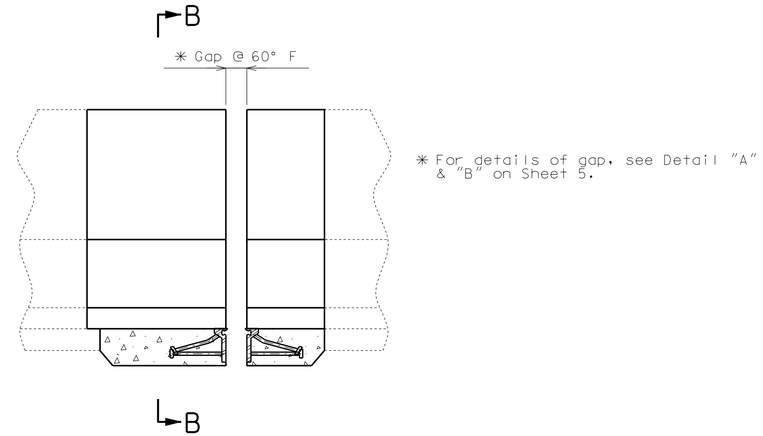

Note: Strip seal gland not shown for clarity.

PART ELEVATION OF LEFT BARRIER CURB

GENERAL NOTES:

Expansion joint system shall be fabricated in one section, except for stage construction and when the length is over 50 feet. A complete joint penetration groove welded splice shall be required. Welds shall be ground flush to provide a smooth surface. The expansion joint system shall be fabricated and installed to the crown and grade of the roadway.

The strip seal gland shall be installed in joints in one continuous piece without field splices. Factory splicing will be permitted for joints in excess of 53 feet.

Structural steel for the expansion joint system shall be ASTM A709 Grade 36 except the steel armor may be ASTM A709 Grade 50W. Anchors for the expansion joint system shall be in accordance with Sec 1037. Strip seal expansion joint system shall be in accordance with Sec 717.

Structural steel for the expansion joint system shall be coated with a minimum of two coats of inorganic zinc primer (5 mils minimum) or galvanized in accordance with ASTM A123. Anchors need not be protected from overspray.

Plan dimensions are based on installation at 60°F. The expansion gap and other dimensions shall be increased or decreased $\frac{1}{16}$" for each 10° fall or rise in temperature at installation.

Longitudinal reinforcing steel shall be cut/bent so that ends shall not be more than ±1" from vertical leg of the steel armor at the expansion joint system.

Concrete shall be forced under and around steel armor and anchors. Proper consolidation of the concrete shall be achieved by localized internal vibration.

For Limits of Removal of Left existing Safety Barrier Curb, see Sheet No. 7.

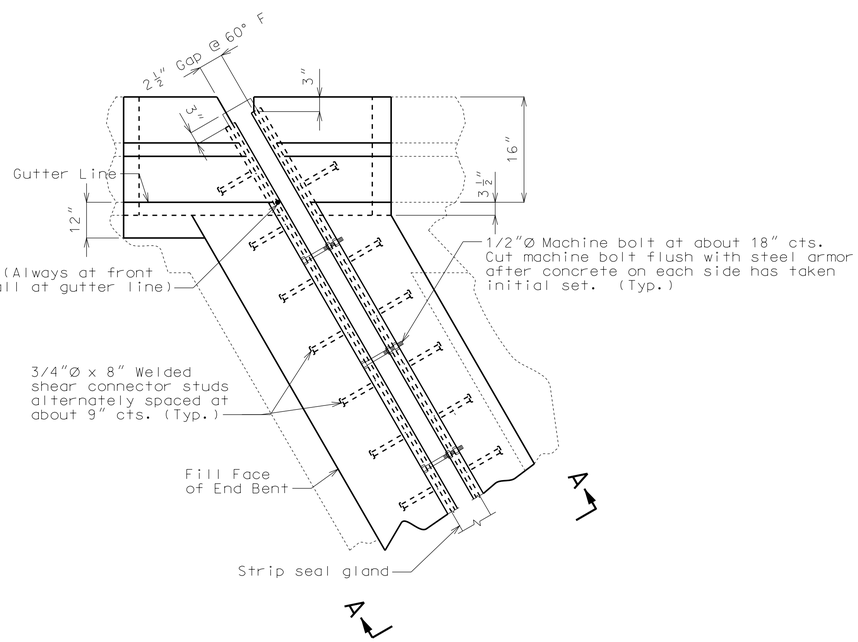

PART PLAN

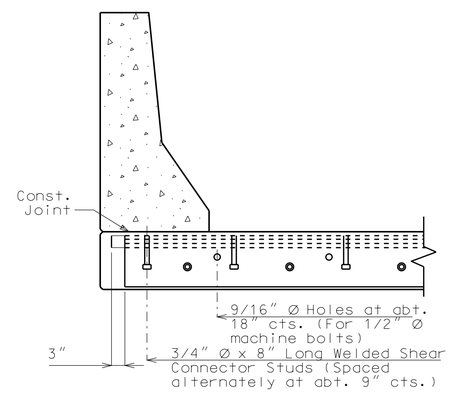

PART SECTION B-B

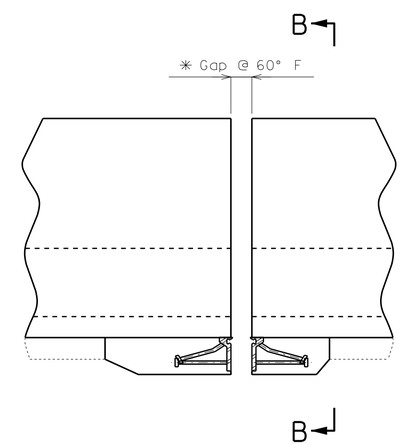

Note: Strip seal gland not shown for clarity.

PART ELEVATION OF RIGHT BARRIER CURB

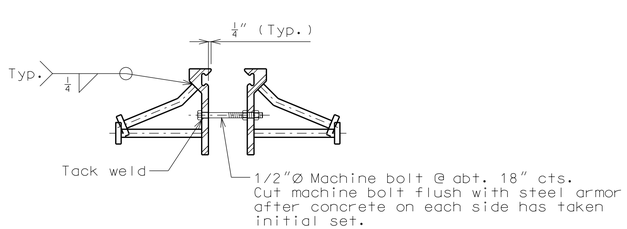

DETAIL "A"

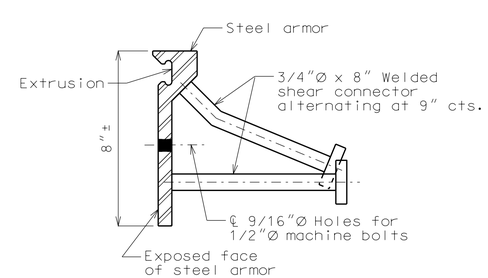

DETAIL OF JOINT ARMOR

Strip seal gland size = 3"

DETAIL OF GLAND

DETAILS OF STRIP SEAL AT END BENT NO. 1

(Existing $1\frac{1}{2}$" wearing surface not shown for clarity)

Detailed July 2013
Checked Aug. 2013

Note: This drawing is not to scale. Follow dimensions.

"THIS MEDIA SHOULD NOT BE CONSIDERED A CERTIFIED DOCUMENT."

DATE PREPARED	
12/12/2013	
ROUTE	STATE
I-70	MO
DISTRICT	SHEET NO.
BR	3
COUNTY	
JACKSON	
JOB NO.	
J4P2191	
CONTRACT ID.	
PROJECT NO.	
BRIDGE NO.	
A03154	

DATE	DESCRIPTION

MISSOURI HIGHWAYS AND TRANSPORTATION COMMISSION

105 WEST CAPITOL
JEFFERSON CITY, MO 65102
1-888-ASK-MODOT (1-888-275-6636)

IF A SEAL IS PRESENT ON THIS SHEET IT HAS BEEN ELECTRONICALLY SEALED AND DATED.

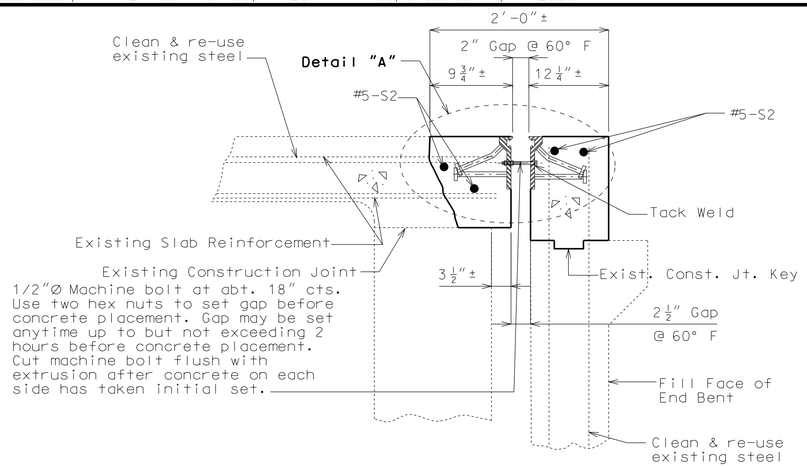

SECTION A-A

Note: Strip seal gland not shown for clarity.

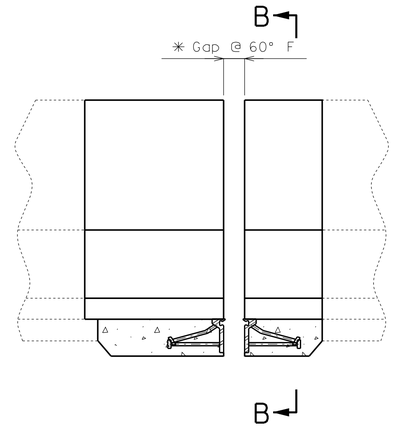

Note: Strip seal gland not shown for clarity.

PART ELEVATION OF LEFT BARRIER CURB

* For details of gap, see Detail "A" & "B" on Sheet 6.

GENERAL NOTES:

Expansion joint system shall be fabricated in one section, except for stage construction and when the length is over 50 feet. A complete joint penetration groove welded splice shall be required. Welds shall be ground flush to provide a smooth surface. The expansion joint system shall be fabricated and installed to the crown and grade of the roadway.

The strip seal gland shall be installed in joints in one continuous piece without field splices. Factory splicing will be permitted for joints in excess of 53 feet.

Structural steel for the expansion joint system shall be ASTM A709 Grade 36 except the steel armor may be ASTM A709 Grade 50W. Anchors for the expansion joint system shall be in accordance with Sec 1037. Strip seal expansion joint system shall be in accordance with Sec 717.

Structural steel for the expansion joint system shall be coated with a minimum of two coats of inorganic zinc primer (5 mils minimum) or galvanized in accordance with ASTM A123. Anchors need not be protected from overspray.

Plan dimensions are based on installation at 60°F. The expansion gap and other dimensions shall be increased or decreased $\frac{1}{16}$" for each 10° fall or rise in temperature at installation.

Longitudinal reinforcing steel shall be cut/bent so that ends shall not be more than ±1" from vertical leg of the steel armor at the expansion joint system.

Concrete shall be forced under and around steel armor and anchors. Proper consolidation of the concrete shall be achieved by localized internal vibration.

For Limits of Removal of Left existing Safety Barrier Curb, see Sheet No. 7.

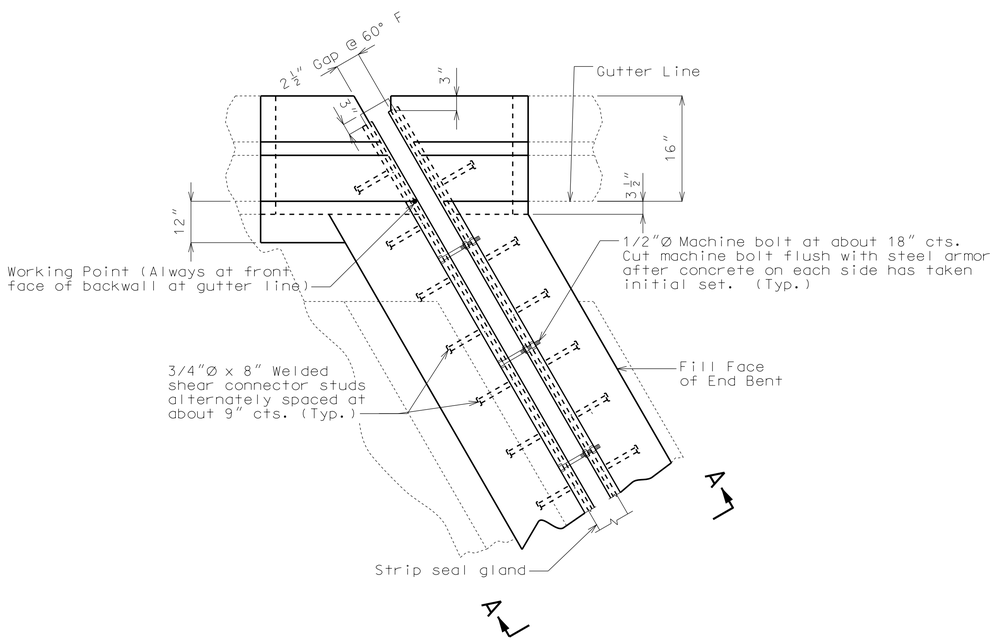

PART PLAN

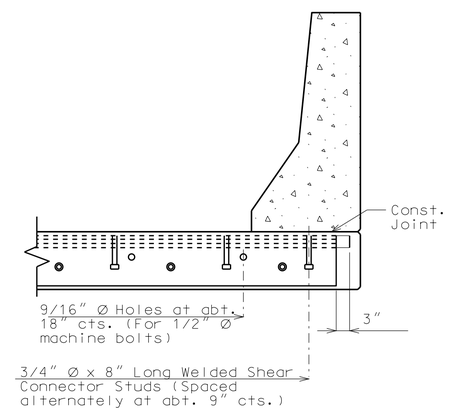

PART SECTION B-B

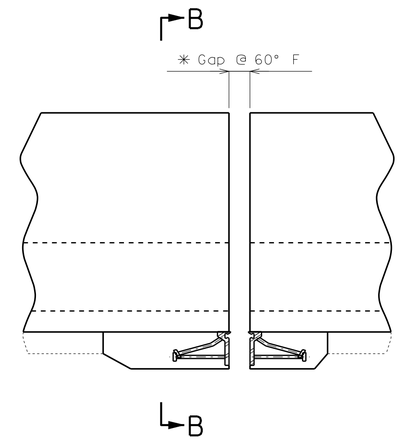

Note: Strip seal gland not shown for clarity.

PART ELEVATION OF RIGHT BARRIER CURB

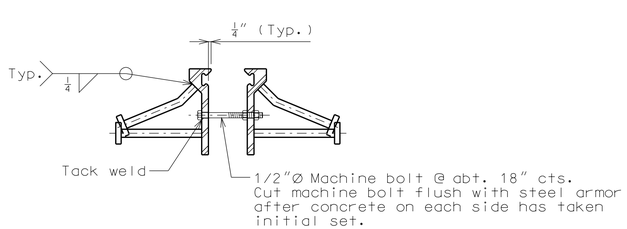

DETAIL "A"

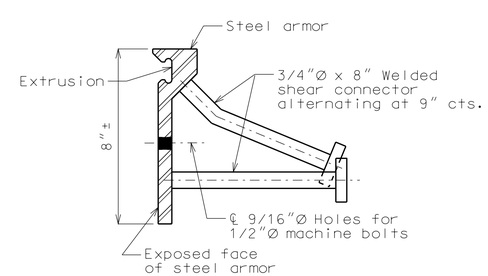

DETAIL OF JOINT ARMOR

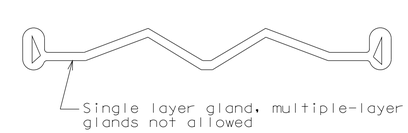

Strip seal gland size = 3"

DETAIL OF GLAND

DETAILS OF STRIP SEAL AT END BENT NO. 4

(Existing 1 1/2" wearing surface not shown for clarity)

Detailed July 2013
Checked Aug. 2013

Note: This drawing is not to scale. Follow dimensions.

"THIS MEDIA SHOULD NOT BE CONSIDERED A CERTIFIED DOCUMENT."

DATE PREPARED	
12/12/2013	
ROUTE: I-70	STATE: MO
DISTRICT: BR	SHEET NO.: 4
COUNTY: JACKSON	
JOB NO.: J4P2191	
CONTRACT ID.	
PROJECT NO.	
BRIDGE NO.: A03154	

DATE	DESCRIPTION

MISSOURI HIGHWAYS AND TRANSPORTATION COMMISSION
105 WEST CAPITOL
JEFFERSON CITY, MO 65102
1-888-ASK-MODOT (1-888-275-6636)

IF A SEAL IS PRESENT ON THIS SHEET IT HAS BEEN ELECTRONICALLY SEALED AND DATED.

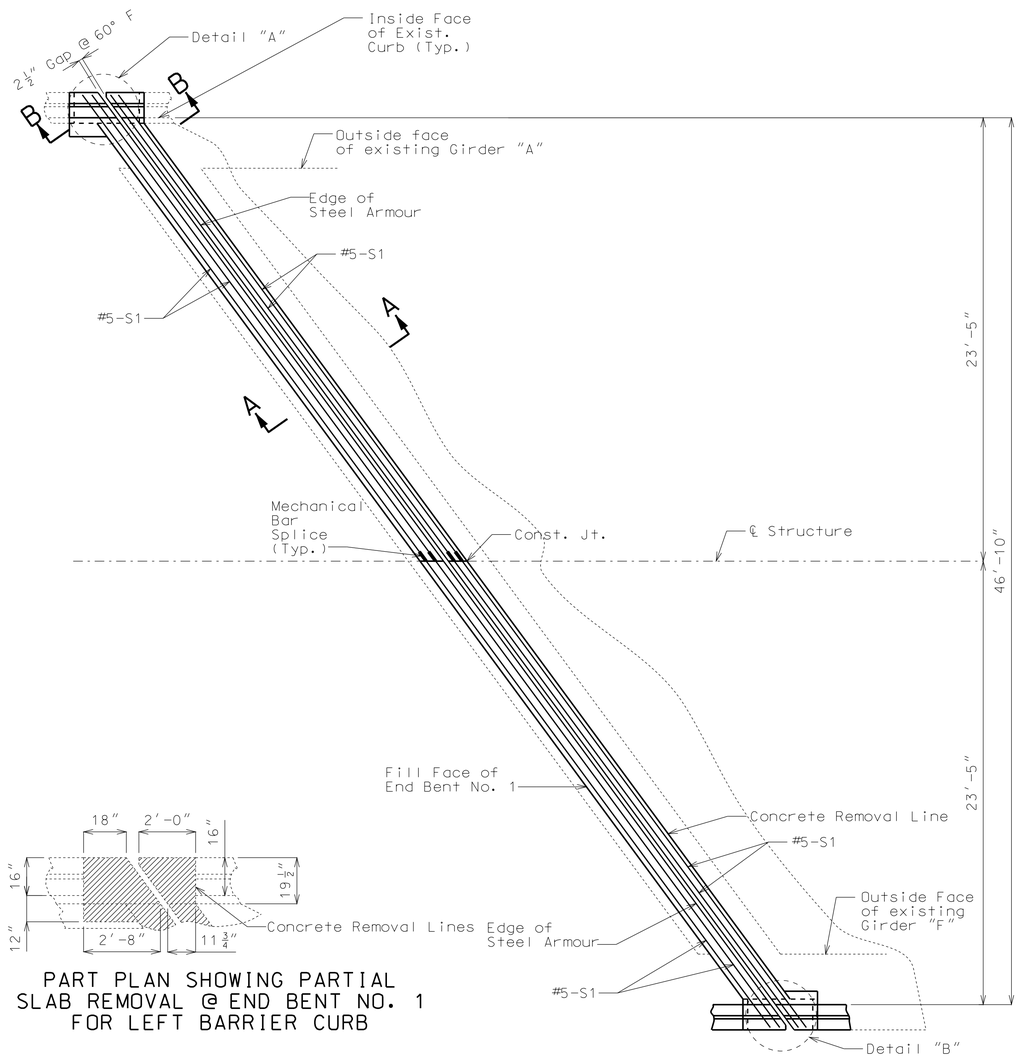

PART PLAN OF SLAB @ END BENT NO. 1 SHOWING REINFORCEMENT

Existing reinforcement not shown for clarity.

PART PLAN SHOWING PARTIAL SLAB REMOVAL @ END BENT NO. 1 FOR LEFT BARRIER CURB

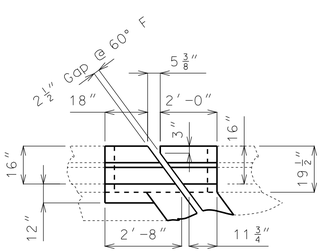

DETAIL "A"

Reinforcement not shown for clarity

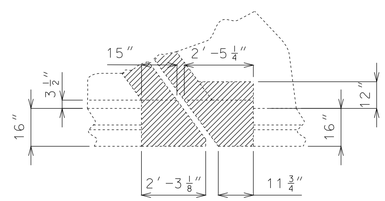

PART PLAN SHOWING PARTIAL SLAB REMOVAL @ END BENT NO. 1 FOR RIGHT BARRIER CURB

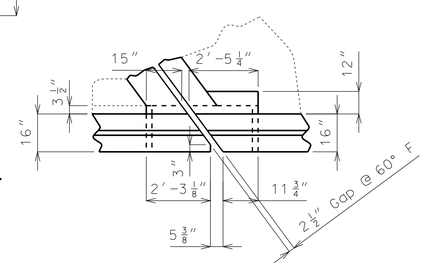

DETAIL "B"

Reinforcement not shown for clarity

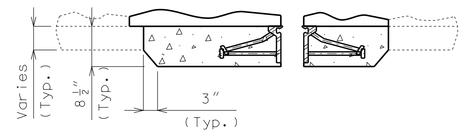

SECTION B-B

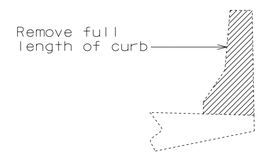

PART ELEVATION THRU RIGHT SAFETY BARRIER CURB SHOWING CURB REMOVAL

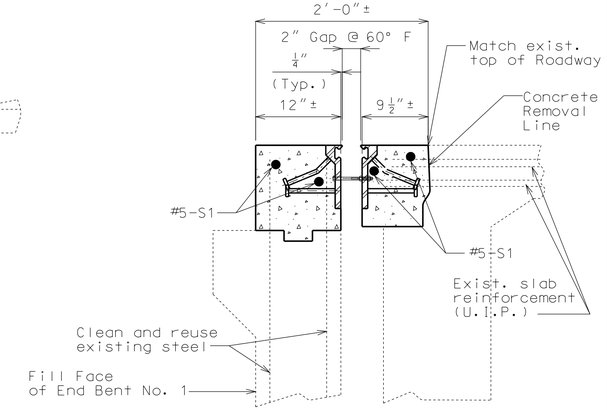

SECTION A-A

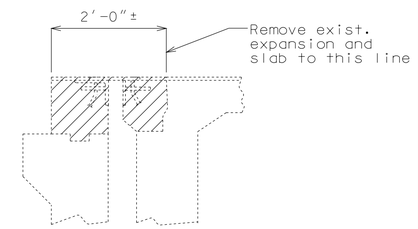

SECTION THRU END BENT SHOWING CONCRETE REMOVAL

Notes:

For details of expansion device not shown, see Sheet No. 3.

Shift #5-S1 bar where necessary to clear shear connector studs on the expansion device.

Payment for slab concrete, complete-in-place, for expansion joint replacement will be considered completely covered by the contract unit price for Class B-1 Concrete.

Payment for furnishing and installing slab reinforcing steel will be considered completely covered by the contract unit price for Reinforcing Steel (Epoxy Coated).

Cost of removing existing expansion device and slab concrete within the limits shown will be considered completely covered by the contract unit price for Removal of Existing Expansion Joints & Adjacent Concrete.

The contractor shall use a mechanical bar splice for #5-S1 bars at the location required for stage construction in accordance with the traffic control plans. The total bar lengths for bars indicated in the bill of reinforcing steel are determined based on bars located flush to the face of the construction joint. actual bar lengths shall be determined in the field with bars being field cut to the lengths needed.

No additional payment will be made for any additional bar lengths required for the mechanical bar splices. Mechanical bar splices shall be in accordance with Sec 706 except that no measurement will be made for mechanical bar splice and will be considered completely covered by the contract unit price for reinforcing steel.

DETAILS OF SLAB REINFORCEMENT @ END BENT NO. 1

(Existing 1 1/2" wearing surface not shown for clarity)

Note: This drawing is not to scale. Follow dimensions.

Sheet No. 5 of 11

Detailed July 2013
Checked Aug. 2013

"THIS MEDIA SHOULD NOT BE CONSIDERED A CERTIFIED DOCUMENT."

DATE PREPARED	
12/12/2013	
ROUTE	STATE
I-70	MO
DISTRICT	SHEET NO.
BR	5
COUNTY	
JACKSON	
JOB NO.	
J4P2191	
CONTRACT ID.	
PROJECT NO.	
BRIDGE NO.	
A03154	

DATE	DESCRIPTION

MISSOURI HIGHWAYS AND TRANSPORTATION COMMISSION

105 WEST CAPITOL
JEFFERSON CITY, MO 65102
1-888-ASK-MODOT (1-888-275-6636)

IF A SEAL IS PRESENT ON THIS SHEET IT HAS BEEN ELECTRONICALLY SEALED AND DATED.

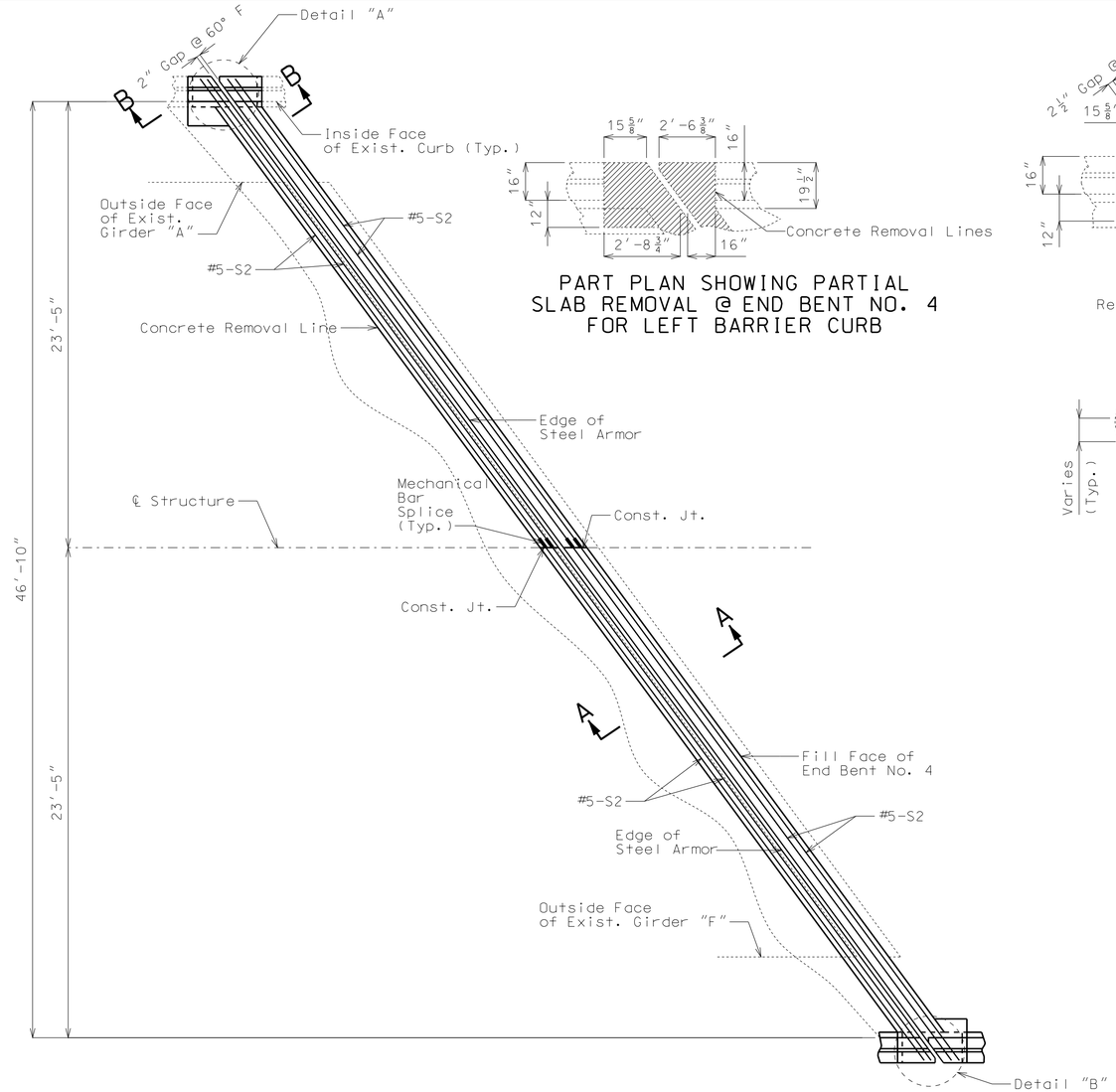

PART PLAN OF SLAB @ END BENT NO. 4 SHOWING REINFORCEMENT

Existing reinforcement not shown for clarity.

PART PLAN SHOWING PARTIAL SLAB REMOVAL @ END BENT NO. 4 FOR LEFT BARRIER CURB

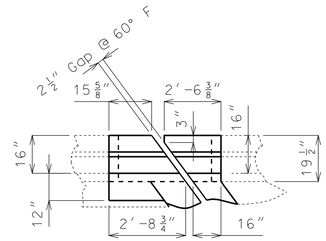

DETAIL "A"

Reinforcement not shown for clarity

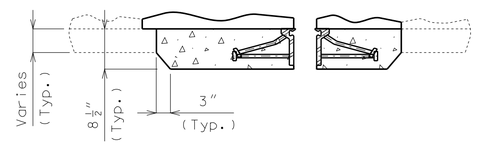

SECTION B-B

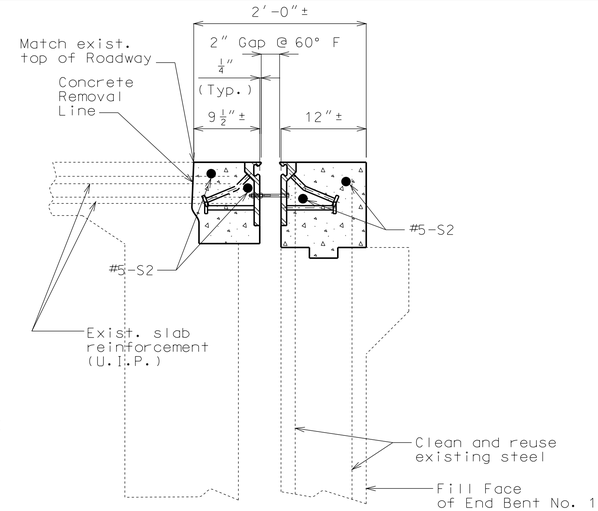

SECTION A-A

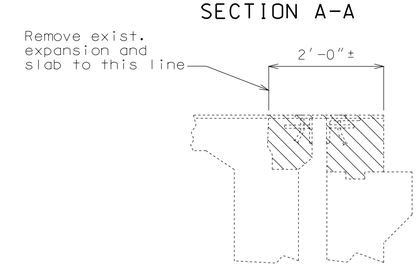

SECTION THRU END BENT SHOWING CONCRETE REMOVAL

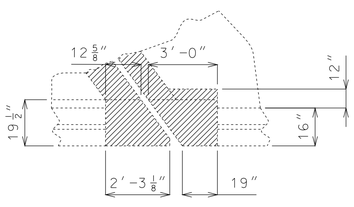

PART PLAN SHOWING PARTIAL SLAB REMOVAL @ END BENT NO. 4 FOR RIGHT BARRIER CURB

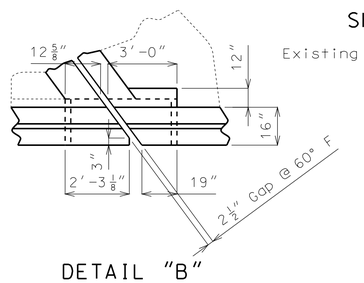

DETAIL "B"

Reinforcement not shown for clarity

Notes:

For details of expansion device not shown, see Sheet No. 4.

Shift #5-S2 bar where necessary to clear shear connector studs on the expansion device.

Payment for slab concrete, complete-in-place, for expansion joint replacement will be considered completely covered by the contract unit price for Class B-1 Concrete.

Payment for furnishing and installing slab reinforcing steel will be considered completely covered by the contract unit price for Reinforcing Steel (Epoxy Coated).

Cost of removing existing expansion device and slab concrete within the limits shown will be considered completely covered by the contract unit price for Removal of Existing Expansion Joints & Adjacent Concrete.

The contractor shall use a mechanical bar splice for #5-S2 bars at the location required for stage construction in accordance with the traffic control plans. The total bar lengths for bars indicated in the bill of reinforcing steel are determined based on bars located flush to the face of the construction joint. actual bar lengths shall be determined in the field with bars being field cut to the lengths needed.

No additional payment will be made for any additional bar lengths required for the mechanical bar splices. Mechanical bar splices shall be in accordance with Sec 706 except that no measurement will be made for mechanical bar splice and will be considered completely covered by the contract unit price for reinforcing steel.

DETAILS OF SLAB REINFORCEMENT @ END BENT NO. 4

(Existing 1 1/2" wearing surface not shown for clarity)

Detailed July 2013
Checked Aug. 2013

Note: This drawing is not to scale. Follow dimensions.

"THIS MEDIA SHOULD NOT BE CONSIDERED A CERTIFIED DOCUMENT."

DATE PREPARED	
12/12/2013	
ROUTE	STATE
I-70	MO
DISTRICT	SHEET NO.
BR	6
COUNTY	
JACKSON	
JOB NO.	
J4P2191	
CONTRACT ID.	
PROJECT NO.	
BRIDGE NO.	
A03154	

DATE	DESCRIPTION

MISSOURI HIGHWAYS AND TRANSPORTATION COMMISSION

105 WEST CAPITOL
JEFFERSON CITY, MO 65102
1-888-ASK-MODOT (1-888-275-6636)

IF A SEAL IS PRESENT ON THIS SHEET IT HAS BEEN ELECTRONICALLY SEALED AND DATED.

Notes:

Remove existing stirrups within Limits of Safety Barrier Curb Removal.

Concrete in the safety barrier curb replacement shall be Class B-1.

All exposed edges of new safety barrier curb shall match existing safety barrier curb.

Payment for concrete curb removal and all new concrete and reinforcement for barrier curb, complete-in-place, will be considered completely covered by the contract unit price for Remove and Replace Safety Barrier Curb per linear foot.

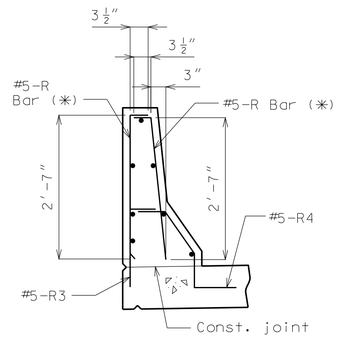

R-BAR PERMISSIBLE ALTERNATE SHAPE

(✳) The R bar may be separated into two bars as shown, at the contractor's option, only when slip forming is not used. (All dimensions are out to out.)

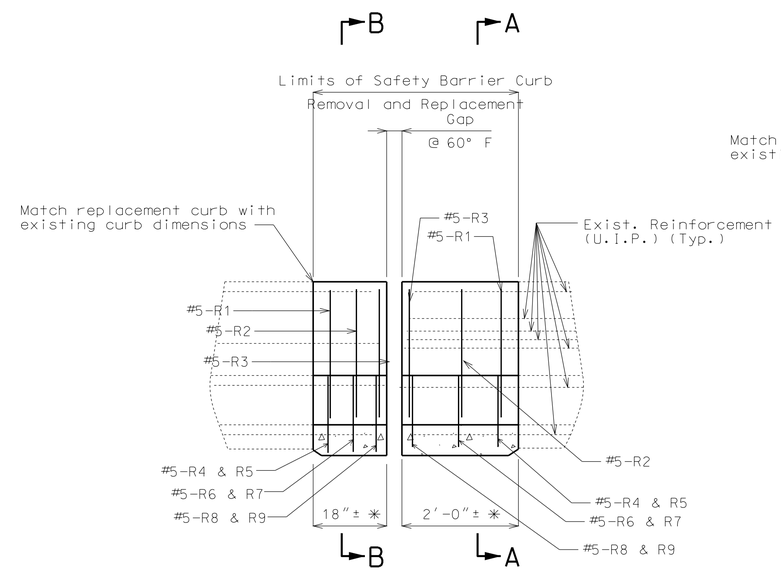

PART ELEVATION OF SAFETY BARRIER CURB

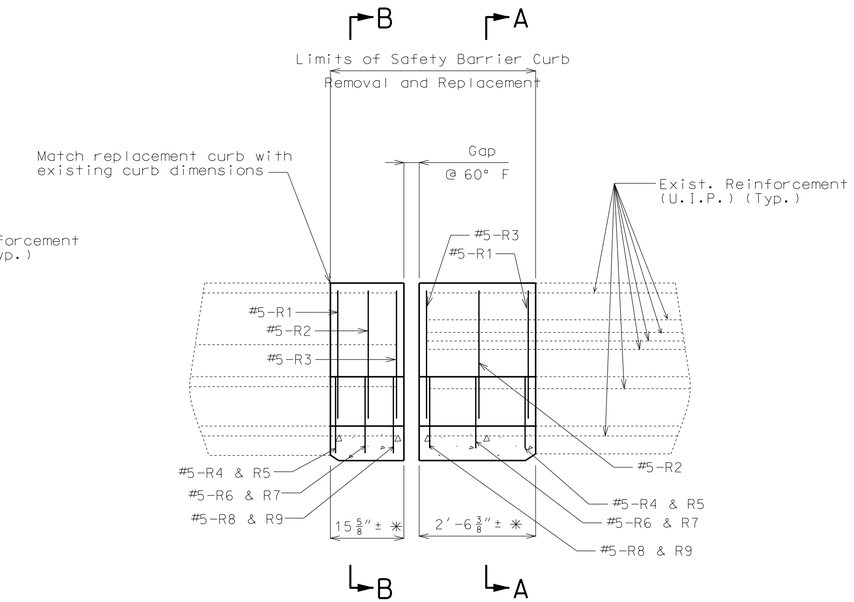

PART ELEVATION OF SAFETY BARRIER CURB

✳ Dimension is along outside face of safety barrier curb.

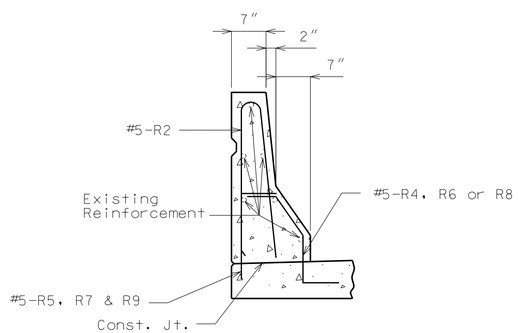

PART SECTION A-A

Note: Place transverse R-bars parallel to open joint.

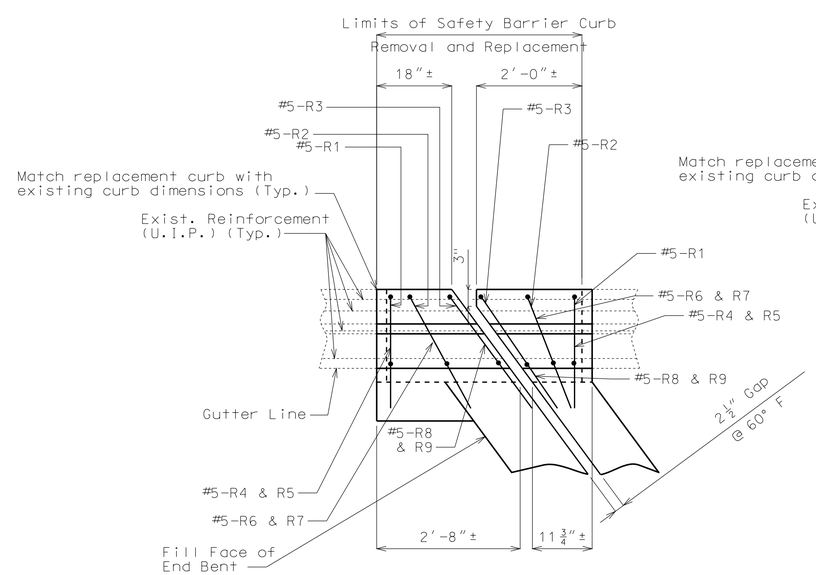

PART PLAN SHOWING LEFT BARRIER CURB REINFORCEMENT AT END BENT NO. 1

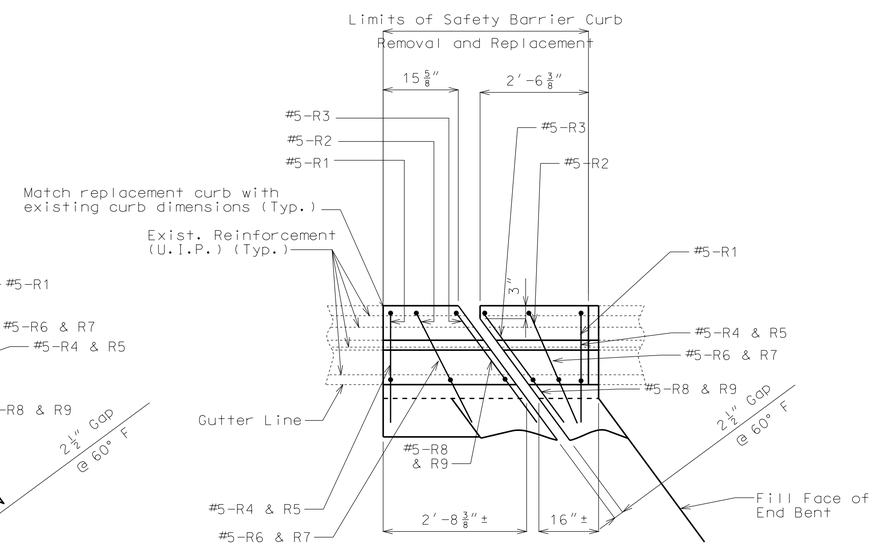

PART PLAN SHOWING LEFT BARRIER CURB REINFORCEMENT AT END BENT NO. 4

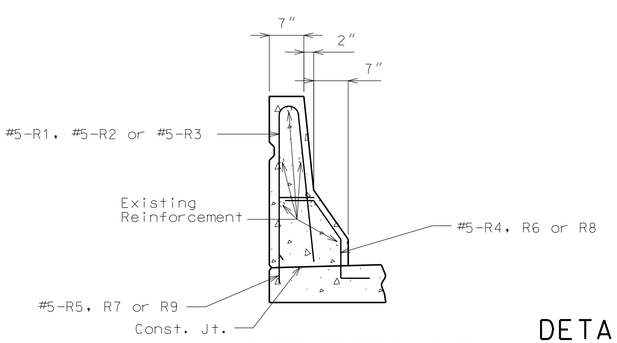

PART SECTION B-B

Note: Place transverse R-bars parallel to open joint.

DETAILS OF LEFT SAFETY BARRIER CURB SHOWING REINFORCEMENT

(Left side shown, R bars reinforcement for right side of safety barrier curb at expansion device similar)

(Existing 1 1/2" wearing surface not shown for clarity)

Detailed July 2013
Checked Aug. 2013

Note: This drawing is not to scale. Follow dimensions.

"THIS MEDIA SHOULD NOT BE CONSIDERED A CERTIFIED DOCUMENT."

DATE PREPARED	
12/12/2013	
ROUTE	STATE
I-70	MO
DISTRICT	SHEET NO.
BR	7
COUNTY	
JACKSON	
JOB NO.	
J4P2191	
CONTRACT ID.	
PROJECT NO.	
BRIDGE NO.	
A03154	

DESCRIPTION

DATE

MISSOURI HIGHWAYS AND TRANSPORTATION COMMISSION

105 WEST CAPITOL
JEFFERSON CITY, MO 65102
1-888-ASK-MODOT (1-888-275-6636)

IF A SEAL IS PRESENT ON THIS SHEET IT HAS BEEN ELECTRONICALLY SEALED AND DATED.

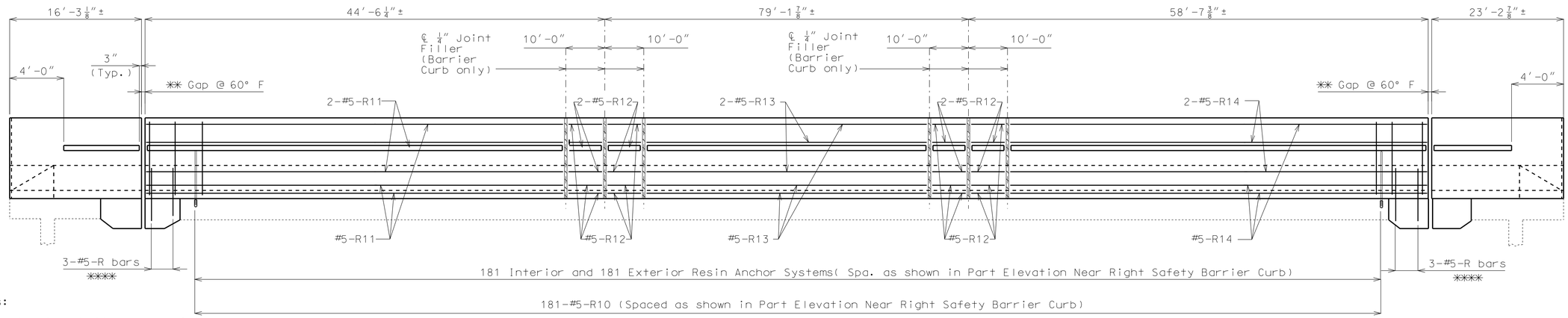

ELEVATION NEAR RIGHT SAFETY BARRIER CURB

Note: Longitudinal dimensions are horizontal.
(Existing 1 1/2" wearing surface not shown for clarity)

✱✱ See Sheets No. 6 & 7 for Detail of Safety Barrier Curb at Expansion Device.

✱✱✱✱ For details of #5-R bars, see Sheet No. 7.

Notes:

The contractor shall use one of the qualified resin anchor systems in accordance with Sec 1039.

Cost of furnishing and installing the resin anchor system complete-in-place will be considered completely covered by the contract unit price for Safety Barrier Curb.

The minimum enbedment depth in concrete with f'c= 4,000 psi for the resin anchor system shall be that required to meet the minimum ultimate pullout strength in accordance with Sec 1039 but shall not be less than 5" of the interior anchors and 3 1/2" maximum for the exterior anchors.

An epoxy coated #5 Grade 60 reinforcing bar 2'-6" long shall be sustituted for the 3/4"Ø threaded rod.

Note:

Concrete traffic barrier delineators shall be placed on top of the safety barrier curb as shown on Missouri Standard Plans 617.10 and in accordance with Sec 617. Delineators on bridges shall have retroreflective sheeting on the oncoming traffic side. Concrete traffic barrier delineators will be considered completely covered by the contract unit price for "Safety Barrier Curb".

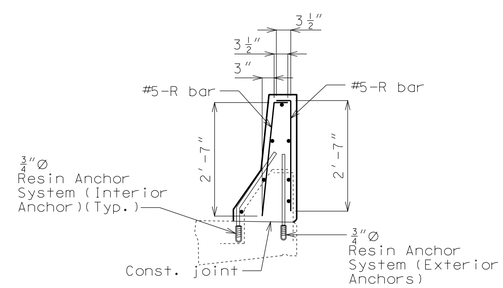

R-BAR PERMISSIBLE ALTERNATE SHAPE

(✱) The R10 bar may be separated into two bars as shown, at the contractor's option, only when slip forming is not used. (All dimensions are out to out.)

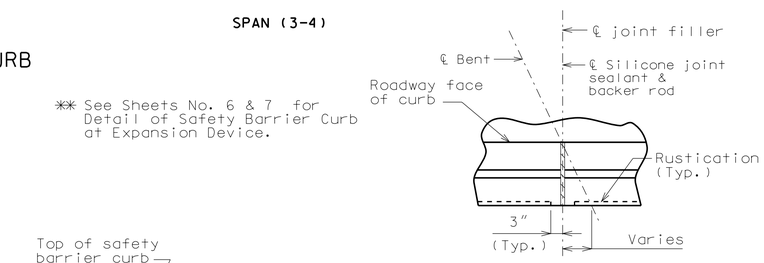

PART PLAN SHOWING SAFETY BARRIER CURB JOINT

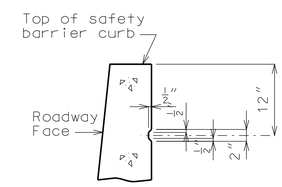

PART SECTION SHOWING RUSTICATION DETAILS

Notes:

Top of safety barrier curb shall be built parallel to grade with barrier curb joints (except at end bents) normal to grade.

All exposed edges of safety barrier curb shall have either a 1/2" radius or a 3/8" bevel, unless otherwise noted.

Payment for all concrete, Resin Anchor Systems and reinforcement, complete in place, will be considered completely covered by the contract unit price for safety barrier curb per linear foot.

Concrete in the safety barrier curb shall be Class B-1.

Measurement of safety barrier curb is to the nearest linear foot for each structure, measured along the outside top of slab from end of wing to end of wing.

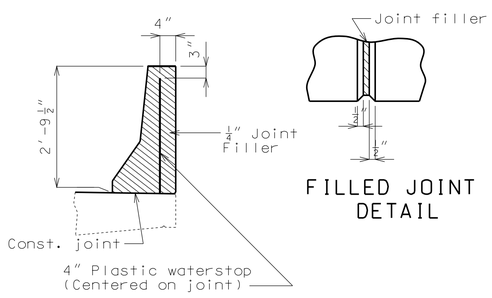

DETAILS OF PLASTIC WATERSTOP

FILLED JOINT DETAIL

Notes:

Plastic waterstop shall be placed in all safety barrier curb filled joints, except structures with superelevation, use on all lower safety barrier curb joints only.

Cost of plastic waterstop, complete in place, will be considered completely covered by the contract unit price for Safety Barrier Curb.

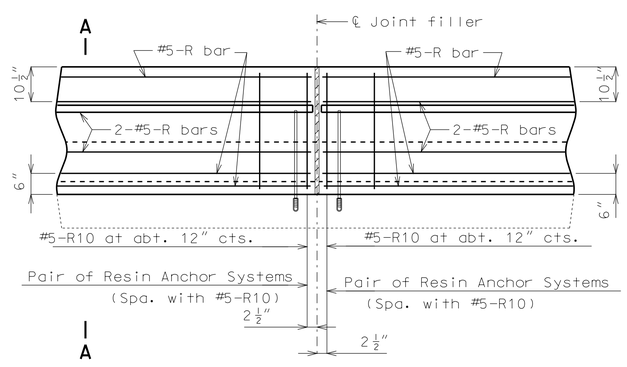

PART ELEVATION NEAR RIGHT SAFETY BARRIER CURB (CAST-IN-PLACE CONVENTIONAL FORMING OPTION)

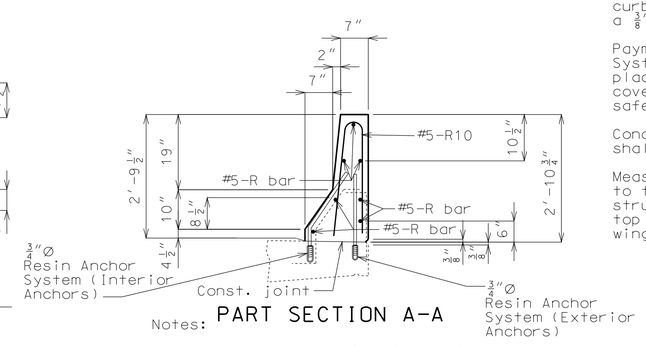

PART SECTION A-A

Notes:

Use a minimum lap of 2'-11" for #5 horizontal safety barrier curb bars.

The cross-sectional area above the slab = 2.49 sq. ft.

Existing R-bars into slab shall be used-in-place.

Detailed July 2013
Checked Aug. 2013

Note: This drawing is not to scale. Follow dimensions.

"THIS MEDIA SHOULD NOT BE CONSIDERED A CERTIFIED DOCUMENT."

DATE PREPARED	12/12/2013
ROUTE	I-70
STATE	MO
DISTRICT	BR
SHEET NO.	8
COUNTY	JACKSON
JOB NO.	J4P2191
CONTRACT ID.	
PROJECT NO.	
BRIDGE NO.	A03154

DESCRIPTION

DATE

MISSOURI HIGHWAYS AND TRANSPORTATION COMMISSION
105 WEST CAPITOL
JEFFERSON CITY, MO 65102
1-888-ASK-MODOT (1-888-275-6636)

IF A SEAL IS PRESENT ON THIS SHEET IT HAS BEEN ELECTRONICALLY SEALED AND DATED.

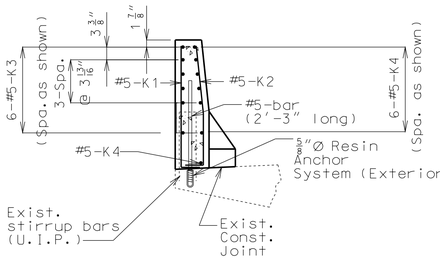

SECTION A-A

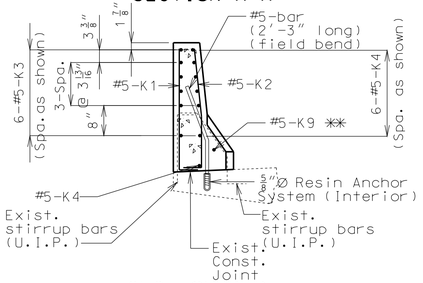

SECTION B-B

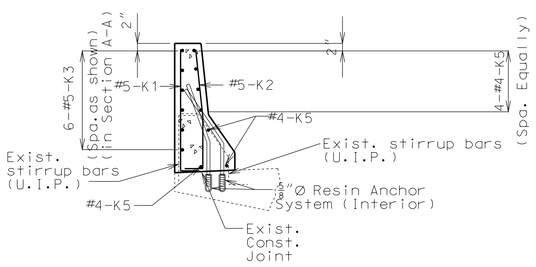

SECTION C-C

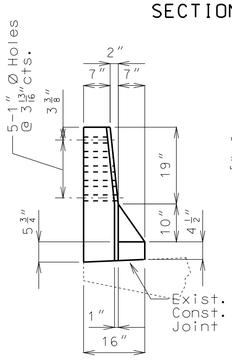

PART ELEVATION G-G

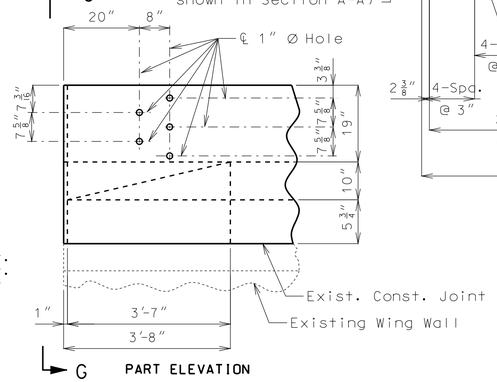

PART ELEVATION

1" Chamfer (Transition 1" chamfer to 0" chamfer at Type A Curb height for curb gutter lines to match)

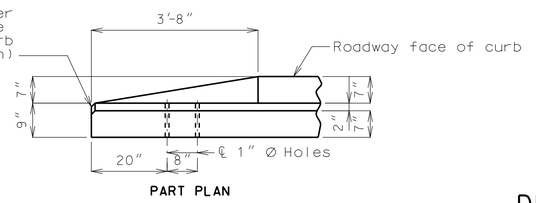

PART PLAN

DETAILS OF GUARDRAIL ATTACHMENT

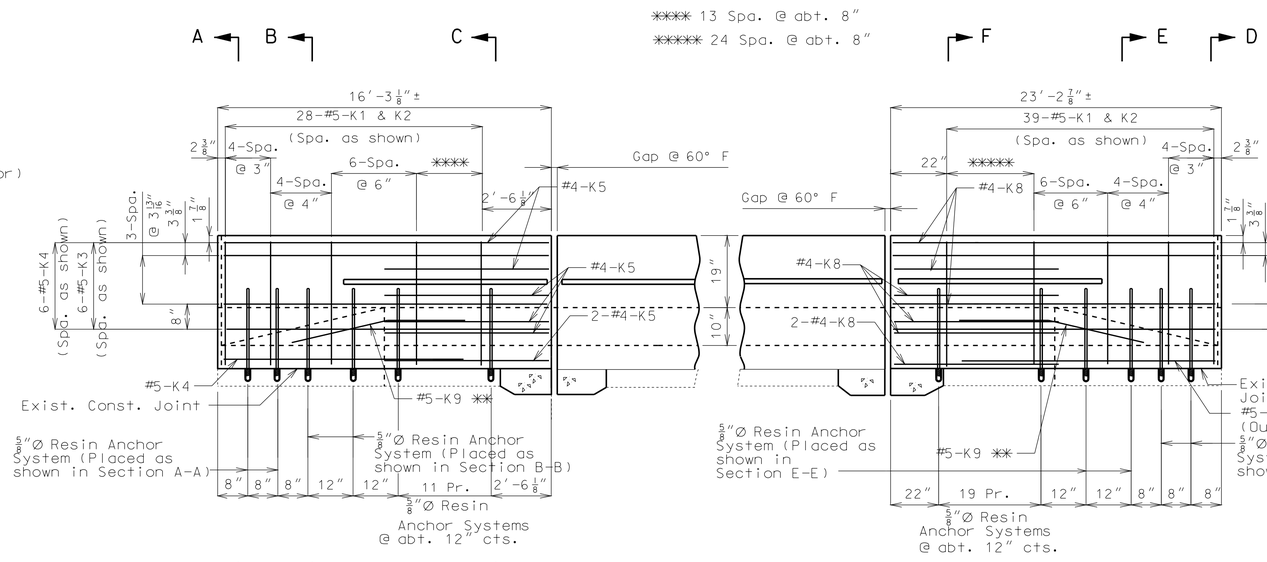

ELEVATION

ELEVATION

✱✱ Fit bar to follow transition face of curb.

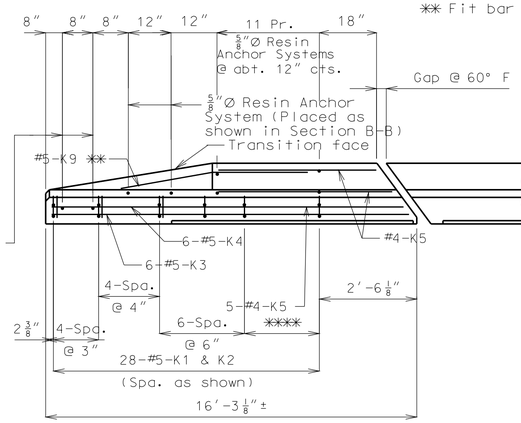

PLAN

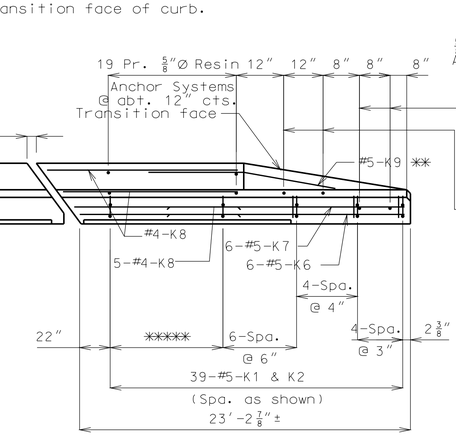

PLAN

R bars near expansion device not shown for clarity, see Sheets No. 7 & 8.

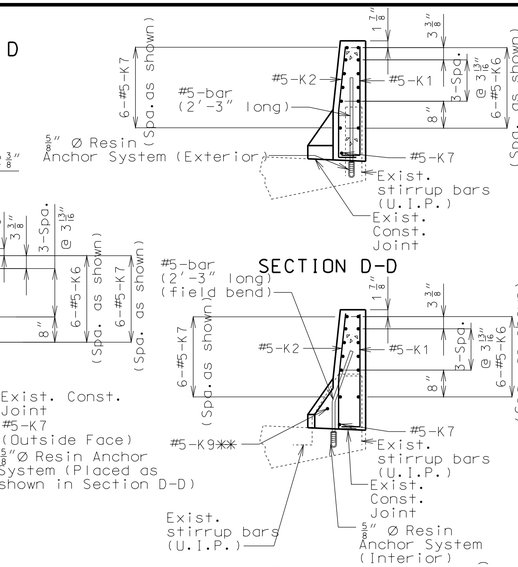

SECTION D-D

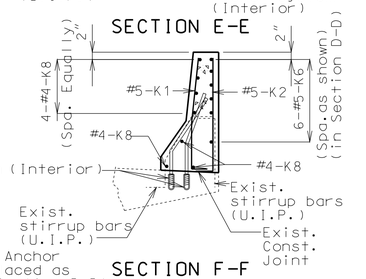

SECTION E-E

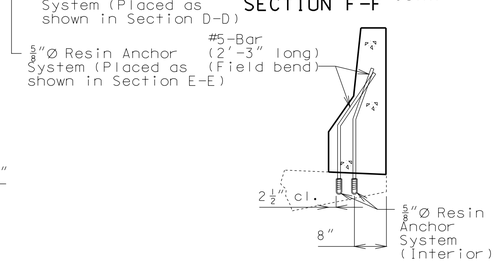

SECTION F-F

ANCHOR SYSTEMS AT SECTIONS C-C & F-F

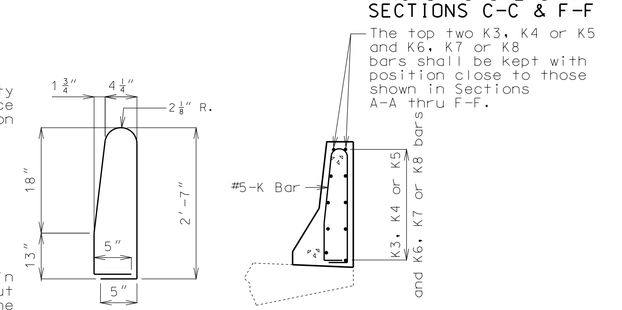

K1 & K2 BAR PERMISSIBLE ALTERNATE SHAPE (✱✱✱)

(✱✱✱) The K3, K4 or K5 and K6, K7 or K8 bar combinations may be furnished as one bar as shown, at the contractor's option.

Notes:

Use a minimum lap of 2'-0" between K4, K5, K7 and K8 bars.

Concrete traffic barrier delineators shall be placed on top of the safety barrier curb as shown on Missouri Standard Plans 617.10 and in accordance with Sec 617. Delineators on bridges shall have retroflective sheeting on the oncoming traffic side. Concrete traffic barrier delineators will be considered completely covered by the contract unit price for "Safety Barrier Curb."

The contractor shall use one of the qualified resin anchor systems in accordance with Sec 1039.

Cost of furnishing and installing the resin anchor system complete-in-place will be considered completely covered by the contract unit price for Safety Barrier Curb.

The minimum enbedment depth in concrete with f'c= 4,000 psi for the resin anchor system shall be that required to meet the minimum ultimate pullout strength in accordance with Sec 1039 but shall not be less than 5" at the interior anchors and 3 1/2" maximum at the exterior anchors.

An epoxy coated #5 Grade 60 reinforcing bar 2'-3" long shall be substituted for the 5/8"Ø threaded rod.

DETAILS OF RIGHT SAFETY BARRIER CURB AT END BENTS

(Existing 1 1/2" wearing surface not shown for clarity)

Detailed July 2013
Checked Aug. 2013

Note: This drawing is not to scale. Follow dimensions.

"THIS MEDIA SHOULD NOT BE CONSIDERED A CERTIFIED DOCUMENT."

DATE PREPARED	
12/12/2013	
ROUTE	STATE
I-70	MO
DISTRICT	SHEET NO.
BR	9
COUNTY	
JACKSON	
JOB NO.	
J4P2191	
CONTRACT ID.	
PROJECT NO.	
BRIDGE NO.	
A03154	

DATE	DESCRIPTION

MISSOURI HIGHWAYS AND TRANSPORTATION COMMISSION
105 WEST CAPITOL
JEFFERSON CITY, MO 65102
1-888-ASK-MODOT (1-888-275-6636)

IF A SEAL IS PRESENT ON THIS SHEET IT HAS BEEN ELECTRONICALLY SEALED AND DATED.

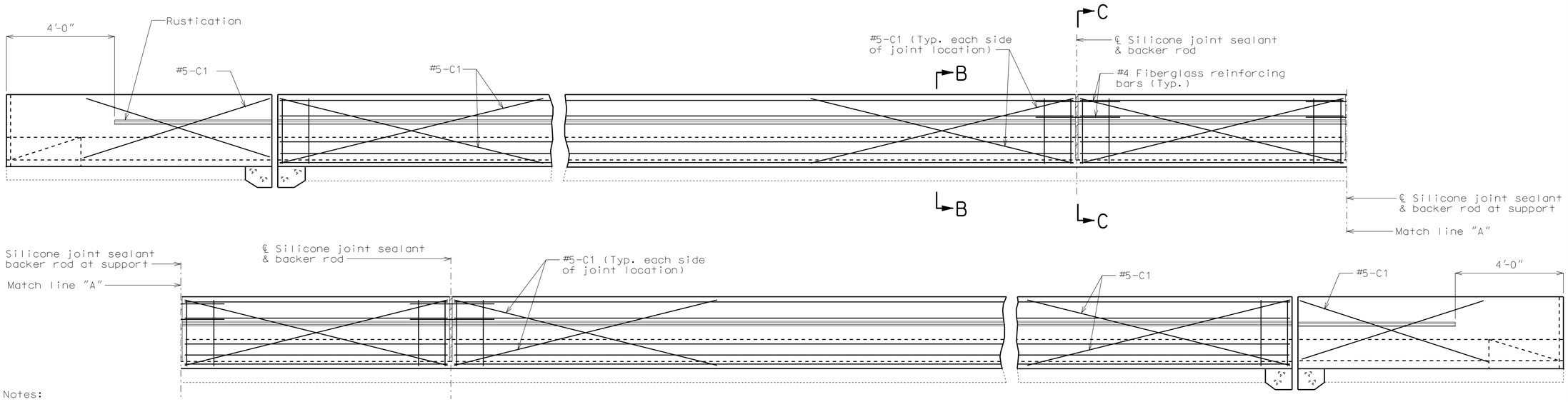

Notes:

Top of safety barrier curb shall be built parallel to grade with barrier curb joints (except at end bents) normal to grade.

Payment for all concrete, Resin Anchor Systems and reinforcement, complete in place, will be considered completely covered by the contract unit price for safety barrier curb per linear foot.

Concrete in the safety barrier curb shall be Class B-1.

Measurement of safety barrier curb is to the nearest linear foot for each structure, measured along the outside top of slab from end of wing to end of wing.

TYPICAL ELEVATION NEAR RIGHT SAFETY BARRIER CURB AT SUPPORT LOCATIONS (OPTIONAL SLIP-FORM BRIDGE SAFETY BARRIER CURB)

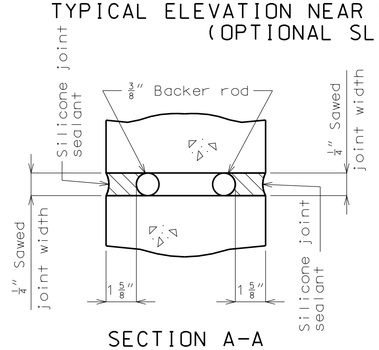

SECTION A-A

Notes:

Joint sealant and backer rods shall be used on all slip-form barrier curbs instead of joint filler and shall be in accordance with Sec 717 for silicone joint sealant for saw cut and formed joints.

Plastic waterstop shall not be used with slip-form option.

C Bars (Slip-form option only) shall be used in addition to cast-in-place conventional forming reinforcement for bridge safety barrier curb.

For Slip-Form option, all sides of the safety barrier curb shall have a vertically broomed finish and the curb top shall have a transversely broomed finish.

Concrete traffic barrier delineators shall be placed on top of the safety barrier curb as shown on Missouri Standard Plans 617.10 and in accordance with Sec 617. Delineators on bridges shall have retroreflective sheeting on the oncoming traffic side. Concrete traffic barrier delineators will be considered completely covered by the contract unit price for "Safety Barrier Curb".

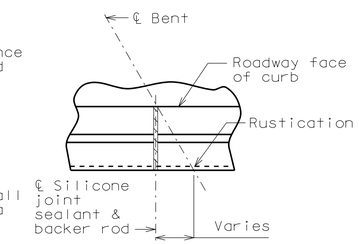

PART PLAN SHOWING SAFETY BARRIER CURB JOINT

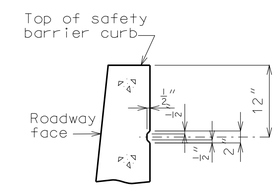

PART SECTION SHOWING RUSTICATION DETAILS

RUSTICATION DETAIL

Note:

Cost of silicone joint sealant and backer rod, complete in place, will be considered completely covered by the contract unit price for Safety Barrier Curb.

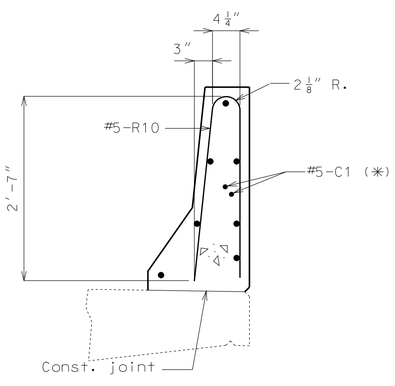

PART SECTION B-B

Notes:

(✳) Each side of joint location.

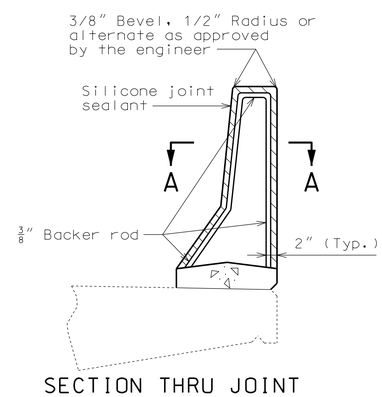

SECTION THRU JOINT

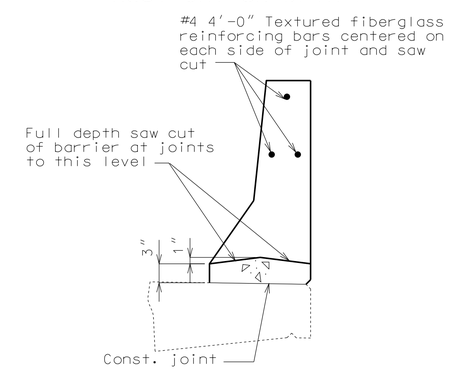

PART SECTION C-C

OPTIONAL SLIP-FORM BRIDGE RIGHT SAFETY BARRIER CURB

(Existing 1 1/2" wearing surface not shown for clarity)

Detailed July 2013
Checked Aug. 2013

Note: This drawing is not to scale. Follow dimensions.

"THIS MEDIA SHOULD NOT BE CONSIDERED A CERTIFIED DOCUMENT."

DATE PREPARED	
12/12/2013	
ROUTE	STATE
I-70	MO
DISTRICT	SHEET NO.
BR	10
COUNTY	
JACKSON	
JOB NO.	
J4P2191	
CONTRACT ID.	
PROJECT NO.	
BRIDGE NO.	
A03154	

DATE	DESCRIPTION

IF A SEAL IS PRESENT ON THIS SHEET IT HAS BEEN ELECTRONICALLY SEALED AND DATED.

MISSOURI HIGHWAYS AND TRANSPORTATION COMMISSION
105 WEST CAPITOL
JEFFERSON CITY, MO 65102
1-888-ASK-MODOT (1-888-275-6636)

BILL OF REINFORCING STEEL

NO. REQ'D.	MARK NO. SIZE	MARK NO. MARK	LOCATION	EPOXY (E)	SHAPE NO.	STIRRUP (S)	SUBSTR. (X)	VARIES (V)	NO. EACH	B FT. IN.	C FT. IN.	D FT. IN.	E FT. IN.	F FT. IN.	H FT. IN.	K FT. IN.	NOMINAL LENGTH FT. IN.	ACTUAL LENGTH FT. IN.	WEIGHT LBS.
			SLAB																
8	5	S1	SLAB	E	20					30 7.000							30 7	30 7	255
8	5	S2	SLAB	E	20					32 9.000							32 9	32 9	273
			BARRIER CURB																
67	5	K1	BARRIER CURB	E	19	S				2 7.000	5.125						3 0	2 11	204
67	5	K2	BARRIER CURB	E	14	S				5.125	12.625	18.000			2.000	17.875	3 0	2 10	198
8	5	K3	BARRIER CURB	E	20					16 0.000							16 0	16 0	134
7	5	K4	BARRIER CURB	E	20					5 7.000							5 7	5 7	41
9	4	K5	BARRIER CURB	E	20					11 7.000							11 7	11 7	70
6	5	K6	BARRIER CURB	E	20					22 11.000							22 11	22 11	143
7	5	K7	BARRIER CURB	E	20					5 7.000							5 7	5 7	41
7	4	K8	BARRIER CURB	E	20					20 5.000							20 5	20 5	95
2	5	K9	BARRIER CURB	E	8					2 2.125					2 2.000	2.375	4 4	4 4	9
8	5	R1	BARRIER CURB	E	26					2 7.000	4.250	2 7.125			2 7.000	3.000	5 4	5 4	45
8	5	R2	BARRIER CURB	E	26					2 7.000	4.750	2 7.125			2 7.000	3.375	5 4	5 4	45
8	5	R3	BARRIER CURB	E	26					2 7.000	5.250	2 7.250			2 7.000	3.750	5 4	5 4	45
8	5	R4	BARRIER CURB	E	27	S					6.000	11.250	8.875	12.000	9.250	6.375	3 2	3 0	25
8	5	R5	BARRIER CURB	E	19	S				18.125	6.000						2 0	0 23	16
8	5	R6	BARRIER CURB	E	27	S					6.750	11.625	8.875	12.000	9.250	7.125	3 3	3 1	26
8	5	R7	BARRIER CURB	E	19	S				18.125	6.750						2 1	2 0	17
8	5	R8	BARRIER CURB	E	27	S					7.500	12.125	8.875	12.000	9.250	7.875	3 5	3 3	27
8	5	R9	BARRIER CURB	E	19	S				18.125	7.500						2 2	2 0	17
181	5	R10	BARRIER CURB	E	26					2 7.000	4.250	2 7.125			2 7.000	3.000	5 4	5 4	1007
7	5	R11	BARRIER CURB	E	20					34 3.000							34 3	34 3	250
28	5	R12	BARRIER CURB	E	20					9 9.000							9 9	9 9	285
7	5	R13	BARRIER CURB	E	20					58 10.000							58 10	58 10	430
7	5	R14	BARRIER CURB	E	20					48 4.000							48 4	48 4	353
			SLIP FORM																
			OPTION																
24	5	C1	SLIP FORM	E	20					10 0.000							10 0	10 0	250
			TOTALS																
	4			E															165
	5			E															4136
			TOTAL																0
			TOTAL	E															4301
			Slab on																
			Girder																
	5			E															528
			TOTAL																528
			Safety																
			Barrier																
			Curb																

BILL OF REINFORCING STEEL

NO. REQ'D.	MARK NO. SIZE	MARK NO. MARK	LOCATION	EPOXY (E)	SHAPE NO.	STIRRUP (S)	SUBSTR. (X)	VARIES (V)	NO. EACH	B FT. IN.	C FT. IN.	D FT. IN.	E FT. IN.	F FT. IN.	H FT. IN.	K FT. IN.	NOMINAL LENGTH FT. IN.	ACTUAL LENGTH FT. IN.	WEIGHT LBS.
	4			E															165
	5			E															3358
			TOTAL																3523
			Slip Form																
			Option																
	5			E															250
			TOTAL																250

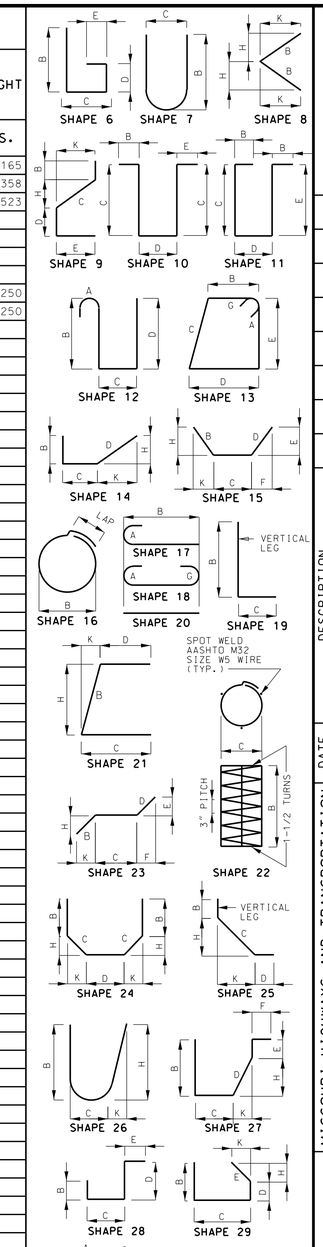

"THIS MEDIA SHOULD NOT BE CONSIDERED A CERTIFIED DOCUMENT."

DATE PREPARED	12/12/2013
ROUTE	I-70
STATE	MO
DISTRICT	BR
SHEET NO.	11
COUNTY	JACKSON
JOB NO.	J4P2191
CONTRACT ID.	
PROJECT NO.	
BRIDGE NO.	A03154

DESCRIPTION

DATE

IF A SEAL IS PRESENT ON THIS SHEET IT HAS BEEN ELECTRONICALLY SEALED AND DATED.

MISSOURI HIGHWAYS AND TRANSPORTATION COMMISSION

105 WEST CAPITOL
JEFFERSON CITY, MO 65102
1-888-ASK-MODOT (1-888-275-6636)

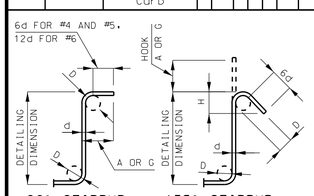

STIRRUP HOOK DIMENSIONS				
GRADES 40 - 50 - 60 KSI				
BAR SIZE	D (IN.)	90° HOOK	135° HOOK	
		HOOK A OR G	HOOK A OR G	APPROX. H
#4	2"	4 1/2"	4 1/2"	3"
#5	2 1/2"	6"	5 1/2"	3 3/4"
#6	4 1/2"	12"	8"	4 1/2"

NOTE: UNLESS OTHERWISE NOTED DIAMETER "D" IS THE SAME FOR ALL BENDS AND HOOKS ON A BAR.

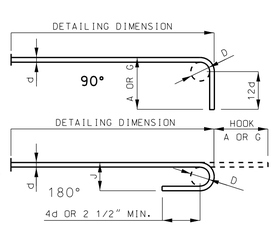

END HOOK DIMENSIONS				
BAR SIZE	D (IN.)	ALL GRADES		
		180° HOOKS		90° HOOKS
		A OR G	J	A OR G
#3	2 1/4"	5"	3"	6"
#4	3"	6"	4"	8"
#5	3 3/4"	7"	5"	10"
#6	4 1/2"	8"	6"	12"
#7	5 1/4"	10"	7"	14"
#8	6"	11"	8"	16"
#9	9 1/2"	15"	11 3/4"	19"
#10	10 3/4"	17"	13 1/4"	22"
#11	12"	19"	14 3/4"	2'-0"
#14	18 1/4"	2'-3"	21 3/4"	2'-7"

TWO ADDITIONAL #4-K5 & #5-K3 ARE INCLUDED IN THE BAR BILL FOR TESTING.

NOTE:
ALL STANDARD HOOKS AND BENDS OTHER THAN 180 DEGREE ARE TO BE BENT WITH SAME PROCEDURE AS FOR 90 DEGREE STANDARD HOOKS.
HOOKS AND BENDS SHALL BE IN ACCORDANCE WITH THE PROCEDURES AS SHOWN ON THIS SHEET.
E = EPOXY COATED REINFORCEMENT.
S = STIRRUP.
X = BAR IS INCLUDED IN SUBSTRUCTURE QUANTITIES.
V = BAR DIMENSIONS VARY IN EQUAL INCREMENTS BETWEEN DIMENSIONS SHOWN ON THIS LINE AND THE FOLLOWING LINE.
NO. EA. = NUMBER OF BARS OF EACH LENGTH.
NOMINAL LENGTHS ARE BASED ON OUT TO OUT DIMENSIONS SHOWN IN BENDING DIAGRAMS AND ARE LISTED FOR FABRICATORS USE. (NEAREST INCH)
ACTUAL LENGTHS ARE MEASURED ALONG CENTERLINE BAR TO THE NEAREST INCH.
PAYWEIGHTS ARE BASED ON ACTUAL LENGTHS.
FOUR ANGLE OR CHANNEL SPACERS ARE REQUIRED FOR EACH COLUMN SPIRAL. SPACERS ARE TO BE PLACED ON INSIDE OF SPIRALS. LENGTH AND WEIGHT OF COLUMN SPIRALS DO NOT INCLUDE SPLICES OR SPACERS.
REINFORCING STEEL (GRADE 60) FY = 60,000 PSI.

Detailed Nov. 2013
Checked Nov. 2013

Note: This drawing is not to scale. Follow dimensions.

MISSOURI HIGHWAYS AND TRANSPORTATION COMMISSION

SEC/SUR 29 TWP 48N RGE 31W

U.I.P. AND REHABILITATE EXISTING (68'-131'-66') CONTINUOUS COMPOSITE PLATE GIRDER SPANS (60° R.A.)

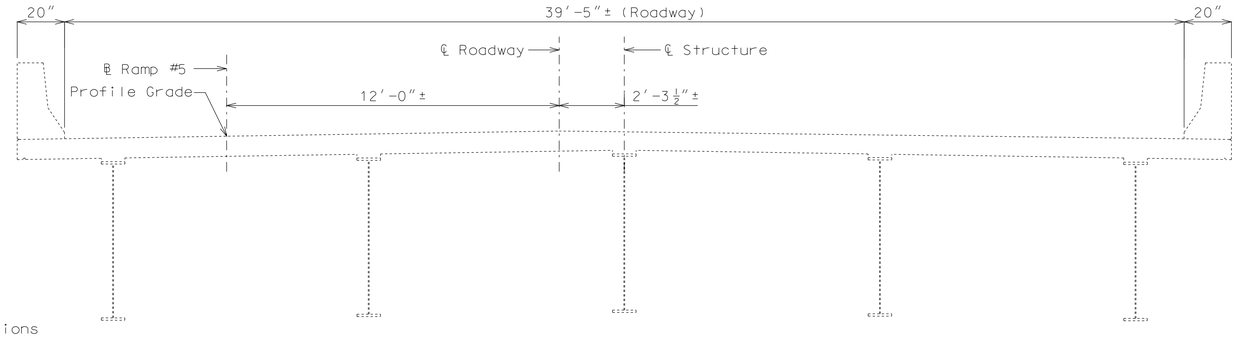

TYPICAL SECTION THRU SLAB

GENERAL NOTES:

Design Specifications:

2002 - AASHTO LFD (17th Edition) Standard Specifications
Bridge Deck Rating = 7

Design Loading:

HS20-44 (1973 & New Construction)
Military 24,000# Tandem Axle

Design Unit Stresses:

Class B-1 Concrete (Slab & Safety Barrier Curb) f'c = 4,000 psi

Reinforcing Steel (Grade 60) fy = 60,000

Joint Filler:

All joint filler shall be in accordance with Sec 1057 for preformed sponge rubber expansion and partition joint filler, except as noted.

Reinforcing Steel:

Minimum clearance to reinforcing steel shall be 1½", unless otherwise shown.

Expansion joints:

The concrete for slab and barrier curb replacement shall be Class B-1.

Payment for backwall and slab concrete, complete-in-place, for expansion joint replacement will be considered completely covered by the contract unit price for Class B-1 concrete per cu. yard.

Payment for furnishing and installing slab and backwall reinforcing steel, complete-in-place, for expansion joint replacement will be considered completely covered by the contract unit price for Reinforcing Steel (Epoxy Coated).

Protective Coatings:

Protective coating for concrete bents and piers (Epoxy & Urethane) shall be applied as shown on the bridge plans and in accordance with Sec 711.

Structural Steel Protective Coatings:

Protective Coating: System G in accordance with Sec 1081

Protective Coating Limits: Surfaces of all existing structural steel located within 10 feet of end of girders at End Bent No. 4 shall be recoated. Within this limit, items to be recoated shall include all surfaces of girders, diaphragms, stiffeners, bearings, and miscellaneous structural steel.

Surface Preparation: Surface preparation of the existing steel shall be in accordance with Sec 1081 for "Recoating of Structural Steel (System G, H or I)". The cost of surface preparation will be considered completely covered by the contract unit price per sq. foot for "Surface Preparation for Recoating Structural Steel".

Prime Coat: The cost of the prime coat will be considered completely covered by the contract unit price per sq. foot for "Field Application of Inorganic Zinc Primer". Tint of the prime coat for System G shall be similar to the color of the field coat to be used.

Field Coat: The color of the finish field coat shall be Gray (Federal Standard #26373). The cost of the intermediate field coat will be considered completely covered by the contract unit price per sq. foot for "Intermediate Field Coat (System G)". The cost of the finish field coat will be considered completely covered by the contract unit price per sq. foot for "Finish Field Coat (System G)".

Sec 1081.4.5 shall be modified such that the word "RECOATED" is replaced by the words "RECOATED - SYSTEM G - EXPANSION AREAS ONLY" as part of the new legend.

Miscellaneous:

Bars bonded in old concrete not removed shall be cleanly stripped and embedded into new concrete where possible. If length is available, old bars shall extend into new concrete at least 40 diameters for smooth bars and 30 diameters for deformed bars, unless otherwise noted.

Outline of old work is indicated by light dashed lines. Heavy lines indicate new work.

Contractor shall verify all dimensions in field before ordering new material.

The area exposed by the removal of concrete and not covered with new concrete shall be coated with an approved qualified special mortar in accordance with Sec 704.

Traffic Handling:

See Sheet No. 2 for Details of Stage Construction and Roadway Plans for Traffic Control.

Estimated Quantities

Item		Total
Removal of Existing Expansion Joints & Adjacent Concrete	linear foot	79
Remove and Replace Barrier Curb	linear foot	13
Class B-1 Concrete	cu. yard	9.8
Substructure Repair (Formed)	sq. foot	40
Substructure Repair (Unformed)	sq. foot	6
Reinforcing Steel (Epoxy Coated)	pound	600
Protective Coating - Concrete Bents & Piers (Epoxy)	lump sum	1
Protective Coating - Concrete Bents & Piers (Urethane)	lump sum	1
Expansion Device (Flat Plate)	linear foot	79
Surface Preparation for Recoating Structural Steel	sq. foot	700
Field Application of Inorganic Primer	sq. foot	700
Intermediate Field Coat (System G)	sq. foot	700
Finish Field Coat (System G)	sq. foot	700

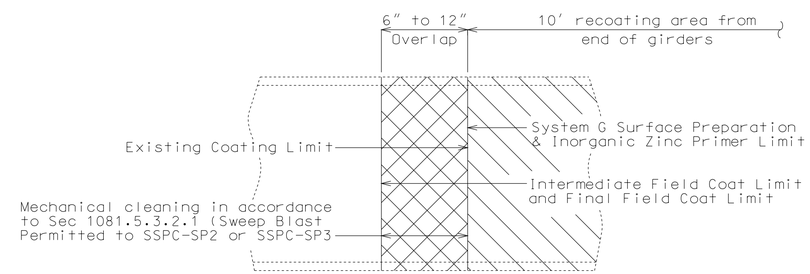

PART ELEVATION SHOWING LIMITS OF PAINT OVERLAP

(Vertical or horizontal paint limit. Horizontal limit shown)

Note:

Limits of Paint Overlap: System G shall overlap the existing coating between 6 inches and 12 inches in order to achieve maximum coverage at the paint limit of each complete system near the expansion and contraction areas. The final field coating shall be masked to provide crisp, straight lines and to prevent overspray beyond the overlap required.

REPAIRS TO BRIDGE: RTE. 291 SB OVER I-470 NB

STATE ROAD FROM I-470 SOUTH TO RTE. 50

AT I-470 - RTE. 291 INTERCHANGE

STA. 9+24.58± (MATCH EXISTING)

STD. 617.20

STD. 706.35

"THIS MEDIA SHOULD NOT BE CONSIDERED A CERTIFIED DOCUMENT."

DATE PREPARED 10/8/2013

ROUTE 291 | STATE MO

DISTRICT BR | SHEET NO. 1

COUNTY JACKSON

JOB NO. J4P2191

CONTRACT ID.

PROJECT NO.

BRIDGE NO. A21201

DESCRIPTION

DATE

MISSOURI HIGHWAYS AND TRANSPORTATION COMMISSION

105 WEST CAPITOL
JEFFERSON CITY, MO 65102
1-888-ASK-MODOT (1-888-275-6636)

IF A SEAL IS PRESENT ON THIS SHEET IT HAS BEEN ELECTRONICALLY SEALED AND DATED.

Detailed July 2013
Checked Aug. 2013

Note: This drawing is not to scale. Follow dimensions.

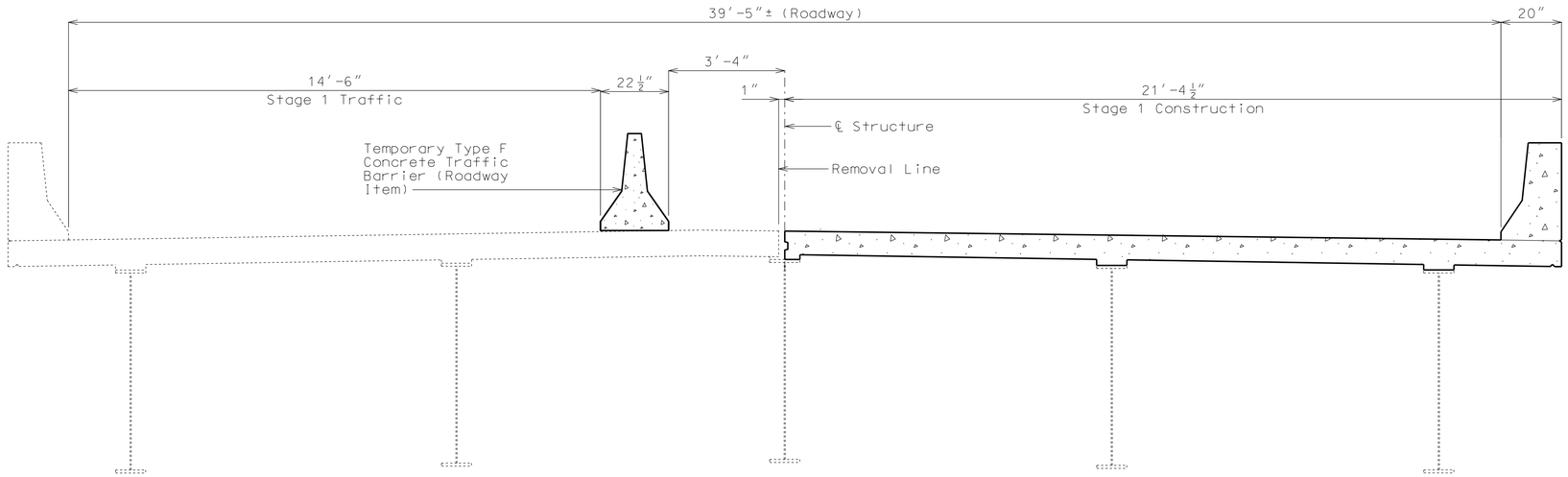

STAGE 1 CONSTRUCTION

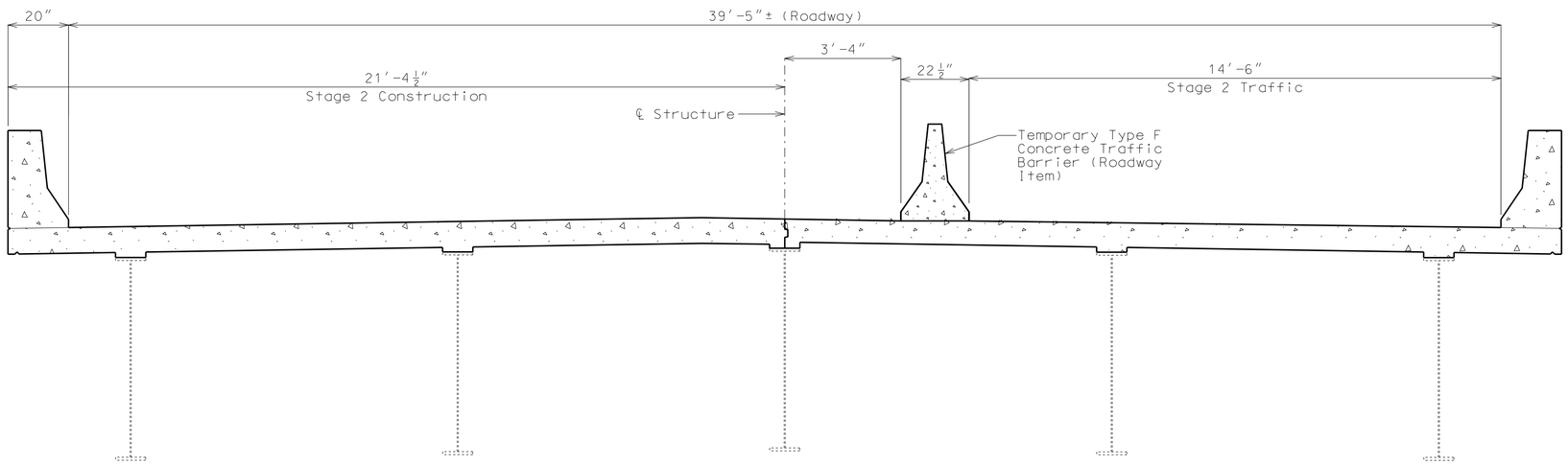

STAGE 2 CONSTRUCTION

Note:

Temporary Barrier shall not be attached to bridge.

DETAILS OF STAGE CONSTRUCTION FOR JOINT REPLACEMENT

Detailed July 2013
Checked Aug. 2013

Note: This drawing is not to scale. Follow dimensions.

"THIS MEDIA SHOULD NOT BE CONSIDERED A CERTIFIED DOCUMENT."

DATE PREPARED	10/8/2013
ROUTE	291
STATE	MO
DISTRICT	BR
SHEET NO.	2
COUNTY	JACKSON
JOB NO.	J4P2191
CONTRACT ID.	
PROJECT NO.	
BRIDGE NO.	A21201

DATE	DESCRIPTION

MISSOURI HIGHWAYS AND TRANSPORTATION COMMISSION

105 WEST CAPITOL
JEFFERSON CITY, MO 65102
1-888-ASK-MODOT (1-888-275-6636)

IF A SEAL IS PRESENT ON THIS SHEET IT HAS BEEN ELECTRONICALLY SEALED AND DATED.

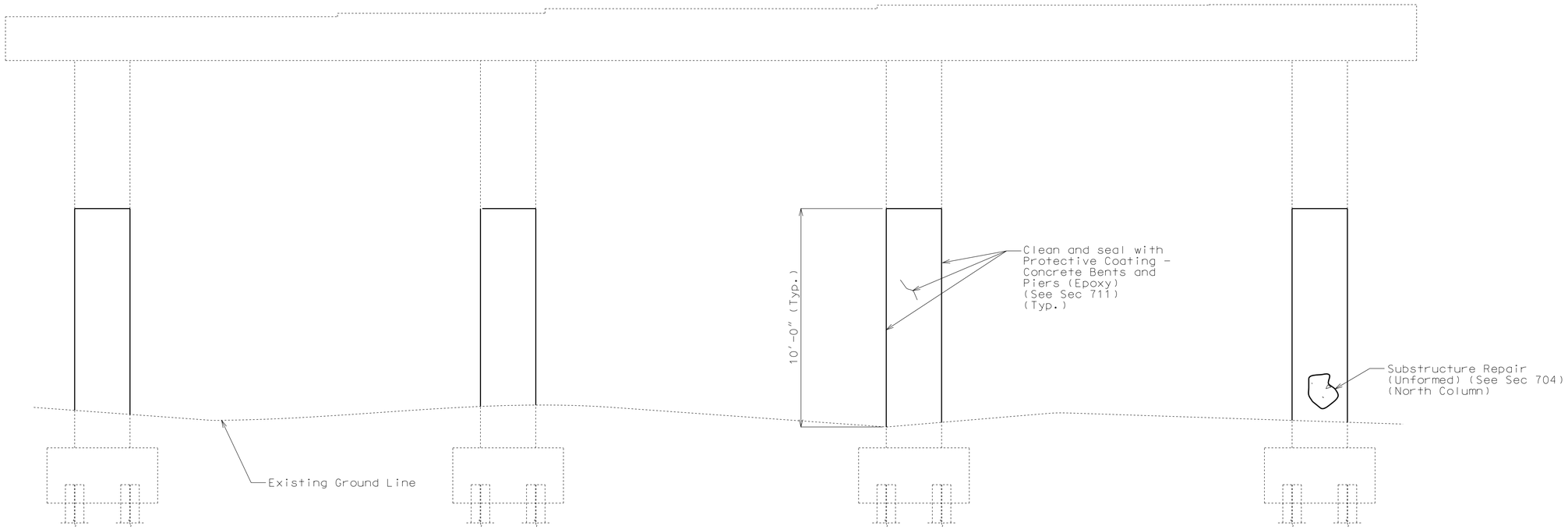

TYPICAL ELEVATION OF INTERMEDIATE BENT NO. 3
SHOWING SUBSTRUCTURE REPAIR AND PROTECTIVE COATING

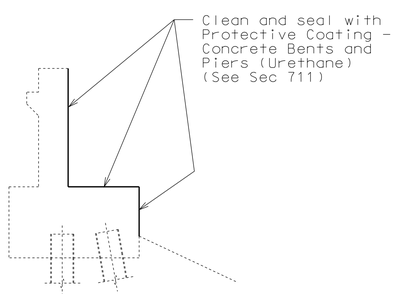

TYPICAL SECTION THRU
END BENTS NO 1 & 4 SHOWING
PROTECTIVE COATING

(End Bent No. 1 shown, End Bent No. 4 similar)

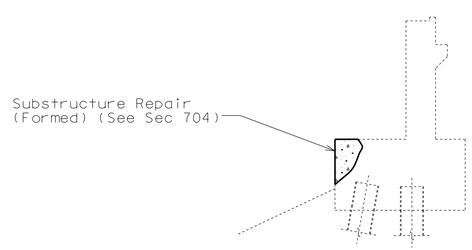

TYPICAL SECTION THRU
END BENT NO. 4 SHOWING
SUBSTRUCTURE REPAIR

Detailed July 2013
Checked Aug. 2013

Note: This drawing is not to scale. Follow dimensions.

"THIS MEDIA SHOULD NOT BE CONSIDERED A CERTIFIED DOCUMENT."

DATE PREPARED	10/8/2013
ROUTE	291
STATE	MO
DISTRICT	BR
SHEET NO.	3
COUNTY	JACKSON
JOB NO.	J4P2191
CONTRACT ID.	
PROJECT NO.	
BRIDGE NO.	A21201

DATE	DESCRIPTION

MISSOURI HIGHWAYS AND TRANSPORTATION COMMISSION

105 WEST CAPITOL
JEFFERSON CITY, MO 65102
1-888-ASK-MODOT (1-888-275-6636)

IF A SEAL IS PRESENT ON THIS SHEET IT HAS BEEN ELECTRONICALLY SEALED AND DATED.

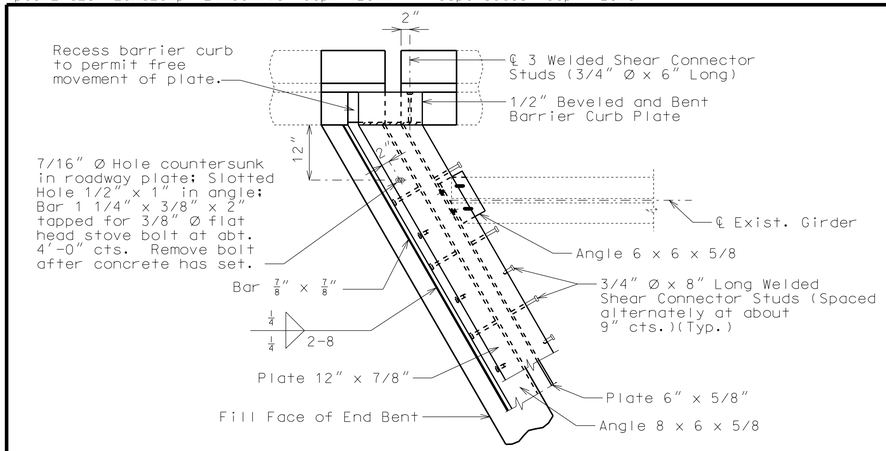

PART PLAN

Note: Concrete Vent Holes not shown for clarity.

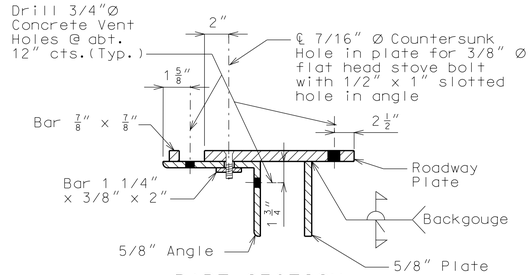

PART SECTION (TYPICAL)

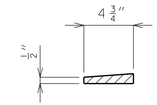

TYPICAL BEVEL PLATE

GENERAL NOTES:

Expansion device shall be fabricated in one section, except for stage construction and when the length is over 50 feet. A complete joint penetration groove weld splice shall be required. Welds shall be ground flush to provide a smooth surface. The expansion device shall be fabricated and installed to the crown and grade of the roadway.

Plan dimensions are based on installation at 60°F. The expansion gap and other dimensions shall be increased or decreased 3/16" for each 10° fall or rise in temperature at installation.

Material for the expansion device shall be ASTM A709 Grade 36 structural steel. Anchors for the expansion device shall be in accordance with Sec 1037.

Structural steel for the expansion device and curb plate shall be coated with a minimum of two coats of inorganic zinc primer (5 mils minimum) or galvanized in accordance with ASTM A123. Anchors need not be protected from overspray.

Payment for furnishing, coating or galvanizing and installing the structural steel for the expansion device will be considered completely covered by the contract unit price for Expansion Device (Flat Plate) per linear foot.

Concrete shall be forced under and around flat plate, anchors and angles. Proper consolidation shall be achieved by localized internal vibration. Finishing of the concrete shall be achieved by hand finishing within one foot of the expansion device. The vertical and horizontal concrete vent holes shall be offset from each other. Do not alternate holes at the 12" spacing.

Longitudinal reinforcing steel shall be placed or cut/bent so that ends shall not be more than ±1" from vertical plate and the vertical leg of the angle at the expansion device.

Complete joint penetration welds utilized in the fabrication of the expansion device shall be nondestructively tested by an approved method.

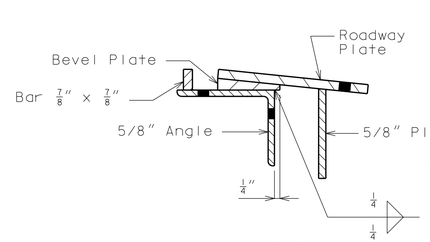

PART SECTION THRU BEVEL PLATE

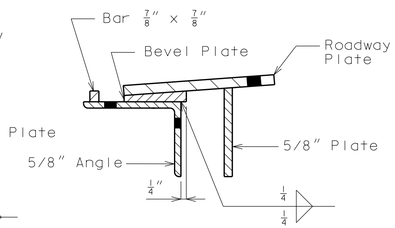

PART SECTION THRU BEVEL PLATE

Note: Bevel plates shall be used at end bents when the grade of the slab at expansion device is 3% or more.

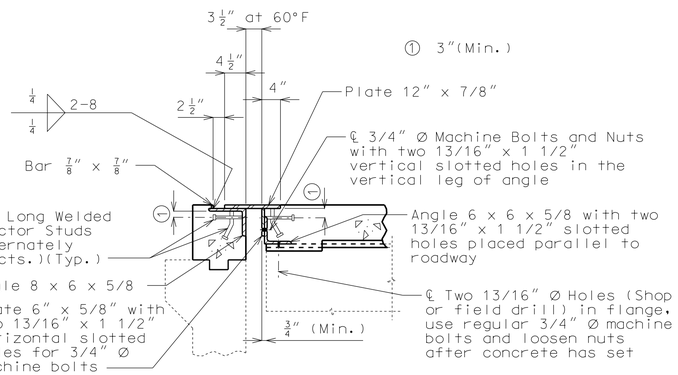

PART SECTION AT END BENT

(Note: Reinofrcement not shown for clarity.)

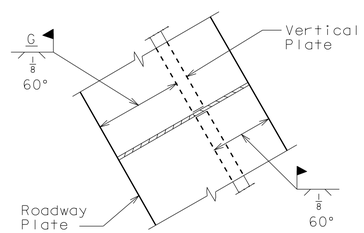

PART PLAN ROADWAY PLATE AND VERTICAL PLATE

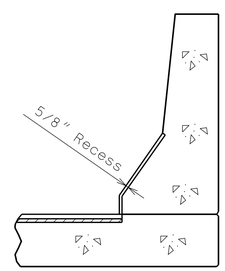

PART SECTION B-B

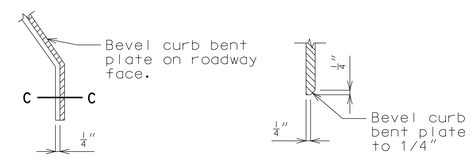

PART ELEVATION AT END OF BEVELED CURB BENT PLATE

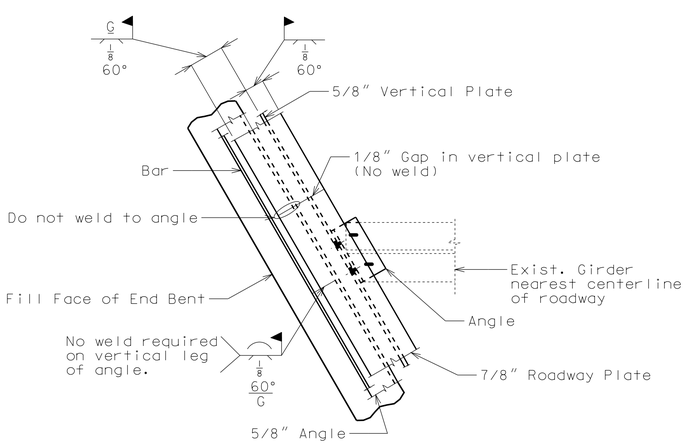

PERMISSIBLE FIELD SPLICE AT END BENT

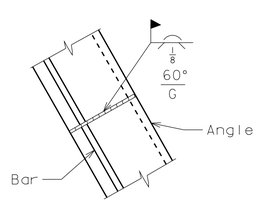

PART PLAN OF ANGLE AND BAR

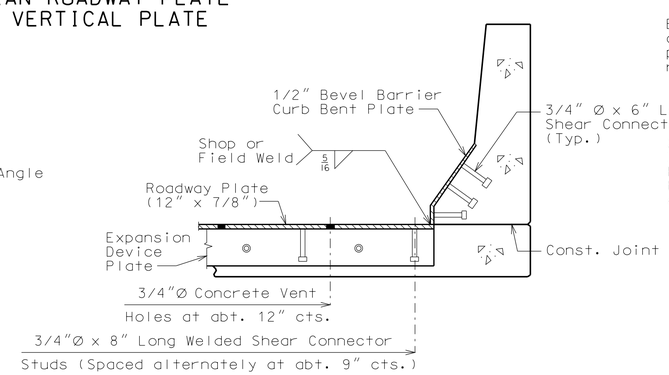

PART SECTION A-A

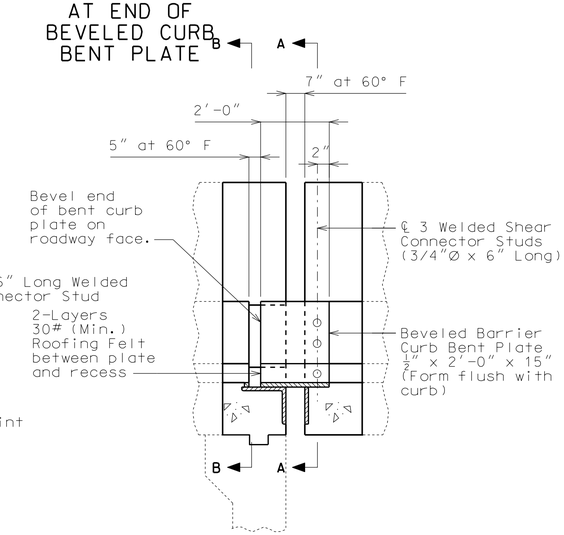

ELEVATION OF BARRIER CURB

DETAILS OF FLAT PLATE EXPANSION DEVICE AT END BENT NO. 4

Detailed July 2013
Checked Aug. 2013

Note: This drawing is not to scale. Follow dimensions.

"THIS MEDIA SHOULD NOT BE CONSIDERED A CERTIFIED DOCUMENT."

DATE PREPARED	
10/8/2013	
ROUTE	STATE
291	MO
DISTRICT	SHEET NO.
BR	4
COUNTY	
JACKSON	
JOB NO.	
J4P2191	
CONTRACT ID.	
PROJECT NO.	
BRIDGE NO.	
A21201	

DATE	DESCRIPTION

MISSOURI HIGHWAYS AND TRANSPORTATION COMMISSION
105 WEST CAPITOL
JEFFERSON CITY, MO 65102
1-888-ASK-MODOT (1-888-275-6636)

IF A SEAL IS PRESENT ON THIS SHEET IT HAS BEEN ELECTRONICALLY SEALED AND DATED.

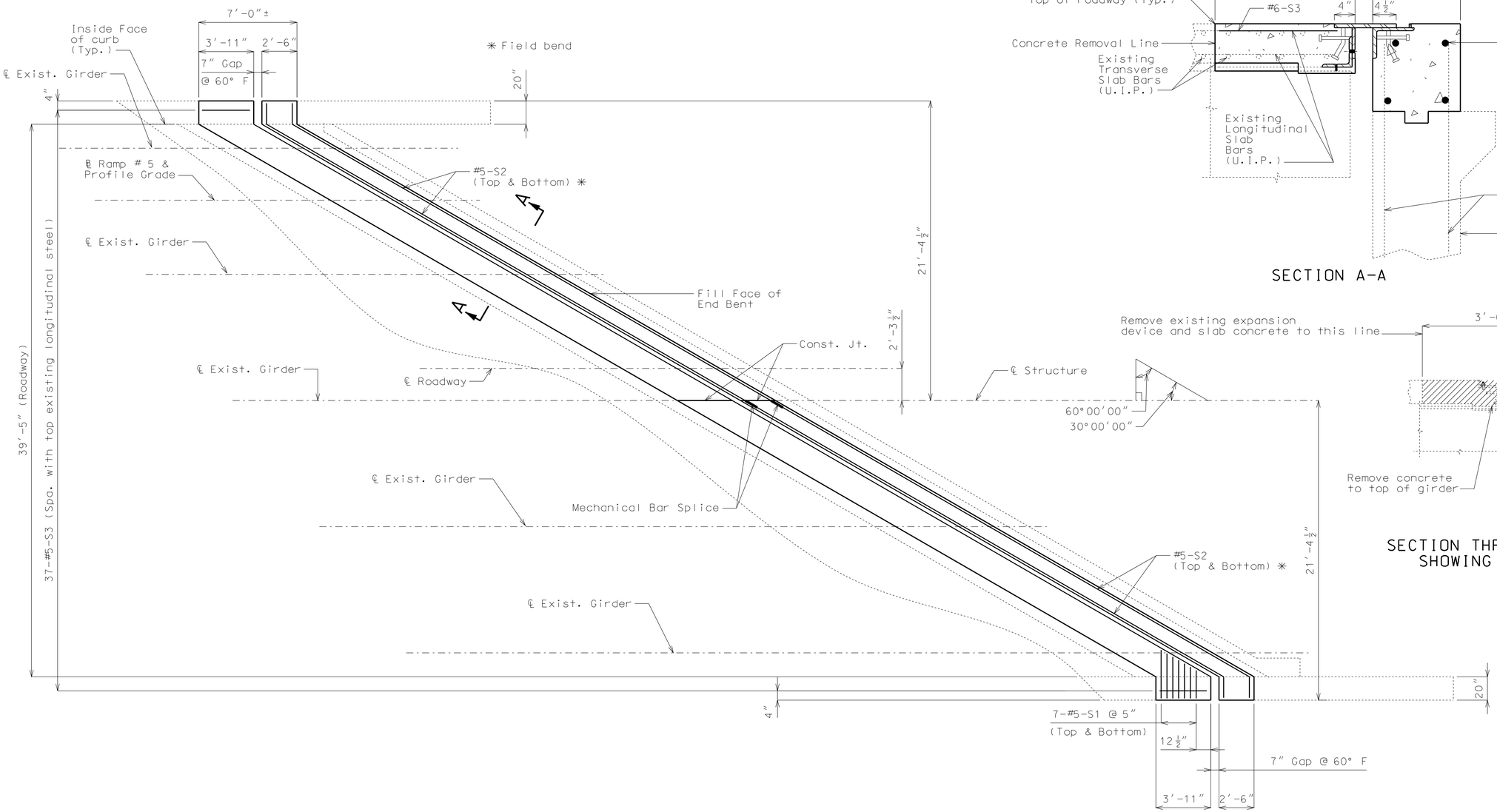

PART PLAN OF SLAB @
END BENT NO. 4
SHOWING REINFORCEMENT

Note: Existing reinforcment (U.I.P.) not shown for clarity.

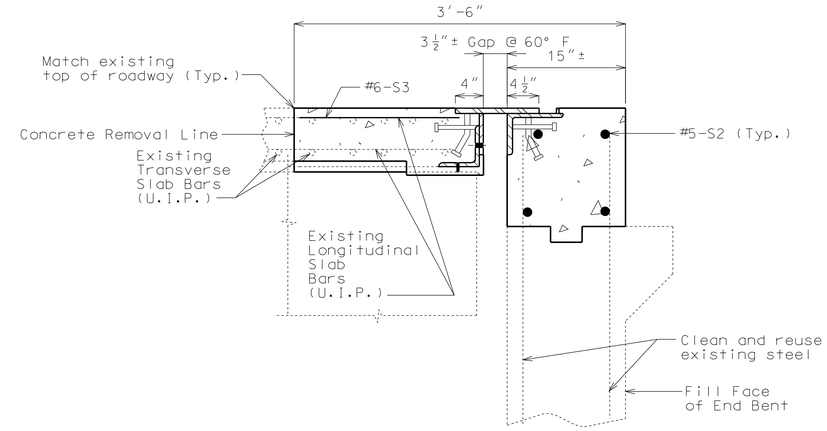

SECTION A-A

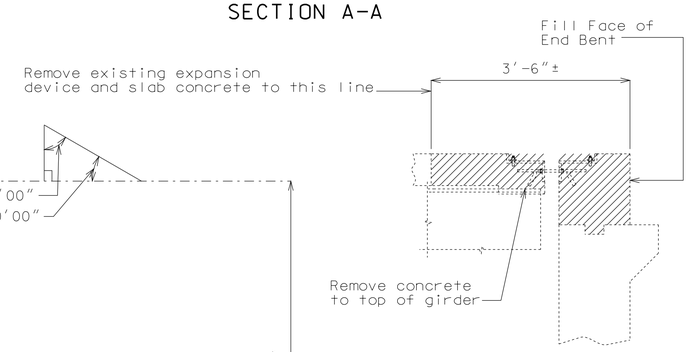

SECTION THRU END BENT
SHOWING REMOVAL

Notes:

For details of expansion device not shown, see Sheet No. 4.

Shift #5-S1 bars where necessary to clear shear connector studs on the expansion device.

The contractor shall use a mechanical bar splice for #5-S2 bars at the location required for stage construction in accordance with the traffic control plans. The total bar lengths for bars indicated in the bill of reinforcing steel are determined based on bars located flush to the face of the construction joint. Actual bar lengths shall be determined in the field with bars being field cut to the lengths needed.

No additional payment will be made for any additional bar lengths required for the mechanical bar splices. Mechanical bar splices shall be in accordance with Sec 706 except that no measurement will be made for mechanical bar splice and will be considered completely covered by the contract unit price for reinforcing steel.

DETAILS OF JOINT REPLACEMENT AND PART PLAN OF SLAB AT END BENT NO. 4

Detailed July 2013
Checked Aug. 2013

Note: This drawing is not to scale. Follow dimensions.

"THIS MEDIA SHOULD NOT BE CONSIDERED A CERTIFIED DOCUMENT."

DATE PREPARED	10/8/2013
ROUTE	291
STATE	MO
DISTRICT	BR
SHEET NO.	5
COUNTY	JACKSON
JOB NO.	J4P2191
CONTRACT ID.	
PROJECT NO.	
BRIDGE NO.	A21201

DATE	DESCRIPTION

MISSOURI HIGHWAYS AND TRANSPORTATION COMMISSION
105 WEST CAPITOL
JEFFERSON CITY, MO 65102
1-888-ASK-MODOT (1-888-275-6636)

IF A SEAL IS PRESENT ON THIS SHEET IT HAS BEEN ELECTRONICALLY SEALED AND DATED.

Notes:

Remove existing stirrups within limits of Safety Barrier Curb Removal.

Top of safety barrier curb shall be built parallel to grade.

All exposed edges of safety barrier curb shall have either a $\frac{1}{2}''$ radius or a $\frac{3}{8}''$ bevel, unless otherwise noted.

Concrete in the safety barrier curb replacement shall be Class B-1.

All exposed edges of new safety barrier curb shall match existing safety barrier curb.

Payment for all curb concrete and reinforcing steel, complete-in-place, will be considered completely covered by the contract unit price for Remove and Replace Barrier Curb.

All existing longitudinal reinforcement in the safety barrier curb shall be cleaned and reused.

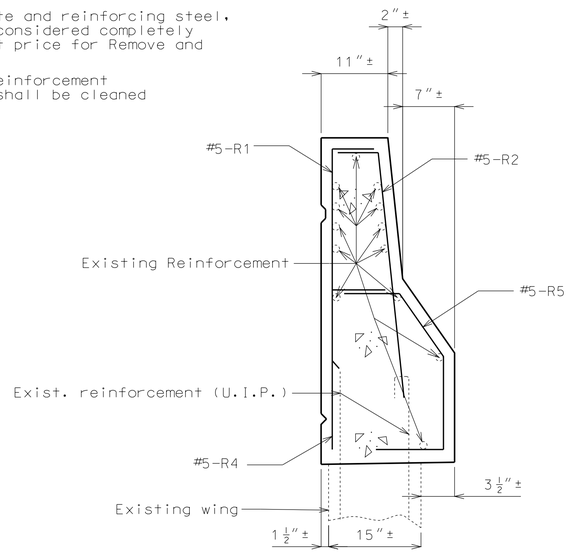

PART SECTION A-A

Note: Place transverse R-bars parallel to open joint.

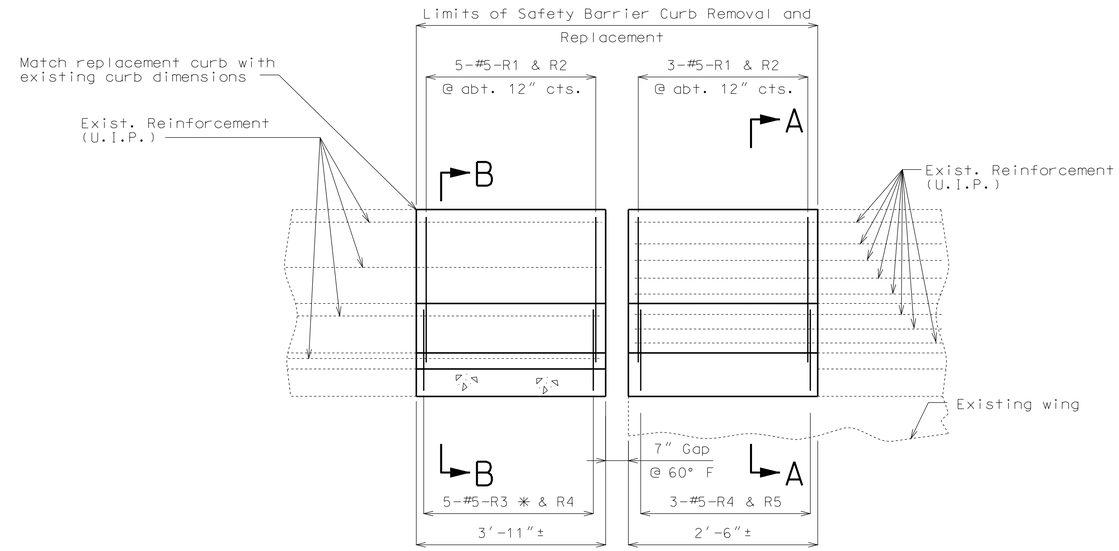

PART ELEVATION SHOWING BARRIER CURB REINFORCEMENT

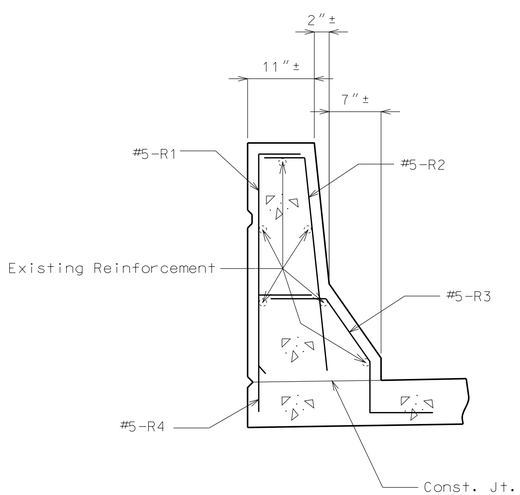

PART SECTION B-B

Note: Place transverse R-bars parallel to open joint.

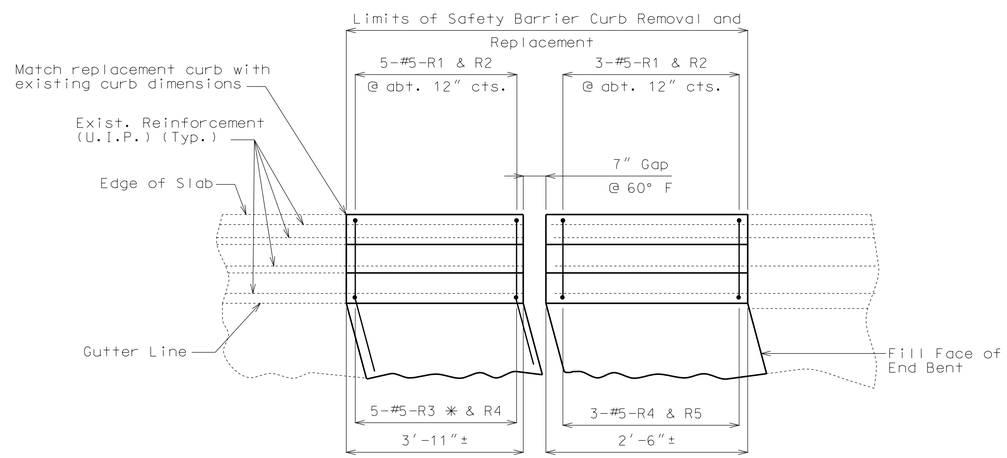

PART PLAN SHOWING BARRIER CURB REINFORCEMENT

✳ Field bend #5-R3

Detailed July 2013
Checked Aug. 2013

Note: This drawing is not to scale. Follow dimensions.

"THIS MEDIA SHOULD NOT BE CONSIDERED A CERTIFIED DOCUMENT."

DATE PREPARED	
10/8/2013	
ROUTE 291	STATE MO
DISTRICT BR	SHEET NO. 6
COUNTY JACKSON	
JOB NO. J4P2191	
CONTRACT ID.	
PROJECT NO.	
BRIDGE NO. A21201	

DATE	DESCRIPTION

MISSOURI HIGHWAYS AND TRANSPORTATION COMMISSION

105 WEST CAPITOL
JEFFERSON CITY, MO 65102
1-888-ASK-MODOT (1-888-275-6636)

IF A SEAL IS PRESENT ON THIS SHEET IT HAS BEEN ELECTRONICALLY SEALED AND DATED.

BILL OF REINFORCING STEEL

NO. REQ'D.	MARK NO. SIZE	MARK NO. MARK	LOCATION	EPOXY (E)	SHAPE NO.	STIRRUP (S)	SUBSTR. (X)	VARIES (V)	NO. EACH	B FT.	B IN.	C FT.	C IN.	D FT.	D IN.	E FT.	E IN.	F FT.	F IN.	H FT.	H IN.	K FT.	K IN.	NOMINAL LENGTH FT.	NOMINAL LENGTH IN.	ACTUAL LENGTH FT.	ACTUAL LENGTH IN.	WEIGHT LBS.
			SLAB																									
14	5	S1	SLAB	E	20			V	2	2	0.000													2	0	2	0	
			INCREMENT =							3	5.000													3	5	3	5	40
			2.875 INCH																									
10	5	S2	SLAB	E	20					40	11.000													40	11	40	11	427
37	5	S3	SLAB	E	20					3	5.000													3	5	3	5	132
			BARRIER CURB																									
16	5	R1	BARRIER CURB	E	19	S				2	6.000	6.000												3	0	2	11	49
16	5	R2	BARRIER CURB	E	15	S				2	6.125	6.000								2	6.000	3.000		3	0	2	11	49
10	5	R3	BARRIER CURB	E	27	S						9.000		11.125		7.000		12.000		9.125		6.375		3	3	3	1	32
16	5	R4	BARRIER CURB	E	19	S					17.000	9.000												2	2	2	1	35
6	5	R5	BARRIER CURB	E	27	S					12.000	7.000		11.125		9.000				6.375		9.125		3	3	3	1	19
			TOTALS																									
	5			E																								783
			TOTAL																									0
			TOTAL	E																								783
			Slab on																									
			Girder																									
	5			E																								599
			TOTAL																									599
			Safety																									
			Barrier																									
			Curb																									
	5			E																								184
			TOTAL																									184

BILL OF REINFORCING STEEL

NO. REQ'D.	MARK NO. SIZE	MARK NO. MARK	LOCATION	EPOXY (E)	SHAPE NO.	STIRRUP (S)	SUBSTR. (X)	VARIES (V)	NO. EACH	B FT.	B IN.	C FT.	C IN.	D FT.	D IN.	E FT.	E IN.	F FT.	F IN.	H FT.	H IN.	K FT.	K IN.	NOMINAL LENGTH FT.	NOMINAL LENGTH IN.	ACTUAL LENGTH FT.	ACTUAL LENGTH IN.	WEIGHT LBS.

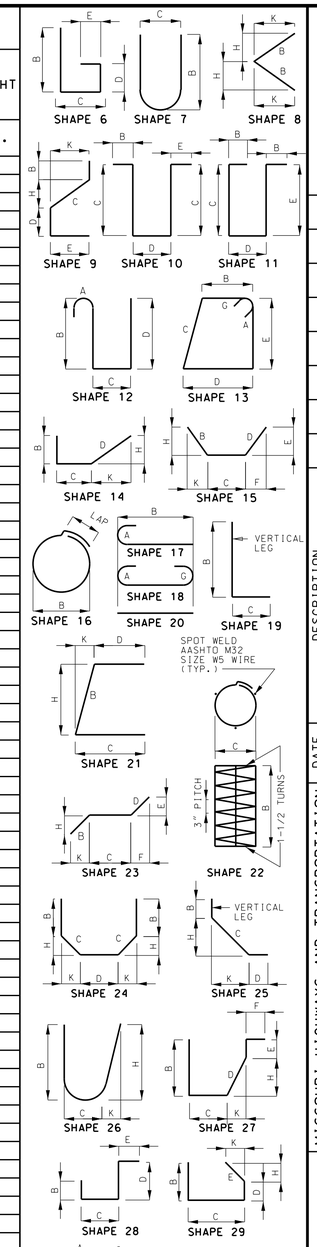

BENDING DIAGRAMS

"THIS MEDIA SHOULD NOT BE CONSIDERED A CERTIFIED DOCUMENT."

DATE PREPARED	10/8/2013
ROUTE	291
STATE	MO
DISTRICT	BR
SHEET NO.	7
COUNTY	JACKSON
JOB NO.	J4P2191
CONTRACT ID.	
PROJECT NO.	
BRIDGE NO.	A21201

DESCRIPTION	DATE

MISSOURI HIGHWAYS AND TRANSPORTATION COMMISSION

105 WEST CAPITOL
JEFFERSON CITY, MO 65102
1-888-ASK-MODOT (1-888-275-6636)

IF A SEAL IS PRESENT ON THIS SHEET IT HAS BEEN ELECTRONICALLY SEALED AND DATED.

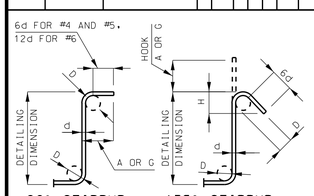

STIRRUP HOOK DIMENSIONS				
GRADES 40 - 50 - 60 KSI				
BAR SIZE	D (IN.)	90° HOOK	135° HOOK	
		HOOK A OR G	HOOK A OR G	APPROX. H
#4	2"	4 1/2"	4 1/2"	3"
#5	2 1/2"	6"	5 1/2"	3 3/4"
#6	4 1/2"	12"	8"	4 1/2"

NOTE: UNLESS OTHERWISE NOTED DIAMETER "D" IS THE SAME FOR ALL BENDS AND HOOKS ON A BAR.

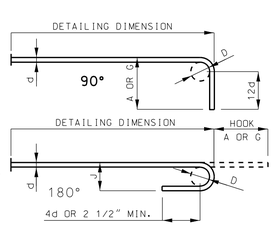

END HOOK DIMENSIONS				
BAR SIZE	D (IN.)	ALL GRADES		
		180° HOOKS		90° HOOKS
		A OR G	J	A OR G
#3	2 1/4"	5"	3"	6"
#4	3"	6"	4"	8"
#5	3 3/4"	7"	5"	10"
#6	4 1/2"	8"	6"	12"
#7	5 1/4"	10"	7"	14"
#8	6"	11"	8"	16"
#9	9 1/2"	15"	11 3/4"	19"
#10	10 3/4"	17"	13 1/4"	22"
#11	12"	19"	14 3/4"	2'-0"
#14	18 1/4"	2'-3"	21 3/4"	2'-7"

TWO ADDITIONAL #5-S2 ARE INCLUDED IN THE BAR BILL FOR TESTING.

NOTE:
ALL STANDARD HOOKS AND BENDS OTHER THAN 180 DEGREE ARE TO BE BENT WITH SAME PROCEDURE AS FOR 90 DEGREE STANDARD HOOKS.
HOOKS AND BENDS SHALL BE IN ACCORDANCE WITH THE PROCEDURES AS SHOWN ON THIS SHEET.
E = EPOXY COATED REINFORCEMENT.
S = STIRRUP.
X = BAR IS INCLUDED IN SUBSTRUCTURE QUANTITIES.
V = BAR DIMENSIONS VARY IN EQUAL INCREMENTS BETWEEN DIMENSIONS SHOWN ON THIS LINE AND THE FOLLOWING LINE.
NO. EA. = NUMBER OF BARS OF EACH LENGTH.
NOMINAL LENGTHS ARE BASED ON OUT TO OUT DIMENSIONS SHOWN IN BENDING DIAGRAMS AND ARE LISTED FOR FABRICATORS USE. (NEAREST INCH)
ACTUAL LENGTHS ARE MEASURED ALONG CENTERLINE BAR TO THE NEAREST INCH.
PAYWEIGHTS ARE BASED ON ACTUAL LENGTHS.
FOUR ANGLE OR CHANNEL SPACERS ARE REQUIRED FOR EACH COLUMN SPIRAL. SPACERS ARE TO BE PLACED ON INSIDE OF SPIRALS. LENGTH AND WEIGHT OF COLUMN SPIRALS DO NOT INCLUDE SPLICES OR SPACERS.
REINFORCING STEEL (GRADE 60) FY = 60,000 PSI.

Detailed Aug. 2013
Checked Aug. 2013

Note: This drawing is not to scale. Follow dimensions.

SEC/SUR 8 TWP 48N RGE 31W

MISSOURI HIGHWAYS AND TRANSPORTATION COMMISSION

U.I.P. & REHAB EXISTING (44'-87'-87'-2.5')(33.5')CONTINUOUS COMPOSITE (NON-COMPOSITE END SPANS) PLATE GIRDER SPANS (3° 21' R.A.)

"THIS MEDIA SHOULD NOT BE CONSIDERED A CERTIFIED DOCUMENT."

General Notes:

Design Specifications:

2002 - AASHTO LFD (17th Edition) Standard Specifications
Seismic Performance Category A
Bridge Deck Rating = 6

Design Loading:

HS20-44 (1973 & New Construction)
15#/sq. ft. Future Wearing Surface
Earth - 120 #/Cu. Ft., Equivalent Fluid Pressure 45#/Cu. Ft.

Design Unit Stresses:

Class B-1 Concrete (Superstructure, Safety Barrier Curb & Median Barrier Curb)	f'c = 4,000 psi
Reinforcing Steel (Grade 60)	fy = 60,000 psi
Structural Steel (ASTM A709 Grade 50)	fy = 50,000 psi

Fabricated Steel Connections:

Field connections shall be made with 7/8" diameter high strength bolts and 15/16" diameter holes, except as noted.

High strength bolts, nuts and washers will be sampled for quality assurance as specified in Sec 106.

Joint Filler:

All joint filler shall be in accordance with Sec 1057 for preformed sponge rubber expansion and partition joint filler, except as noted.

Reinforcing Steel:

Minimum clearance to reinforcing steel shall be 1 1/2", unless otherwise shown.

Bars bonded in old concrete not removed shall be cleanly stripped and embedded into new concrete where possible. If length is available, old bars shall extend into new concrete at least 40 diameters for plain bars and 30 diameters for deformed bars, unless otherwise noted.

Miscellaneous:

Outline of old work is indicated by light dashed lines. Heavy lines indicate new work.

Contractor shall verify all dimensions in field before ordering new material.

Concrete Protective Coatings:

Protective coating for concrete bents and piers (Epoxy) shall be applied as shown on the bridge plans and in accordance with Sec 711.

Traffic Handling:

Maintain traffic on structure during construction. See Sheet No. 2 for details of staged construction. See Roadway Plans for traffic control.

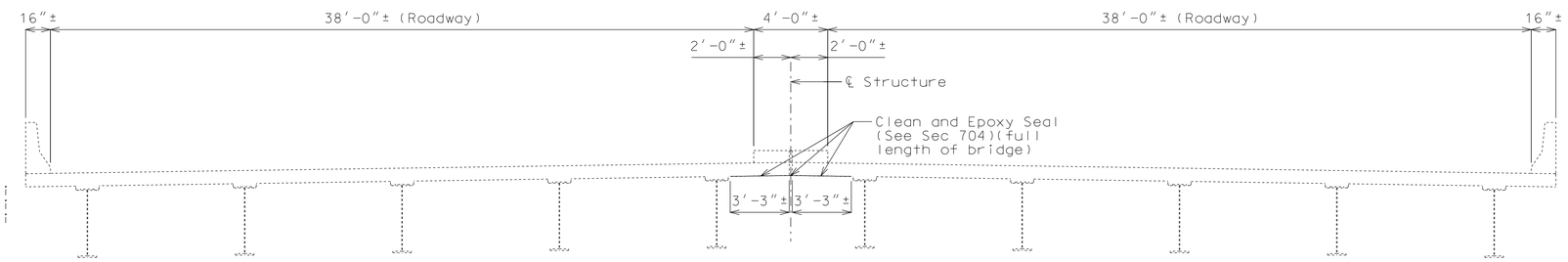

SECTION THRU EXISTING SLAB

Structural Steel Protective Coatings:

Protective Coating: System G in accordance with Sec 1081.

Surface Preparation: Surface preparation of the existing steel shall be in accordance with Sec 1081 for "Recoating of Structural Steel (System G, H or I)". The cost of surface preparation will be considered completely covered by the contract unit price per sq. foot for "Surface Preparation for Recoating Structural Steel".

Prime Coat (New Steel): The cost of the prime coat will be considered completely covered by the contract unit price for Hinge Modification. Tint of the prime coat for System G shall be similar to the color of the field coat to be used.

Prime Coat (Existing Steel): The cost of the prime coat will be considered completely covered by the contract unit price per sq. foot for "Field Application of Inorganic Zinc Primer". Tint of the prime coat for System G shall be similar to the color of the field coat to be used.

Field Coats: The color of the field coats shall be Gray (Federal Standard #26373). The cost of the intermediate field coat will be considered completely covered by the contract unit price per sq. foot for "Intermediate Field Coat (System G)". The cost of the finish field coat will be considered completely covered by the contract unit price per sq. foot for "Finish Field Coat (System G)".

Sec 1081.4.5 shall be modified such that the word "RECOATED" is replaced by the words "RECOATED-SYSTEM G-EXPANSION AREAS ONLY".

Estimated Quantities

Item		Total
Removal of Existing Expansion Joints & Adjacent Concrete	linear foot	228
Remove and Replace Barrier Curb	linear foot	28
Remove and Replace Raised Median Curb	sq. foot	56
Class B-1 Concrete	cu. yard	113.3
Substructure Repair (Unformed)	sq. foot	5
Clean and Epoxy Seal	sq. foot	1,647
Reinforcing Steel (Epoxy Coated)	pound	4,540
Protective Coating - Concrete Bents and Piers (Epoxy)	lump sum	1
Hinge Modification	each	10
Surface Preparation for Recoating Structural Steel	sq. foot	2,000
Field Application of Inorganic Zinc Primer	sq. foot	2,000
Intermediate Field Coat (System G)	sq. foot	2,000
Finish Field Coat (System G)	sq. foot	2,000
Laminated Neoprene Bearing Pad Assembly	each	10
Strip Seal Expansion Joint System	linear foot	76

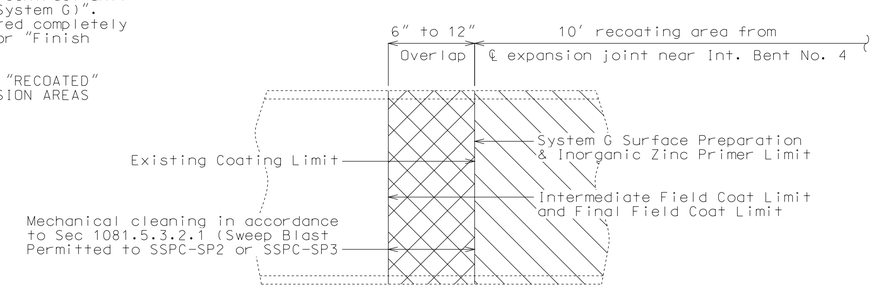

PART ELEVATION SHOWING LIMITS OF PAINT OVERLAP
(Vertical or horizontal paint limit. Horizontal limit shown)

Limits of Paint Overlap: System G shall overlap the existing coating between 6 inches and 12 inches in order to achieve maximum coverage at the paint limit of each complete system near the expansion and contraction areas. The final field coating shall be masked to provide crisp, straight lines and to prevent overspray beyond the overlap required.

REPAIRS TO BRIDGE: WOODS CHAPEL ROAD OVER I-470
STATE ROAD FROM RTE. 291 TO I-70
IN LEES SUMMIT
STA. 673+93.50± (Match Existing)

STD. 617.20
STD. 706.35

Designed June 2013
Detailed June 2013
Checked July 2013

Note: This drawing is not to scale. Follow dimensions.

DATE PREPARED	10/1/2013
ROUTE	I-470
STATE	MO
DISTRICT	BR
SHEET NO.	1
COUNTY	JACKSON
JOB NO.	J4P2191
CONTRACT ID.	
PROJECT NO.	
BRIDGE NO.	A21211

DESCRIPTION

DATE

MISSOURI HIGHWAYS AND TRANSPORTATION COMMISSION
105 WEST CAPITOL
JEFFERSON CITY, MO 65102
1-888-ASK-MODOT (1-888-275-6636)

IF A SEAL IS PRESENT ON THIS SHEET IT HAS BEEN ELECTRONICALLY SEALED AND DATED.

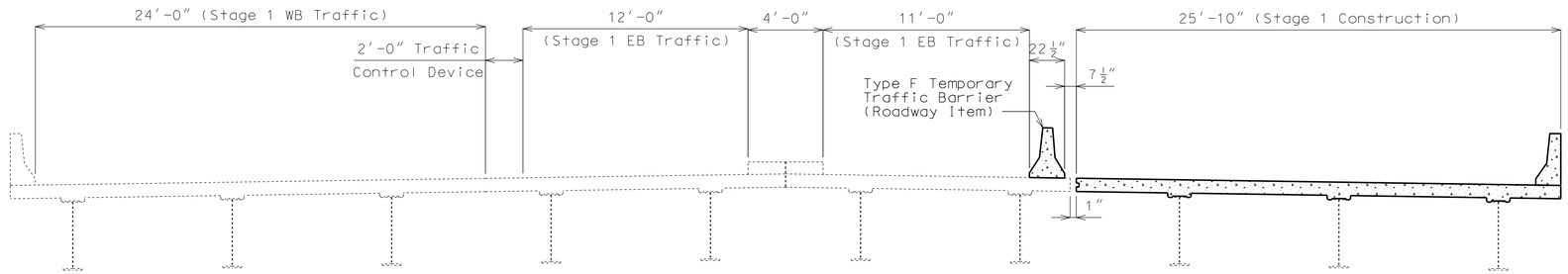

STAGE 1 CONSTRUCTION

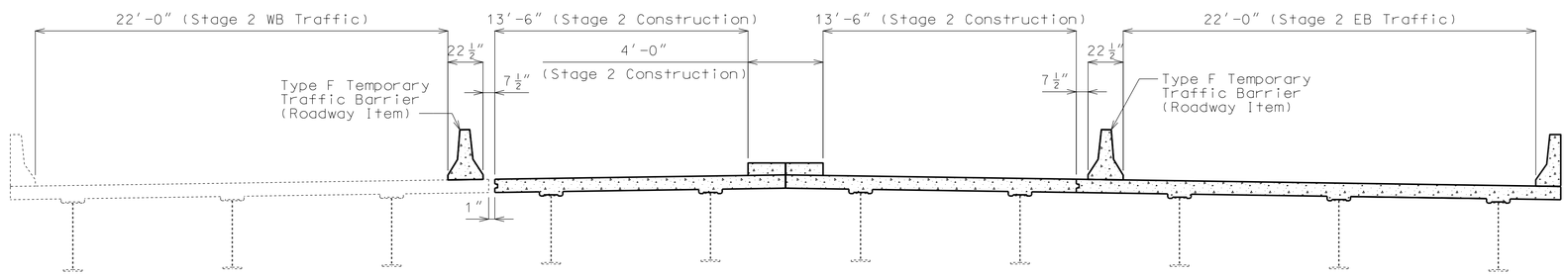

STAGE 2 CONSTRUCTION

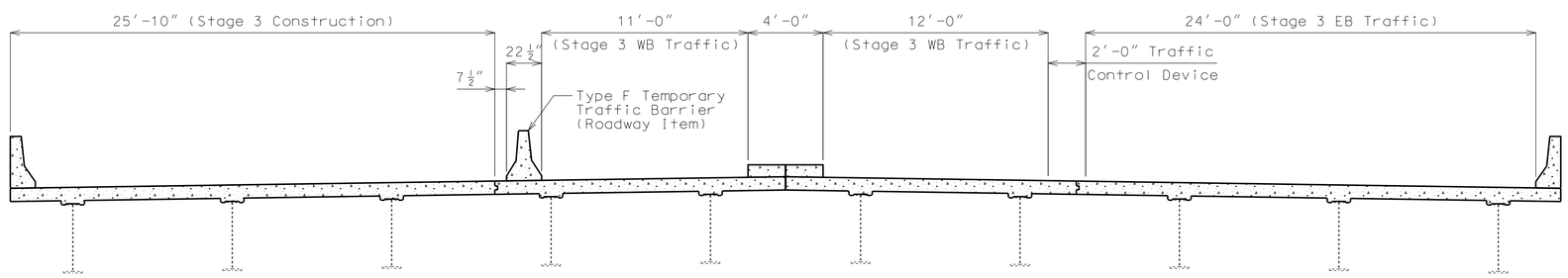

STAGE 3 CONSTRUCTION

Note:
Method of attachment for the Type F Temporary Barrier shall be the Tie-Down Strap.

DETAILS SHOWING STAGED CONSTRUCTION AT EXPANSION JOINTS

Detailed June 2013
Checked July 2013

Note: This drawing is not to scale. Follow dimensions.

"THIS MEDIA SHOULD NOT BE CONSIDERED A CERTIFIED DOCUMENT."

DATE PREPARED	10/1/2013
ROUTE	I-470
STATE	MO
DISTRICT	BR
SHEET NO.	2
COUNTY	JACKSON
JOB NO.	J4P2191
CONTRACT ID.	
PROJECT NO.	
BRIDGE NO.	A21211

DATE	DESCRIPTION

MISSOURI HIGHWAYS AND TRANSPORTATION COMMISSION

105 WEST CAPITOL
JEFFERSON CITY, MO 65102
1-888-ASK-MODOT (1-888-275-6636)

IF A SEAL IS PRESENT ON THIS SHEET IT HAS BEEN ELECTRONICALLY SEALED AND DATED.

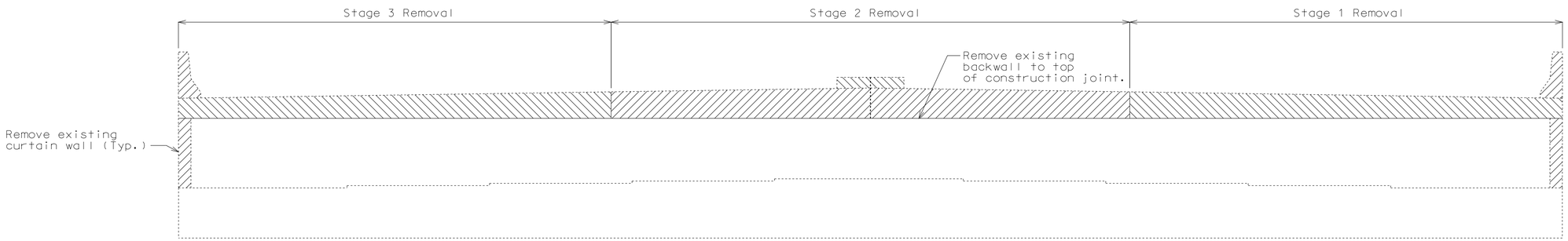

DETAILS OF CONCRETE REMOVAL @ END BENTS

Note:
The cost of concrete removal as shown, including existing expansion device, will be considered completely covered by the contract unit price for Removal of Existing Expansion Joints & Adjacent Concrete.

For limits and payment of safety barrier curb and raised median curb, see Sheets No. 9 thru 11.

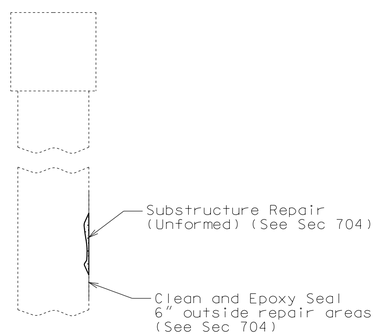

TYPICAL SECTION THRU
INT. BENT NO. 2 SOUTH COLUMN
SHOWING PROTECTIVE COATING
AND SUBSTRUCTURE REPAIRS

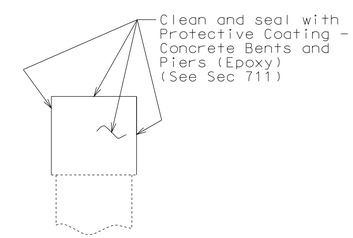

TYPICAL SECTION THRU
INT. BENT NO. 4 SHOWING
PROTECTIVE COATING

"THIS MEDIA SHOULD NOT BE CONSIDERED A CERTIFIED DOCUMENT."

DATE PREPARED	10/1/2013
ROUTE	I-470
STATE	MO
DISTRICT	BR
SHEET NO.	3
COUNTY	JACKSON
JOB NO.	J4P2191
CONTRACT ID.	
PROJECT NO.	
BRIDGE NO.	A21211

DATE	DESCRIPTION

MISSOURI HIGHWAYS AND TRANSPORTATION COMMISSION
105 WEST CAPITOL
JEFFERSON CITY, MO 65102
1-888-ASK-MODOT (1-888-275-6636)

IF A SEAL IS PRESENT ON THIS SHEET IT HAS BEEN ELECTRONICALLY SEALED AND DATED.

Detailed June 2013
Checked July 2013

Note: This drawing is not to scale. Follow dimensions.

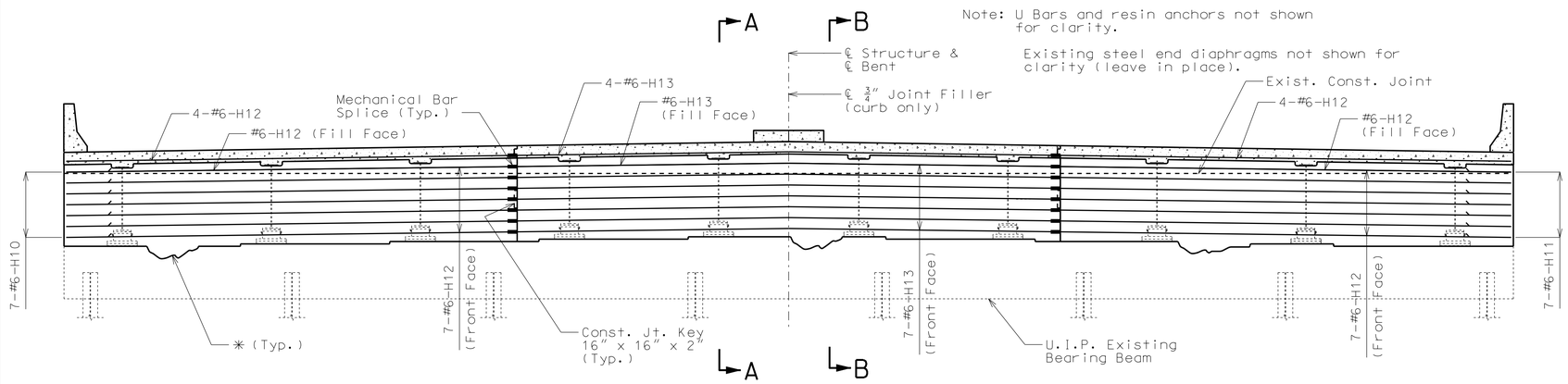

SECTION NEAR END BENT

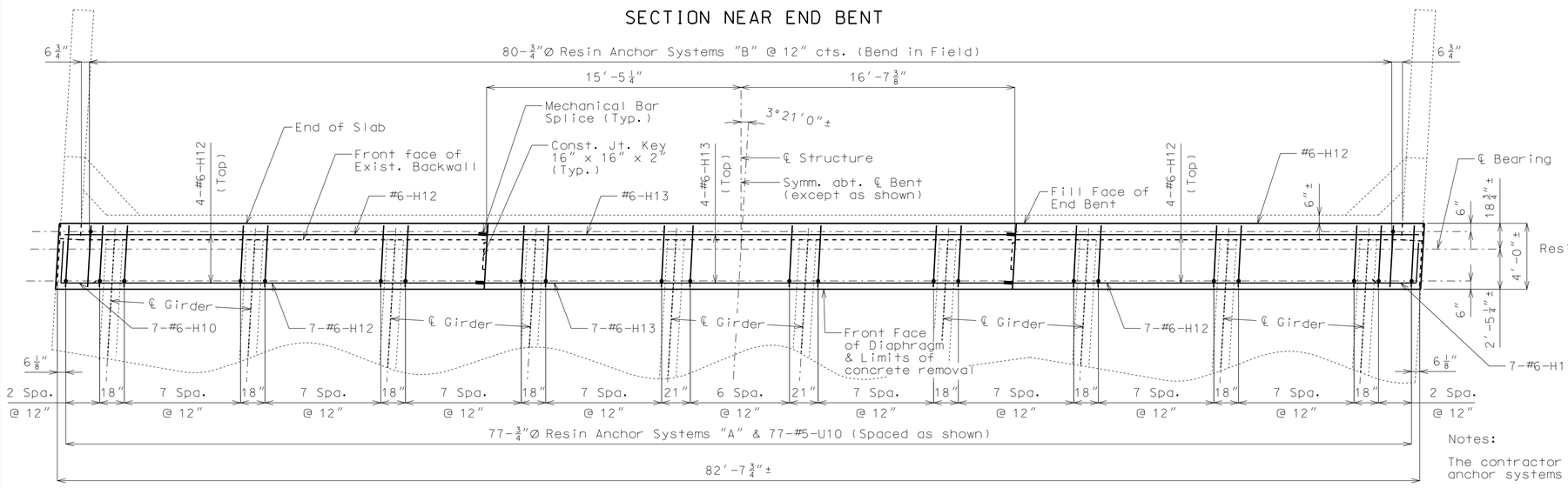

PART PLAN

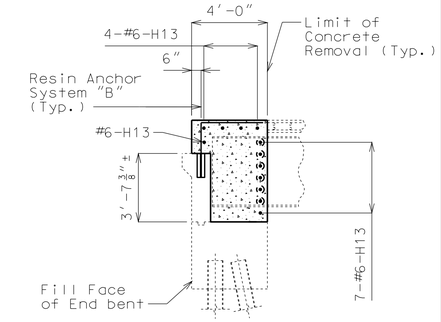

SECTION A-A

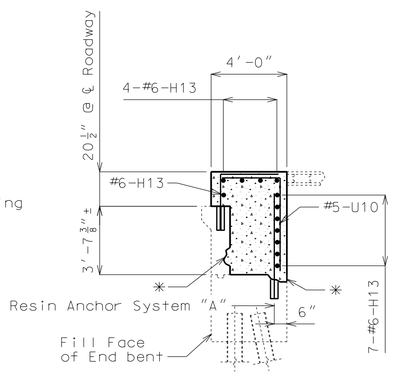

SECTION B-B

Note:
Raised median not shown for clarity.

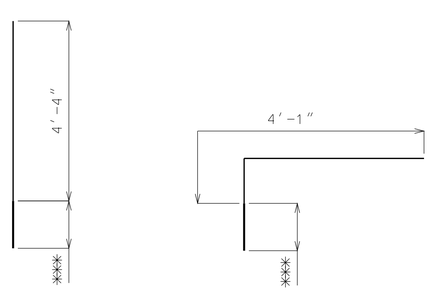

Resin Anchor System "A" (154 Req'd.)

Resin Anchor System "B" (Field bend) (160 Req'd.)

✳✳✳ Manufacturer's recommended embedment length plus depth of repair (5" min. into sound concrete)

DETAILS OF RESIN ANCHOR SYSTEMS

Notes:

✳ Deteriorated concrete at end bents shall be repaired in accordance with Sec 704 except that repair areas shall be poured monolithically with diaphragm using Class B-1 Concrete. Cost of equipment, material and labor required to prepare the repair areas will be considered completely covered by the contract unit price for Class B-1 Concrete.

All concrete in the end bent shall be Class B-1.

Payment for diaphragm and slab concrete, complete in place, will be considered completely covered by the contract unit price for Class B-1 Concrete.

Payment for furnishing and installing diaphragm and slab reinforcing steel, complete in place, will be considered completely covered by the contract unit price for Reinforcing Steel (Bridges).

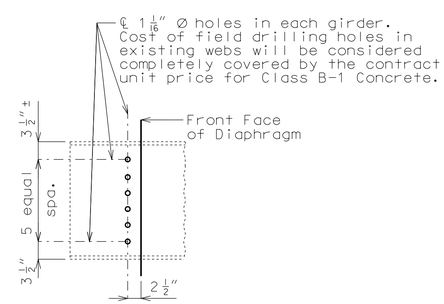

DETAIL OF WEB HOLES

Notes:

The contractor shall use one of the qualified resin anchor systems in accordance with Sec 1039.

Cost of furnishing and installing the resin anchor systems, complete-in-place, will be considered completely covered by the contract unit price for Class B-1 Concrete.

The minimum embedment depth in concrete with f'c = 4,000 psi for the resin anchor system shall be that required to meet the minimum ultimate pullout strength in accordance with Sec 1039 but shall not be less than 5".

An epoxy coated #6 Grade 60 reinforcing bar shall be substituted for the ¾" Ø threaded rod.

The exposed and accessible surfaces of the existing structural steel and bearings that will be encased in concrete shall be cleaned with a minimum of SSPC-SP-2 surface preparation before concrete is poured. Payment for cleaning steel to be encased in concrete will be considered completely covered by the contract unit price for Class B-1 Concrete.

The contractor shall use a mechanical bar splice for H12 & H13 bars at the specified location. The total bar lengths for bars indicated in the bill of reinforcing steel are determined based on the end of the bars being located flush to the face of the construction joint. No additional payment will be made for any additional bar lengths required for the mechanical bar splices. Mechanical bar splices shall be in accordance with Sec 706 except that no measurement will be made for mechanical bar splice and will be considered completely covered by the contract unit price for the reinforcing steel.

DETAILS OF END BENTS NO. 1 & NO. 5

(End Bent No. 1 shown, End bent No. 5 similar)

Detailed June 2013
Checked July 2013

Note: This drawing is not to scale. Follow dimensions.

"THIS MEDIA SHOULD NOT BE CONSIDERED A CERTIFIED DOCUMENT."

DATE PREPARED	
10/1/2013	
ROUTE	STATE
I-470	MO
DISTRICT	SHEET NO.
BR	4
COUNTY	
JACKSON	
JOB NO.	
J4P2191	
CONTRACT ID.	
PROJECT NO.	
BRIDGE NO.	
A21211	

DATE	DESCRIPTION

MISSOURI HIGHWAYS AND TRANSPORTATION COMMISSION
105 WEST CAPITOL
JEFFERSON CITY, MO 65102
1-888-ASK-MODOT (1-888-275-6636)

IF A SEAL IS PRESENT ON THIS SHEET IT HAS BEEN ELECTRONICALLY SEALED AND DATED.

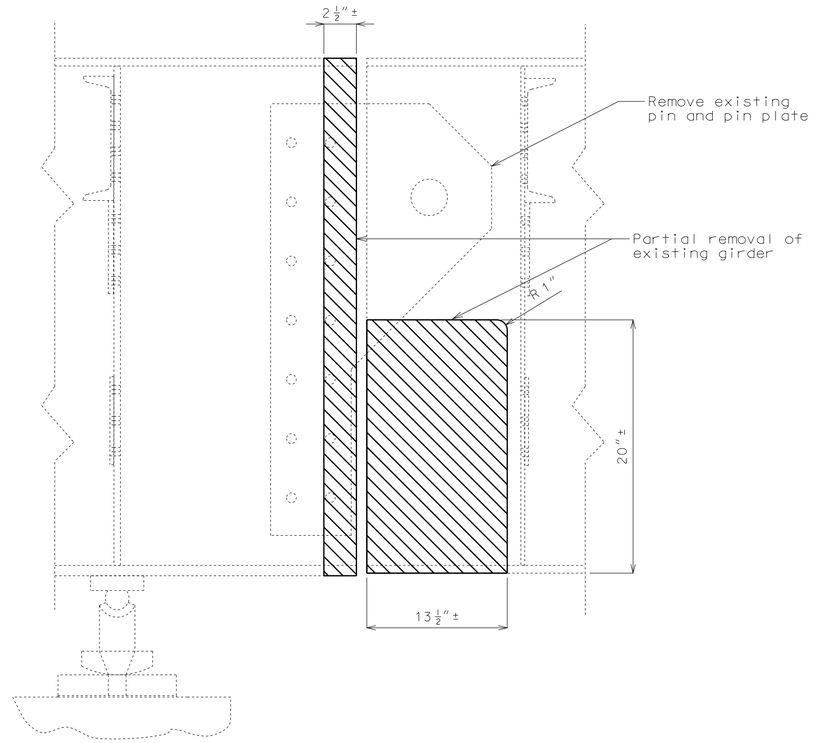

PART ELEVATION SHOWING
REMOVAL FOR ALL GIRDERS

Notes:

Removal of existing pins, pin plates and any other removal incidental to hinge modification will be considered completely covered by the contract unit price for Hinge Modification per each.

Temporary falsework shall support a load of 35 kips/girder (service dead load plus 50 psf construction load without factor of safety). An additional 55 kips/girder (service live load without factor of safety) shall be supported if traffic loads are present.

Bolts on existing diaphragms at hinge location may be loosened to snug tight before Laminated Neoprene Bearing Pad Assembly is installed, then replaced with new high strength bolts after hinge modification is complete.

Any weld material remaining after pin plate removal shall be ground flush.

Work this sheet with Sheet No. 6.

DETAILS OF HINGE MODIFICATION NEAR BENT NO. 4

Detailed June 2013
Checked July 2013

Note: This drawing is not to scale. Follow dimensions.

"THIS MEDIA SHOULD NOT BE CONSIDERED A CERTIFIED DOCUMENT."

DATE PREPARED	10/1/2013
ROUTE	I-470
STATE	MO
DISTRICT	BR
SHEET NO.	5
COUNTY	JACKSON
JOB NO.	J4P2191
CONTRACT ID.	
PROJECT NO.	
BRIDGE NO.	A21211

DATE	DESCRIPTION

MISSOURI HIGHWAYS AND TRANSPORTATION COMMISSION
105 WEST CAPITOL
JEFFERSON CITY, MO 65102
1-888-ASK-MODOT (1-888-275-6636)

IF A SEAL IS PRESENT ON THIS SHEET IT HAS BEEN ELECTRONICALLY SEALED AND DATED.

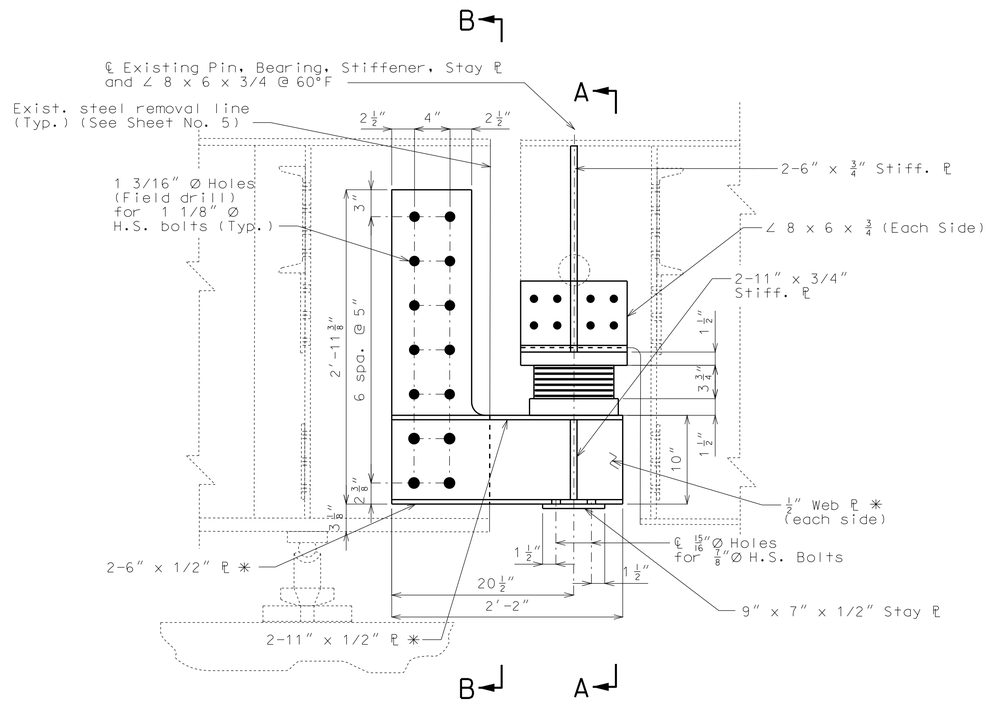

PART ELEVATION OF GIRDER

Note:
Exist. plug welds shall be drilled or cored out to 1 3/16"Ø holes and filled with 1 1/8"Ø H.S. bolts. For field drilling and reaming the holes, no flame drilling will be permitted. All high strength bolts that replace plug welds shall have a flat washer under the head and nut.

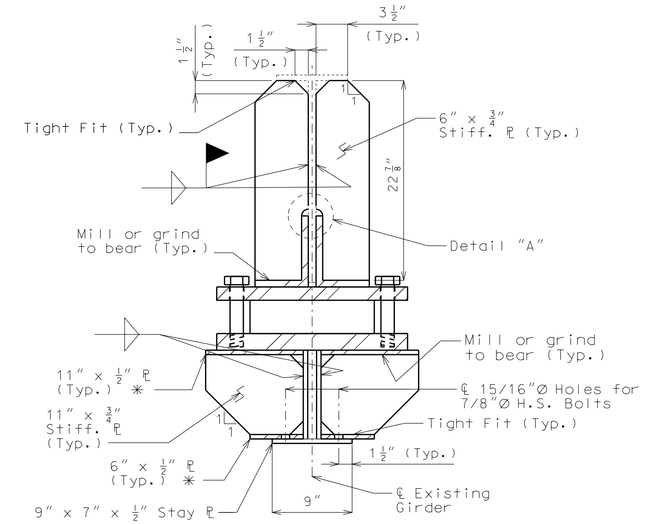

SECTION A-A

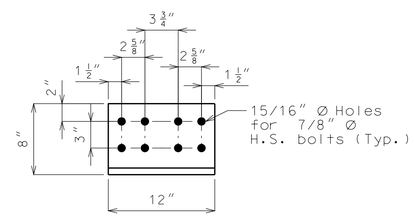

∠ 8 x 6 x 3/4 DETAIL

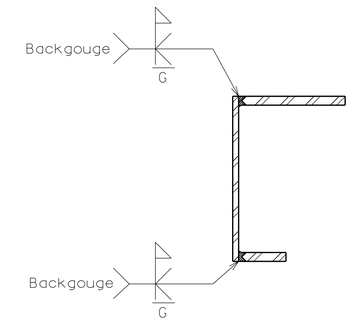

TYPICAL WELDING DETAILS

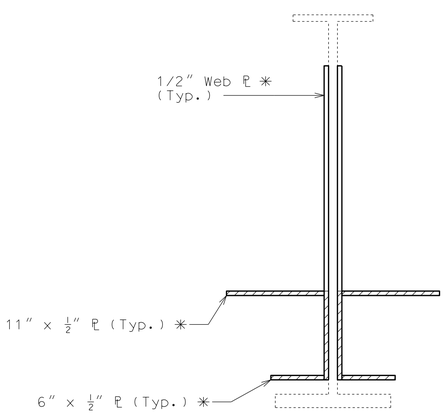

SECTION B-B

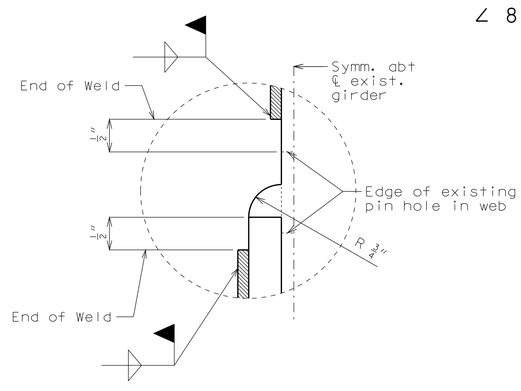

DETAIL "A"

Notes:
All structural steel shall be ASTM A709 Grade 50.

For details of bearing not shown, see Sheet No. 7.

✳ Indicates plates subject to notch toughness requirements.

Welds shall be NDT by the magnetic particle process as required by AASHTO/AWS D1.5 2002, Bridge Welding Code clause 6.7.2.

New construction shall be installed parallel to grade.

DETAILS OF HINGE MODIFICATION NEAR BENT NO. 4

Detailed June 2013
Checked July 2013

Note: This drawing is not to scale. Follow dimensions.

"THIS MEDIA SHOULD NOT BE CONSIDERED A CERTIFIED DOCUMENT."

DATE PREPARED	10/1/2013
ROUTE	I-470
STATE	MO
DISTRICT	BR
SHEET NO.	6
COUNTY	JACKSON
JOB NO.	J4P2191
CONTRACT ID.	
PROJECT NO.	
BRIDGE NO.	A21211

DESCRIPTION	DATE

MISSOURI HIGHWAYS AND TRANSPORTATION COMMISSION
105 WEST CAPITOL
JEFFERSON CITY, MO 65102
1-888-ASK-MODOT (1-888-275-6636)

IF A SEAL IS PRESENT ON THIS SHEET IT HAS BEEN ELECTRONICALLY SEALED AND DATED.

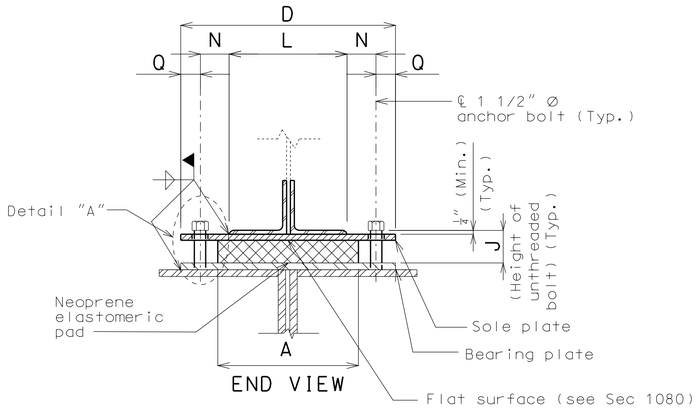

END VIEW

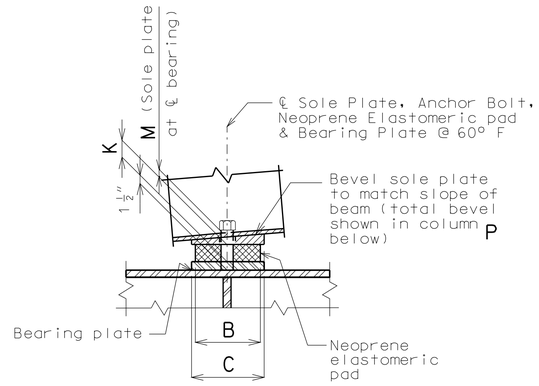

SIDE VIEW

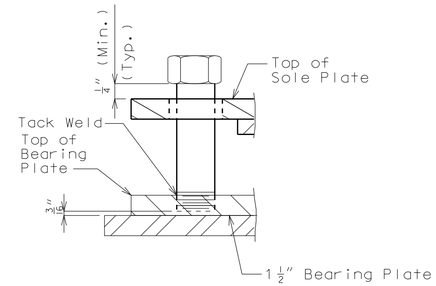

DETAIL "A"

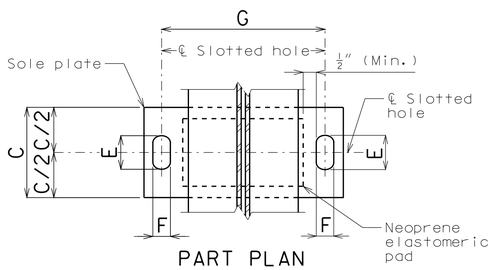

PART PLAN

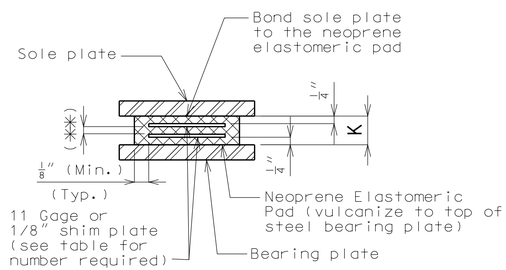

(✱✱) Layers of 1/2" elastomer alternating with 11 gage or 1/8" shim plate

NEOPRENE ELASTOMERIC PAD

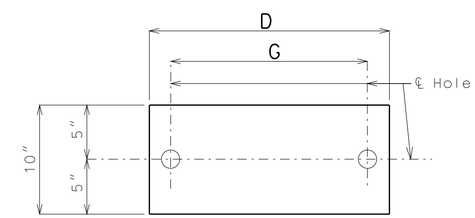

DETAIL OF BEARING PLATE (1 1/2" THICK)

EXPANSION BEARINGS																
HINGE NEAR BENT NO.	A	B	C	D	E	F	G	J	K	L	M	N	P	Q	R	NUMBER OF SHIM PLATES(✱)	NUMBER REQUIRED
4	14"	9"	10"	21 1/2"	5 1/2"	1 5/8"	17"	5 1/2"	3 3/4"	12 7/8"	1 1/2"	2 1/16"	0	2 1/4"	1/8"	6	10
																TOTAL BEARINGS	10

(✱) The required shim plate shall be placed between layers of elastomer and molded together to form an integral unit.

GENERAL NOTES:

Anchor bolts shall be 1 1/2" Ø ASTM F1554 Grade 55 steel bolts. Actual manufacturer's certified mill test reports (chemical and mechanical) shall be provided.

Anchor bolt shall be at the ℄ of slotted hole at 60°F. Bearing position shall be adjusted R for each 10° fall or rise in temperature at installation.

All structural steel for the anchor bolts shall be coated with a minimum of two coats of inorganic zinc primer (5 mils minimum).

Neoprene Elastomeric Pads shall be 60 Durometer.

Structural steel for sole plate and bearing plate shall be ASTM A709 Grade 50 and shall be coated with a minimum of two coats of inorganic zinc primer (5 mils minimum).

Laminated Neoprene Bearing Pad Assembly shall be in accordance with Sec 716.

The bearing plate shall be tapped to receive 1 1/2" Ø anchor bolts.

The sole plate and bearing plate shall be furnished with the bearings and will be considered completely covered by the contract unit price for Laminated Neoprene Bearing Pad Assembly.

DETAILS OF LAMINATED NEOPRENE BEARING PAD ASSEMBLY

Detailed June 2013
Checked July 2013

Note: This drawing is not to scale. Follow dimensions.

"THIS MEDIA SHOULD NOT BE CONSIDERED A CERTIFIED DOCUMENT."

DATE PREPARED	
10/1/2013	
ROUTE I-470	STATE MO
DISTRICT BR	SHEET NO. 7
COUNTY JACKSON	
JOB NO. J4P2191	
CONTRACT ID.	
PROJECT NO.	
BRIDGE NO. A21211	

DESCRIPTION

DATE

MISSOURI HIGHWAYS AND TRANSPORTATION COMMISSION

105 WEST CAPITOL
JEFFERSON CITY, MO 65102
1-888-ASK-MODOT (1-888-275-6636)

IF A SEAL IS PRESENT ON THIS SHEET IT HAS BEEN ELECTRONICALLY SEALED AND DATED.

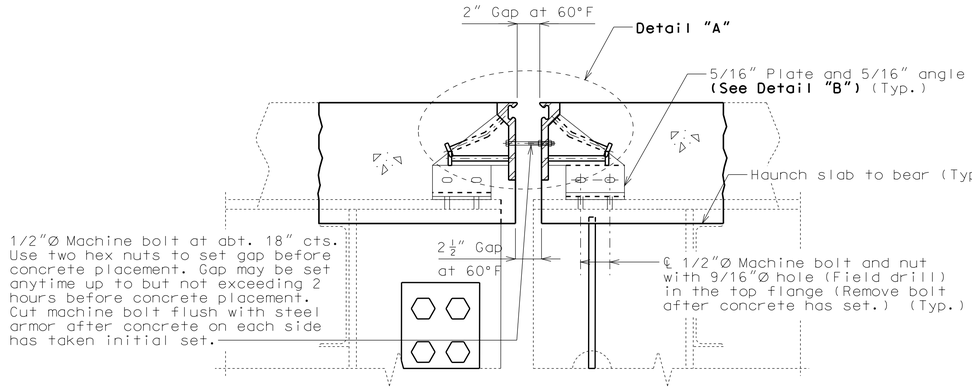

SECTION A-A

Note: Strip seal gland not shown for clarity.

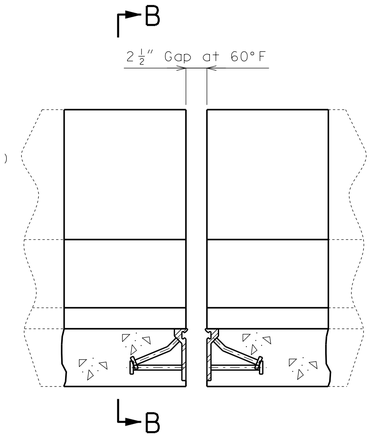

Note: Strip seal gland not shown for clarity.

PART ELEVATION OF BARRIER CURB

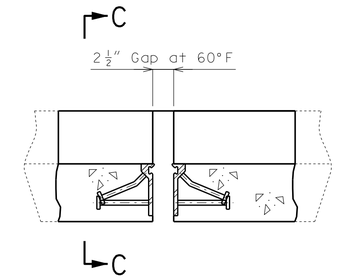

Note: Strip seal gland not shown for clarity.

PART ELEVATION OF MEDIAN CURB

GENERAL NOTES:

Expansion joint system shall be fabricated in one section, except for stage construction and when the length is over 50 feet. A complete joint penetration groove welded splice shall be required. Welds shall be ground flush to provide a smooth surface. The expansion joint system shall be fabricated and installed to the crown and grade of the roadway.

The strip seal gland shall be installed in joints in one continuous piece without field splices. Factory splicing will be permitted for joints in excess of 53 feet.

Structural steel for the expansion joint system shall be ASTM A709 Grade 36 except the steel armor may be ASTM A709 Grade 50W. Anchors for the expansion joint system shall be in accordance with Sec 1037. Strip seal expansion joint system shall be in accordance with Sec 717.

Structural steel for the expansion joint system shall be coated with a minimum of two coats of inorganic zinc primer (5 mils minimum) or galvanized in accordance with ASTM A123. Anchors need not be protected from overspray.

Plan dimensions are based on installation at 60°F. The expansion gap and other dimensions shall be increased or decreased 1/8" for each 10° fall or rise in temperature at installation.

Longitudinal reinforcing steel shall be cut/bent so that ends shall not be more than ±1" from vertical leg of the steel armor at the expansion joint system.

Concrete shall be forced under and around steel armor and anchors. Proper consolidation of the concrete shall be achieved by localized internal vibration.

Work this sheet with Sheet No. 9.

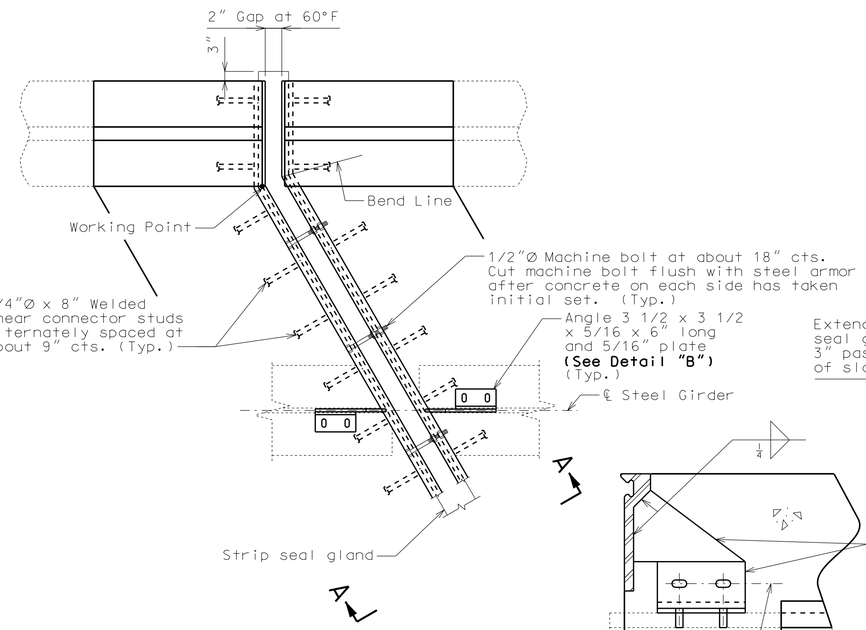

PART PLAN

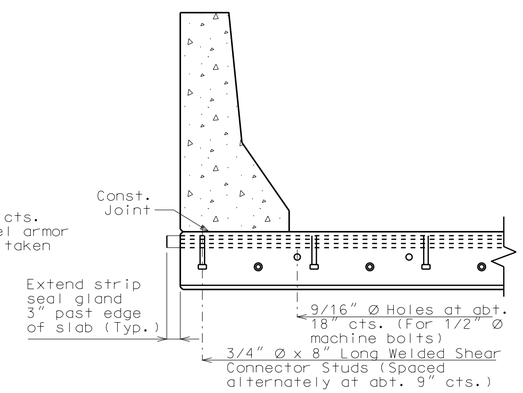

PART SECTION B-B

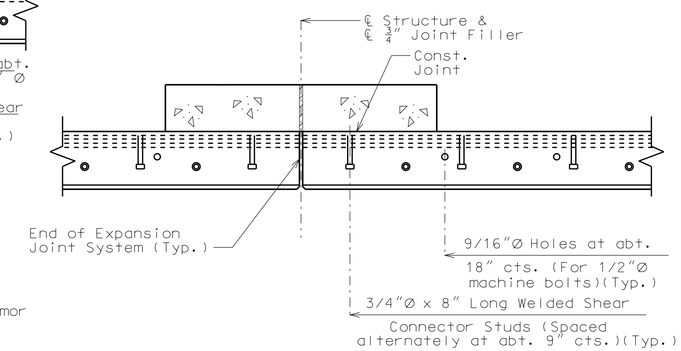

PART SECTION C-C

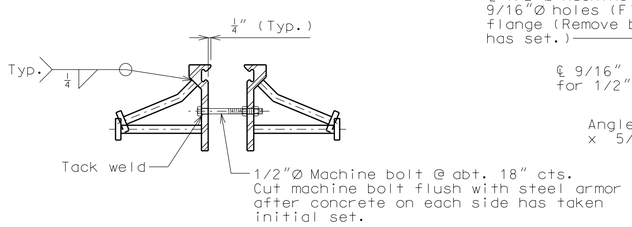

DETAIL "A"

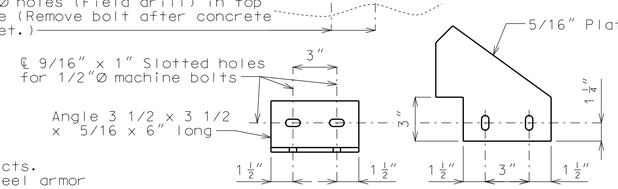

DETAIL "B"

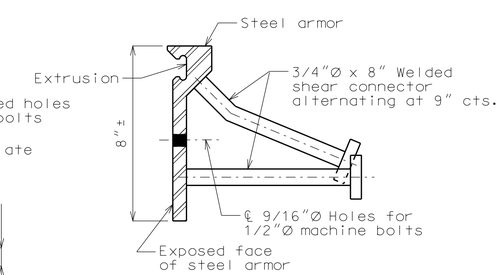

DETAIL OF JOINT ARMOR

Strip seal gland size = 4"

DETAIL OF GLAND

DETAILS OF STRIP SEAL NEAR INTERMEDIATE BENT NO. 4

Detailed June 2013
Checked July 2013

Note: This drawing is not to scale. Follow dimensions.

"THIS MEDIA SHOULD NOT BE CONSIDERED A CERTIFIED DOCUMENT."

DATE PREPARED	
10/1/2013	
ROUTE	STATE
I-470	MO
DISTRICT	SHEET NO.
BR	8
COUNTY	
JACKSON	
JOB NO.	
J4P2191	
CONTRACT ID.	
PROJECT NO.	
BRIDGE NO.	
A21211	

DATE	DESCRIPTION

IF A SEAL IS PRESENT ON THIS SHEET IT HAS BEEN ELECTRONICALLY SEALED AND DATED.

MISSOURI HIGHWAYS AND TRANSPORTATION COMMISSION
105 WEST CAPITOL
JEFFERSON CITY, MO 65102
1-888-ASK-MODOT (1-888-275-6636)

Notes:
Existing conduit attached to right safety barrier curb (not shown) that falls within the area of curb removal shall be protected from damage.

Any damage to the conduit shall be repaired or replaced, at the contractor's expense, as directed by the engineer.

Conduit shall be reattached in removal areas. Cost of reattaching conduit will be considered completely covered by the contract unit price for Remove and Replace Barrier Curb.

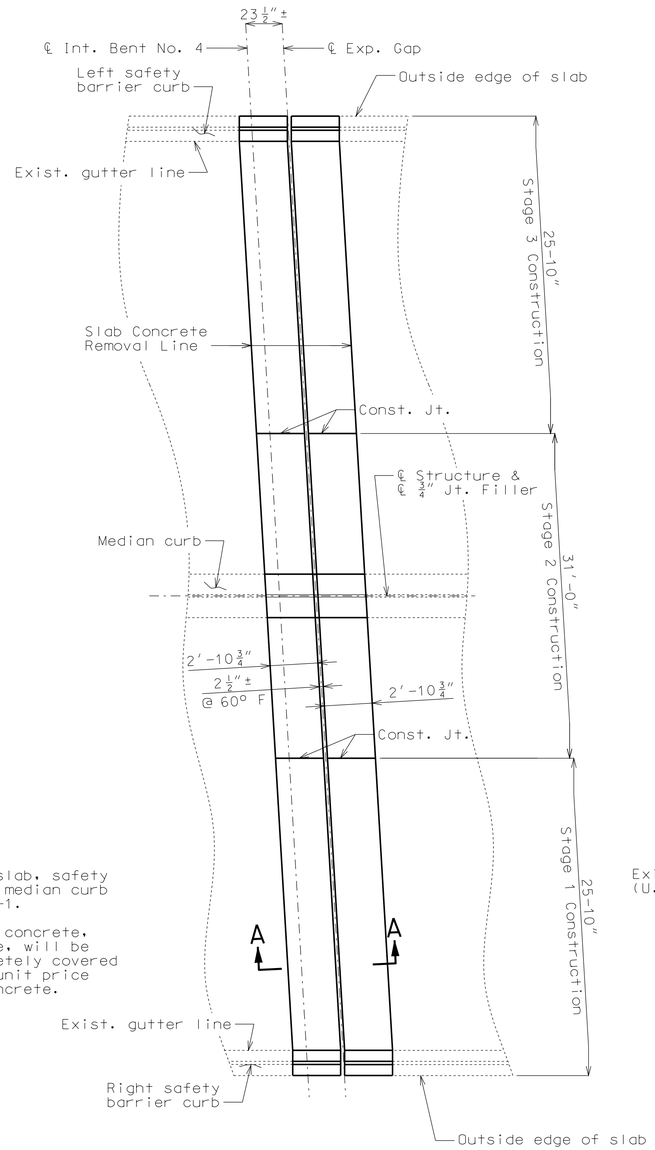

Notes:
Concrete in the slab, safety barrier curb and median curb shall be Class B-1.

Payment for slab concrete, complete in place, will be considered completely covered by the contract unit price for Class B-1 Concrete.

PART PLAN OF SLAB NEAR INT. BENT NO. 4

Note: Expansion device not shown for clarity.

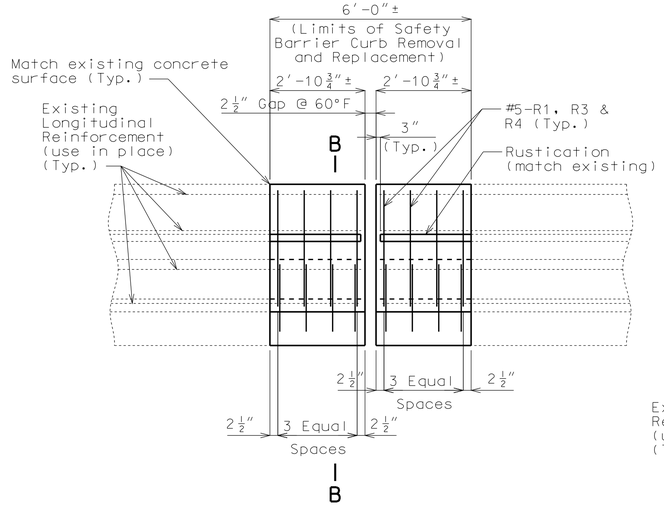

PART ELEVATION OF RIGHT SAFETY BARRIER CURB

(Right barrier curb shown, left barrier curb similar)

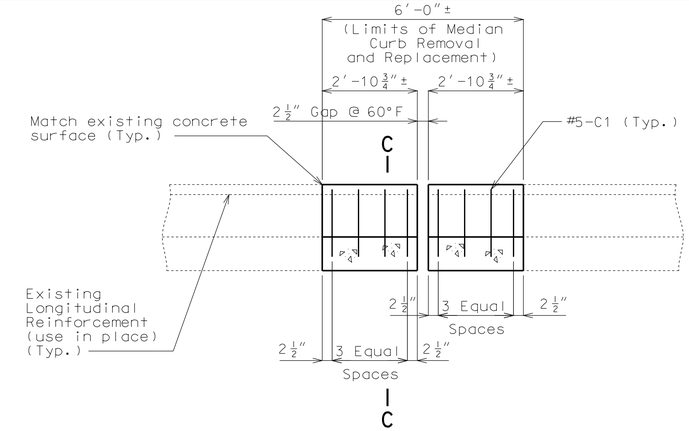

PART ELEVATION OF MEDIAN CURB

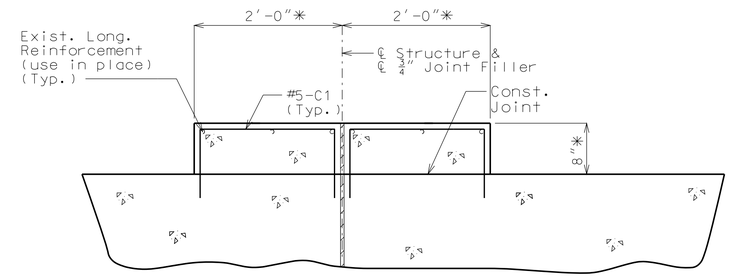

PART SECTION C-C

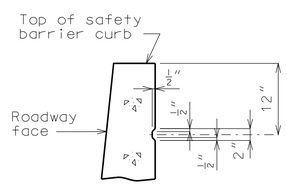

PART SECTION SHOWING RUSTICATION DETAILS

Notes:
Payment for curb removal and all new concrete and reinforcement for safety barrier curb, complete in place, will be considered completely covered by the contract unit price for Remove and Replace Barrier Curb per linear foot.

Payment for curb removal and all new concrete and reinforcement for raised median curb, complete in place, will be considered completely covered by the contract unit price for Remove and Replace Raised Median Curb per square foot.

All exposed edges of new curbs shall match existing curbs.

Work this sheet with Sheet No. 8.

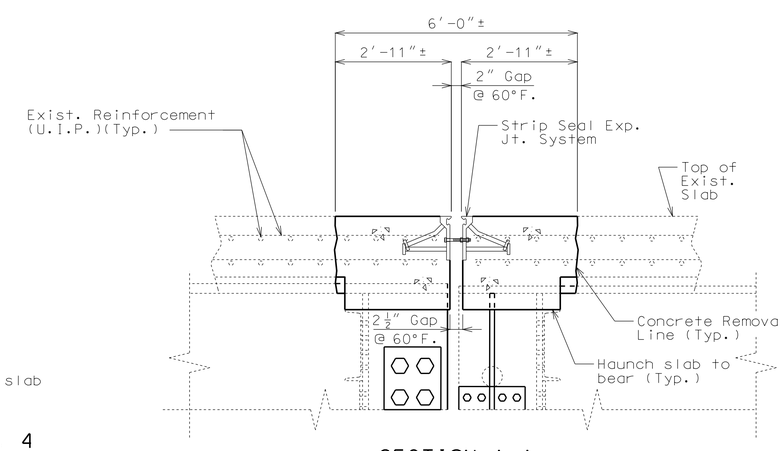

SECTION A-A

Note: Strip seal gland not shown clarity.

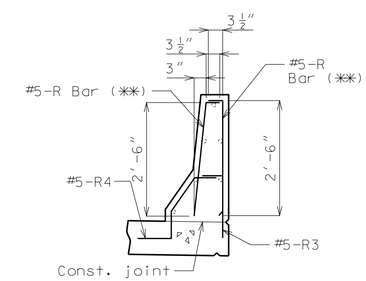

R-BAR PERMISSIBLE ALTERNATE SHAPE

(✳✳) The R1 bar may be separated into two bars as shown, at the contractor's option. (All dimensions are out to out.)

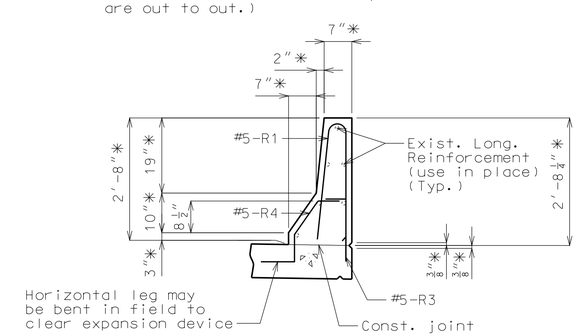

PART SECTION B-B

✳ Match existing.

"THIS MEDIA SHOULD NOT BE CONSIDERED A CERTIFIED DOCUMENT."

DATE PREPARED	10/1/2013
ROUTE	I-470
STATE	MO
DISTRICT	BR
SHEET NO.	9
COUNTY	JACKSON
JOB NO.	J4P2191
CONTRACT ID.	
PROJECT NO.	
BRIDGE NO.	A21211

DATE	DESCRIPTION

MISSOURI HIGHWAYS AND TRANSPORTATION COMMISSION

105 WEST CAPITOL
JEFFERSON CITY, MO 65102
1-888-ASK-MODOT (1-888-275-6636)

IF A SEAL IS PRESENT ON THIS SHEET IT HAS BEEN ELECTRONICALLY SEALED AND DATED.

Detailed June 2013
Checked July 2013

Note: This drawing is not to scale. Follow dimensions.

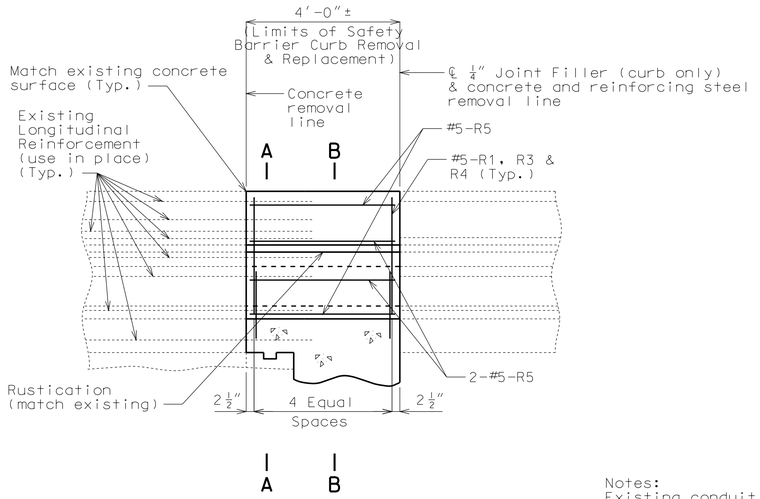

PART ELEVATION OF RIGHT SAFETY BARRIER CURB

(Right barrier curb shown, left barrier curb similar)

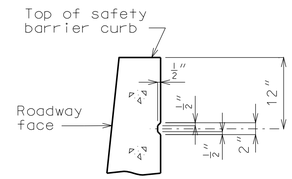

PART SECTION SHOWING RUSTICATION DETAILS

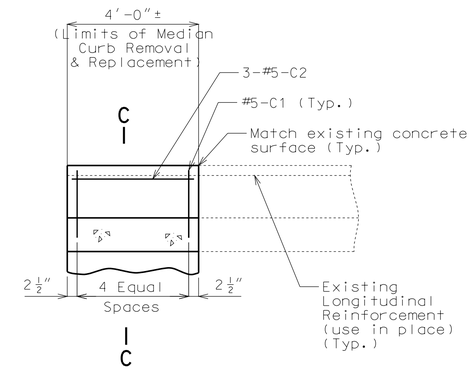

PART ELEVATION OF RAISED MEDIAN CURB

Notes:
Existing conduit attached to right safety barrier curb (not shown) that falls within the area of curb removal shall be protected from damage.

Any damage to the conduit shall be repaired or replaced, at the contractor's expense, as directed by the engineer.

Conduit shall be reattached in removal areas. Cost of reattaching conduit will be considered completely covered by the contract unit price for Remove and Replace Barrier Curb.

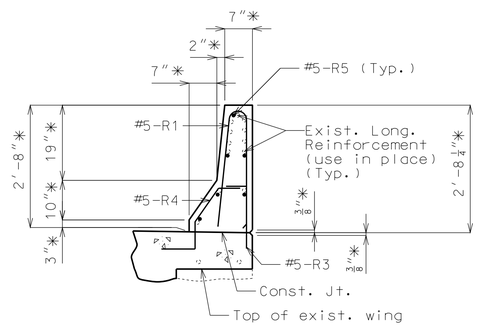

PART SECTION A-A

✳ Match existing.

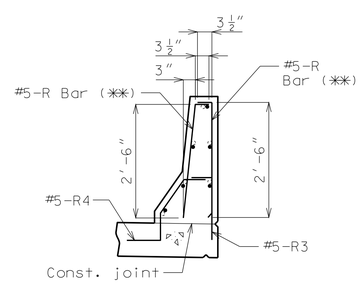

R-BAR PERMISSIBLE ALTERNATE SHAPE

(✳✳) The R1 bar may be separated into two bars as shown, at the contractor's option. (All dimensions are out to out.)

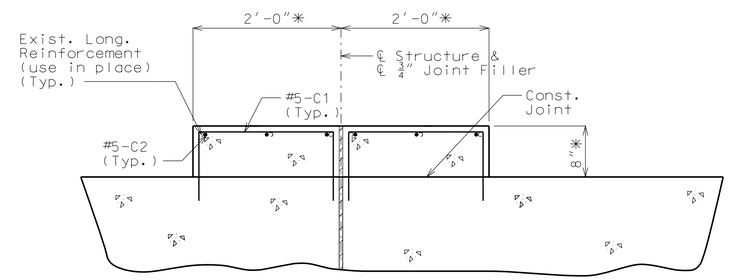

PART SECTION C-C

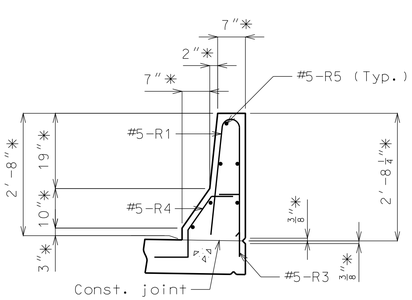

PART SECTION B-B

✳ Match existing.

Notes:
Concrete in the safety barrier curb and raised median curb shall be Class B-1.

All exposed edges of new curbs shall match existing curbs.

Payment for curb removal and all new concrete and reinforcement for safety barrier curb, complete in place, will be considered completely covered by the contract unit price for Remove and Replace Barrier Curb per linear foot.

Payment for curb removal and all new concrete and reinforcement for raised median barrier curb, complete in place, will be considered completely covered by the contract unit price for Remove and Replace Raised Median Curb per linear foot.

DETAILS OF CURB REPLACEMENT AT END BENT NO. 1

Detailed June 2013
Checked July 2013

Note: This drawing is not to scale. Follow dimensions.

"THIS MEDIA SHOULD NOT BE CONSIDERED A CERTIFIED DOCUMENT."

DATE PREPARED	
10/1/2013	
ROUTE	STATE
I-470	MO
DISTRICT	SHEET NO.
BR	10
COUNTY	
JACKSON	
JOB NO.	
J4P2191	
CONTRACT ID.	
PROJECT NO.	
BRIDGE NO.	
A21211	

DESCRIPTION	DATE

MISSOURI HIGHWAYS AND TRANSPORTATION COMMISSION

105 WEST CAPITOL
JEFFERSON CITY, MO 65102
1-888-ASK-MODOT (1-888-275-6636)

IF A SEAL IS PRESENT ON THIS SHEET IT HAS BEEN ELECTRONICALLY SEALED AND DATED.

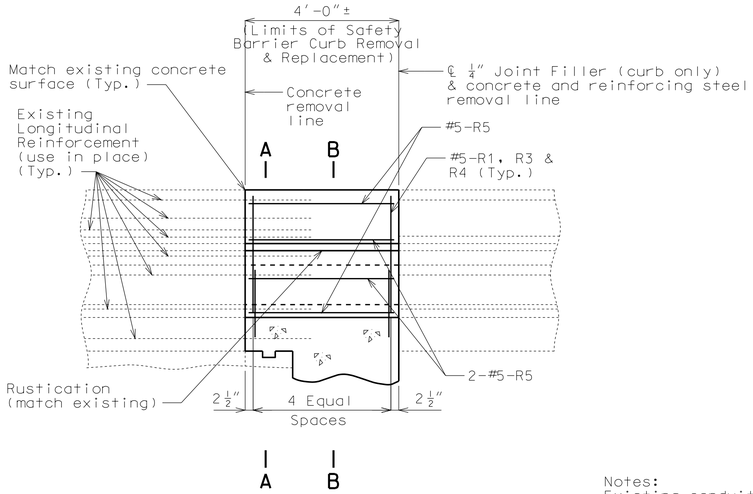

PART ELEVATION OF LEFT SAFETY BARRIER CURB

(Right barrier curb shown, left barrier curb similar)

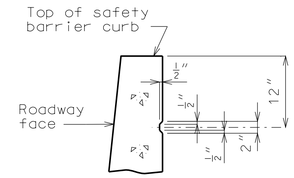

PART SECTION SHOWING RUSTICATION DETAILS

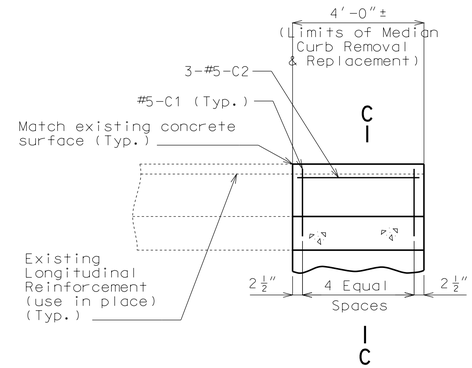

PART ELEVATION OF RAISED MEDIAN CURB

Notes:
Existing conduit attached to right safety barrier curb (not shown) that falls within the area of curb removal shall be protected from damage.

Any damage to the conduit shall be repaired or replaced, at the contractor's expense, as directed by the engineer.

Conduit shall be reattached in removal areas. Cost of reattaching conduit will be considered completely covered by the contract unit price for Remove and Replace Barrier Curb.

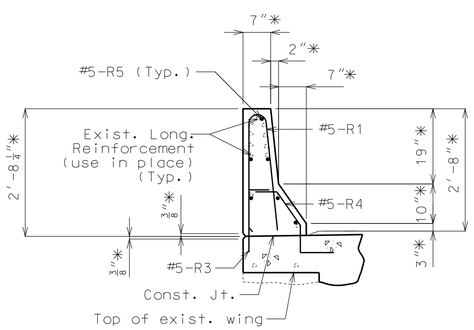

PART SECTION A-A

* Match existing.

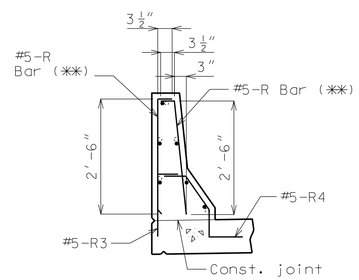

R-BAR PERMISSIBLE ALTERNATE SHAPE

(**) The R1 bar may be separated into two bars as shown, at the contractor's option. (All dimensions are out to out.)

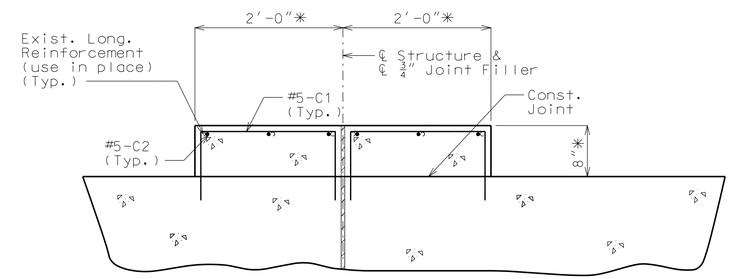

PART SECTION C-C

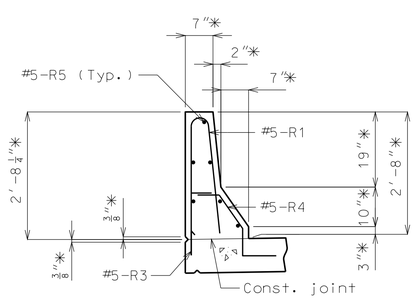

PART SECTION B-B

* Match existing.

Notes:
Concrete in the safety barrier curb and raised median curb shall be Class B-1.

All exposed edges of new curbs shall match existing curbs.

Payment for curb removal and all new concrete and reinforcement for safety barrier curb, complete in place, will be considered completely covered by the contract unit price for Remove and Replace Barrier Curb per linear foot.

Payment for curb removal and all new concrete and reinforcement for raised median barrier curb, complete in place, will be considered completely covered by the contract unit price for Remove and Replace Raised Median Curb per linear foot.

DETAILS OF CURB REPLACEMENT AT END BENT NO. 5

Detailed June 2013
Checked July 2013

Note: This drawing is not to scale. Follow dimensions.

"THIS MEDIA SHOULD NOT BE CONSIDERED A CERTIFIED DOCUMENT."

DATE PREPARED	
10/1/2013	
ROUTE	STATE
I-470	MO
DISTRICT	SHEET NO.
BR	11
COUNTY	
JACKSON	
JOB NO.	
J4P2191	
CONTRACT ID.	
PROJECT NO.	
BRIDGE NO.	
A21211	

DESCRIPTION

DATE

MISSOURI HIGHWAYS AND TRANSPORTATION COMMISSION

105 WEST CAPITOL
JEFFERSON CITY, MO 65102
1-888-ASK-MODOT (1-888-275-6636)

IF A SEAL IS PRESENT ON THIS SHEET IT HAS BEEN ELECTRONICALLY SEALED AND DATED.

BILL OF REINFORCING STEEL

NO. REQ'D.	MARK NO. SIZE	MARK NO. MARK	LOCATION	EPOXY (E)	SHAPE NO.	STIRRUP (S)	SUBSTR. (X)	VARIES (V)	NO. EACH	B FT.	B IN.	C FT.	C IN.	D FT.	D IN.	E FT.	E IN.	F FT.	F IN.	H FT.	H IN.	K FT.	K IN.	NOMINAL LENGTH FT.	NOMINAL LENGTH IN.	ACTUAL LENGTH FT.	ACTUAL LENGTH IN.	WEIGHT LBS.
			END BENT NO.																									
			1 & NO. 5																									
14	6	H10	DIAPHRAGM	E	21	S				2	9.000	3	0.000							2	9.000	2.000		5	9	5	7	117
14	6	H11	DIAPHRAGM	E	15	S				2	7.500	3	0.000							2	7.500	1.875		5	8	5	6	116
50	6	H12	DIAPHRAGM	E	20					25	8.000													25	8	25	8	1928
24	6	H13	DIAPHRAGM	E	20					31	0.000													31	0	31	0	1117
154	5	U10	DIAPHRAGM	E	19	S				4	7.000	3	4.000											7	11	7	10	1258
			BARRIER CURB																									
36	5	R1	BARRIER CURB	E	26					2	6.000		4.250	2	6.125					2	6.000	3.000		5	2	5	2	194
36	5	R3	BARRIER CURB	E	19	S					17.000		6.000											0	23	0	22	69
36	5	R4	BARRIER CURB	E	27	S							6.000		11.125		7.000		12.000		9.125	6.375		3	0	2	10	106
24	5	R5	BARRIER CURB	E	20					3	9.000													3	9	3	9	94
			RAISED																									
			MEDIAN CURB																									
36	5	C1	MED. CURB	E	10	S							12.000		21.000									3	9	3	7	135
12	5	C2	MED. CURB	E	20					3	9.000													3	9	3	9	47
			TOTALS																									
	5			E																								1903
	6			E																								3278
			TOTAL																									0
			TOTAL	E																								5181
			Slab on Girder																									
	5			E																								1258
	6			E																								3278
			TOTAL																									4536
			Safety Barrier Curb																									
	5			E																								645
			TOTAL																									645

BILL OF REINFORCING STEEL

NO. REQ'D.	MARK NO. SIZE	MARK NO. MARK	LOCATION	EPOXY (E)	SHAPE NO.	STIRRUP (S)	SUBSTR. (X)	VARIES (V)	NO. EACH	B FT.	B IN.	C FT.	C IN.	D FT.	D IN.	E FT.	E IN.	F FT.	F IN.	H FT.	H IN.	K FT.	K IN.	NOMINAL LENGTH FT.	NOMINAL LENGTH IN.	ACTUAL LENGTH FT.	ACTUAL LENGTH IN.	WEIGHT LBS.

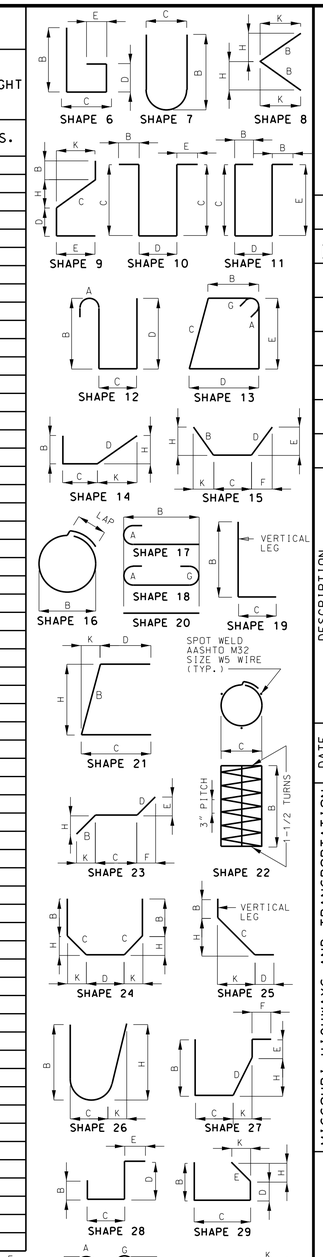

BENDING DIAGRAMS

"THIS MEDIA SHOULD NOT BE CONSIDERED A CERTIFIED DOCUMENT."

DATE PREPARED: 10/1/2013

ROUTE	STATE
I-470	MO

DISTRICT	SHEET NO.
BR	12

COUNTY: JACKSON

JOB NO.: J4P2191

CONTRACT ID.

PROJECT NO.

BRIDGE NO.: A21211

DESCRIPTION	DATE

MISSOURI HIGHWAYS AND TRANSPORTATION COMMISSION

105 WEST CAPITOL
JEFFERSON CITY, MO 65102
1-888-ASK-MODOT (1-888-275-6636)

IF A SEAL IS PRESENT ON THIS SHEET IT HAS BEEN ELECTRONICALLY SEALED AND DATED.

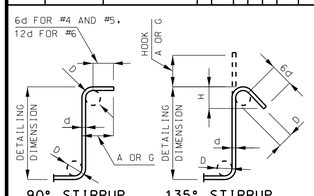

STIRRUP HOOK DIMENSIONS				
GRADES 40 - 50 - 60 KSI				
BAR SIZE	D (IN.)	90° HOOK	135° HOOK	
		HOOK A OR G	HOOK A OR G	APPROX. H
#4	2"	4 1/2"	4 1/2"	3"
#5	2 1/2"	6"	5 1/2"	3 3/4"
#6	4 1/2"	12"	8"	4 1/2"

NOTE: UNLESS OTHERWISE NOTED DIAMETER "D" IS THE SAME FOR ALL BENDS AND HOOKS ON A BAR.

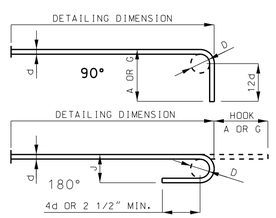

END HOOK DIMENSIONS				
BAR SIZE	D (IN.)	ALL GRADES		
		180° HOOKS		90° HOOKS
		A OR G	J	A OR G
#3	2 1/4"	5"	3"	6"
#4	3"	6"	4"	8"
#5	3 3/4"	7"	5"	10"
#6	4 1/2"	8"	6"	12"
#7	5 1/4"	10"	7"	14"
#8	6"	11"	8"	16"
#9	9 1/2"	15"	11 3/4"	19"
#10	10 3/4"	17"	13 1/4"	22"
#11	12"	19"	14 3/4"	2'-0"
#14	18 1/4"	2'-3"	21 3/4"	2'-7"

TWO ADDITIONAL #6-H12 ARE INCLUDED IN THE BAR BILL FOR TESTING.

NOTE:
ALL STANDARD HOOKS AND BENDS OTHER THAN 180 DEGREE ARE TO BE BENT WITH SAME PROCEDURE AS FOR 90 DEGREE STANDARD HOOKS.
HOOKS AND BENDS SHALL BE IN ACCORDANCE WITH THE PROCEDURES AS SHOWN ON THIS SHEET.
E = EPOXY COATED REINFORCEMENT.
S = STIRRUP.
X = BAR IS INCLUDED IN SUBSTRUCTURE QUANTITIES.
V = BAR DIMENSIONS VARY IN EQUAL INCREMENTS BETWEEN DIMENSIONS SHOWN ON THIS LINE AND THE FOLLOWING LINE.
NO. EA. = NUMBER OF BARS OF EACH LENGTH.
NOMINAL LENGTHS ARE BASED ON OUT TO OUT DIMENSIONS SHOWN IN BENDING DIAGRAMS AND ARE LISTED FOR FABRICATORS USE. (NEAREST INCH)
ACTUAL LENGTHS ARE MEASURED ALONG CENTERLINE BAR TO THE NEAREST INCH.
PAYWEIGHTS ARE BASED ON ACTUAL LENGTHS.
FOUR ANGLE OR CHANNEL SPACERS ARE REQUIRED FOR EACH COLUMN SPIRAL. SPACERS ARE TO BE PLACED ON INSIDE OF SPIRALS. LENGTH AND WEIGHT OF COLUMN SPIRALS DO NOT INCLUDE SPLICES OR SPACERS.
REINFORCING STEEL (GRADE 60) FY = 60,000 PSI.

Detailed Aug. 2013
Checked Aug. 2013

Note: This drawing is not to scale. Follow dimensions.

MISSOURI HIGHWAYS AND TRANSPORTATION COMMISSION

SEC/SUR 1 TWP 47N RGE 32W

U.I.P. AND REHABILITATE EXISTING (52'-67'-68'-63'-35') CONTINUOUS COMPOSITE WIDE FLANGE SPANS (SKEW 30° R.A.)

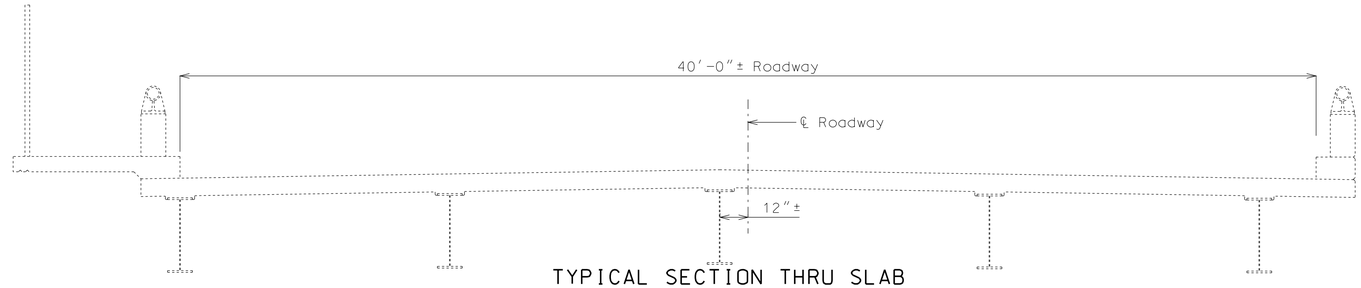

TYPICAL SECTION THRU SLAB

GENERAL NOTES:

Design Specifications:

2002 - AASHTO LFD (17th Edition) Standard Specifications
Bridge Deck Rating = 6

Design Loading:

H20-44 (1973 & New Construction)

Design Unit Stresses:

Class B-1 Concrete (Slab, Curb & Parapet) f'c = 4,000 psi

Reinforcing Steel (Grade 60) fy = 60,000 psi

Reinforcing Steel:

Minimum clearance to reinforcing steel shall be 1½", unless otherwise shown.

Expansion Joints:

The concrete for slab, curb and parapet replacement shall be Class B-1.

Payment for backwall and slab concrete, complete-in-place, for expansion joint replacement will be considered completely covered by the contract unit price for Class B-1 concrete per cu. yard.

Payment for furnishing and installing slab reinforcing steel and backwall reinforcing steel, complete-in-place, for expansion joint replacement will be considered completely covered by the contract unit price for Reinforcing Steel (Bridges).

Concrete Protective Coatings:

Protective coating for concrete bents and piers (Urethane) shall be applied as shown on plans and in accordance with Sec 711.

Exsiting Bearings Protective Coatings:

Protective Coating: Existing bearings at End Bent No. 1 & 6 with System G in accordance with Sec 1081.

The cost of cleaning and coating of existing bearings shall be considered completely covered by the contract unit price for Cleaning and Coating Existing Bearing per each.

Miscellaneous:

Bars bonded in old concrete not removed shall be cleanly stripped and embedded into new concrete where possible. If length is available, old bars shall extend into new concrete at least 40 diameters for smooth bars and 30 diameters for deformed bars, unless otherwise noted.

Outline of old work is indicated by light dashed lines. Heavy lines indicate new work.

Contractor shall verify all dimensions in field before ordering new material.

The area exposed by the removal of concrete and not covered with new concrete shall be coated with an approved qualified special mortar in accordance with Sec 704.

The existing skid plates on the sidewalk shall be reinstalled with ⅜"Ø diameter counter sunk cone expansion anchors and they shall have a minimum ultimate pullout strength of 3900 lbs. in concrete with f'c= 4,000 psi.

Traffic Handling:

Bridge A24461 will be closed to traffic during construction. See Roadway Plans for Traffic Control.

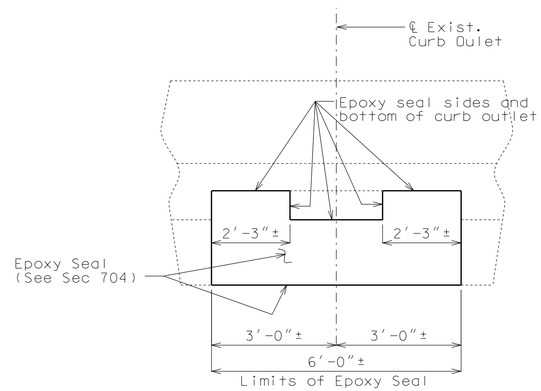

TYPICAL ELEVATION OF EXISTING CURB OUTLET SHOWING LIMITS OF EPOXY SEAL

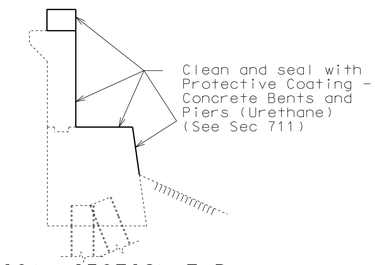

TYPICAL SECTION THRU END BENTS NO. 1 & 6 SHOWING PROTECTIVE COATING

Note: Cleaning and coating of existing bearings shall be done prior to installation of expansion device and new concrete.

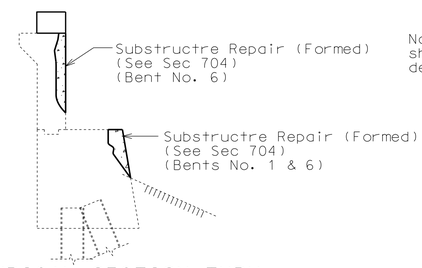

TYPICAL SECTION THRU END BENTS NO. 1 & 6 SHOWING SUBSTRUCTURE REPAIR

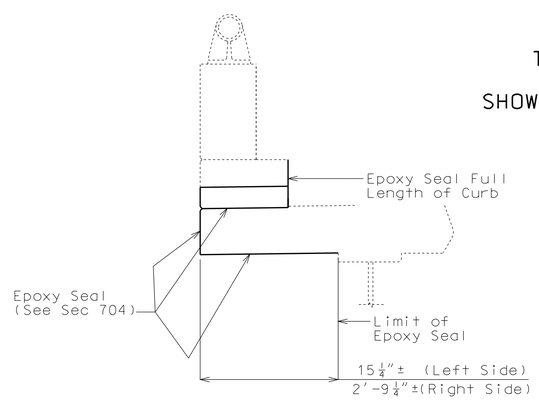

TYPICAL SECTION THRU CURB OUTLET SHOWING LIMITS OF EPOXY SEAL

Estimated Quantities

Item		Total
Removal of Existing Expansion Joints & Adjacent Concrete	linear foot	92
Remove and Replace Curb & Parapet	linear foot	18
Class B-1 Concrete	cu. yard	11.2
Substructure Repair (Formed)	sq. foot	30
Clean and Epoxy Seal	sq. foot	452
Reinforcing Steel (Bridges)	pound	940
Protective Coating - Concrete Bents & Piers (Urethane)	lump sum	1
Cleaning and Coating Existing Bearings	each	10
Strip Seal Expansion Joint System	linear foot	92

REPAIRS TO BRIDGE: O'BRIEN RD. OVER RTE. 50

STATE ROAD FROM RTE. 7 TO RTE. 291

ABOUT 0.5 MILE SOUTHEAST OF RTE. 291

STA. 596+30.00±(MATCH EXISTING)

STD. 606.22

STD. 706.35

Detailed Nov. 2013
Checked Dec. 2013

Note: This drawing is not to scale. Follow dimensions.

"THIS MEDIA SHOULD NOT BE CONSIDERED A CERTIFIED DOCUMENT."

DATE PREPARED	
1/16/2014	
ROUTE 50	STATE MO
DISTRICT BR	SHEET NO. 1
COUNTY JACKSON	
JOB NO. J4P2191	
CONTRACT ID.	
PROJECT NO.	
BRIDGE NO. A24461	

DESCRIPTION

DATE

MISSOURI HIGHWAYS AND TRANSPORTATION COMMISSION

105 WEST CAPITOL
JEFFERSON CITY, MO 65102
1-888-ASK-MODOT (1-888-275-6636)

IF A SEAL IS PRESENT ON THIS SHEET IT HAS BEEN ELECTRONICALLY SEALED AND DATED.

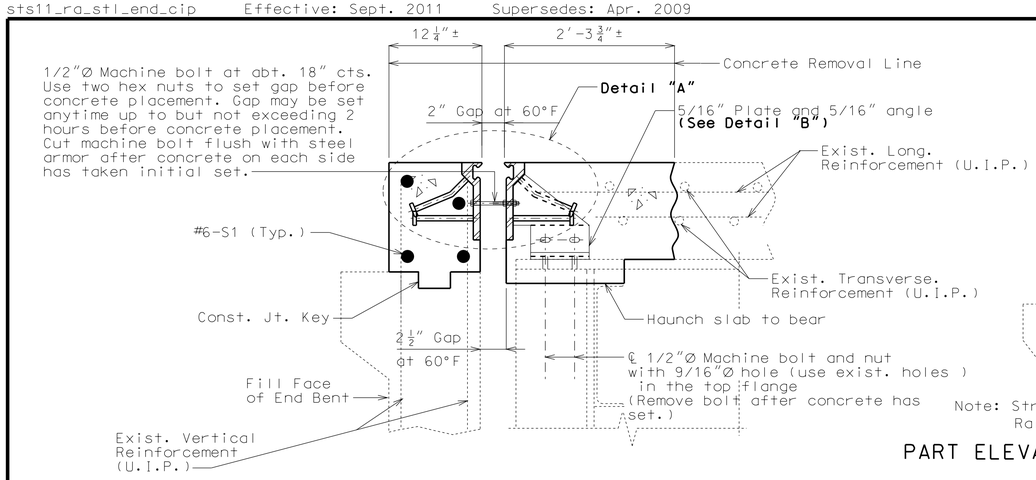

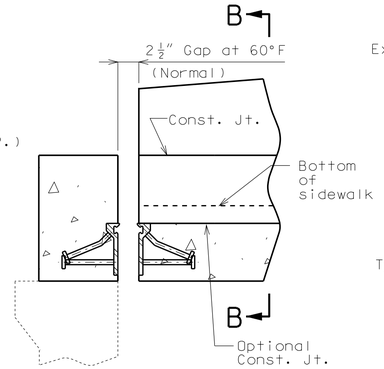

Note: Strip seal gland not shown for clarity.
Rail post not shown for clarity.

PART ELEVATION OF LEFT CURB & PARAPET

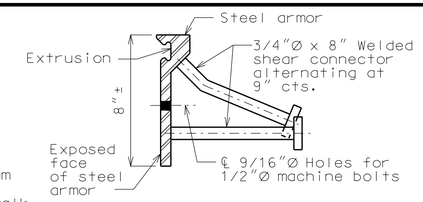

DETAIL OF JOINT ARMOR

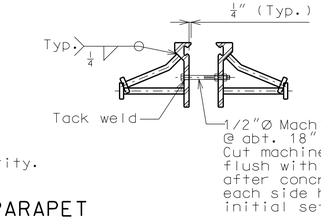

DETAIL "A"

GENERAL NOTES:

Expansion joint system shall be fabricated in one section, except for stage construction and when the length is over 50 feet. A complete joint penetration groove welded splice shall be required. Welds shall be ground flush to provide a smooth surface. The expansion joint system shall be fabricated and installed to the crown and grade of the roadway.

The strip seal gland shall be installed in joints in one continuous piece without field splices. Factory splicing will be permitted for joints in excess of 53 feet.

Structural steel for the expansion joint system shall be ASTM A709 Grade 36 except the steel armor may be ASTM A709 Grade 50W. Anchors for the expansion joint system shall be in accordance with Sec 1037. Strip seal expansion joint system shall be in accordance with Sec 717.

Structural steel for the expansion joint system shall be coated with a minimum of two coats of inorganic zinc primer (5 mils minimum) or galvanized in accordance with ASTM A123. Anchors need not be protected from overspray.

Plan dimensions are based on installation at 60°F. The expansion gap and other dimensions shall be increased or decreased 1/8" for each 10° fall or rise in temperature at installation.

New longitudinal reinforcing steel shall be placed and existing longitudinal reinforcing steel shall be cut/bent so that ends shall not be more than ±1" from vertical leg of the steel armor at the expansion joint system.

Concrete shall be forced under and around steel armor and anchors. Proper consolidation of the concrete shall be achieved by localized internal vibration.

For details of post and plate for bridge anchor section, see Sheet No. 4.

Cost of fabricating and reinstalling existing skid plates with 3/8"Ø cone expansion anchors will be considered incidental to other pay items.

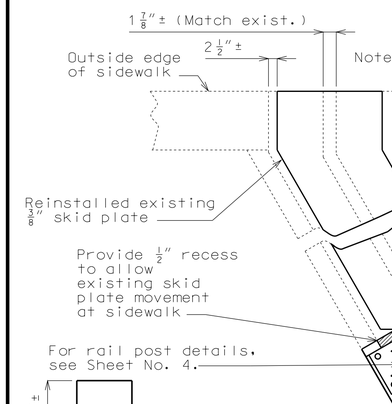

SECTION A-A

Note: Strip seal gland not shown for clarity.

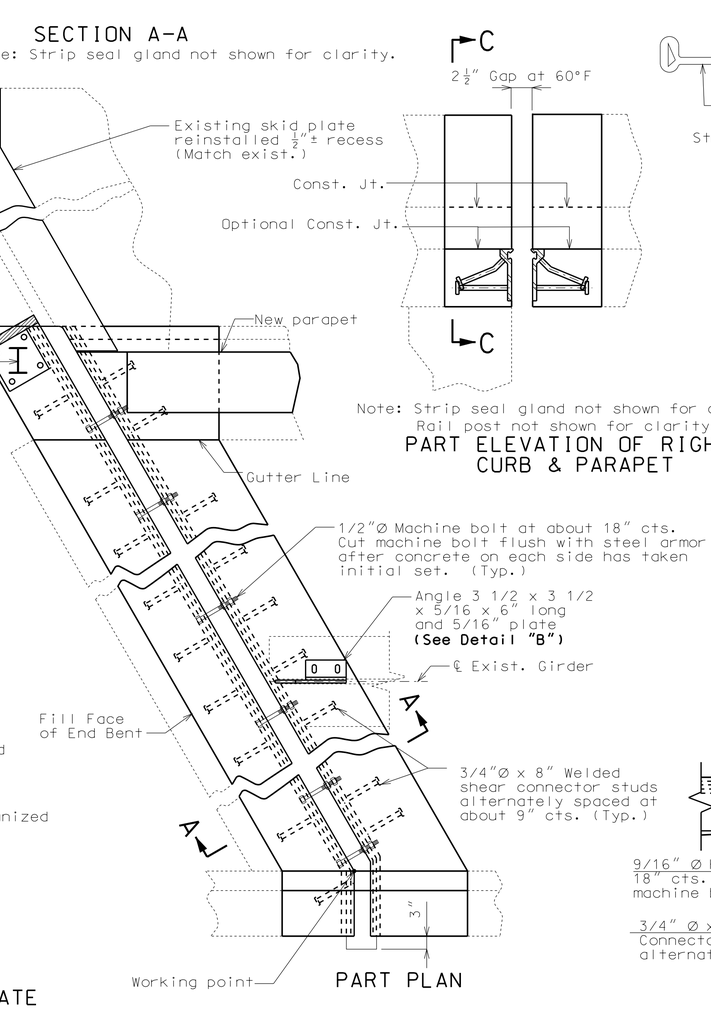

PART PLAN

Note: Strip seal gland not shown for clarity.
Rail post not shown for clarity.

PART ELEVATION OF RIGHT CURB & PARAPET

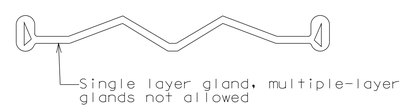

DETAIL OF GLAND

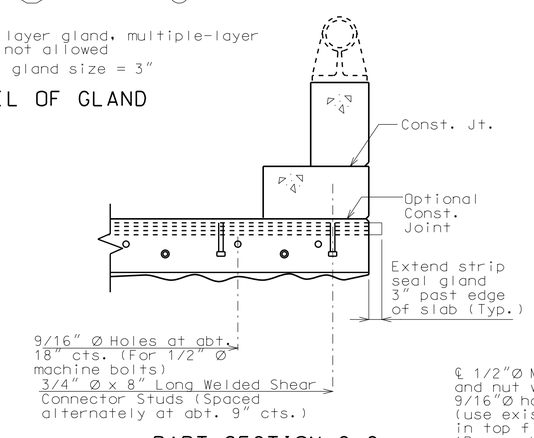

PART SECTION C-C

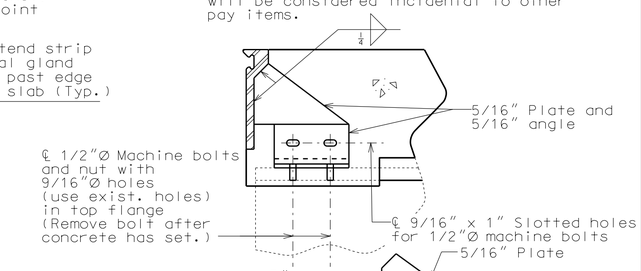

DETAIL "B"

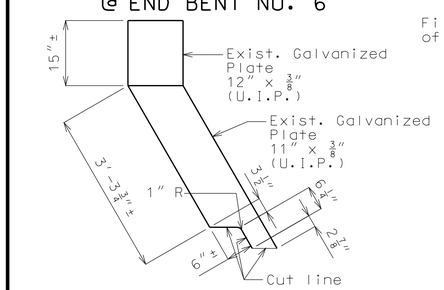

PLAN OF LEFT SKID PLATE SHOWING DIMENSIONS @ END BENT NO. 6

PLAN OF LEFT SKID PLATE SHOWING DIMENSIONS @ END BENT NO. 1

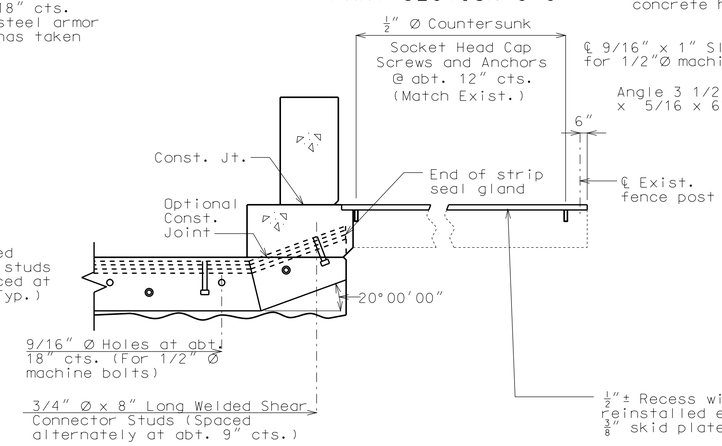

PART SECTION B-B

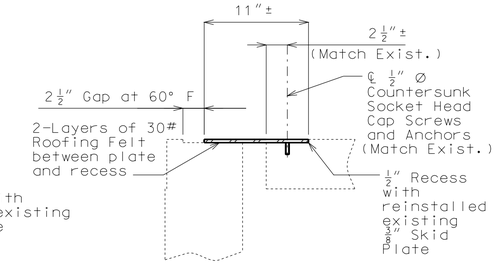

PART SECTION OF SIDEWALK SHOWING RAISED PLATE

DETAILS OF STRIP SEAL AT END BENTS NO. 1 & 6

(End Bent No. 1 shown. End Bent No. 6 similar)

Detailed Dec. 2013
Checked Dec. 2013

Note: This drawing is not to scale. Follow dimensions.

"THIS MEDIA SHOULD NOT BE CONSIDERED A CERTIFIED DOCUMENT."

DATE PREPARED	
1/16/2014	
ROUTE 50	STATE MO
DISTRICT BR	SHEET NO. 2
COUNTY JACKSON	
JOB NO. J4P2191	
CONTRACT ID.	
PROJECT NO.	
BRIDGE NO. A24461	

DATE	DESCRIPTION

IF A SEAL IS PRESENT ON THIS SHEET IT HAS BEEN ELECTRONICALLY SEALED AND DATED.

MISSOURI HIGHWAYS AND TRANSPORTATION COMMISSION
105 WEST CAPITOL
JEFFERSON CITY, MO 65102
1-888-ASK-MODOT (1-888-275-6636)

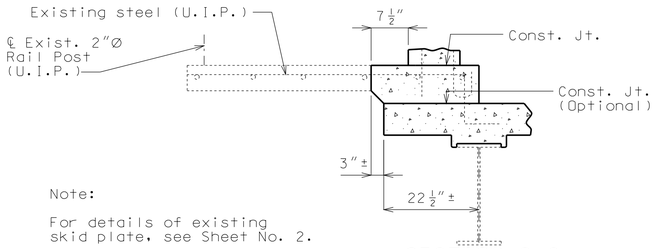

Note:

For details of existing skid plate, see Sheet No. 2.

SECTION C-C

Note: Slab steel not shown for clarity.

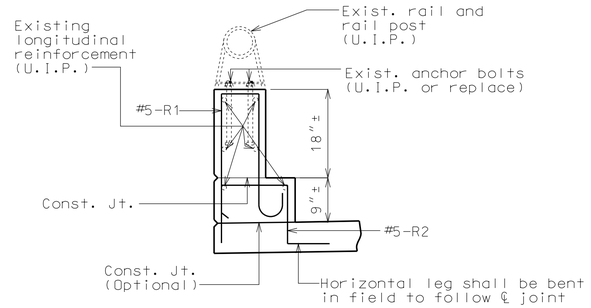

SECTION B-B

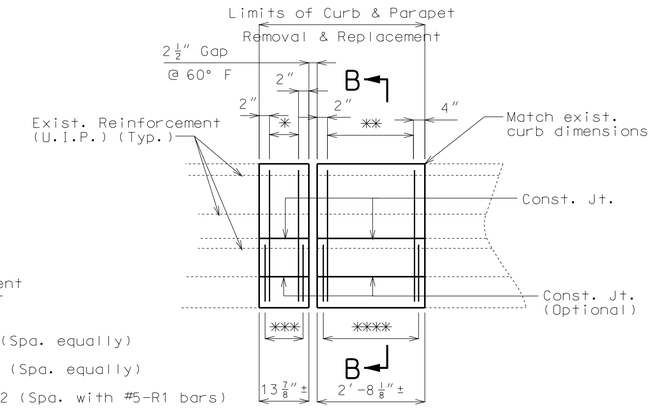

✱ 2-#5-R1 (Spa. equally)

✱✱ 3-#5-R1 (Spa. equally)

✱✱✱ 2-#5-R2 (Spa. with #5-R1 bars)

✱✱✱✱ 3-#5-R1 (Spa. with #5-R1 bars)

PART ELEVATION RIGHT SIDE SHOWING CURB & PARAPET REINFORCEMENT

(Right side End Bent No. 1 shown, right side End Bent No. 6 similar)

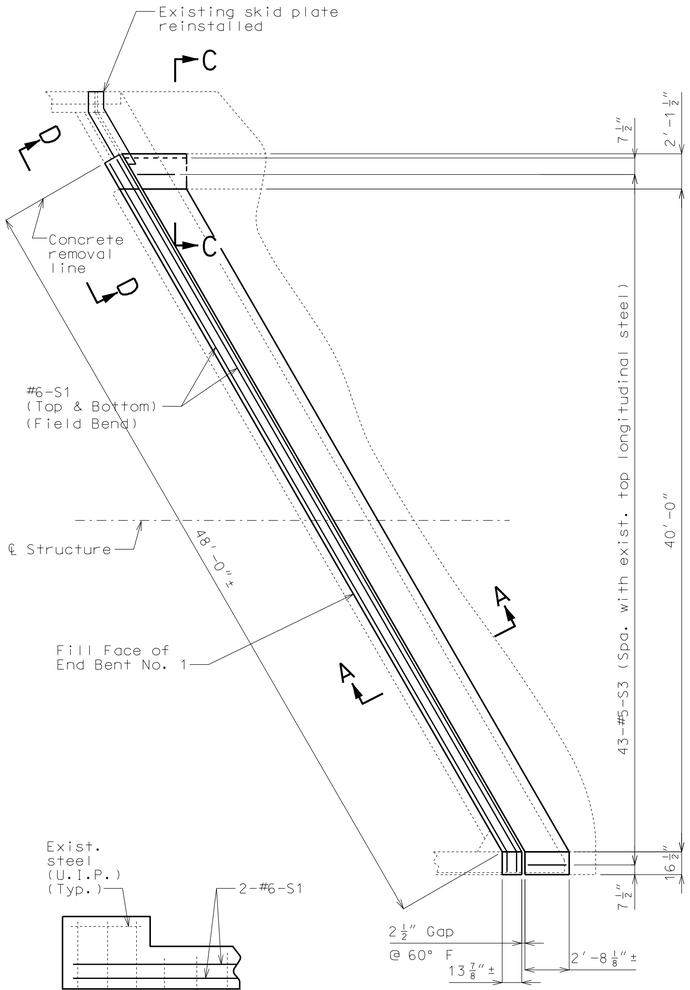

PART PLAN OF SLAB @ END BENT NO. 1

Note: Existing reinforcement (U.I.P.) not shown for clarity.

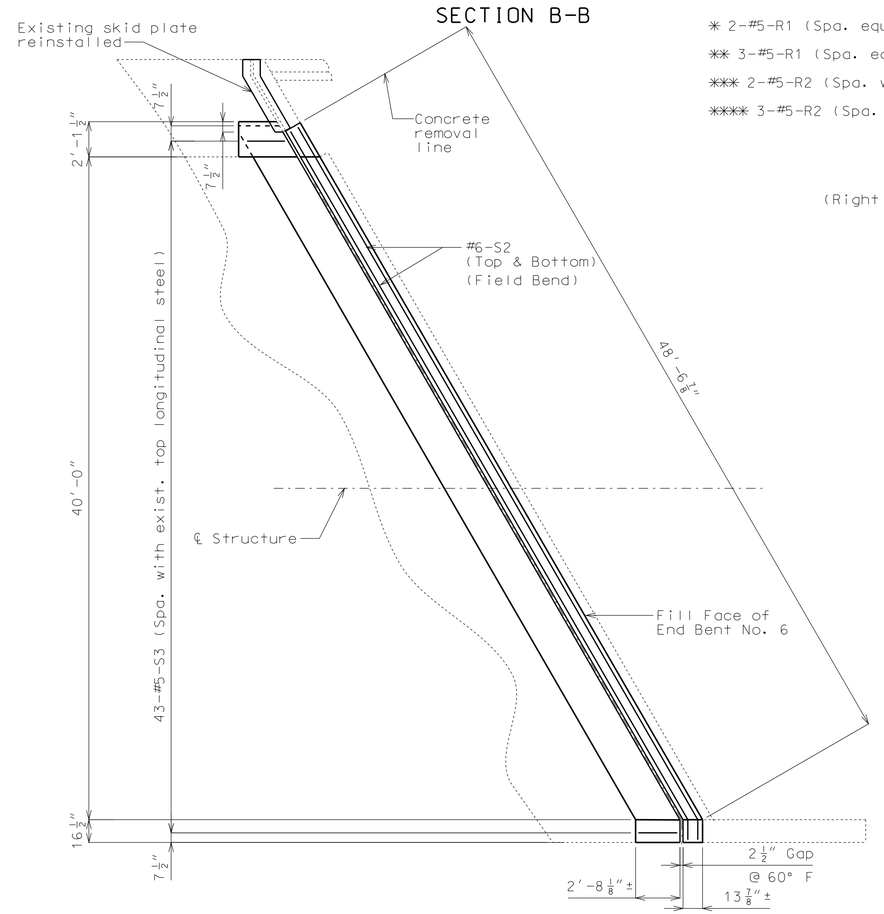

PART PLAN OF SLAB @ END BENT NO. 6

Note: Existing reinforcement (U.I.P.) not shown for clarity.

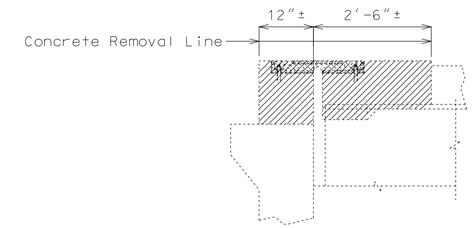

PART SECTION THRU END BENT SHOWING REMOVAL

(End bent No. 1 shown, End Bent No. 6 similar)

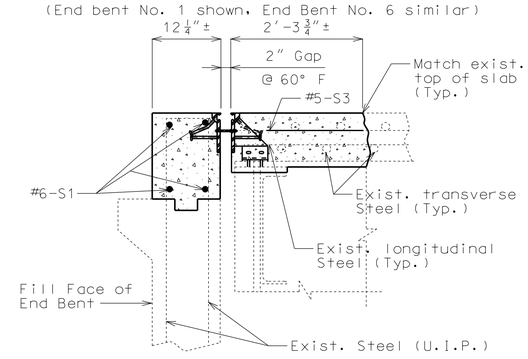

SECTION A-A

(End bent No. 1 shown, End Bent No. 6 similar)

PART ELEVATION D-D SHOWING REINFORCEMENT

(End Bent No. 1 shown, End Bent No. 6 similar)

Notes:

Remove existing stirrups within limits of curb & parapet removal.

All exposed edges of new curb & parapet shall match existing curb & parapet.

Payment for curb removal and all new concrete and reinforcement for curb & parapet, complete-in-place, will be considered completely covered by the contract unit price for Remove and Replace Curb & Parapet per linear foot.

Existing rail posts located within limits of curb and parapet removal shall be reattached to the new curb. Contractor may clean and reuse existing anchor bolts as approved by the engineer or replace the anchor bolts in-kind. Cost of rail post reattachement will be considered completely covered by the contract unit price for Class B-1 Concrete.

Detailed Dec. 2013
Checked Dec. 2013

Note: This drawing is not to scale. Follow dimensions.

"THIS MEDIA SHOULD NOT BE CONSIDERED A CERTIFIED DOCUMENT."

DATE PREPARED	
1/16/2014	
ROUTE	STATE
50	MO
DISTRICT	SHEET NO.
BR	3
COUNTY	
JACKSON	
JOB NO.	
J4P2191	
CONTRACT ID.	
PROJECT NO.	
BRIDGE NO.	
A24461	

DATE	DESCRIPTION

MISSOURI HIGHWAYS AND TRANSPORTATION COMMISSION
105 WEST CAPITOL
JEFFERSON CITY, MO 65102
1-888-ASK-MODOT (1-888-275-6636)

IF A SEAL IS PRESENT ON THIS SHEET IT HAS BEEN ELECTRONICALLY SEALED AND DATED.

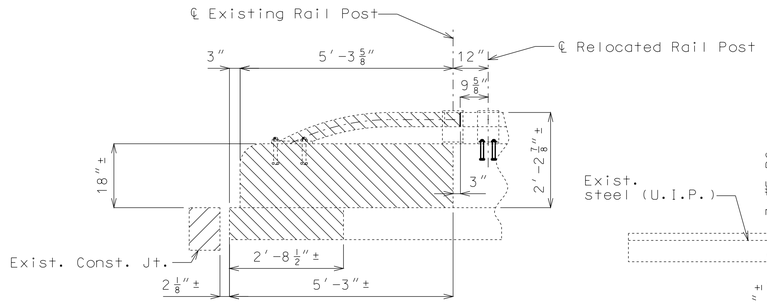

PART ELEVATION OF LEFT CURB & PARAPET SHOWING REMOVAL

Note: Existing rail post anchor bolts shall be cut off flush.

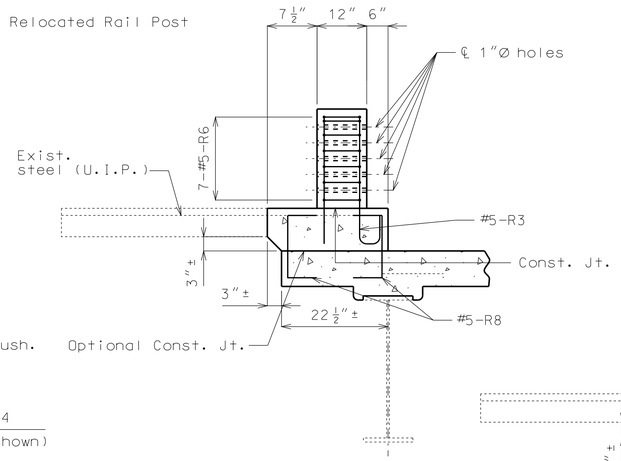

SECTION B-B

Note:

For details of existing 3/8" skid plate at End Bent No. 1, see Sheet No. 2.

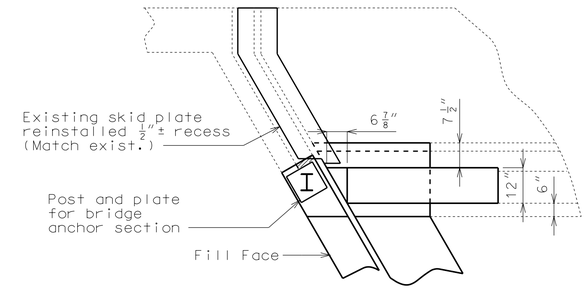

PART PLAN OF LEFT CURB & PARAPET AT END BENT NO. 1

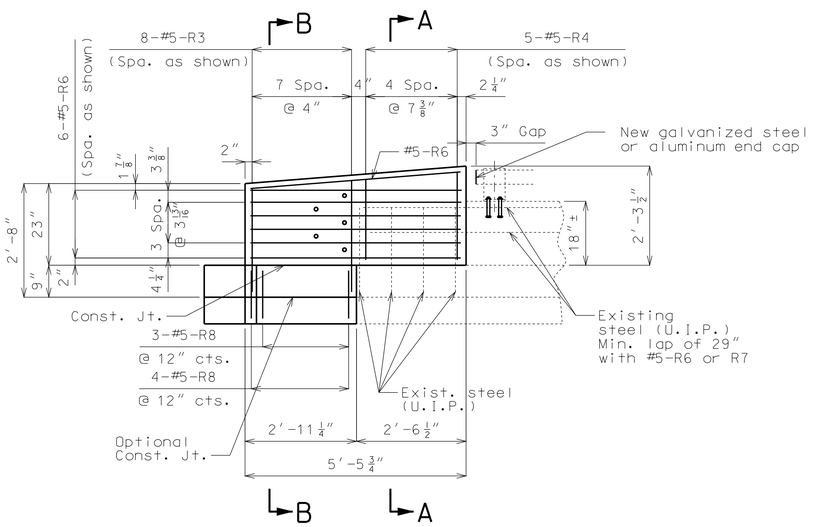

PART ELEVATION OF LEFT CURB & PARAPET SHOWING REINFORCEMENT AND DIMENSIONS

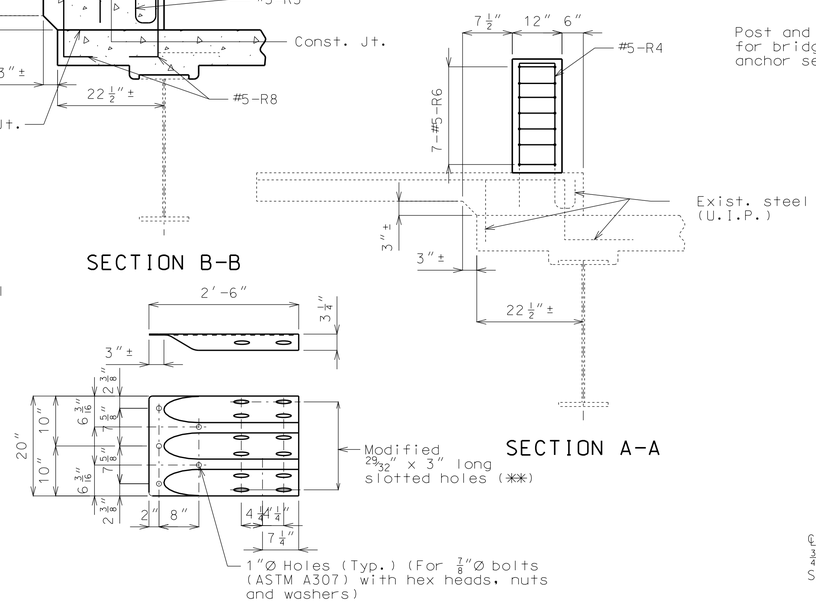

SECTION A-A

✱✱ Tighten bolts, back off 1/2 turn and burr threads

✱✱ Allow for sliding between Modified Bridge Anchor Section (Thrie Beam) and Safety Barrier Curb

MODIFIED TERMINAL CONNECTION AT END BENTS NO. 1 & 6 (ROADWAY ITEM)

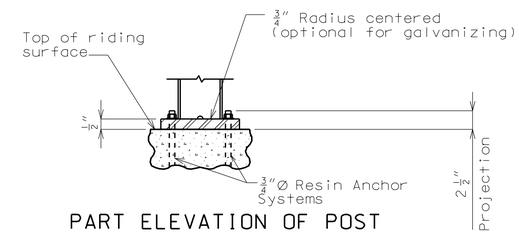

PART ELEVATION OF POST

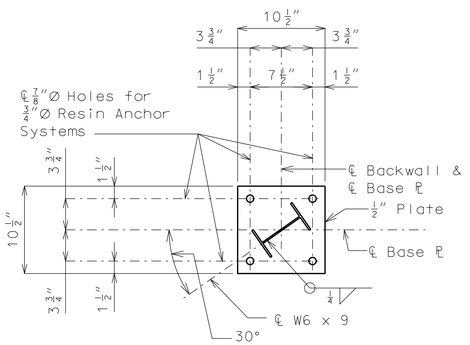

DETAIL OF BASE PLATE

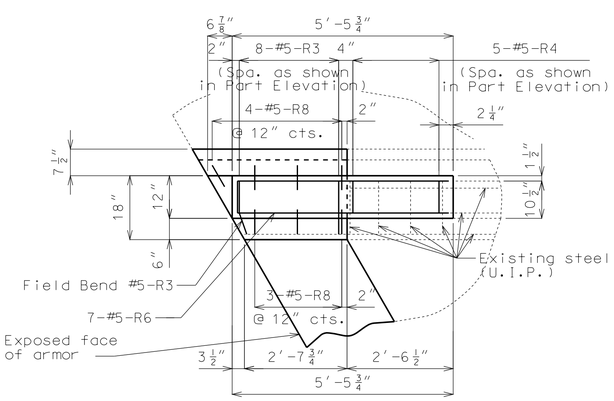

PART PLAN OF CURB & PARAPET SHOWING REINFORCEMENT AND DIMENSIONS

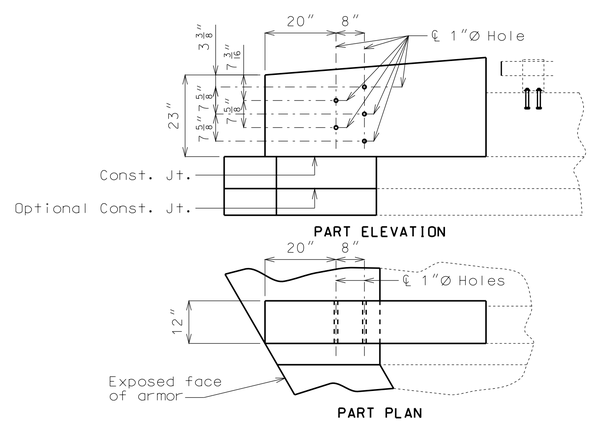

DETAIL OF GUARD RAIL ATTACHMENT

Notes:

Fabricated structural steel shall be ASTM A709 Grade 36.

For protective coating and material requirements, see Sec 1040.

The contractor shall use one of the qualified resin anchor systems in accordance with Sec 1039.

Cost of furnishing and installing the resin anchor system, complete-in-place, will be considered completely covered by the contract unit price for the Bridge Anchor Section (Roadway Item).

The minimum embedment depth in concrete with f'c = 4,000 psi for the resin anchor system shall be that required to meet the minimum ultimate pullout strength in accordance with Sec 1039 but shall not be less than 5".

Modified terminal connection and base plate with post will be considered completely covered by the contract unit price for the Bridge Anchor Section (Roadway Item).

DETAILS SHOWING REMOVAL AND REPLACEMENT OF LEFT CURB & PARAPET @ END BENT NO. 1

Detailed Dec. 2013
Checked Dec. 2013

Note: This drawing is not to scale. Follow dimensions.

"THIS MEDIA SHOULD NOT BE CONSIDERED A CERTIFIED DOCUMENT."

DATE PREPARED	
1/16/2014	
ROUTE 50	STATE MO
DISTRICT BR	SHEET NO. 4
COUNTY JACKSON	
JOB NO. J4P2191	
CONTRACT ID.	
PROJECT NO.	
BRIDGE NO. A24461	

DATE	DESCRIPTION

MISSOURI HIGHWAYS AND TRANSPORTATION COMMISSION
105 WEST CAPITOL
JEFFERSON CITY, MO 65102
1-888-ASK-MODOT (1-888-275-6636)

IF A SEAL IS PRESENT ON THIS SHEET IT HAS BEEN ELECTRONICALLY SEALED AND DATED.

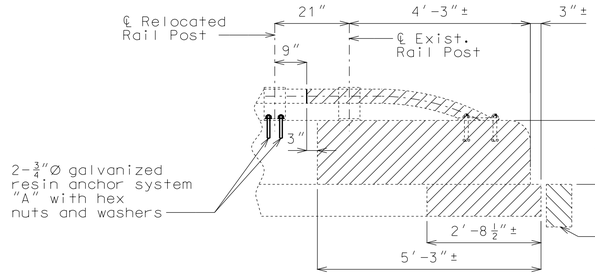

PART ELEVATION OF LEFT CURB & PARAPET SHOWING REMOVAL @ END BENT NO. 6

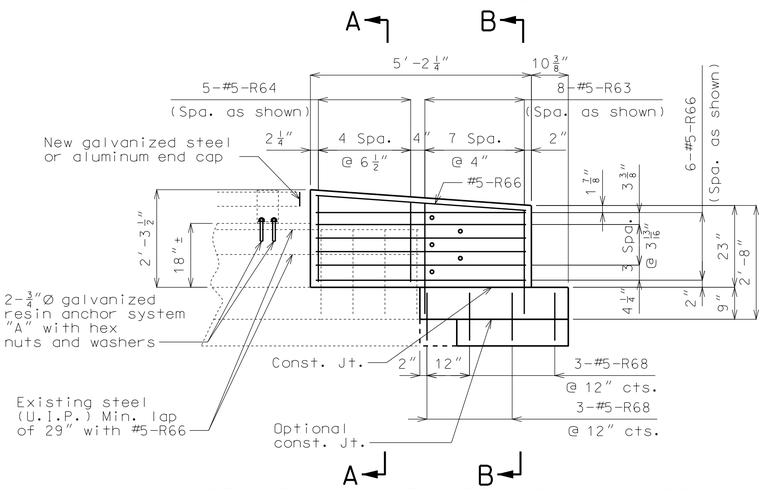

PART ELEVATION OF LEFT CURB & PARAPET SHOWING REINFORCEMENT AND DIMENSIONS @ END BENT NO. 6

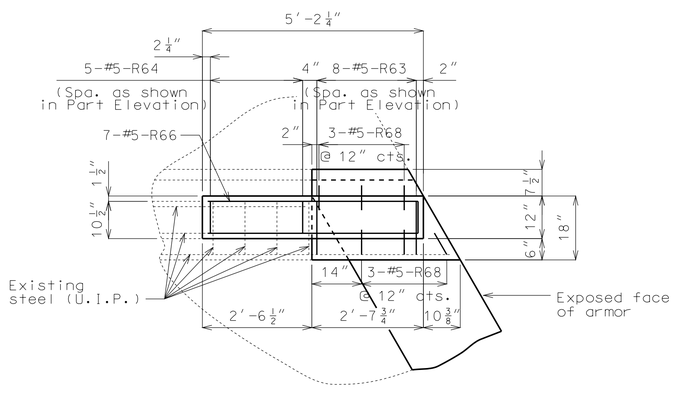

PART PLAN OF CURB & PARAPET SHOWING REINFORCEMENT AND DIMENSIONS

Note:

Modified terminal connection and base plate with post will be considered completely covered by the contract unit price for the Bridge Anchor Section (Roadway Item).

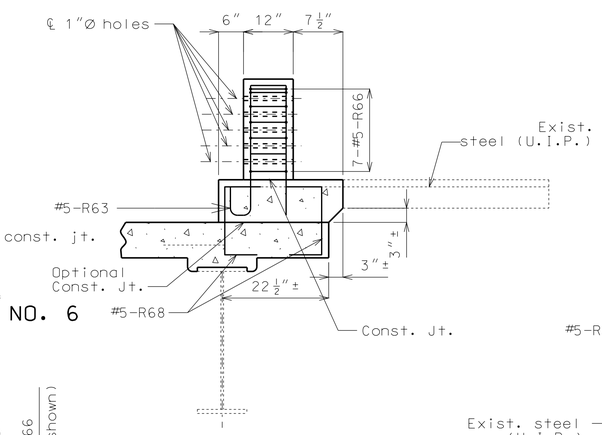

SECTION B-B

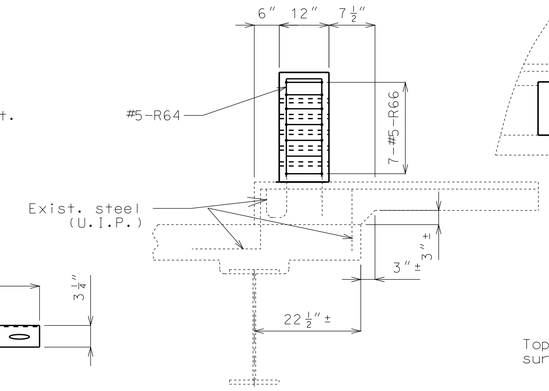

SECTION A-A

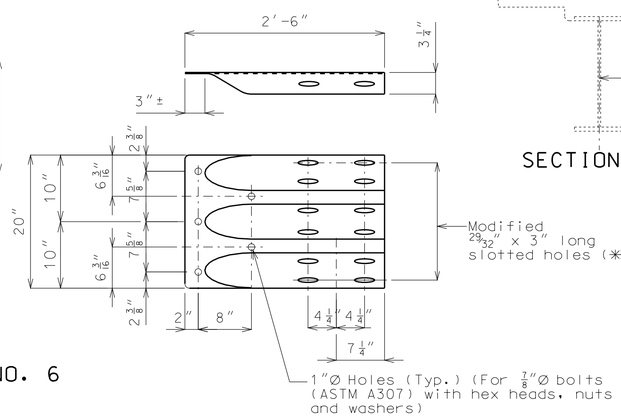

✱✱ Tighten bolts, back off ½ turn and burr threads

✱✱ Allow for sliding between Modified Bridge Anchor Section (Thrie Beam) and Safety Barrier Curb

MODIFIED TERMINAL CONNECTION AT END BENTS NO. 1 & 6 (ROADWAY ITEM)

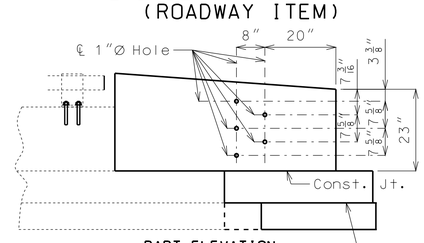

PART ELEVATION

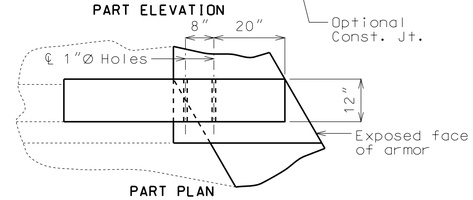

PART PLAN

DETAIL OF GUARD RAIL ATTACHMENT

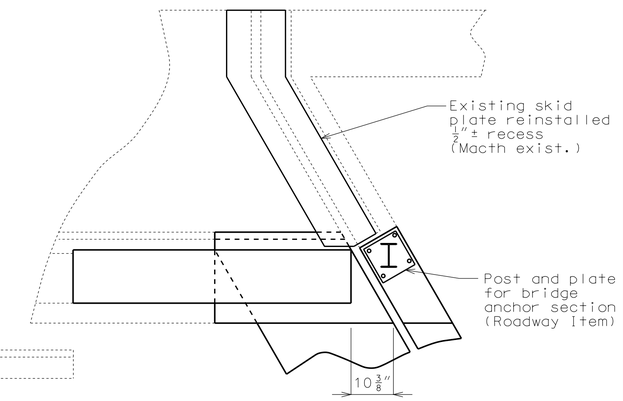

PART PLAN OF CURB & PARAPET AT END BENT NO. 6

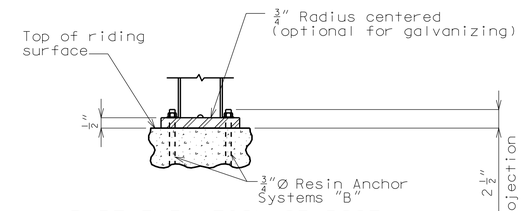

PART ELEVATION OF POST

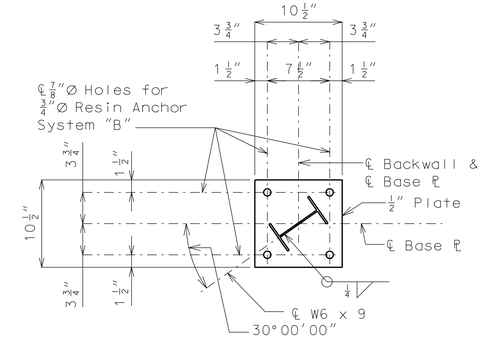

DETAIL OF BASE PLATE

Notes:

Fabricated structural steel shall be ASTM A709 Grade 36.

For protective coating and material requirements, see Sec 1040.

The contractor shall use one of the qualified resin anchor systems in accordance with Sec 1039.

Cost of furnishing and installing the resin anchor system "A", complete-in-place, will be considered completely covered by the contract unit price for the Remove and Replace Curb & Parapet.

Cost of furnishing and installing the resin anchor system "B", complete-in-place, will be considered completely covered by the contract unit price for the Bridge Anchor Section (Roadway Item).

The minimum embedment depth in concrete with f'c = 4,000 psi for the resin anchor system shall be that required to meet the minimum ultimate pullout strength in accordance with Sec 1039 but shall not be less than 5".

DETAILS SHOWING REMOVAL AND REPLACEMENT OF LEFT CURB & PARAPET @ END BENT NO. 6

Detailed Dec. 2013
Checked Dec. 2013

Note: This drawing is not to scale. Follow dimensions.

"THIS MEDIA SHOULD NOT BE CONSIDERED A CERTIFIED DOCUMENT."

DATE PREPARED	
1/16/2014	
ROUTE 50	STATE MO
DISTRICT BR	SHEET NO. 5
COUNTY JACKSON	
JOB NO. J4P2191	
CONTRACT ID.	
PROJECT NO.	
BRIDGE NO. A24461	

DATE	DESCRIPTION

IF A SEAL IS PRESENT ON THIS SHEET IT HAS BEEN ELECTRONICALLY SEALED AND DATED.

MISSOURI HIGHWAYS AND TRANSPORTATION COMMISSION
105 WEST CAPITOL
JEFFERSON CITY, MO 65102
1-888-ASK-MODOT (1-888-275-6636)

BILL OF REINFORCING STEEL

NO. REQ'D.	MARK NO. SIZE	MARK NO. MARK	LOCATION	EPOXY (E)	SHAPE NO.	STIRRUP (S)	SUBSTR. (X)	VARIES (V)	NO. EACH	B FT. IN.	C FT. IN.	D FT. IN.	E FT. IN.	F FT. IN.	H FT. IN.	K FT. IN.	NOMINAL LENGTH FT. IN.	ACTUAL LENGTH FT. IN.	WEIGHT LBS.
			SLAB																
6	6	S1	SLAB		20					49 1.000							49 1	49 1	442
4	6	S2	SLAB		20					49 8.000							49 8	49 8	298
86	5	S3	SLAB		20					2 3.000							2 3	2 3	202
			CURB/PARAPET																
10	5	R1	CURB/PARAPET		12					2 0.000	7.000	2 0.000					5 2	4 11	51
10	5	R2	CURB/PARAPET		10	S					12.750	13.500	12.000				4 3	3 11	41
8	5	R3	CURB/PARAPET		12			V	1	2 5.000	9.000	2 5.000					6 2	5 11	
			INCREMENT =							2 7.000	9.000	2 7.000					6 6	6 3	51
			0.625 INCH																
5	5	R4	CURB/PARAPET		10	S		V	1		23.000	9.000					4 7	4 5	
			INCREMENT =								2 0.000	9.000					4 9	4 7	23
			0.500 INCH																
7	5	R6	CURB/PARAPET		10	S					4 11.000	7.750					10 6	10 3	75
7	5	R8	CURB/PARAPET		10	S					7.000	12.500					2 3	2 0	15
8	5	R63	CURB/PARAPET		12			V	1	2 5.000	9.000	2 5.000					6 2	5 11	
			INCREMENT =							2 7.000	9.000	2 7.000					6 6	6 3	51
			0.625 INCH																
5	5	R64	CURB/PARAPET		10	S		V	1		23.000	9.000					4 7	4 5	
			INCREMENT =								2 0.000	9.000					4 9	4 7	23
			0.500 INCH																
7	5	R66	CURB/PARAPET		10	S					5 2.000	7.750					11 0	10 9	78
6	5	R68	CURB/PARAPET		10	S					7.000	12.500					2 3	2 0	13
			TOTALS																
	5																		623
	6																		740
			TOTAL																1363
			TOTAL	E															0
			Slab on Girder																
	5																		623
	6																		740
			TOTAL																1363

BILL OF REINFORCING STEEL

NO. REQ'D.	MARK NO. SIZE	MARK NO. MARK	LOCATION	EPOXY (E)	SHAPE NO.	STIRRUP (S)	SUBSTR. (X)	VARIES (V)	NO. EACH	B FT. IN.	C FT. IN.	D FT. IN.	E FT. IN.	F FT. IN.	H FT. IN.	K FT. IN.	NOMINAL LENGTH FT. IN.	ACTUAL LENGTH FT. IN.	WEIGHT LBS.

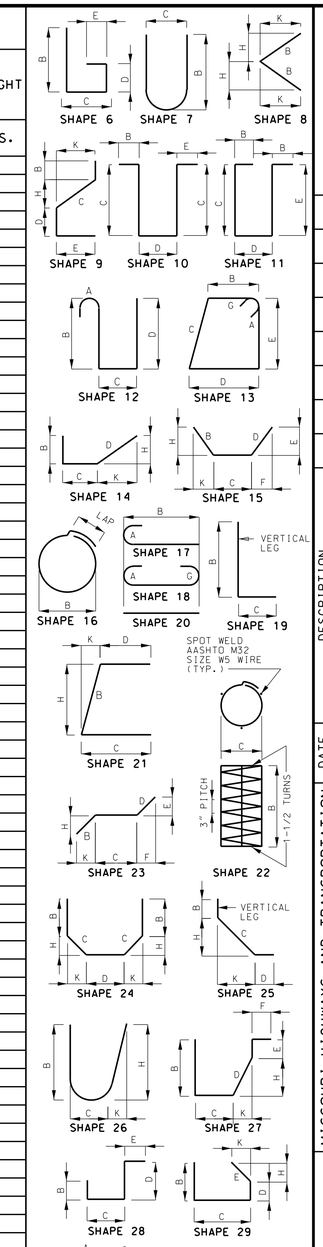

"THIS MEDIA SHOULD NOT BE CONSIDERED A CERTIFIED DOCUMENT."

DATE PREPARED	1/16/2014
ROUTE	50
STATE	MO
DISTRICT	BR
SHEET NO.	6
COUNTY	JACKSON
JOB NO.	J4P2191
CONTRACT ID.	
PROJECT NO.	
BRIDGE NO.	A24461

DATE	DESCRIPTION

MISSOURI HIGHWAYS AND TRANSPORTATION COMMISSION

105 WEST CAPITOL
JEFFERSON CITY, MO 65102
1-888-ASK-MODOT (1-888-275-6636)

IF A SEAL IS PRESENT ON THIS SHEET IT HAS BEEN ELECTRONICALLY SEALED AND DATED.

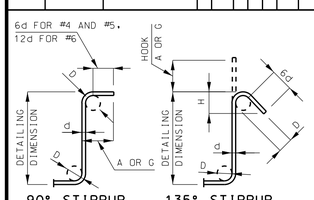

STIRRUP HOOK DIMENSIONS				
GRADES 40 - 50 - 60 KSI				
BAR SIZE	D (IN.)	90° HOOK	135° HOOK	
		HOOK A OR G	HOOK A OR G	APPROX. H
#4	2"	4 1/2"	4 1/2"	3"
#5	2 1/2"	6"	5 1/2"	3 3/4"
#6	4 1/2"	12"	8"	4 1/2"

NOTE: UNLESS OTHERWISE NOTED DIAMETER "D" IS THE SAME FOR ALL BENDS AND HOOKS ON A BAR.

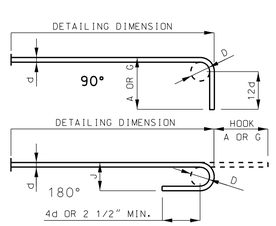

END HOOK DIMENSIONS				
BAR SIZE	D (IN.)	ALL GRADES		
		180° HOOKS		90° HOOKS
		A OR G	J	A OR G
#3	2 1/4"	5"	3"	6"
#4	3"	6"	4"	8"
#5	3 3/4"	7"	5"	10"
#6	4 1/2"	8"	6"	12"
#7	5 1/4"	10"	7"	14"
#8	6"	11"	8"	16"
#9	9 1/2"	15"	11 3/4"	19"
#10	10 3/4"	17"	13 1/4"	22"
#11	12"	19"	14 3/4"	2'-0"
#14	18 1/4"	2'-3"	21 3/4"	2'-7"

TWO ADDITIONAL #6-S1 ARE INCLUDED IN THE BAR BILL FOR TESTING.

NOTE:
ALL STANDARD HOOKS AND BENDS OTHER THAN 180 DEGREE ARE TO BE BENT WITH SAME PROCEDURE AS FOR 90 DEGREE STANDARD HOOKS.
HOOKS AND BENDS SHALL BE IN ACCORDANCE WITH THE PROCEDURES AS SHOWN ON THIS SHEET.
E = EPOXY COATED REINFORCEMENT.
S = STIRRUP.
X = BAR IS INCLUDED IN SUBSTRUCTURE QUANTITIES.
V = BAR DIMENSIONS VARY IN EQUAL INCREMENTS BETWEEN DIMENSIONS SHOWN ON THIS LINE AND THE FOLLOWING LINE.
NO. EA. = NUMBER OF BARS OF EACH LENGTH.
NOMINAL LENGTHS ARE BASED ON OUT TO OUT DIMENSIONS SHOWN IN BENDING DIAGRAMS AND ARE LISTED FOR FABRICATORS USE. (NEAREST INCH)
ACTUAL LENGTHS ARE MEASURED ALONG CENTERLINE BAR TO THE NEAREST INCH.
PAYWEIGHTS ARE BASED ON ACTUAL LENGTHS.
FOUR ANGLE OR CHANNEL SPACERS ARE REQUIRED FOR EACH COLUMN SPIRAL. SPACERS ARE TO BE PLACED ON INSIDE OF SPIRALS. LENGTH AND WEIGHT OF COLUMN SPIRALS DO NOT INCLUDE SPLICES OR SPACERS.
REINFORCING STEEL (GRADE 60) FY = 60,000 PSI.

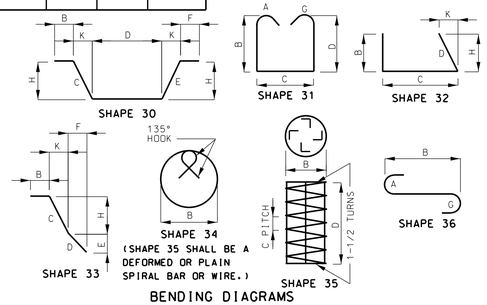

BENDING DIAGRAMS

Detailed Dec. 2013
Checked Dec. 2013

Note: This drawing is not to scale. Follow dimensions.

MISSOURI HIGHWAYS AND TRANSPORTATION COMMISSION

SEC/SUR 22 TWP 48N RGE 33W

U.I.P. AND REHABILITATE EXISTING (61'-82'-82')(82'-82'-82'-82')(82'-82'-63'-63'-63')(49'-88'-71'-71')
CONTINUOUS PRESTRESSED CONCRETE I-GIRDER SPANS, (156'-135'-135'-72') CONTINUOUS COMPOSITE PLATE GIRDER SPANS

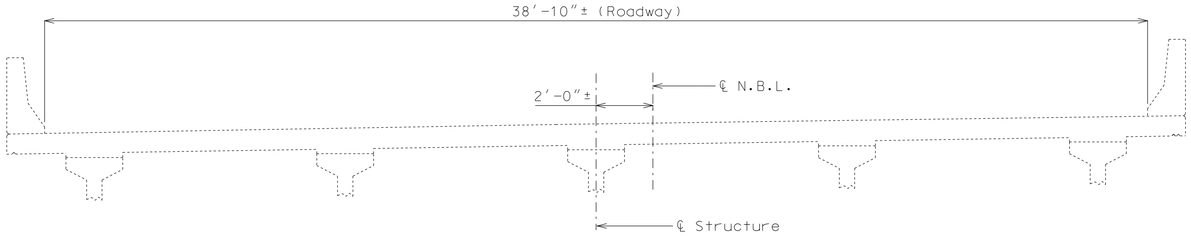

TYPICAL SECTION THRU SLAB

Note: Prestressed Concrete I-Girder spans shown, Plate Girder spans similar.

Notes:

Polymer concrete shall be in accordance with Sec 623.

Payment for furnishing and installing the $\frac{1}{2}$"Ø galvanized threaded rod with hex nuts and polymer concrete will be considered completely covered by the contract unit price for Partial Removal and Plugging Slab Drain.

Threaded rod, washers and hex nuts shall be galvanized in accordance with ASTM A153.

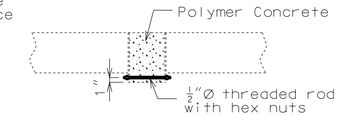

SECTION A-A

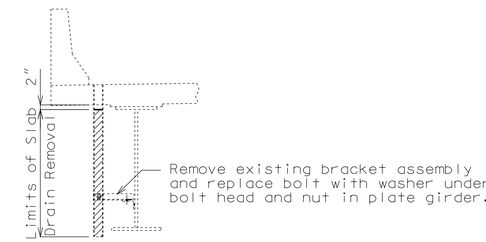

PART SECTION NEAR SLAB
DRAIN NEAREST INT. BENT NO. 18 IN SPAN (17-18)
SHOWING PARTIAL REMOVAL OF SLAB DRAIN

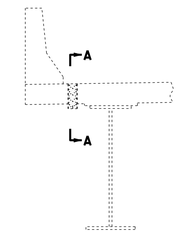

PART SECTION NEAR SLAB
DRAIN NEAREST INT. BENT NO. 18
SHOWING PLUGGED SLAB DRAIN

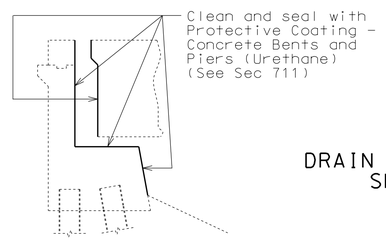

TYPICAL SECTION THRU
END BENT NO. 21 SHOWING
PROTECTIVE COATING

Note: Cleaning and sealing shall be done prior to installation of expansion device and new concrete.

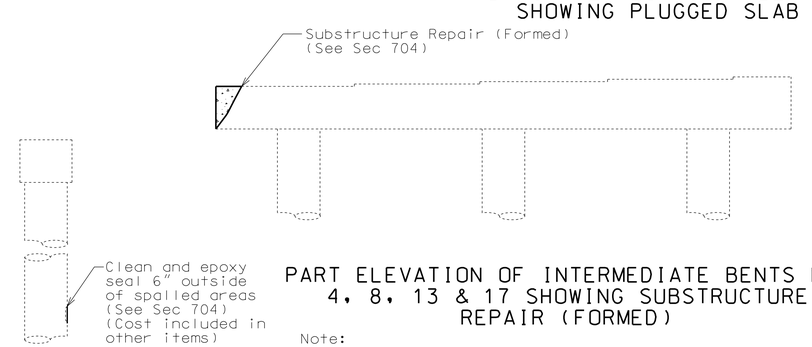

PART ELEVATION OF INTERMEDIATE BENTS NO.
4, 8, 13 & 17 SHOWING SUBSTRUCTURE
REPAIR (FORMED)

Note:

Bent No. 4, Girder No. 1, southeast corner shall be supported during the substructure repair. Required temporary support load of 75 kips is a service load without a factor of safety. It includes a construction load of 50 psf and assumes traffic loads are shifted away from the supported girder.

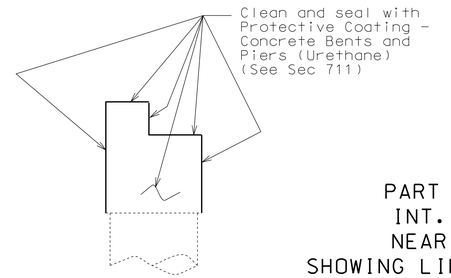

PART SECTION THRU
INT. BENT NO. 18
NEAR EAST COLUMN
SHOWING LIMITS OF EPOXY SEAL

PART ELEVATION OF
INT. BENT NO. 17 SHOWING
PROTECTIVE COATING

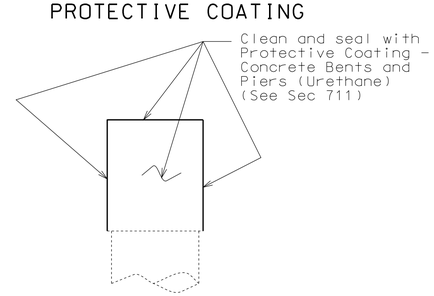

PART ELEVATION OF
INT. BENTS NO. 4, 8 & 13 SHOWING
PROTECTIVE COATING

GENERAL NOTES:

Design Specifications:

2002 - AASHTO LFD (17th Edition) Standard Specifications
Bridge Deck Rating = 8

Design Loading:

HS20-44 (1983 & New Construction)
Military 24,000# Tandem Axle

Design Unit Stresses:

Class B-1 Concrete (Slab & Safety Barrier Curb) f'c = 4,000 psi

Reinforcing Steel (Grade 60) fy = 60,000 psi

Reinforcing Steel:

Minimum clearance to reinforcing steel shall be $1\frac{1}{2}$", unless otherwise shown.

Expansion Joints:

The concrete for slab and barrier curb replacement shall be Class B-1.

Payment for slab concrete, complete-in-place, for expansion joint replacement will be considered completely covered by the contract unit price for Class B-1 concrete per cu. yard.

Payment for furnishing and installing slab reinforcing steel, complete-in-place, for expansion joint replacement will be considered completely covered by the contract unit price for Reinforcing Steel (Epoxy Coated).

Concrete Protective Coatings:

Protective coating for concrete bents and piers (Urethane) shall be applied as shown on the bridge plans and in accordance with Sec 711.

Miscellaneous:

Bars bonded in old concrete not removed shall be cleanly stripped and embedded into new concrete where possible. If length is available, old bars shall extend into new concrete at least 40 diameters for smooth bars and 30 diameters for deformed bars, unless otherwise noted.

Outline of old work is indicated by light dashed lines. Heavy lines indicate new work.

Contractor shall verify all dimensions in field before ordering new material.

The area exposed by the removal of concrete and not covered with new concrete shall be coated with an approved qualified special mortar in accordance with Sec 704.

Traffic Handling:

See Sheet No. 2 for Details of Stage Construction and Roadway Plans for Traffic Control.

Estimated Quantities

Item		Total
Removal of Existing Expansion Joints & Adjacent Concrete	linear foot	243
Remove and Replace Barrier Curb	linear foot	62
Partial Removal and Plugging Slab Drain	each	1
Class B-1 Concrete	cu. yard	48.2
Temporary Falsework	lump sum	1
Substructure Repair (Formed)	sq. foot	140
Reinforcing Steel (Epoxy Coated)	pound	2870
Protective Coating - Concrete Bents & Piers (Urethane)	lump sum	1
Expansion Device (Flat Plate)	linear foot	70
Strip Seal Expansion Joint System	linear foot	173

REPAIRS TO BRIDGE: RTE. 71 NB OVER 85th STREET, BLUE RIVER, BLUE RIVER ROAD & HICKMAN MILLS DR.

STATE ROAD FROM I-435 NORTH TO BLUE RIVER RD.

AT BLUE RIVER RD.

STA. 512+65.26± (MATCH EXISTING)

STD. 617.20
STD. 706.35

Detailed Oct. 2013
Checked Oct. 2013

Note: This drawing is not to scale. Follow dimensions.

"THIS MEDIA SHOULD NOT BE CONSIDERED A CERTIFIED DOCUMENT."

DATE PREPARED	
11/12/2013	
ROUTE 71	STATE MO
DISTRICT BR	SHEET NO. 1
COUNTY JACKSON	
JOB NO. J4P2191	
CONTRACT ID.	
PROJECT NO.	
BRIDGE NO. A27331	

DATE	DESCRIPTION

MISSOURI HIGHWAYS AND TRANSPORTATION COMMISSION
105 WEST CAPITOL
JEFFERSON CITY, MO 65102
1-888-ASK-MODOT (1-888-275-6636)

IF A SEAL IS PRESENT ON THIS SHEET IT HAS BEEN ELECTRONICALLY SEALED AND DATED.

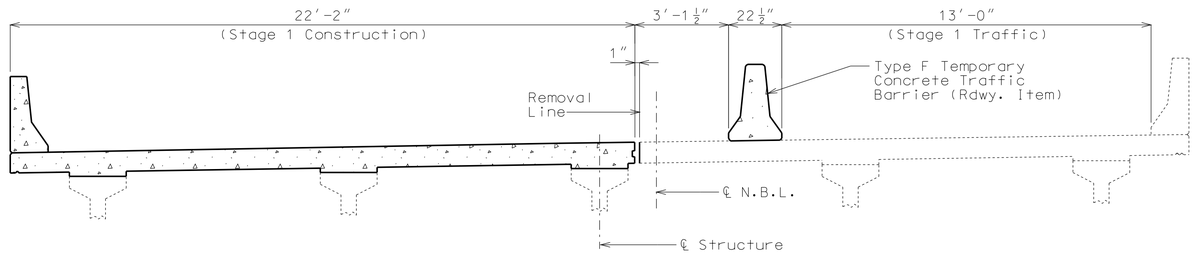

STAGE 1 CONSTRUCTION

(Prestressed girders shown, plate girders similar)

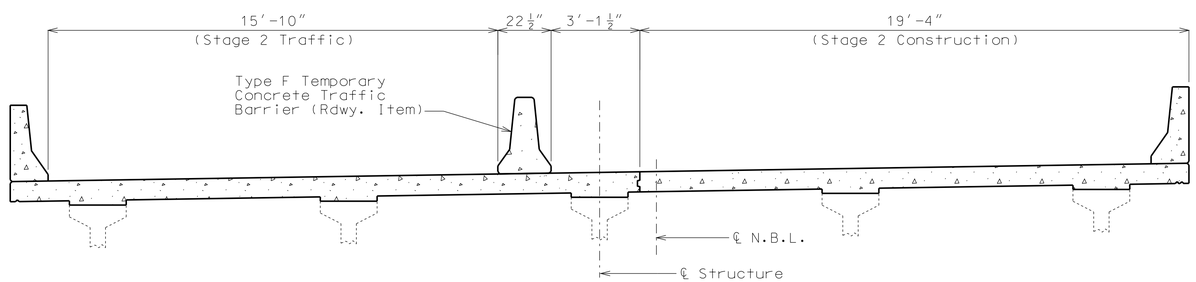

STAGE 2 CONSTRUCTION

(Prestressed girders shown, plate girders similar)

Note:

Temporary Barrier shall not be attached to the bridge.

DETAILS OF STAGE CONSTRUCTION

Detailed Oct. 2013
Checked Oct. 2013

Note: This drawing is not to scale. Follow dimensions.

"THIS MEDIA SHOULD NOT BE CONSIDERED A CERTIFIED DOCUMENT."

DATE PREPARED	12/9/2013
ROUTE	71
STATE	MO
DISTRICT	BR
SHEET NO.	2
COUNTY	JACKSON
JOB NO.	J4P2191
CONTRACT ID.	
PROJECT NO.	
BRIDGE NO.	A27331

DATE	DESCRIPTION

MISSOURI HIGHWAYS AND TRANSPORTATION COMMISSION

105 WEST CAPITOL
JEFFERSON CITY, MO 65102
1-888-ASK-MODOT (1-888-275-6636)

IF A SEAL IS PRESENT ON THIS SHEET IT HAS BEEN ELECTRONICALLY SEALED AND DATED.

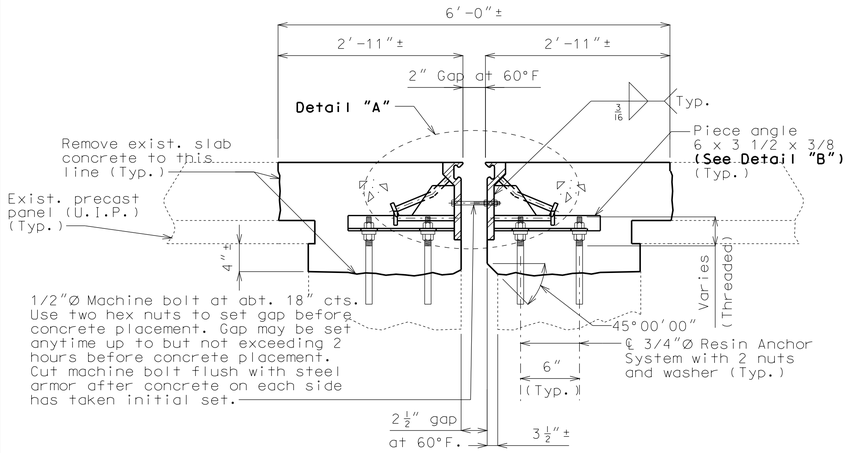

SECTION A-A

Note: Strip seal gland not shown for clarity.

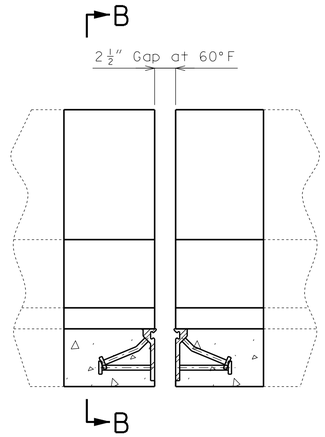

Note: Strip seal gland not shown for clarity.

PART ELEVATION OF BARRIER CURB

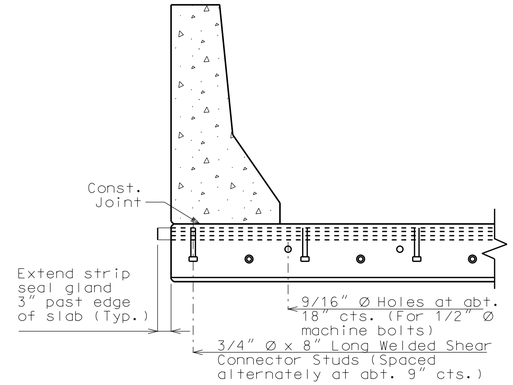

PART SECTION B-B

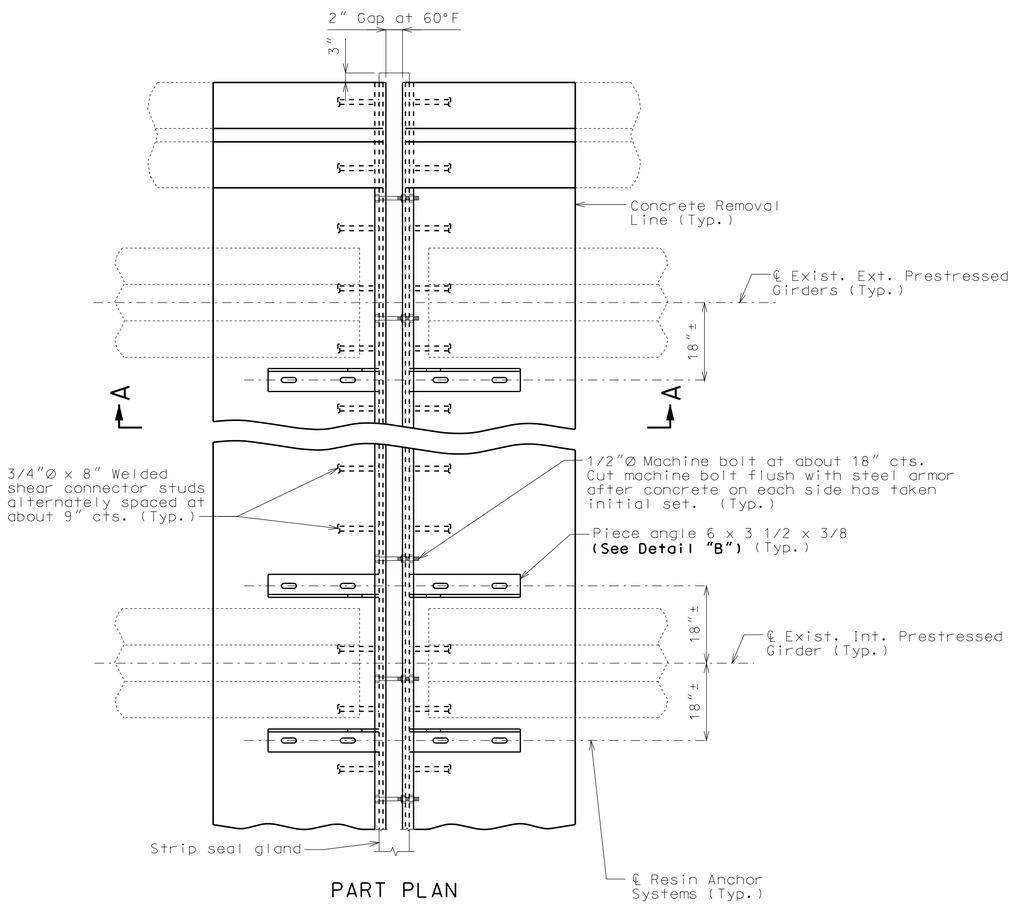

PART PLAN

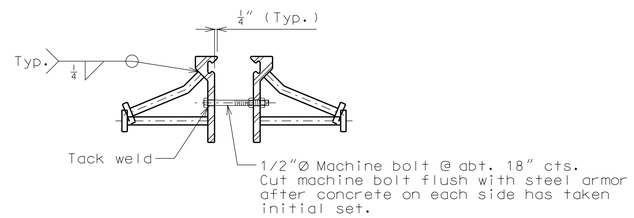

DETAIL "A"

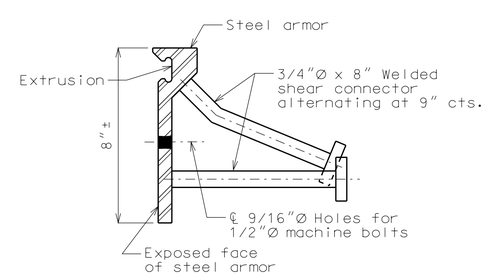

DETAIL OF JOINT ARMOR

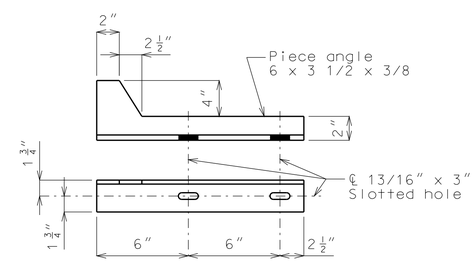

DETAIL "B"

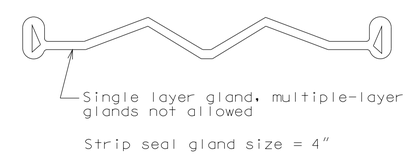

DETAIL OF GLAND

GENERAL NOTES:

Expansion joint system shall be fabricated in one section, except for stage construction and when the length is over 50 feet. A complete joint penetration groove welded splice shall be required. Welds shall be ground flush to provide a smooth surface. The expansion joint system shall be fabricated and installed to the crown and grade of the roadway.

The strip seal gland shall be installed in joints in one continuous piece without field splices. Factory splicing will be permitted for joints in excess of 53 feet.

Structural steel for the expansion joint system shall be ASTM A709 Grade 36 except the steel armor may be ASTM A709 Grade 50W. Anchors for the expansion joint system shall be in accordance with Sec 1037. Strip seal expansion joint system shall be in accordance with Sec 717.

Structural steel for the expansion joint system shall be coated with a minimum of two coats of inorganic zinc primer (5 mils minimum) or galvanized in accordance with ASTM A123. Anchors need not be protected from overspray.

Plan dimensions are based on installation at 60°F. The expansion gap and other dimensions shall be increased or decreased 1/4" for each 10° fall or rise in temperature at installation.

New longitudinal reinforcing steel shall be placed and exist. longitudinal reinforcing steel shall be cut/bent so that ends shall not be more than ±1" from vertical leg of the steel armor at the expansion joint system.

Concrete shall be forced under and around steel armor and anchors. Proper consolidation of the concrete shall be achieved by localized internal vibration.

The contractor shall use one of the qualified resin anchor systems in accordance with Sec 1039.

Cost of furnishing and installing the resin anchor system, complete in place, will be considered completely covered by the contract unit price for Strip Seal Expansion Joint System.

The minimum embedment depth in concrete with f'c = 4,000 psi for the resin anchor system shall be that required to meet the minimum ultimate pullout strength in accordance with Sec 1039 but shall not be less than 5".

DETAILS OF STRIP SEAL AT INTERMEDIATE BENT NO. 4

Detailed Oct. 2013
Checked Oct. 2013

Note: This drawing is not to scale. Follow dimensions.

"THIS MEDIA SHOULD NOT BE CONSIDERED A CERTIFIED DOCUMENT."

DATE PREPARED	
11/12/2013	
ROUTE 71	STATE MO
DISTRICT BR	SHEET NO. 3
COUNTY JACKSON	
JOB NO. J4P2191	
CONTRACT ID.	
PROJECT NO.	
BRIDGE NO. A27331	

DATE	DESCRIPTION

MISSOURI HIGHWAYS AND TRANSPORTATION COMMISSION
105 WEST CAPITOL
JEFFERSON CITY, MO 65102
1-888-ASK-MODOT (1-888-275-6636)

IF A SEAL IS PRESENT ON THIS SHEET IT HAS BEEN ELECTRONICALLY SEALED AND DATED.

REV.

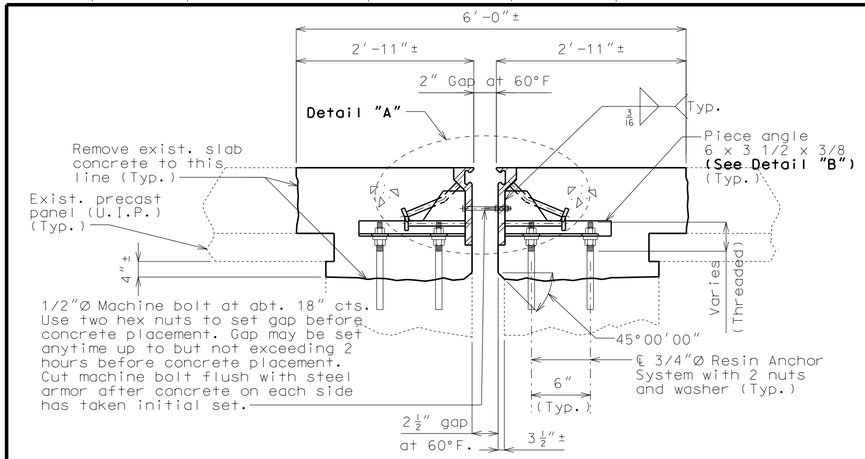

SECTION A-A

Note: Strip seal gland not shown for clarity.

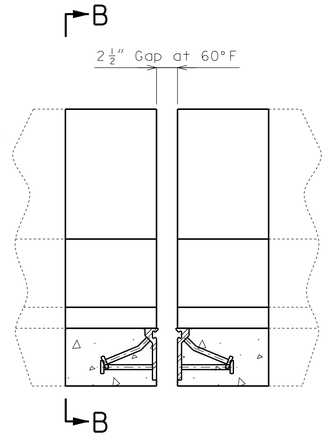

Note: Strip seal gland not shown for clarity.

PART ELEVATION OF BARRIER CURB

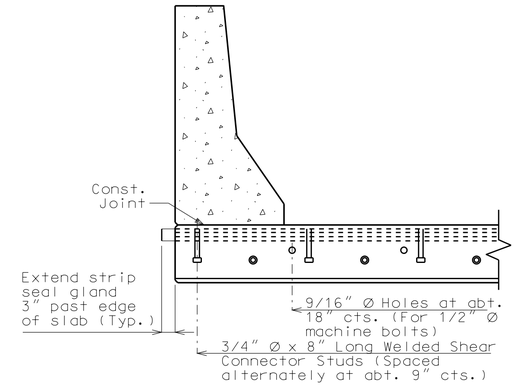

PART SECTION B-B

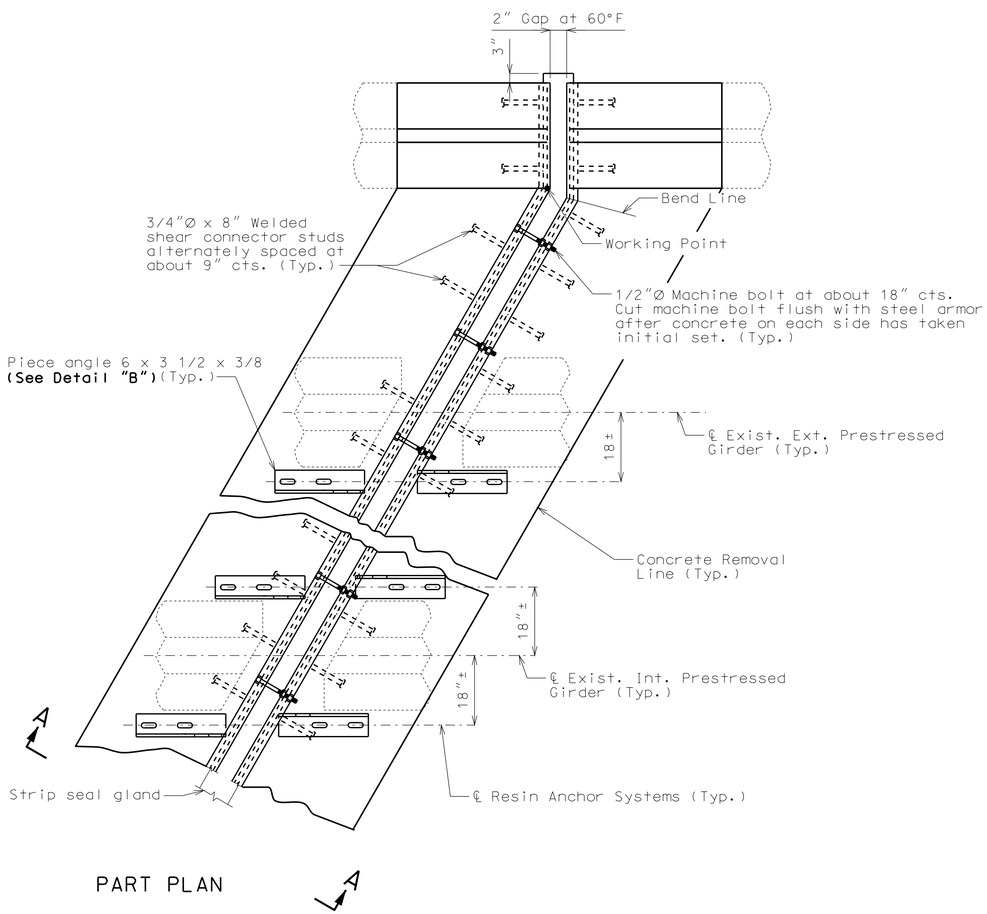

PART PLAN

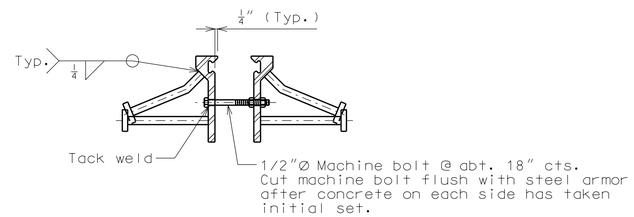

DETAIL "A"

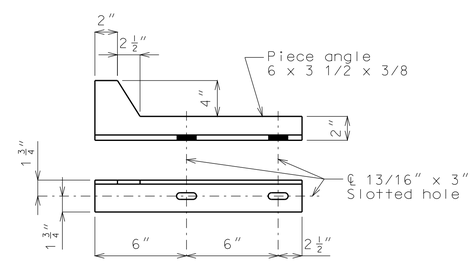

DETAIL "B"

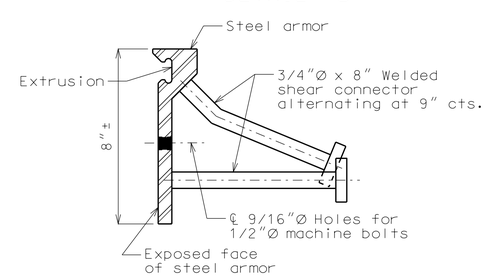

DETAIL OF JOINT ARMOR

Strip seal gland size = 4"

DETAIL OF GLAND

GENERAL NOTES:

Expansion joint system shall be fabricated in one section, except for stage construction and when the length is over 50 feet. A complete joint penetration groove welded splice shall be required. Welds shall be ground flush to provide a smooth surface. The expansion joint system shall be fabricated and installed to the crown and grade of the roadway.

The strip seal gland shall be installed in joints in one continuous piece without field splices. Factory splicing will be permitted for joints in excess of 53 feet.

Structural steel for the expansion joint system shall be ASTM A709 Grade 36 except the steel armor may be ASTM A709 Grade 50W. Anchors for the expansion joint system shall be in accordance with Sec 1037. Strip seal expansion joint system shall be in accordance with Sec 717.

Structural steel for the expansion joint system shall be coated with a minimum of two coats of inorganic zinc primer (5 mils minimum) or galvanized in accordance with ASTM A123. Anchors need not be protected from overspray.

Plan dimensions are based on installation at 60°F. The expansion gap and other dimensions shall be increased or decreased 1/4" for each 10° fall or rise in temperature at installation.

New longitudinal reinforcing steel shall be placed and exist. longitudinal reinforcing steel shall be cut/bent so that ends shall not be more than ±1" from vertical leg of the steel armor at the expansion joint system.

Concrete shall be forced under and around steel armor and anchors. Proper consolidation of the concrete shall be achieved by localized internal vibration.

The contractor shall use one of the qualified resin anchor systems in accordance with Sec 1039.

Cost of furnishing and installing the resin anchor system, complete in place, will be considered completely covered by the contract unit price for Strip Seal Expansion Joint System.

The minimum embedment depth in concrete with f'c = 4,000 psi for the resin anchor system shall be that required to meet the minimum ultimate pullout strength in accordance with Sec 1039 but shall not be less than 5".

"THIS MEDIA SHOULD NOT BE CONSIDERED A CERTIFIED DOCUMENT."

DATE PREPARED	
11/12/2013	
ROUTE 71	STATE MO
DISTRICT BR	SHEET NO. 4
COUNTY JACKSON	
JOB NO. J4P2191	
CONTRACT ID.	
PROJECT NO.	
BRIDGE NO. A27331	

DESCRIPTION	DATE

MISSOURI HIGHWAYS AND TRANSPORTATION COMMISSION

105 WEST CAPITOL
JEFFERSON CITY, MO 65102
1-888-ASK-MODOT (1-888-275-6636)

IF A SEAL IS PRESENT ON THIS SHEET IT HAS BEEN ELECTRONICALLY SEALED AND DATED.

DETAILS OF STRIP SEAL AT INTERMEDIATE BENTS NO. 8 & 13

Detailed Oct. 2013
Checked Oct. 2013

Note: This drawing is not to scale. Follow dimensions.

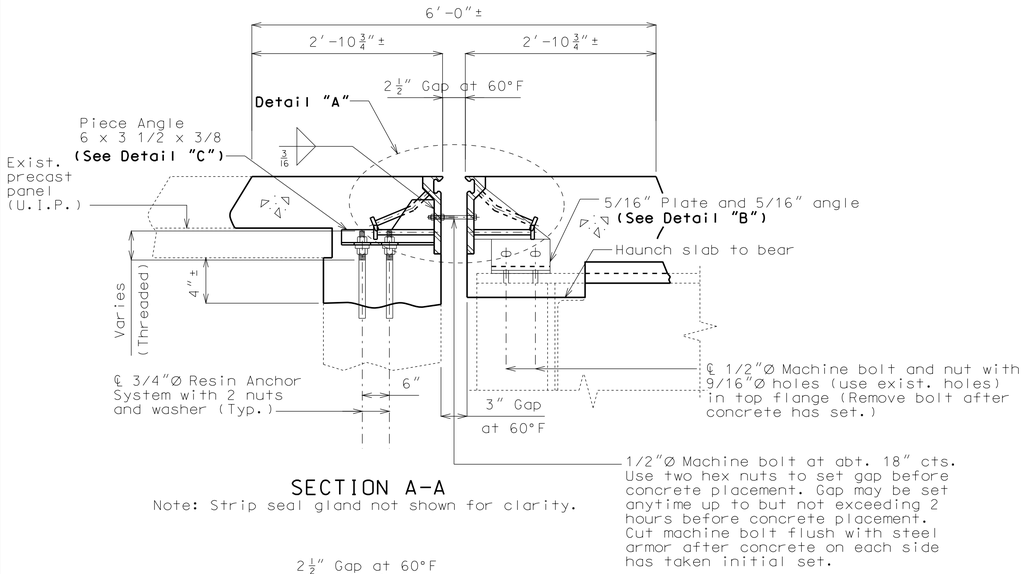

SECTION A-A

Note: Strip seal gland not shown for clarity.

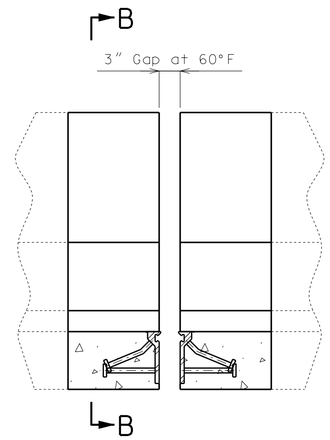

Note: Strip seal gland not shown for clarity.

PART ELEVATION OF BARRIER CURB

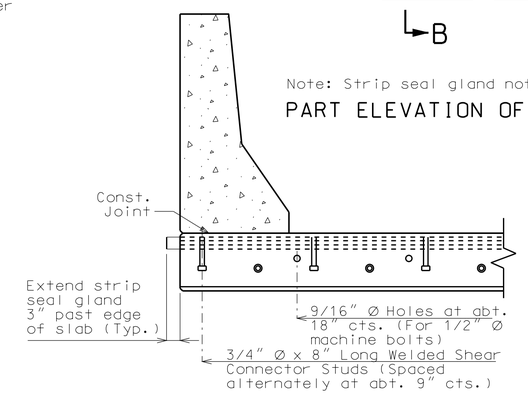

PART SECTION B-B

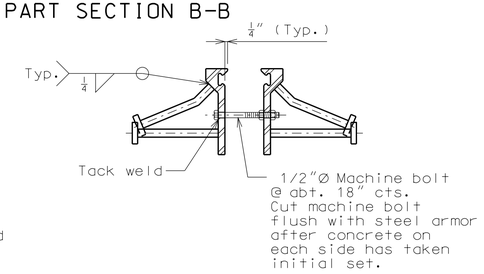

DETAIL "A"

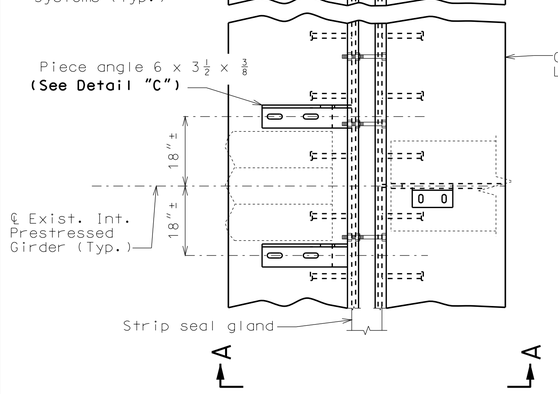

PART PLAN

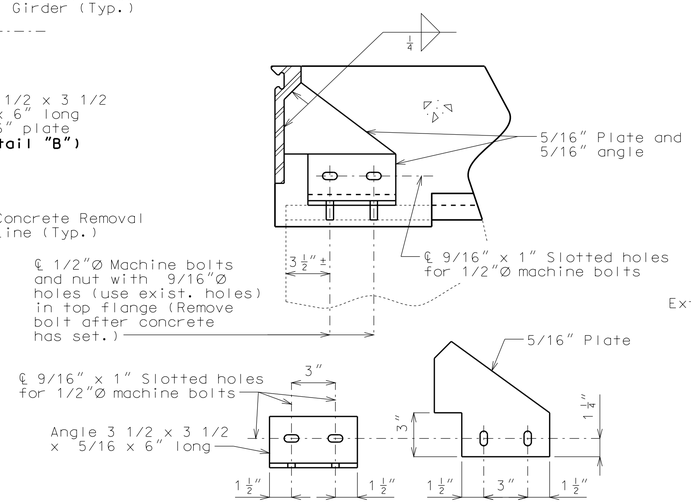

DETAIL "B"

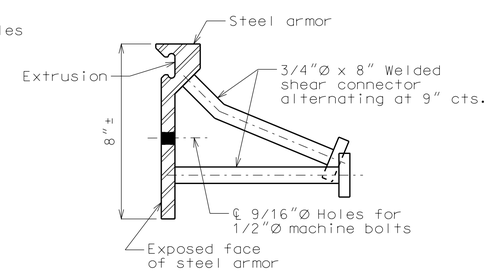

DETAIL OF JOINT ARMOR

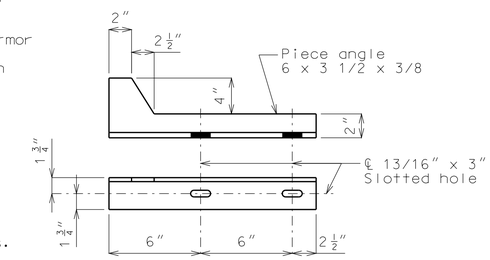

DETAIL "C"

Strip seal gland size = 5"

DETAIL OF GLAND

GENERAL NOTES:

Expansion joint system shall be fabricated in one section, except for stage construction and when the length is over 50 feet. A complete joint penetration groove welded splice shall be required. Welds shall be ground flush to provide a smooth surface. The expansion joint system shall be fabricated and installed to the crown and grade of the roadway.

The strip seal gland shall be installed in joints in one continuous piece without field splices. Factory splicing will be permitted for joints in excess of 53 feet.

Structural steel for the expansion joint system shall be ASTM A709 Grade 36 except the steel armor may be ASTM A709 Grade 50W. Anchors for the expansion joint system shall be in accordance with Sec 1037. Strip seal expansion joint system shall be in accordance with Sec 717.

Structural steel for the expansion joint system shall be coated with a minimum of two coats of inorganic zinc primer (5 mils minimum) or galvanized in accordance with ASTM A123. Anchors need not be protected from overspray.

Plan dimensions are based on installation at 60°F. The expansion gap and other dimensions shall be increased or decreased ¼" for each 10° fall or rise in temperature at installation.

New longitudinal reinforcing steel shall be placed and exist. longitudinal reinforcing steel shall be cut/bent so that ends shall not be more than ±1" from vertical leg of the steel armor at the expansion joint system.

Concrete shall be forced under and around steel armor and anchors. Proper consolidation of the concrete shall be achieved by localized internal vibration.

The contractor shall use one of the qualified resin anchor systems in accordance with Sec 1039.

Cost of furnishing and installing the resin anchor system, complete in place, will be considered completely covered by the contract unit price for Strip Seal Expansion Joint System.

The minimum embedment depth in concrete with f'c = 4,000 psi for the resin anchor system shall be that required to meet the minimum ultimate pullout strength in accordance with Sec 1039 but shall not be less than 5".

DETAILS OF STRIP SEAL AT INTERMEDIATE BENT NO. 17

Detailed Oct. 2013
Checked Oct. 2013

Note: This drawing is not to scale. Follow dimensions.

"THIS MEDIA SHOULD NOT BE CONSIDERED A CERTIFIED DOCUMENT."

DATE PREPARED	
11/12/2013	
ROUTE 71	STATE MO
DISTRICT BR	SHEET NO. 5
COUNTY JACKSON	
JOB NO. J4P2191	
CONTRACT ID.	
PROJECT NO.	
BRIDGE NO. A27331	

DATE	DESCRIPTION

IF A SEAL IS PRESENT ON THIS SHEET IT HAS BEEN ELECTRONICALLY SEALED AND DATED.

MISSOURI HIGHWAYS AND TRANSPORTATION COMMISSION
105 WEST CAPITOL
JEFFERSON CITY, MO 65102
1-888-ASK-MODOT (1-888-275-6636)

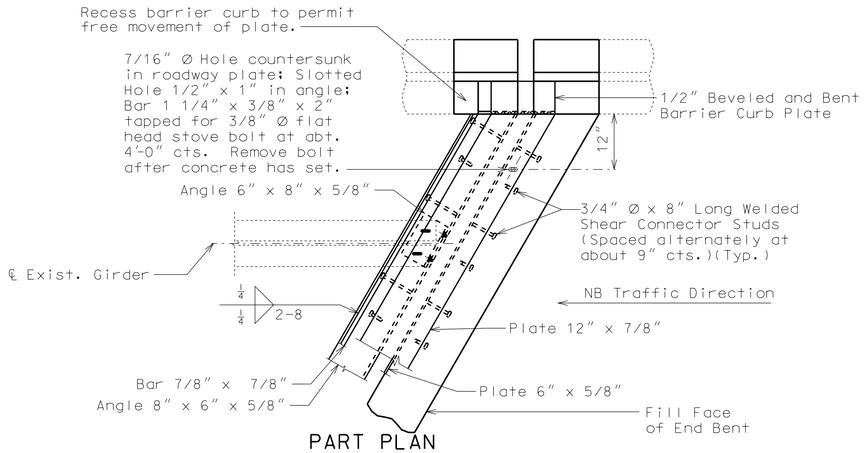

PART PLAN

Note: Concrete Vent Holes not shown for clarity.

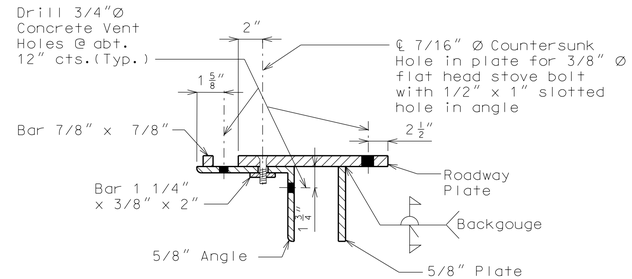

PART SECTION (TYPICAL)

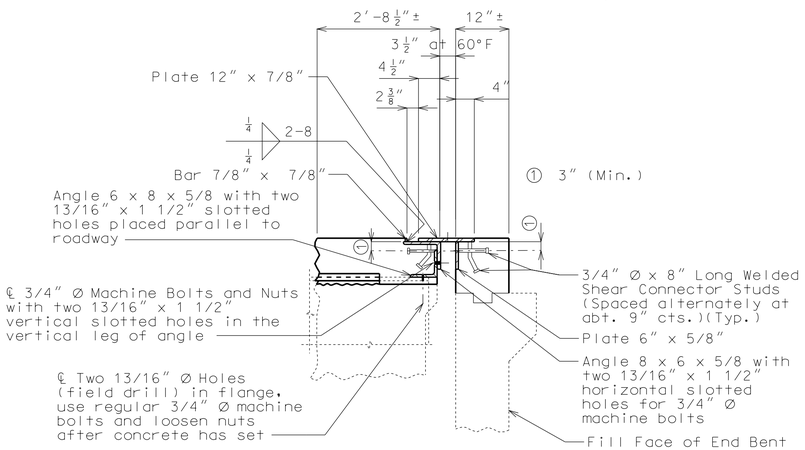

PART SECTION AT END BENT

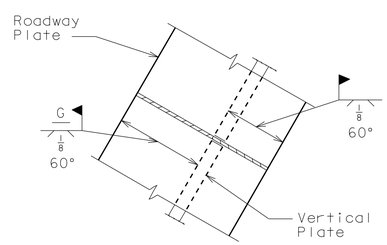

PART PLAN ROADWAY PLATE AND VERTICAL PLATE

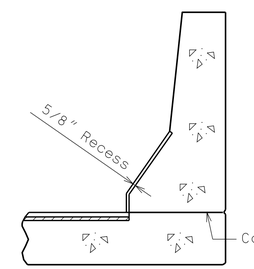

PART SECTION B-B

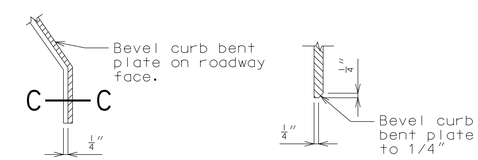

PART ELEVATION AT END OF BEVELED CURB BENT PLATE

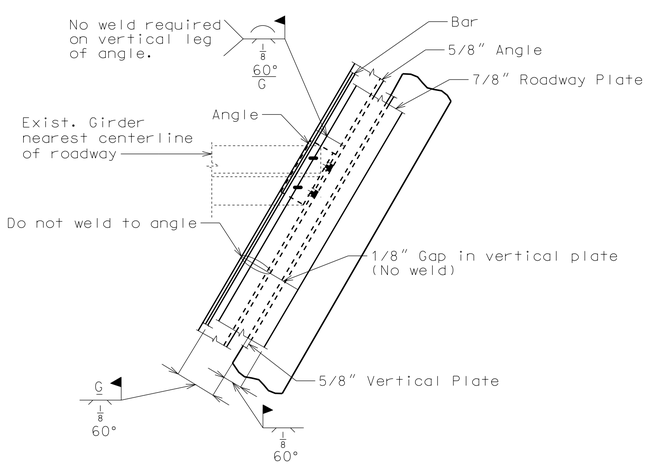

PERMISSIBLE FIELD SPLICE AT END BENT

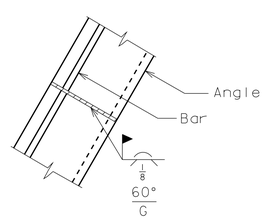

PART PLAN OF ANGLE AND BAR

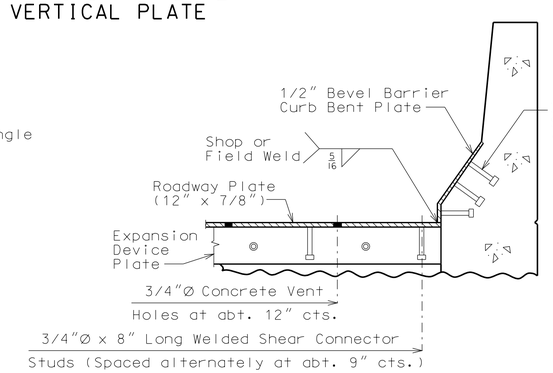

PART SECTION A-A

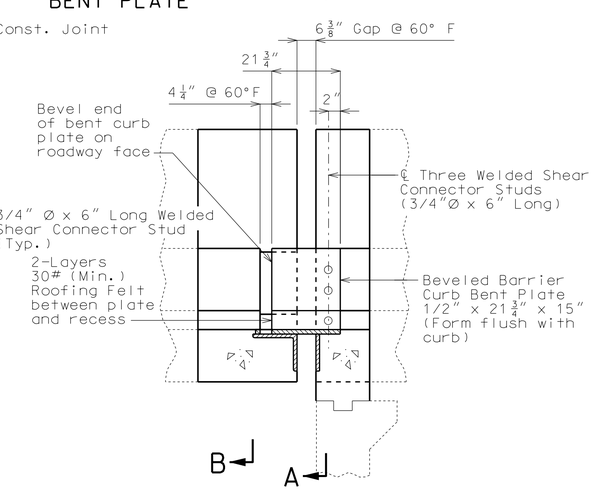

ELEVATION OF BARRIER CURB

GENERAL NOTES:

Expansion device shall be fabricated in one section, except for stage construction and when the length is over 50 feet. A complete joint penetration groove weld splice shall be required. Welds shall be ground flush to provide a smooth surface. The expansion device shall be fabricated and installed to the crown and grade of the roadway.

Plan dimensions are based on installation at 60°F. The expansion gap and other dimensions shall be increased or decreased 1/4" for each 10° fall or rise in temperature at installation.

Material for the expansion device shall be ASTM A709 Grade 36 structural steel. Anchors for the expansion device shall be in accordance with Sec 1037.

Structural steel for the expansion device and curb plate shall be coated with a minimum of two coats of inorganic zinc primer (5 mils minimum) or galvanized in accordance with ASTM A123. Anchors need not be protected from overspray.

Payment for furnishing, coating or galvanizing and installing the structural steel for the expansion device will be considered completely covered by the contract unit price for Expansion Device (Flat Plate) per linear foot.

Concrete shall be forced under and around flat plate, anchors and angles. Proper consolidation shall be achieved by localized internal vibration. Finishing of the concrete shall be achieved by hand finishing within one foot of the expansion device. The vertical and horizontal concrete vent holes shall be offset from each other. Do not alternate holes at the 12" spacing.

New longitudinal reinforcing steel shall be placed and exist. longitudinal reinforcing steel shall be cut/bent so that ends shall not be more than ±1" from vertical leg of the steel armor at the expansion joint system.

Complete joint penetration welds utilized in the fabrication of the expansion device shall be nondestructively tested by an approved method.

"THIS MEDIA SHOULD NOT BE CONSIDERED A CERTIFIED DOCUMENT."

DATE PREPARED	
11/12/2013	
ROUTE 71	STATE MO
DISTRICT BR	SHEET NO. 6
COUNTY JACKSON	
JOB NO. J4P2191	
CONTRACT ID.	
PROJECT NO.	
BRIDGE NO. A27331	

DATE	DESCRIPTION

MISSOURI HIGHWAYS AND TRANSPORTATION COMMISSION

105 WEST CAPITOL
JEFFERSON CITY, MO 65102
1-888-ASK-MODOT (1-888-275-6636)

IF A SEAL IS PRESENT ON THIS SHEET IT HAS BEEN ELECTRONICALLY SEALED AND DATED.

DETAILS OF FLAT PLATE EXPANSION DEVICE AT END BENT NO. 21

Detailed Oct. 2013
Checked Oct. 2013

Note: This drawing is not to scale. Follow dimensions.

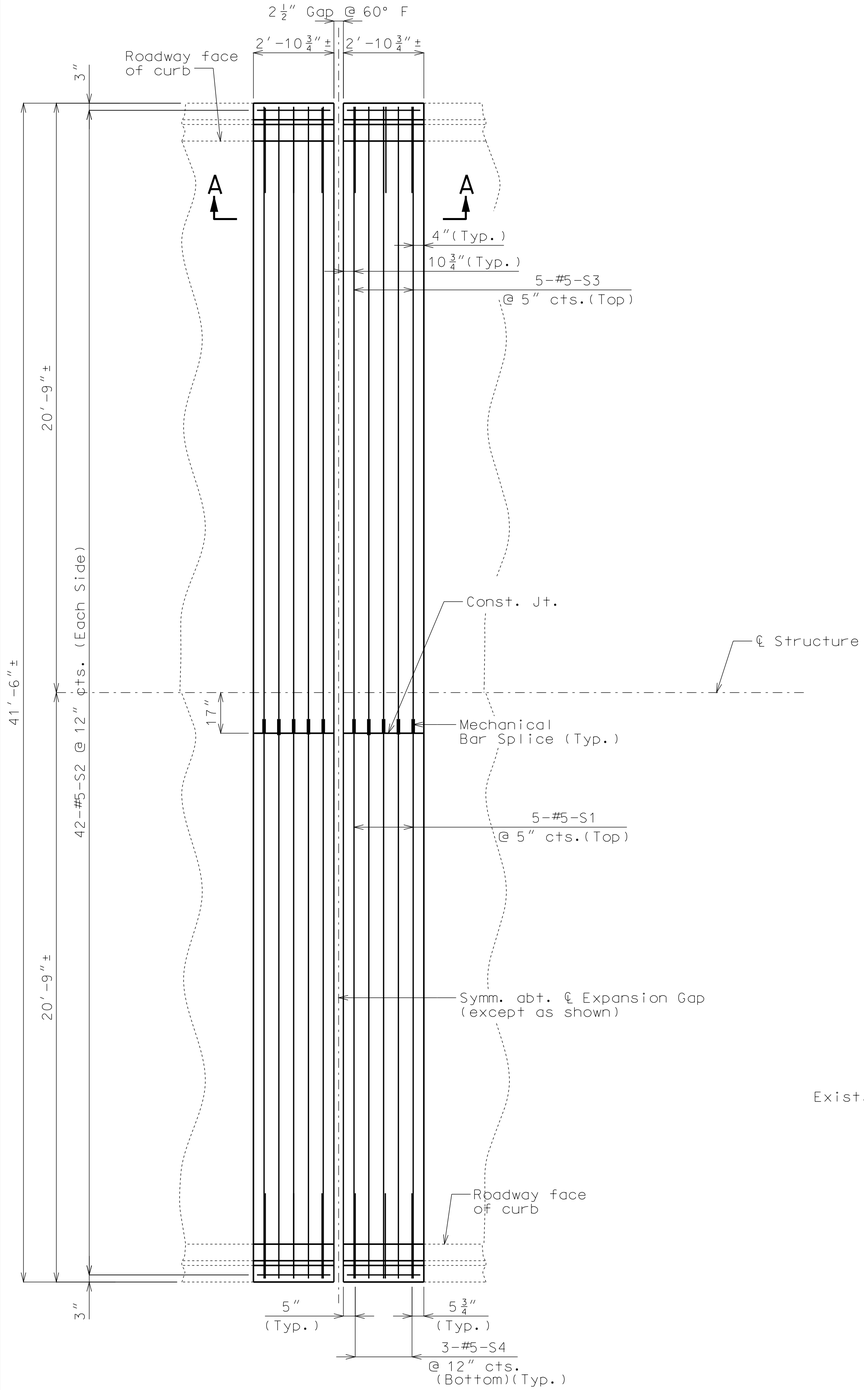

PART PLAN OF SLAB @ INT. BENT NO. 4
SHOWING REINFORCEMENT

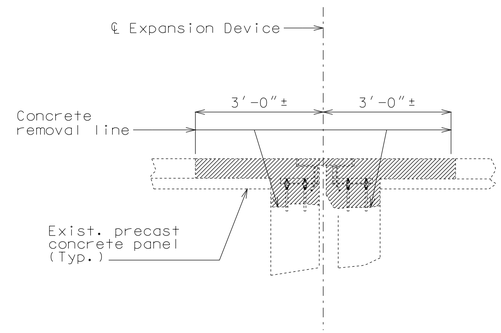

PART SECTION THRU
EXPANSION DEVICE @
INT. BENT NO. 4
SHOWING REMOVAL

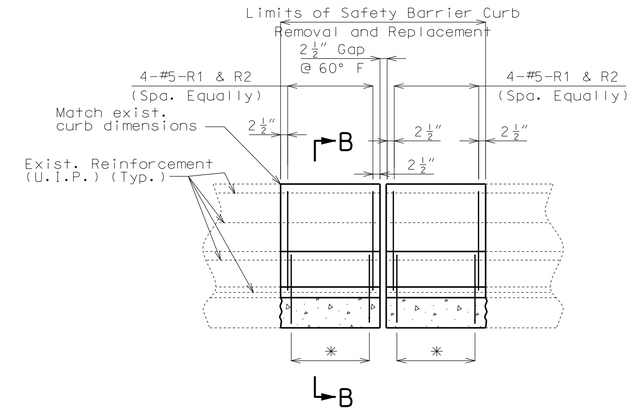

* 4-#5-R3 & R4 spaced with #5-R1 & R2

PART ELEVATION SHOWING
SAFETY BARRIER CURB REINFORCEMENT
AT INTERMEDIATE BENT NO. 4

Note: Expansion device not shown for clarity.

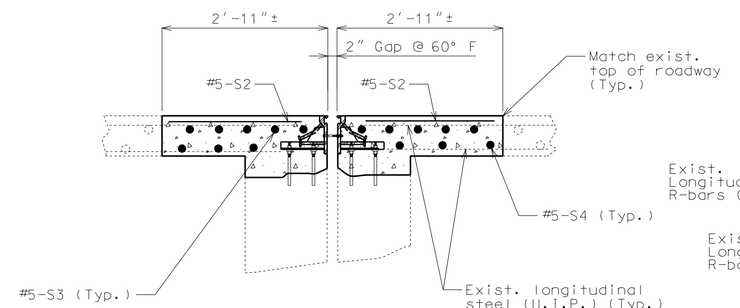

SECTION A-A

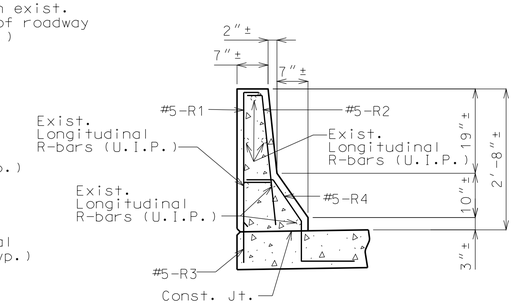

PART SECTION B-B

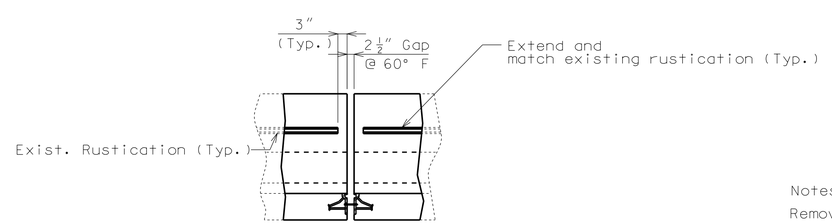

PART ELEVATION SHOWING PARTIAL
SAFETY BARRIER CURB REPLACEMENT

Note: Strip seal gland not shown for clarity.

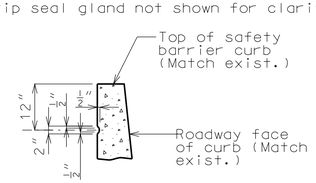

PART SECTION SHOWING
RUSTICATION DETAILS

Notes:

Remove existing stirrups within limits of Barrier Curb Removal.

All exposed edges of new barrier curb shall match existing barrier curb.

Payment for concrete curb removal and all new concrete and reinforcement for barrier curb, complete-in-place, will be considered completely covered by the contract unit price for Remove and Replace Barrier Curb per linear foot.

Shift S-bars where necessary to clear the expansion device.

The contractor shall use a mechanical bar splice for #5-S1 & #5-S3 bars at the specified location. The total bar lengths for bars indicated in the bill of reinforcing steel are determined based on the end of the bars being located flush to the face of the construction joint. No additional payment will be made for any additional bar lengths required for the mechanical bar splices. Mechanical bar splices shall be in accordance with Sec 706 except that no measurement will be made for mechanical bar splice and will be considered completely covered by the contract unit price for the reinforcing steel.

"THIS MEDIA SHOULD NOT BE CONSIDERED A CERTIFIED DOCUMENT."

DATE PREPARED	12/9/2013
ROUTE	71
STATE	MO
DISTRICT	BR
SHEET NO.	7
COUNTY	JACKSON
JOB NO.	J4P2191
CONTRACT ID.	
PROJECT NO.	
BRIDGE NO.	A27331

DESCRIPTION

DATE

MISSOURI HIGHWAYS AND TRANSPORTATION COMMISSION

105 WEST CAPITOL
JEFFERSON CITY, MO 65102
1-888-ASK-MODOT (1-888-275-6636)

IF A SEAL IS PRESENT ON THIS SHEET IT HAS BEEN ELECTRONICALLY SEALED AND DATED.

Detailed Oct. 2013
Checked Oct. 2013

Note: This drawing is not to scale. Follow dimensions.

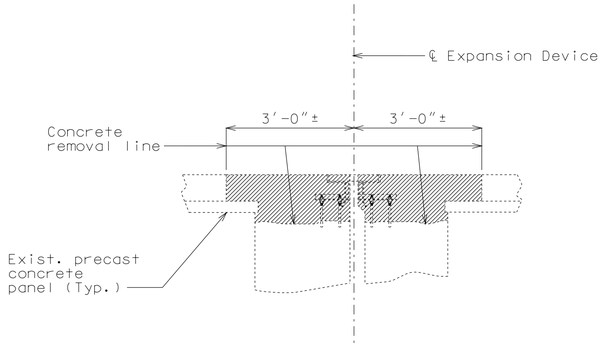

PART SECTION THRU
EXPANSION DEVICE @
INT. BENTS NO. 8 & 13
SHOWING REMOVAL

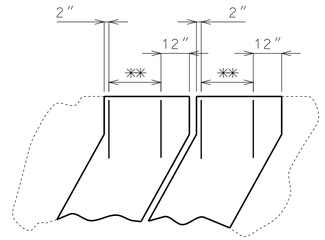

✱✱ 3-#5-S4 (Spa. Equally)

PART PLAN OF SLAB AT
INT. BENTS NO. 8 & 13
SHOWING REINFORCEMENT

(Left side shown, right side similar)

Note: Existing reinforcement not shown for clarity.

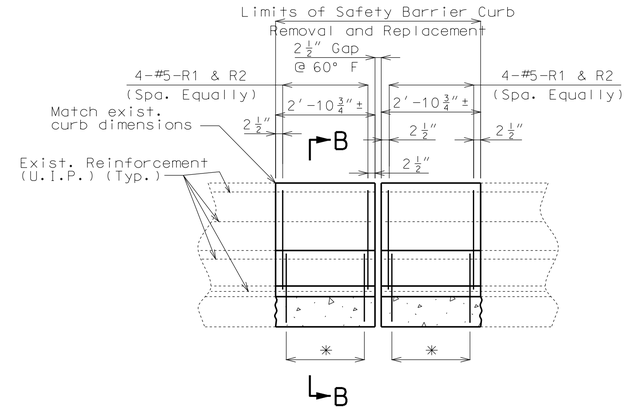

✳ 4-#5-R3 & R4 spaced with #5-R1 & R2

PART ELEVATION SHOWING
SAFETY BARRIER CURB REINFORCEMENT
AT INTERMEDIATE BENTS NO. 8 & 13

Note: Expansion device not shown for clarity.

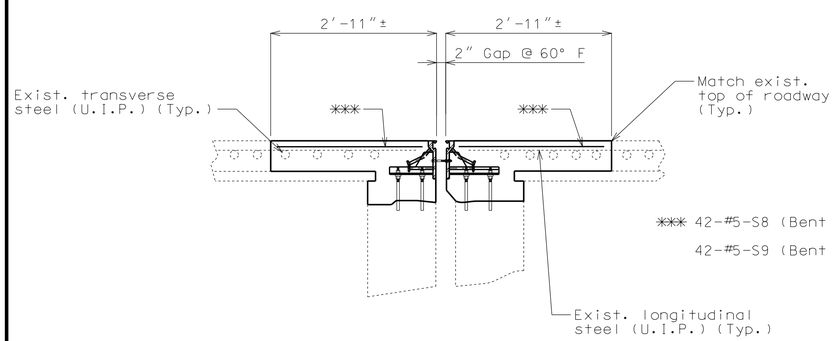

PART SECTION THRU
EXPANSION DEVICE @
INT. BENTS NO. 8 & 13
SHOWING REINFORCEMENT

Notes:

Bent No. 8 skew = 20°

Bent No. 13 skew = 44°07'23"

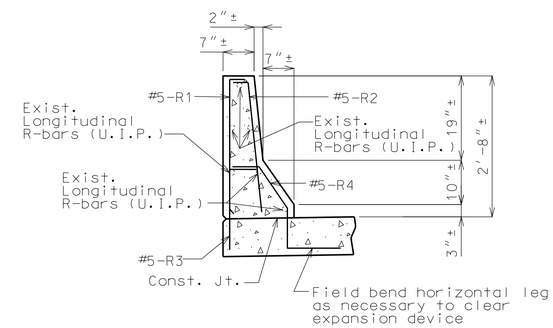

PART SECTION B-B

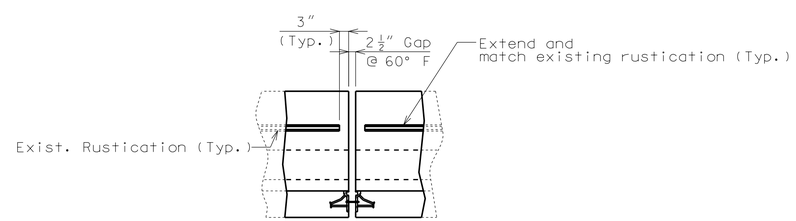

PART ELEVATION SHOWING PARTIAL
SAFETY BARRIER CURB REPLACEMENT

Note: Strip seal gland not shown for clarity.

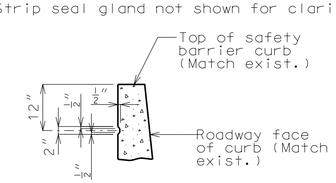

PART SECTION SHOWING
RUSTICATION DETAILS

Notes:

Remove existing stirrups within limits of Barrier Curb Removal.

All exposed edges of new barrier curb shall match existing barrier curb.

Payment for concrete curb removal and all new concrete and reinforcement for barrier curb, complete-in-place, will be considered completely covered by the contract unit price for Remove and Replace Barrier Curb per linear foot.

Detailed Oct. 2013
Checked Oct. 2013

Note: This drawing is not to scale. Follow dimensions.

"THIS MEDIA SHOULD NOT BE CONSIDERED A CERTIFIED DOCUMENT."

DATE PREPARED	11/12/2013
ROUTE	71
STATE	MO
DISTRICT	BR
SHEET NO.	8
COUNTY	JACKSON
JOB NO.	J4P2191
CONTRACT ID.	
PROJECT NO.	
BRIDGE NO.	A27331

DESCRIPTION

DATE

MISSOURI HIGHWAYS AND TRANSPORTATION COMMISSION
105 WEST CAPITOL
JEFFERSON CITY, MO 65102
1-888-ASK-MODOT (1-888-275-6636)

IF A SEAL IS PRESENT ON THIS SHEET IT HAS BEEN ELECTRONICALLY SEALED AND DATED.

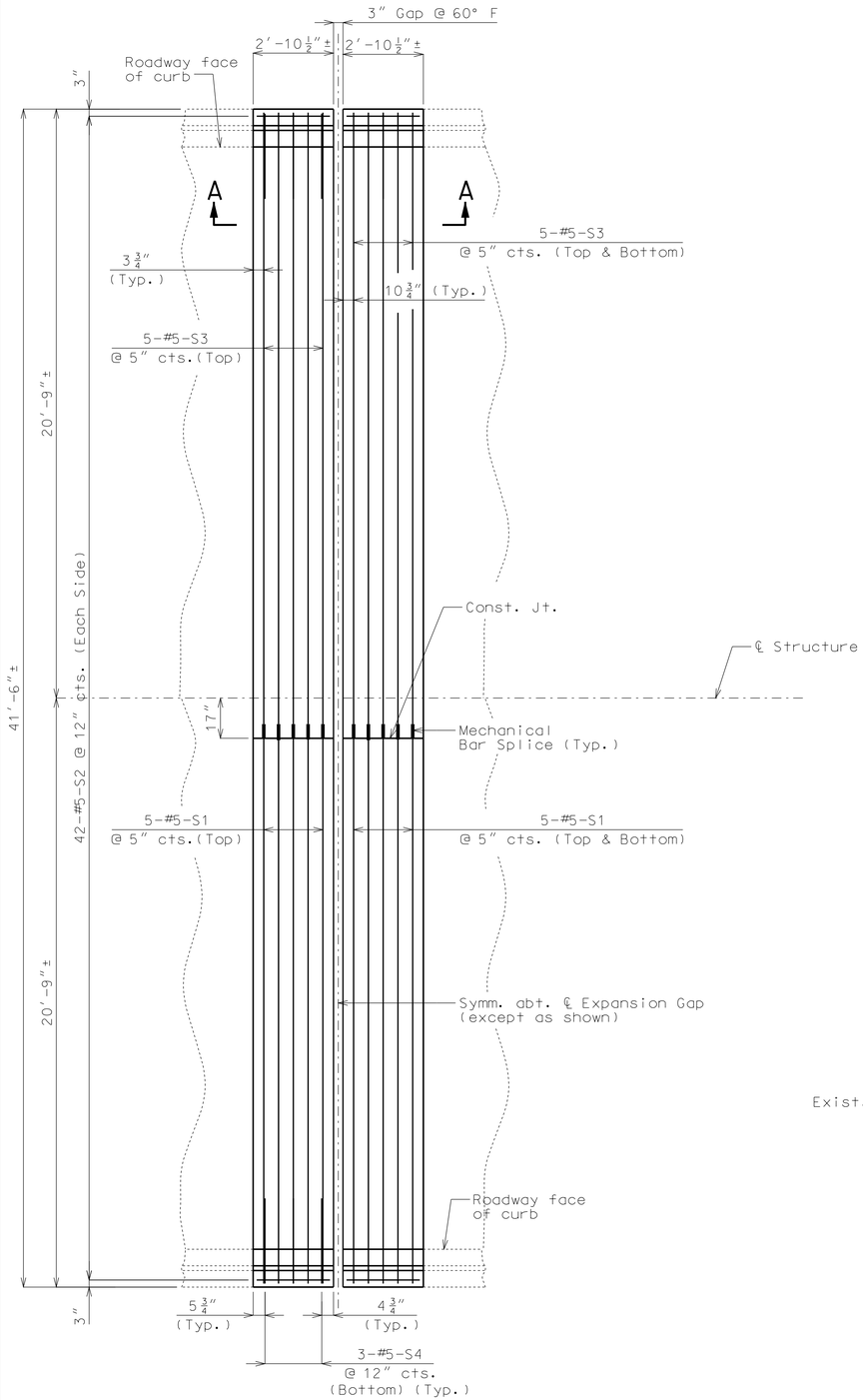

PART PLAN OF SLAB @ INT. BENT NO. 17
SHOWING REINFORCEMENT

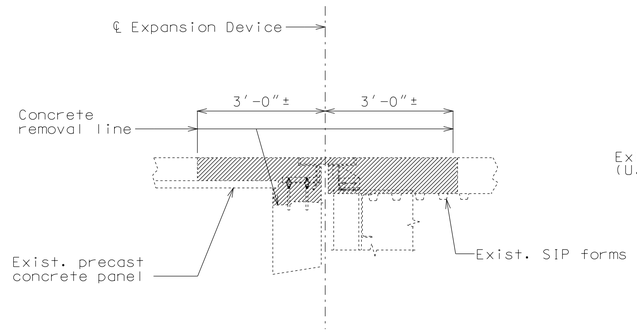

PART SECTION THRU
EXPANSION DEVICE @
INT. BENT NO. 17
SHOWING REMOVAL

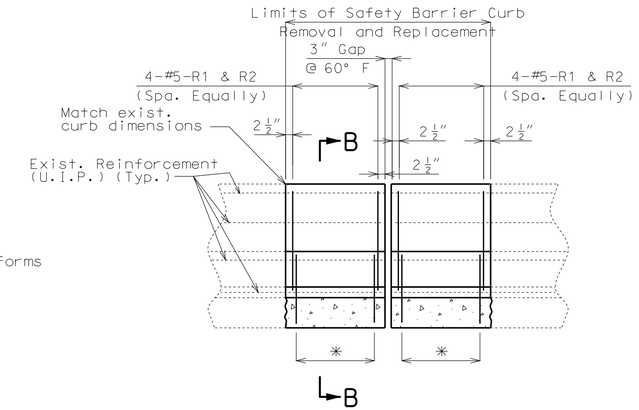

✳ 4-#5-R3 & R4 spaced with #5-R1 & R2

PART ELEVATION SHOWING
SAFETY BARRIER CURB REINFORCEMENT
AT INTERMEDIATE BENT NO. 17

Note: Expansion device not shown for clarity.

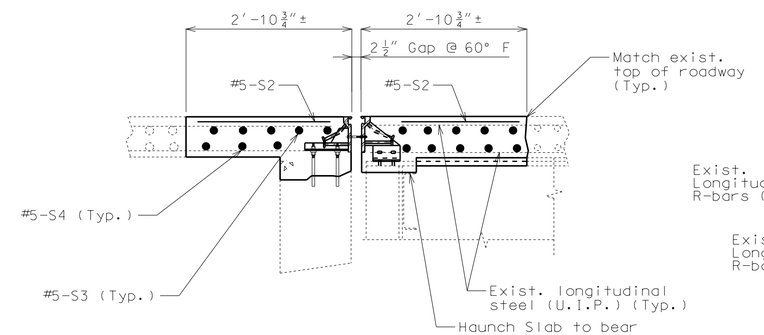

SECTION A-A

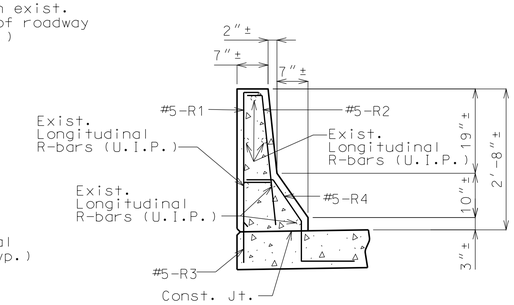

PART SECTION B-B

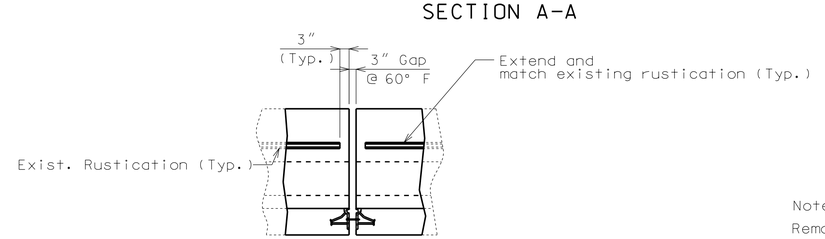

PART ELEVATION SHOWING PARTIAL
SAFETY BARRIER CURB REPLACEMENT

Note: Strip seal gland not shown for clarity.

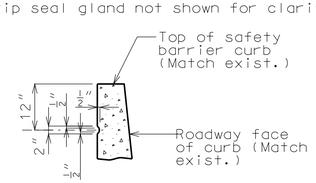

PART SECTION SHOWING
RUSTICATION DETAILS

Notes:

Remove existing stirrups within limits of Barrier Curb Removal.

All exposed edges of new barrier curb shall match existing barrier curb.

Payment for concrete curb removal and all new concrete and reinforcement for barrier curb, complete-in-place, will be considered completely covered by the contract unit price for Remove and Replace Barrier Curb per linear foot.

Shift S-bars where necessary to clear the expansion device.

The contractor shall use a mechanical bar splice for #5-S1 & #5-S3 bars at the specified location. The total bar lengths for bars indicated in the bill of reinforcing steel are determined based on the end of the bars being located flush to the face of the construction joint. No additional payment will be made for any additional bar lengths required for the mechanical bar splices. Mechanical bar splices shall be in accordance with Sec 706 except that no measurement will be made for mechanical bar splice and will be considered completely covered by the contract unit price for the reinforcing steel.

"THIS MEDIA SHOULD NOT BE CONSIDERED A CERTIFIED DOCUMENT."

DATE PREPARED	12/9/2013
ROUTE	71
STATE	MO
DISTRICT	BR
SHEET NO.	9
COUNTY	JACKSON
JOB NO.	J4P2191
CONTRACT ID.	
PROJECT NO.	
BRIDGE NO.	A27331

DESCRIPTION

DATE

MISSOURI HIGHWAYS AND TRANSPORTATION COMMISSION

105 WEST CAPITOL
JEFFERSON CITY, MO 65102
1-888-ASK-MODOT (1-888-275-6636)

IF A SEAL IS PRESENT ON THIS SHEET IT HAS BEEN ELECTRONICALLY SEALED AND DATED.

Detailed Oct. 2013
Checked Oct. 2013

Note: This drawing is not to scale. Follow dimensions.

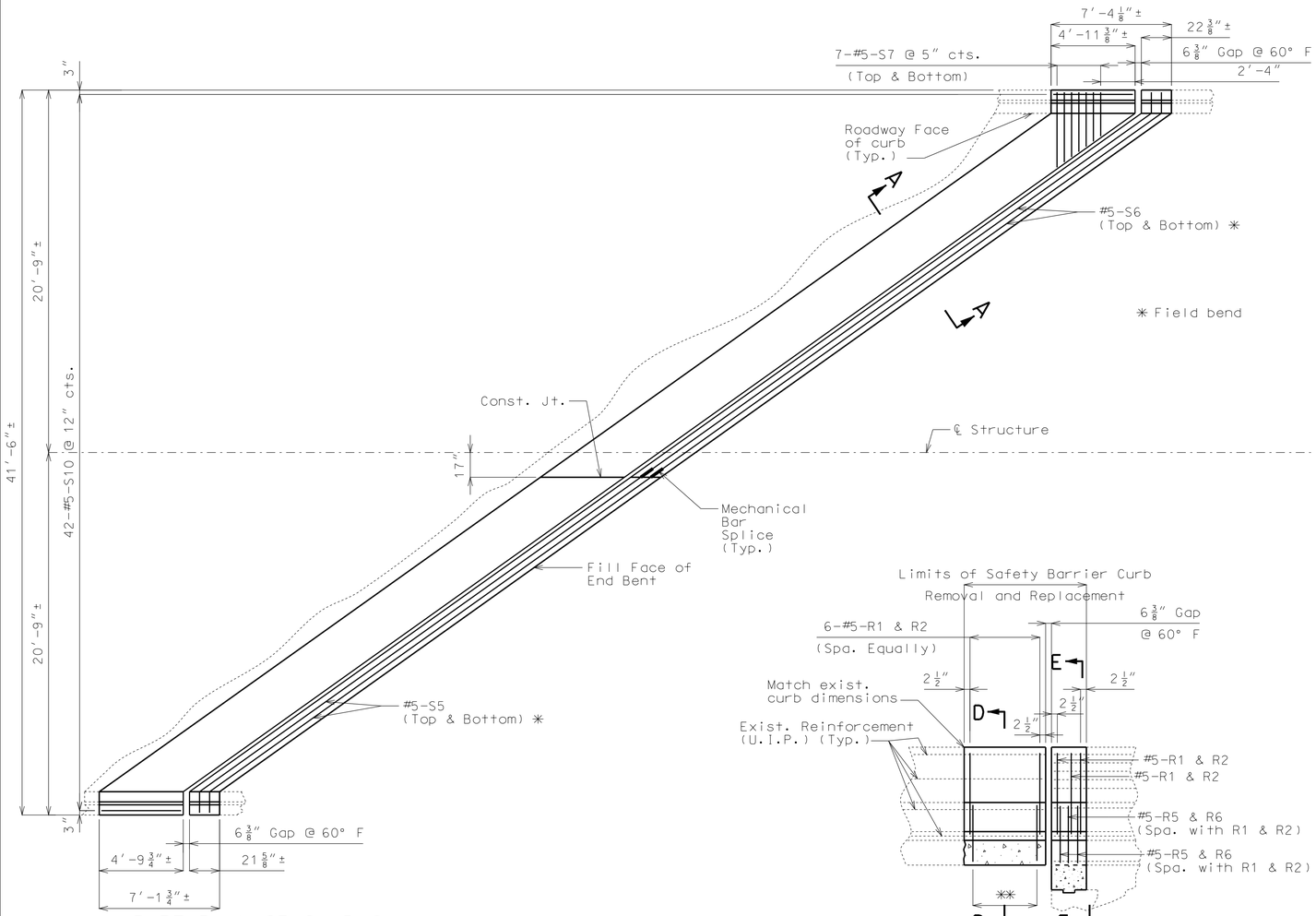

PART PLAN OF SLAB @
END BENT NO. 21
SHOWING REINFORCEMENT

Note: Existing reinforcement and expansion device not shown for clarity.

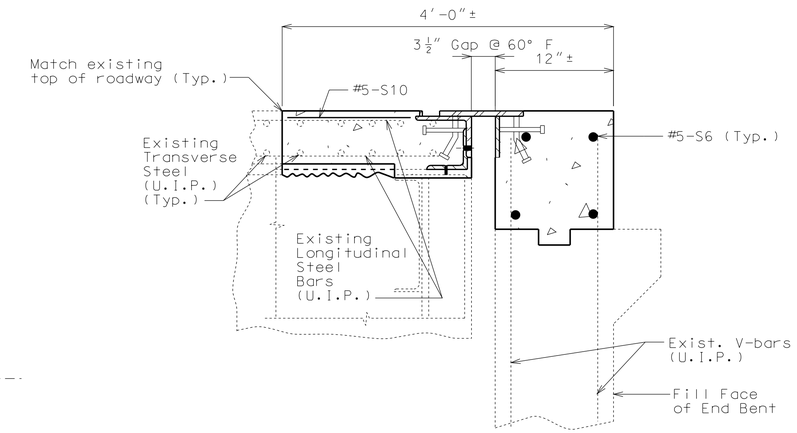

SECTION A-A

PART ELEVATION SHOWING
SAFETY BARRIER CURB REINFORCEMENT
AT END BENT NO. 21

Notes: Rustication and expansion device not shown for clarity.
For rustication details, see Sheet No. 7.

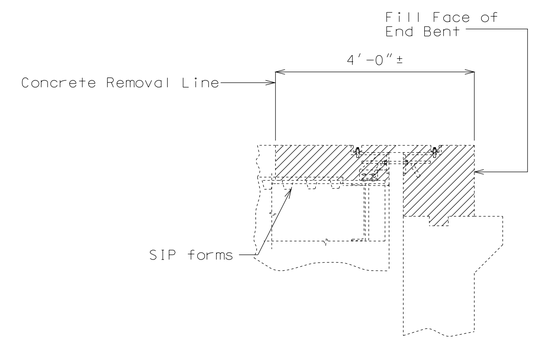

PART SECTION THRU END BENT NO. 21
SHOWING REMOVAL

Notes:

For details of expansion device not shown, see Sheet No. 6.

Shift S-bars where necessary to clear the expansion device.

Remove existing stirrups within limits of Safety Barrier Removal.

All exposed edges of new barrier curb shall match existing barrier curb.

Payment for concrete curb removal and all new concrete and reinforcement for barrier curb, complete-in-place, will be considered completely covered by the contract unit price for Remove and Replace Barrier Curb per linear foot.

The contractor shall use a mechanical bar splice for #5-S5 & #5-S6 bars at the specified location. The total bar lengths for bars indicated in the bill of reinforcing steel are determined based on the end of the bars being located flush to the face of the construction joint. No additional payment will be made for any additional bar lengths required for the mechanical bar splices. Mechanical bar splices shall be in accordance with Sec 706 except that no measurement will be made for mechanical bar splice and will be considered completely covered by the contract unit price for the reinforcing steel.

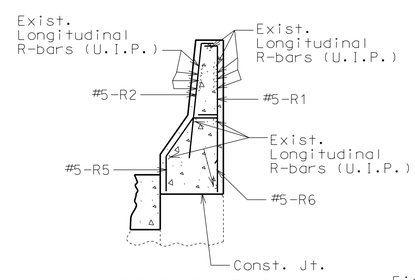

SECTION E-E

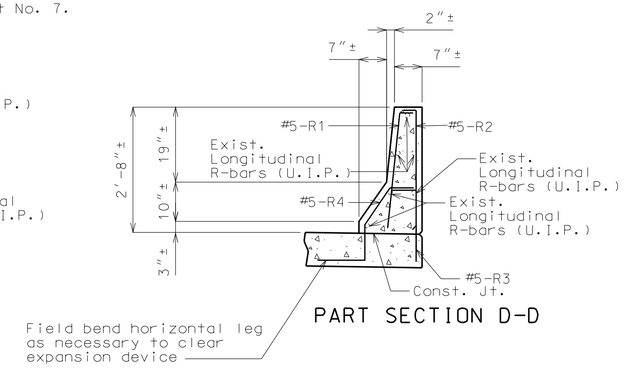

PART SECTION D-D

Detailed Oct. 2013
Checked Oct. 2013

Note: This drawing is not to scale. Follow dimensions.

"THIS MEDIA SHOULD NOT BE CONSIDERED A CERTIFIED DOCUMENT."

DATE PREPARED	
12/9/2013	
ROUTE 71	STATE MO
DISTRICT BR	SHEET NO. 10
COUNTY JACKSON	
JOB NO. J4P2191	
CONTRACT ID.	
PROJECT NO.	
BRIDGE NO. A27331	

DATE	DESCRIPTION

MISSOURI HIGHWAYS AND TRANSPORTATION COMMISSION
105 WEST CAPITOL
JEFFERSON CITY, MO 65102
1-888-ASK-MODOT (1-888-275-6636)

IF A SEAL IS PRESENT ON THIS SHEET IT HAS BEEN ELECTRONICALLY SEALED AND DATED.

BILL OF REINFORCING STEEL

NO. REQ'D.	MARK NO. SIZE	MARK NO. MARK	LOCATION	EPOXY (E)	SHAPE NO.	STIRRUP (S)	SUBSTR. (X)	VARIES (V)	NO. EACH	B FT.	B IN.	C FT.	C IN.	D FT.	D IN.	E FT.	E IN.	F FT.	F IN.	H FT.	H IN.	K FT.	K IN.	NOMINAL LENGTH FT.	NOMINAL LENGTH IN.	ACTUAL LENGTH FT.	ACTUAL LENGTH IN.	WEIGHT LBS.
			SLAB																									
27	5	S1	SLAB	E	20					19	2.000													19	2	19	2	540
168	5	S2	SLAB	E	20					2	8.000													2	8	2	8	467
25	5	S3	SLAB	E	20					22	0.000													22	0	22	0	574
42	5	S4	SLAB	E	20					3	7.000													3	7	3	7	157
4	5	S5	SLAB	E	20					34	1.000													34	1	34	1	142
4	5	S6	SLAB	E	20					38	8.000													38	8	38	8	161
14	5	S7	SLAB	E	20			V	2	2	7.000													2	7	2	7	
			INCREMENT =							4	3.000													4	3	4	3	50
			3.375 INCH																									
84	5	S8	SLAB	E	20					2	10.000													2	10	2	10	248
84	5	S9	SLAB	E	20					3	10.000													3	10	3	10	336
42	5	S10	SLAB	E	20					4	6.000													4	6	4	6	197
			BARRIER CURB																									
82	5	R1	BARRIER CURB	E	19	S				2	6.000	3.500												2	10	2	8	228
82	5	R2	BARRIER CURB	E	15	S				2	6.125	3.500								2	6.000	3.000		2	10	2	9	235
76	5	R3	BARRIER CURB	E	19	S					17.000	6.000												0	23	0	22	145
76	5	R4	BARRIER CURB	E	27	S						6.000		11.125		7.000		12.000		9.125		6.375		3	0	2	10	225
6	5	R5	BARRIER CURB	E	27	S						6.000		11.125		15.000				9.125		6.375		2	8	2	7	16
6	5	R6	BARRIER CURB	E	19	S				2	0.000	6.000												2	6	2	5	15
			TOTALS																									
	5			E																								3736
			TOTAL																									0
			TOTAL	E																								3736
			Slab on																									
			Girder																									
	5			E																								2872
			TOTAL																									2872
			Safety																									
			Barrier																									
			Curb																									
	5			E																								864
			TOTAL																									864

BILL OF REINFORCING STEEL

NO. REQ'D.	MARK NO. SIZE	MARK NO. MARK	LOCATION	EPOXY (E)	SHAPE NO.	STIRRUP (S)	SUBSTR. (X)	VARIES (V)	NO. EACH	B FT.	B IN.	C FT.	C IN.	D FT.	D IN.	E FT.	E IN.	F FT.	F IN.	H FT.	H IN.	K FT.	K IN.	NOMINAL LENGTH FT.	NOMINAL LENGTH IN.	ACTUAL LENGTH FT.	ACTUAL LENGTH IN.	WEIGHT LBS.

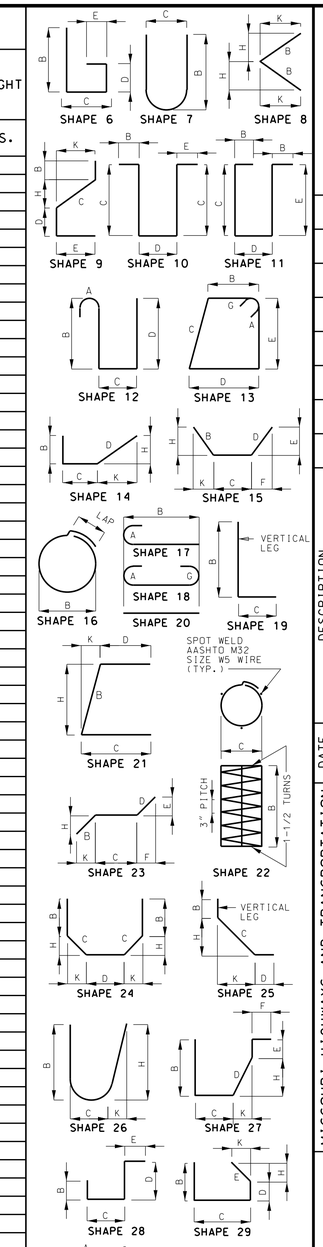

"THIS MEDIA SHOULD NOT BE CONSIDERED A CERTIFIED DOCUMENT."

DATE PREPARED	11/12/2013
ROUTE	71
STATE	MO
DISTRICT	BR
SHEET NO.	11
COUNTY	JACKSON
JOB NO.	J4P2191
CONTRACT ID.	
PROJECT NO.	
BRIDGE NO.	A27331

DATE	DESCRIPTION

IF A SEAL IS PRESENT ON THIS SHEET IT HAS BEEN ELECTRONICALLY SEALED AND DATED.

MISSOURI HIGHWAYS AND TRANSPORTATION COMMISSION

105 WEST CAPITOL
JEFFERSON CITY, MO 65102
1-888-ASK-MODOT (1-888-275-6636)

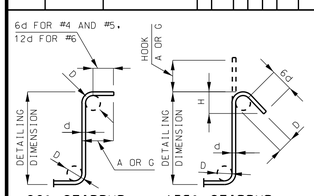

STIRRUP HOOK DIMENSIONS				
GRADES 40 - 50 - 60 KSI				
BAR SIZE	D (IN.)	90° HOOK	135° HOOK	
		HOOK A OR G	HOOK A OR G	APPROX. H
#4	2"	4 1/2"	4 1/2"	3"
#5	2 1/2"	6"	5 1/2"	3 3/4"
#6	4 1/2"	12"	8"	4 1/2"

NOTE: UNLESS OTHERWISE NOTED DIAMETER "D" IS THE SAME FOR ALL BENDS AND HOOKS ON A BAR.

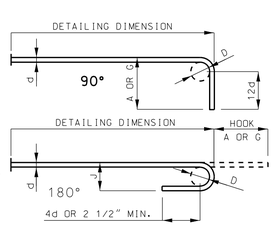

END HOOK DIMENSIONS				
BAR SIZE	D (IN.)	ALL GRADES		
		180° HOOKS		90° HOOKS
		A OR G	J	A OR G
#3	2 1/4"	5"	3"	6"
#4	3"	6"	4"	8"
#5	3 3/4"	7"	5"	10"
#6	4 1/2"	8"	6"	12"
#7	5 1/4"	10"	7"	14"
#8	6"	11"	8"	16"
#9	9 1/2"	15"	11 3/4"	19"
#10	10 3/4"	17"	13 1/4"	22"
#11	12"	19"	14 3/4"	2'-0"
#14	18 1/4"	2'-3"	21 3/4"	2'-7"

TWO ADDITIONAL #5-S1 ARE INCLUDED IN THE BAR BILL FOR TESTING.

NOTE:
ALL STANDARD HOOKS AND BENDS OTHER THAN 180 DEGREE ARE TO BE BENT WITH SAME PROCEDURE AS FOR 90 DEGREE STANDARD HOOKS.
HOOKS AND BENDS SHALL BE IN ACCORDANCE WITH THE PROCEDURES AS SHOWN ON THIS SHEET.
E = EPOXY COATED REINFORCEMENT.
S = STIRRUP.
X = BAR IS INCLUDED IN SUBSTRUCTURE QUANTITIES.
V = BAR DIMENSIONS VARY IN EQUAL INCREMENTS BETWEEN DIMENSIONS SHOWN ON THIS LINE AND THE FOLLOWING LINE.
NO. EA. = NUMBER OF BARS OF EACH LENGTH.
NOMINAL LENGTHS ARE BASED ON OUT TO OUT DIMENSIONS SHOWN IN BENDING DIAGRAMS AND ARE LISTED FOR FABRICATORS USE. (NEAREST INCH)
ACTUAL LENGTHS ARE MEASURED ALONG CENTERLINE BAR TO THE NEAREST INCH.
PAYWEIGHTS ARE BASED ON ACTUAL LENGTHS.
FOUR ANGLE OR CHANNEL SPACERS ARE REQUIRED FOR EACH COLUMN SPIRAL. SPACERS ARE TO BE PLACED ON INSIDE OF SPIRALS. LENGTH AND WEIGHT OF COLUMN SPIRALS DO NOT INCLUDE SPLICES OR SPACERS.
REINFORCING STEEL (GRADE 60) FY = 60,000 PSI.

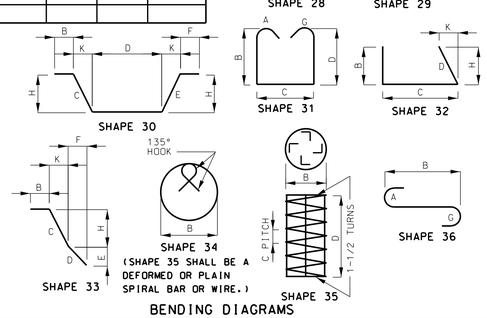

BENDING DIAGRAMS

Detailed Oct. 2013
Checked Oct. 2013

Note: This drawing is not to scale. Follow dimensions.

MISSOURI HIGHWAYS AND TRANSPORTATION COMMISSION

SEC/SUR 22 TWP 48N RGE 33W

U.I.P. AND REHABILITATE EXISTING (64'-82'-65')(65'-65'-82'-82'-82')(82'-67'-90'-90')
(79'-79'-85'-85') CONTINUOUS PRESTRESSED CONCRETE I-GIRDER SPANS, (123'-123'-93') CONTINUOUS
COMPOSITE PLATE GIRDER SPANS

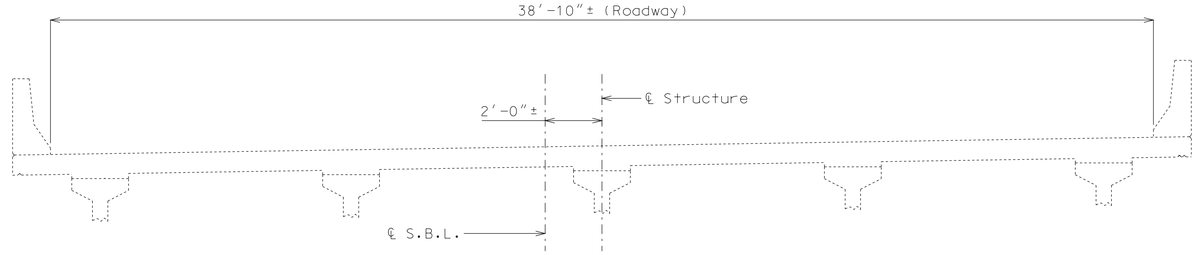

TYPICAL SECTION THRU SLAB

Note: Prestressed Concrete I-Girder spans shown, Plate Girder spans similar.

GENERAL NOTES:

Design Specifications:

2002 - AASHTO LFD (17th Edition) Standard Specifications
Bridge Deck Rating = 8

Design Loading:

HS20-44 (1983 & New Construction)
Military 24,000# Tandem Axle

Design Unit Stresses:

Class B-1 Concrete (Slab & Safety Barrier Curb) f'c = 4,000 psi

Reinforcing Steel (Grade 60) fy = 60,000 psi

Reinforcing Steel:

Minimum clearance to reinforcing steel shall be 1½", unless otherwise shown.

Expansion Joints:

The concrete for slab and barrier curb replacement shall be Class B-1.

Payment for slab concrete, complete-in-place, for expansion joint replacement will be considered completely covered by the contract unit price for Class B-1 concrete per cu. yard.

Payment for furnishing and installing slab reinforcing steel, complete-in-place, for expansion joint replacement will be considered completely covered by the contract unit price for Reinforcing Steel (Epoxy Coated).

Concrete Protective Coatings:

Protective coating for concrete bents and piers (Urethane) shall be applied as shown on the bridge plans and in accordance with Sec 711.

Miscellaneous:

Bars bonded in old concrete not removed shall be cleanly stripped and embedded into new concrete where possible. If length is available, old bars shall extend into new concrete at least 40 diameters for smooth bars and 30 diameters for deformed bars, unless otherwise noted.

Outline of old work is indicated by light dashed lines. Heavy lines indicate new work.

Contractor shall verify all dimensions in field before ordering new material.

The area exposed by the removal of concrete and not covered with new concrete shall be coated with an approved qualified special mortar in accordance with Sec 704.

Traffic Handling:

See Sheet No. 2 for Details of Stage Construction and Roadway Plans for Traffic Control.

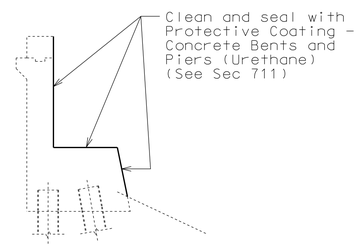

TYPICAL SECTION THRU
END BENT NO. 20 SHOWING
PROTECTIVE COATING

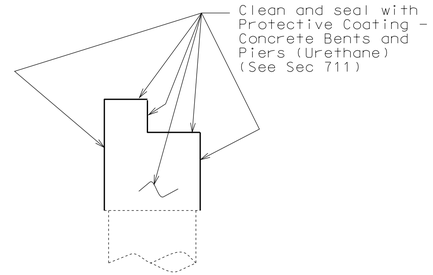

PART ELEVATION OF
INT. BENT NO. 17 SHOWING
PROTECTIVE COATING

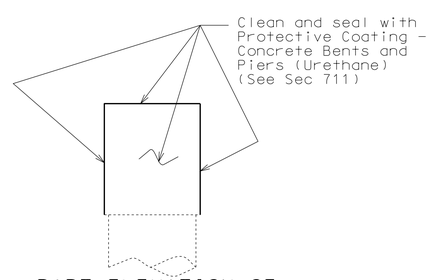

PART ELEVATION OF
INT. BENTS NO. 4, 9 & 13 SHOWING
PROTECTIVE COATING

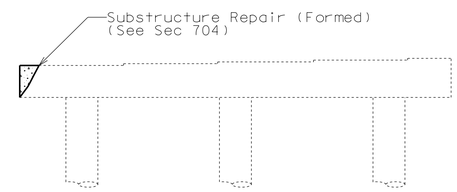

PART ELEVATION OF INTERMEDIATE BENTS NO.
4, 9, 13 & 17 SHOWING SUBSTRUCTURE
REPAIR (FORMED)

Note:

Bent No. 17, Girder No. 1, southeast corner shall be supported during the substructure repair. Required temporary support load of 80 kips is a service load without a factor of safety. It includes a construction load of 50 psf and assumes traffic loads are shifted away from the supported girder.

Estimated Quantities

Item		Total
Removal of Existing Expansion Joints & Adjacent Concrete	linear foot	250
Remove and Replace Barrier Curb	linear foot	64
Class B-1 Concrete	cu. yard	49.1
Temporary Falsework	lump sum	1
Substructure Repair (Formed)	sq. foot	190
Reinforcing Steel (Epoxy Coated)	pound	2920
Protective Coating - Concrete Bents & Piers (Urethane)	lump sum	1
Expansion Device (Flat Plate)	linear foot	76
Strip Seal Expansion Joint System	linear foot	173

REPAIRS TO BRIDGE: RTE. 71 SB OVER
85th STREET, BLUE RIVER,
BLUE RIVER ROAD & HICKMAN MILLS DR.

STATE ROAD FROM I-435 NORTH TO BLUE RIVER RD.

AT BLUE RIVER RD.

STA. 512+80.63± (MATCH EXISTING)

STD. 617.20
STD. 706.35

Detailed Oct. 2013
Checked Oct. 2013

Note: This drawing is not to scale. Follow dimensions.

"THIS MEDIA SHOULD NOT BE CONSIDERED A CERTIFIED DOCUMENT."

DATE PREPARED	
11/12/2013	
ROUTE 71	STATE MO
DISTRICT BR	SHEET NO. 1
COUNTY JACKSON	
JOB NO. J4P2191	
CONTRACT ID.	
PROJECT NO.	
BRIDGE NO. A27452	

DATE	DESCRIPTION

MISSOURI HIGHWAYS AND TRANSPORTATION COMMISSION
105 WEST CAPITOL
JEFFERSON CITY, MO 65102
1-888-ASK-MODOT (1-888-275-6636)

IF A SEAL IS PRESENT ON THIS SHEET IT HAS BEEN ELECTRONICALLY SEALED AND DATED.

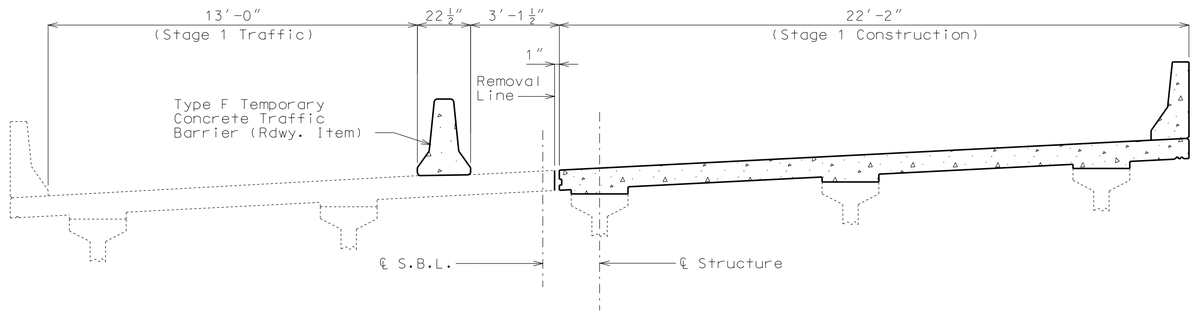

STAGE 1 CONSTRUCTION

(Prestressed girders shown, plate girders similar)

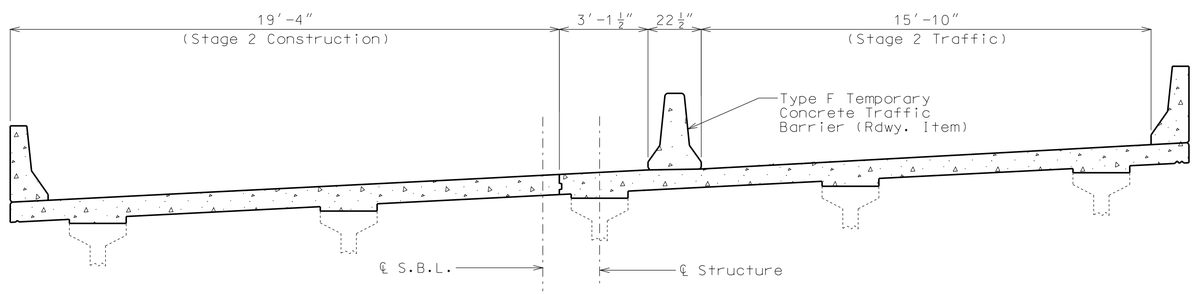

STAGE 2 CONSTRUCTION

(Prestressed girders shown, plate girders similar)

Note:

Temporary Barrier shall not be attached to the bridge.

DETAILS OF STAGE CONSTRUCTION

Detailed Oct. 2013
Checked Oct. 2013

Note: This drawing is not to scale. Follow dimensions.

"THIS MEDIA SHOULD NOT BE CONSIDERED A CERTIFIED DOCUMENT."

DATE PREPARED	11/12/2013
ROUTE	71
STATE	MO
DISTRICT	BR
SHEET NO.	2
COUNTY	JACKSON
JOB NO.	J4P2191
CONTRACT ID.	
PROJECT NO.	
BRIDGE NO.	A27452

DATE	DESCRIPTION

MISSOURI HIGHWAYS AND TRANSPORTATION COMMISSION

105 WEST CAPITOL
JEFFERSON CITY, MO 65102
1-888-ASK-MODOT (1-888-275-6636)

IF A SEAL IS PRESENT ON THIS SHEET IT HAS BEEN ELECTRONICALLY SEALED AND DATED.

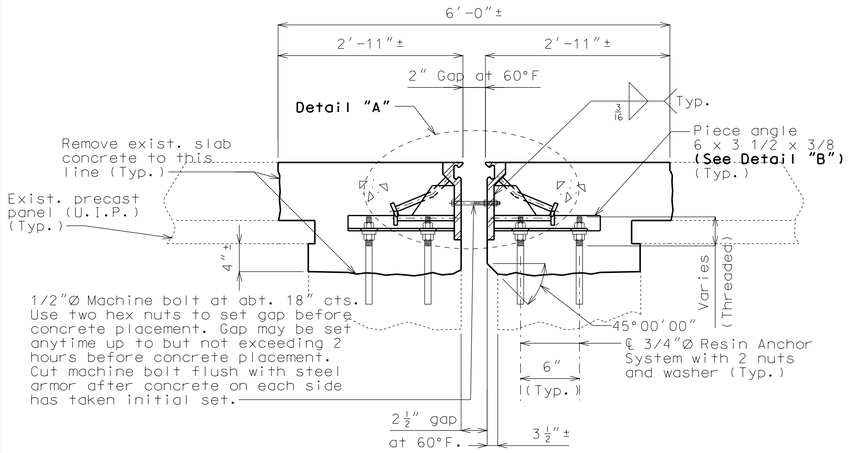

SECTION A-A

Note: Strip seal gland not shown for clarity.

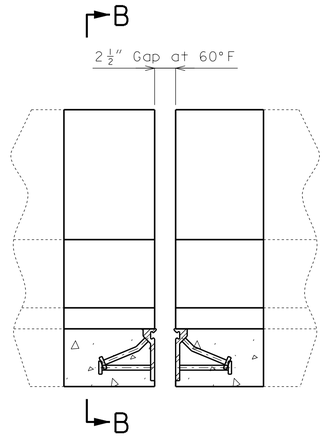

Note: Strip seal gland not shown for clarity.

PART ELEVATION OF BARRIER CURB

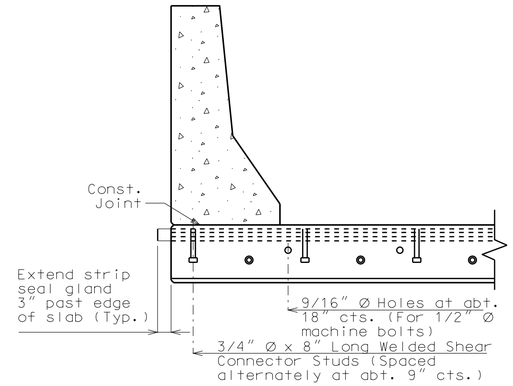

PART SECTION B-B

GENERAL NOTES:

Expansion joint system shall be fabricated in one section, except for stage construction and when the length is over 50 feet. A complete joint penetration groove welded splice shall be required. Welds shall be ground flush to provide a smooth surface. The expansion joint system shall be fabricated and installed to the crown and grade of the roadway.

The strip seal gland shall be installed in joints in one continuous piece without field splices. Factory splicing will be permitted for joints in excess of 53 feet.

Structural steel for the expansion joint system shall be ASTM A709 Grade 36 except the steel armor may be ASTM A709 Grade 50W. Anchors for the expansion joint system shall be in accordance with Sec 1037. Strip seal expansion joint system shall be in accordance with Sec 717.

Structural steel for the expansion joint system shall be coated with a minimum of two coats of inorganic zinc primer (5 mils minimum) or galvanized in accordance with ASTM A123. Anchors need not be protected from overspray.

Plan dimensions are based on installation at 60°F. The expansion gap and other dimensions shall be increased or decreased 1/4" for each 10° fall or rise in temperature at installation.

New longitudinal reinforcing steel shall be placed and exist. longitudinal reinforcing steel shall be cut/bent so that ends shall not be more than ±1" from vertical leg of the steel armor at the expansion joint system.

Concrete shall be forced under and around steel armor and anchors. Proper consolidation of the concrete shall be achieved by localized internal vibration.

The contractor shall use one of the qualified resin anchor systems in accordance with Sec 1039.

Cost of furnishing and installing the resin anchor system, complete in place, will be considered completely covered by the contract unit price for Strip Seal Expansion Joint System.

The minimum embedment depth in concrete with f'c = 4,000 psi for the resin anchor system shall be that required to meet the minimum ultimate pullout strength in accordance with Sec 1039 but shall not be less than 5".

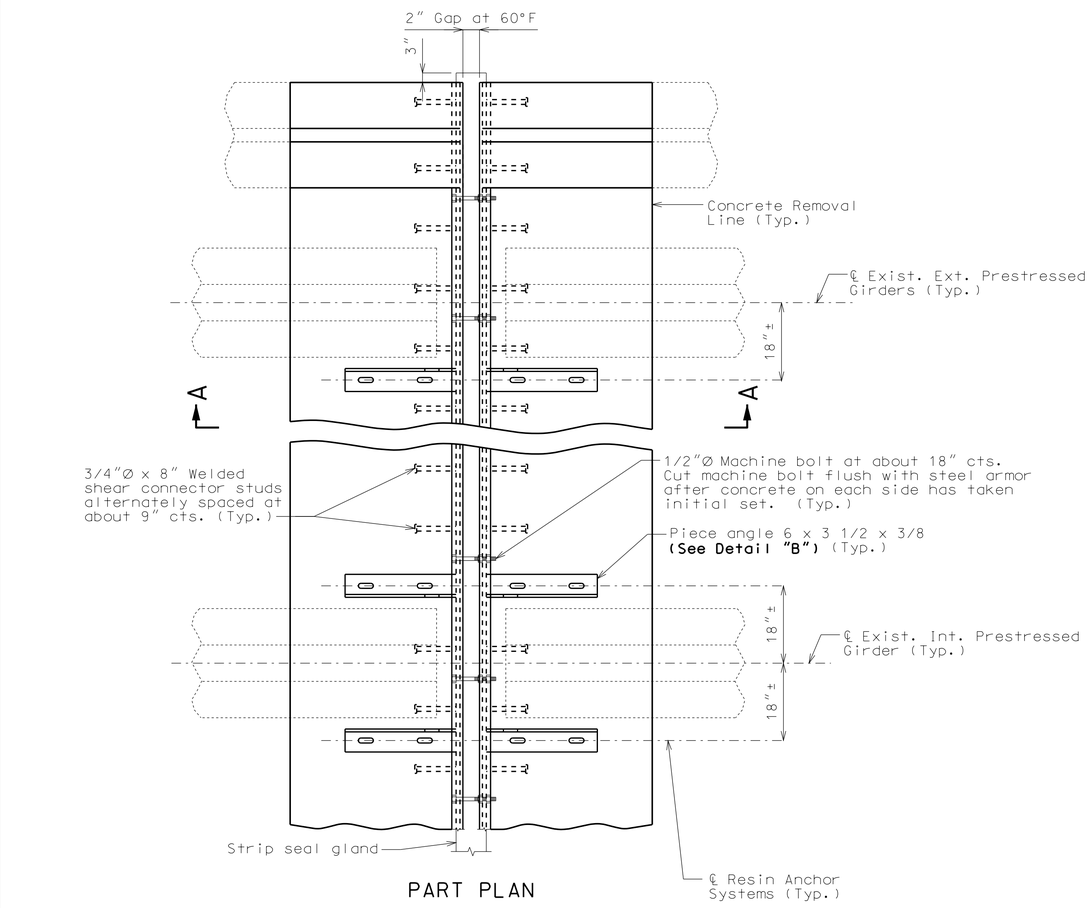

PART PLAN

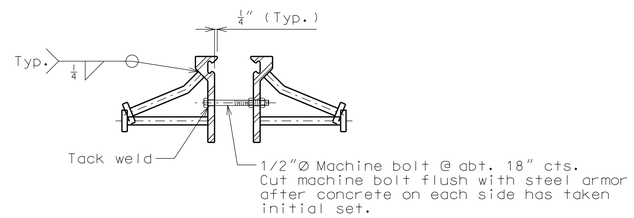

DETAIL "A"

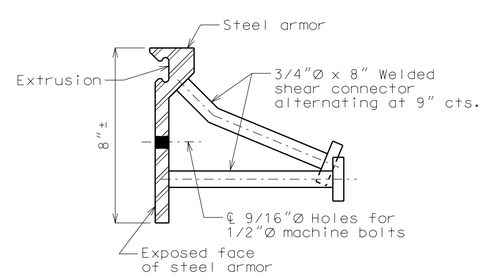

DETAIL OF JOINT ARMOR

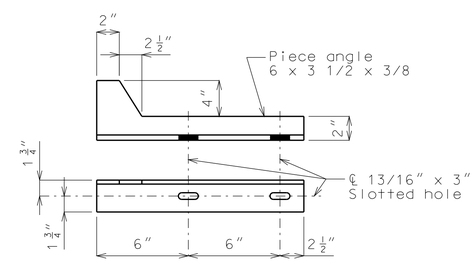

DETAIL "B"

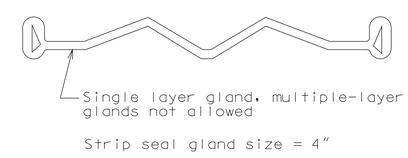

Strip seal gland size = 4"

DETAIL OF GLAND

DETAILS OF STRIP SEAL AT INTERMEDIATE BENT NO. 4

Detailed Oct. 2013
Checked Oct. 2013

Note: This drawing is not to scale. Follow dimensions.

"THIS MEDIA SHOULD NOT BE CONSIDERED A CERTIFIED DOCUMENT."

DATE PREPARED	
11/12/2013	
ROUTE 71	STATE MO
DISTRICT BR	SHEET NO. 3
COUNTY JACKSON	
JOB NO. J4P2191	
CONTRACT ID.	
PROJECT NO.	
BRIDGE NO. A27452	

DATE	DESCRIPTION

MISSOURI HIGHWAYS AND TRANSPORTATION COMMISSION
105 WEST CAPITOL
JEFFERSON CITY, MO 65102
1-888-ASK-MODOT (1-888-275-6636)

IF A SEAL IS PRESENT ON THIS SHEET IT HAS BEEN ELECTRONICALLY SEALED AND DATED.

REV.

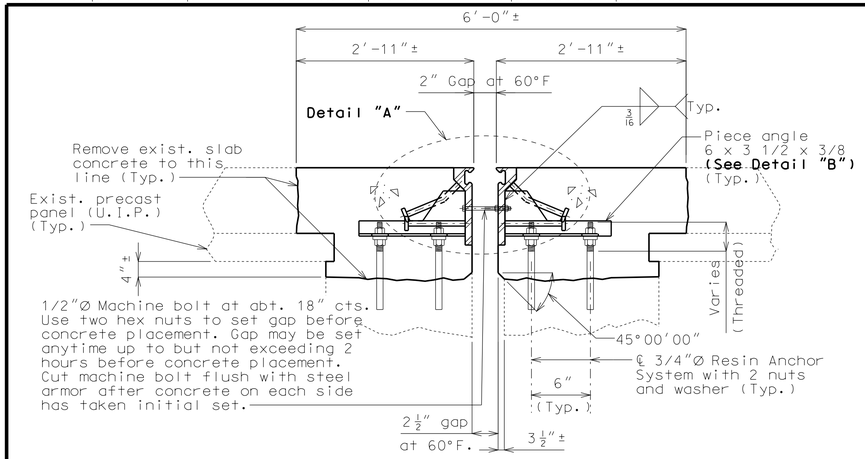

SECTION A-A

Note: Strip seal gland not shown for clarity.

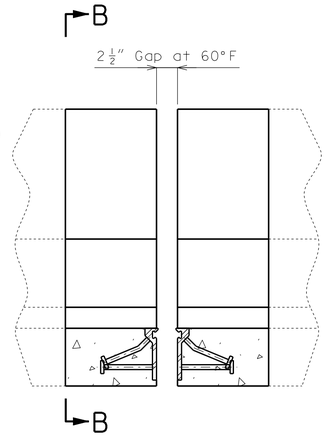

Note: Strip seal gland not shown for clarity.

PART ELEVATION OF BARRIER CURB

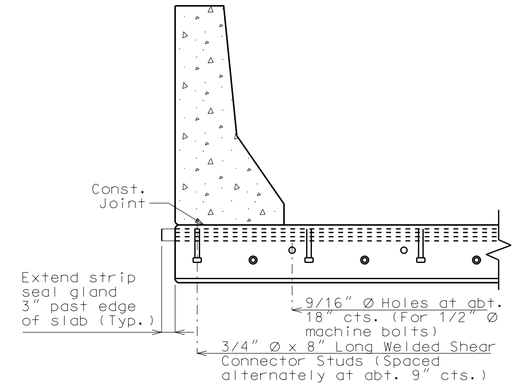

PART SECTION B-B

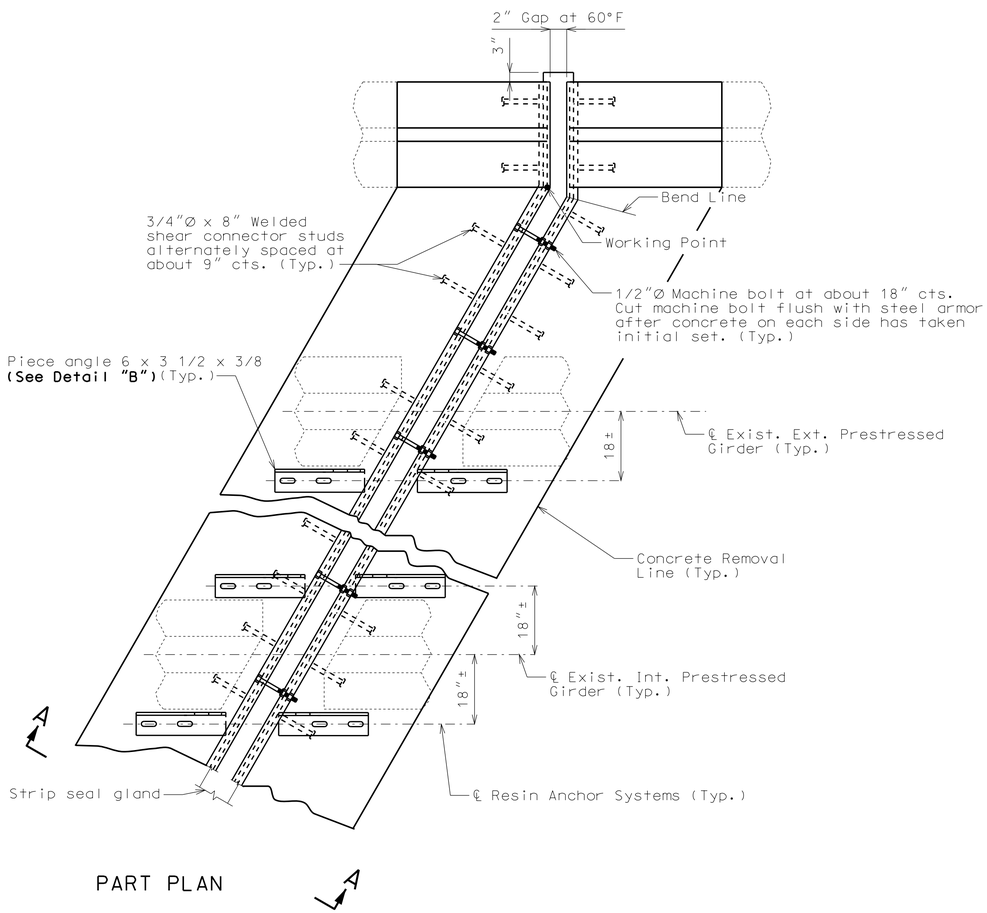

PART PLAN

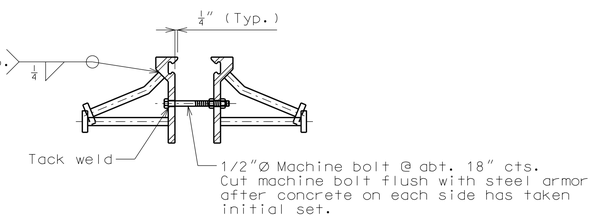

DETAIL "A"

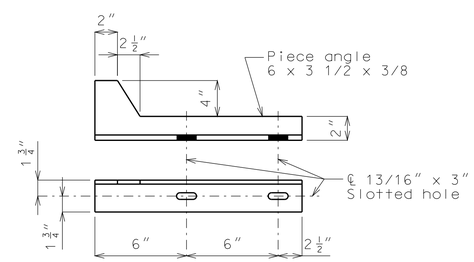

DETAIL "B"

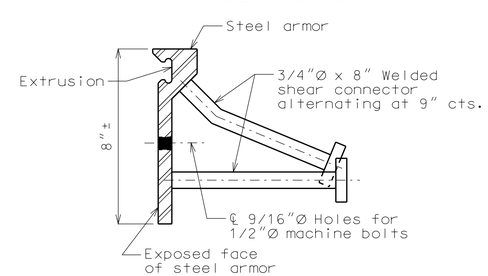

DETAIL OF JOINT ARMOR

Strip seal gland size = 4"

DETAIL OF GLAND

GENERAL NOTES:

Expansion joint system shall be fabricated in one section, except for stage construction and when the length is over 50 feet. A complete joint penetration groove welded splice shall be required. Welds shall be ground flush to provide a smooth surface. The expansion joint system shall be fabricated and installed to the crown and grade of the roadway.

The strip seal gland shall be installed in joints in one continuous piece without field splices. Factory splicing will be permitted for joints in excess of 53 feet.

Structural steel for the expansion joint system shall be ASTM A709 Grade 36 except the steel armor may be ASTM A709 Grade 50W. Anchors for the expansion joint system shall be in accordance with Sec 1037. Strip seal expansion joint system shall be in accordance with Sec 717.

Structural steel for the expansion joint system shall be coated with a minimum of two coats of inorganic zinc primer (5 mils minimum) or galvanized in accordance with ASTM A123. Anchors need not be protected from overspray.

Plan dimensions are based on installation at 60°F. The expansion gap and other dimensions shall be increased or decreased 1/4" for each 10° fall or rise in temperature at installation.

New longitudinal reinforcing steel shall be placed and exist. longitudinal reinforcing steel shall be cut/bent so that ends shall not be more than ±1" from vertical leg of the steel armor at the expansion joint system.

Concrete shall be forced under and around steel armor and anchors. Proper consolidation of the concrete shall be achieved by localized internal vibration.

The contractor shall use one of the qualified resin anchor systems in accordance with Sec 1039.

Cost of furnishing and installing the resin anchor system, complete in place, will be considered completely covered by the contract unit price for Strip Seal Expansion Joint System.

The minimum embedment depth in concrete with f'c = 4,000 psi for the resin anchor system shall be that required to meet the minimum ultimate pullout strength in accordance with Sec 1039 but shall not be less than 5".

"THIS MEDIA SHOULD NOT BE CONSIDERED A CERTIFIED DOCUMENT."

DATE PREPARED	
11/12/2013	
ROUTE 71	STATE MO
DISTRICT BR	SHEET NO. 4
COUNTY JACKSON	
JOB NO. J4P2191	
CONTRACT ID.	
PROJECT NO.	
BRIDGE NO. A27452	

DESCRIPTION	DATE

MISSOURI HIGHWAYS AND TRANSPORTATION COMMISSION

105 WEST CAPITOL
JEFFERSON CITY, MO 65102
1-888-ASK-MODOT (1-888-275-6636)

IF A SEAL IS PRESENT ON THIS SHEET IT HAS BEEN ELECTRONICALLY SEALED AND DATED.

DETAILS OF STRIP SEAL AT INTERMEDIATE BENT NO. 9

Detailed Oct. 2013
Checked Oct. 2013

Note: This drawing is not to scale. Follow dimensions.

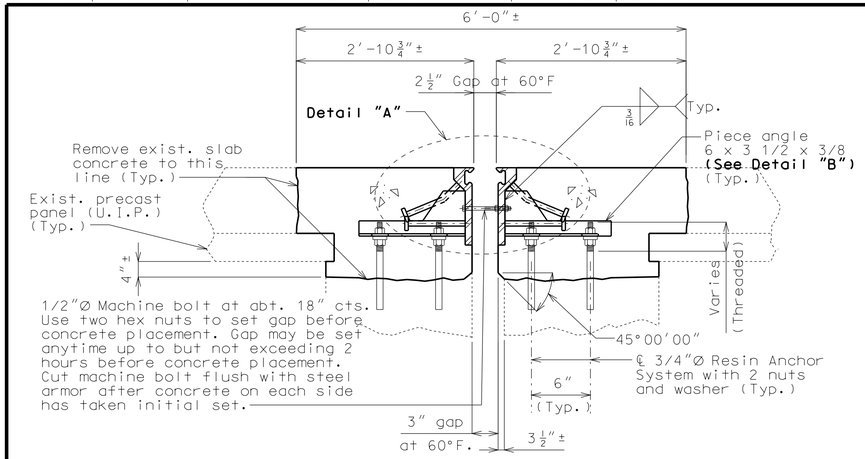

SECTION A-A

Note: Strip seal gland not shown for clarity.

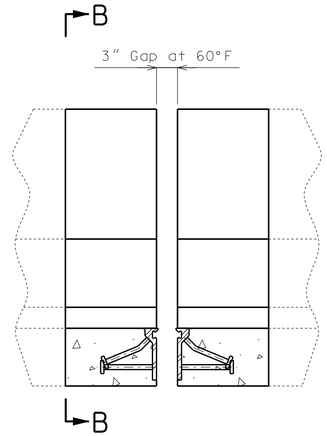

Note: Strip seal gland not shown for clarity.

PART ELEVATION OF BARRIER CURB

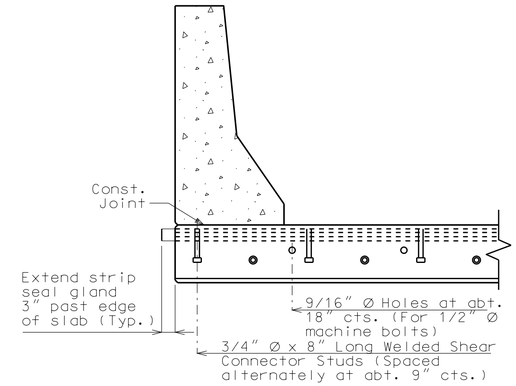

PART SECTION B-B

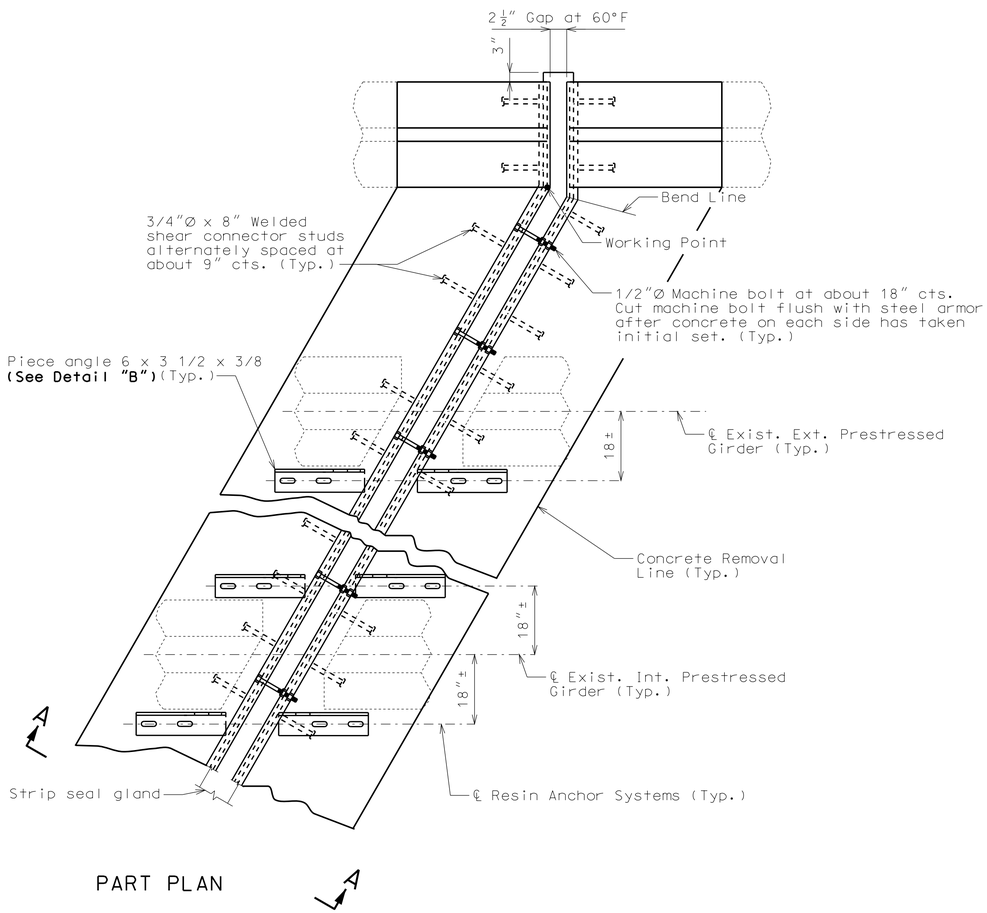

PART PLAN

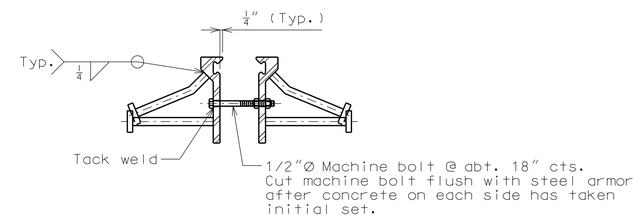

DETAIL "A"

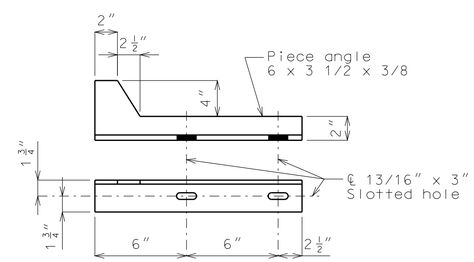

DETAIL "B"

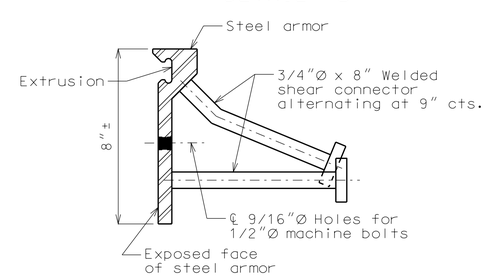

DETAIL OF JOINT ARMOR

Strip seal gland size = 5"

DETAIL OF GLAND

GENERAL NOTES:

Expansion joint system shall be fabricated in one section, except for stage construction and when the length is over 50 feet. A complete joint penetration groove welded splice shall be required. Welds shall be ground flush to provide a smooth surface. The expansion joint system shall be fabricated and installed to the crown and grade of the roadway.

The strip seal gland shall be installed in joints in one continuous piece without field splices. Factory splicing will be permitted for joints in excess of 53 feet.

Structural steel for the expansion joint system shall be ASTM A709 Grade 36 except the steel armor may be ASTM A709 Grade 50W. Anchors for the expansion joint system shall be in accordance with Sec 1037. Strip seal expansion joint system shall be in accordance with Sec 717.

Structural steel for the expansion joint system shall be coated with a minimum of two coats of inorganic zinc primer (5 mils minimum) or galvanized in accordance with ASTM A123. Anchors need not be protected from overspray.

Plan dimensions are based on installation at 60°F. The expansion gap and other dimensions shall be increased or decreased 3/16" for each 10° fall or rise in temperature at installation.

New longitudinal reinforcing steel shall be placed and exist. longitudinal reinforcing steel shall be cut/bent so that ends shall not be more than ±1" from vertical leg of the steel armor at the expansion joint system.

Concrete shall be forced under and around steel armor and anchors. Proper consolidation of the concrete shall be achieved by localized internal vibration.

The contractor shall use one of the qualified resin anchor systems in accordance with Sec 1039.

Cost of furnishing and installing the resin anchor system, complete in place, will be considered completely covered by the contract unit price for Strip Seal Expansion Joint System.

The minimum embedment depth in concrete with f'c = 4,000 psi for the resin anchor system shall be that required to meet the minimum ultimate pullout strength in accordance with Sec 1039 but shall not be less than 5".

"THIS MEDIA SHOULD NOT BE CONSIDERED A CERTIFIED DOCUMENT."

DATE PREPARED	
11/12/2013	
ROUTE 71	STATE MO
DISTRICT BR	SHEET NO. 5
COUNTY JACKSON	
JOB NO. J4P2191	
CONTRACT ID.	
PROJECT NO.	
BRIDGE NO. A27452	

DESCRIPTION	DATE

MISSOURI HIGHWAYS AND TRANSPORTATION COMMISSION

105 WEST CAPITOL
JEFFERSON CITY, MO 65102
1-888-ASK-MODOT (1-888-275-6636)

IF A SEAL IS PRESENT ON THIS SHEET IT HAS BEEN ELECTRONICALLY SEALED AND DATED.

DETAILS OF STRIP SEAL AT INTERMEDIATE BENT NO. 13

Detailed Oct. 2013
Checked Oct. 2013

Note: This drawing is not to scale. Follow dimensions.

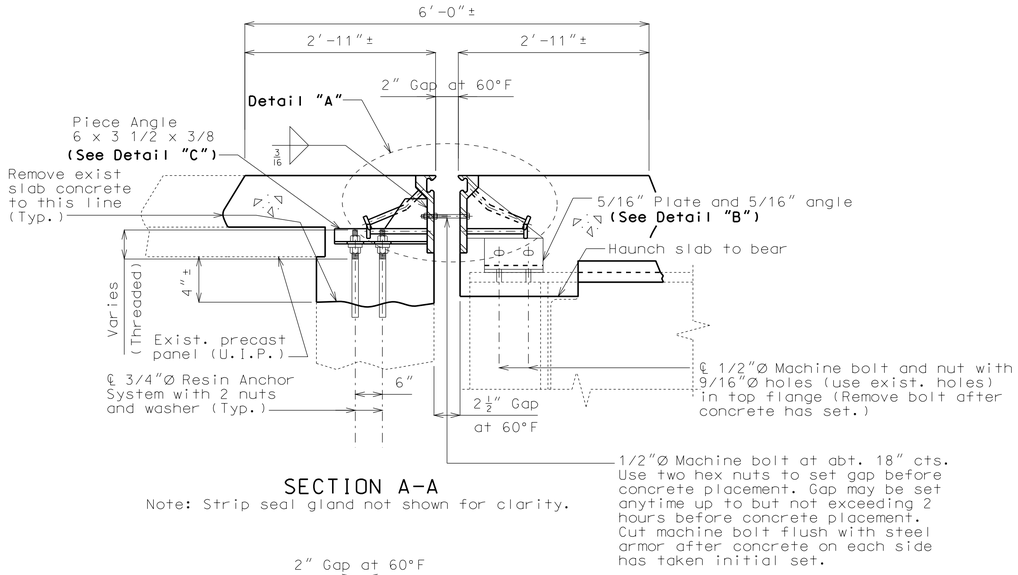

SECTION A-A

Note: Strip seal gland not shown for clarity.

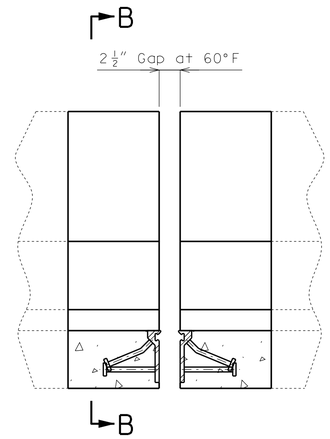

Note: Strip seal gland not shown for clarity.

PART ELEVATION OF BARRIER CURB

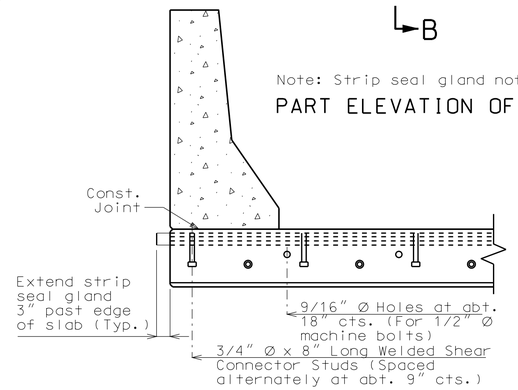

PART SECTION B-B

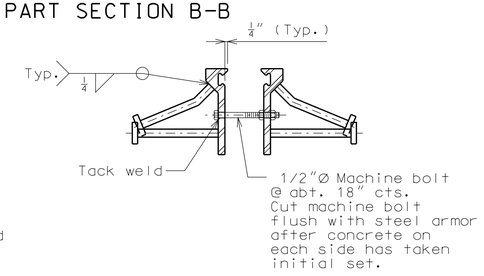

DETAIL "A"

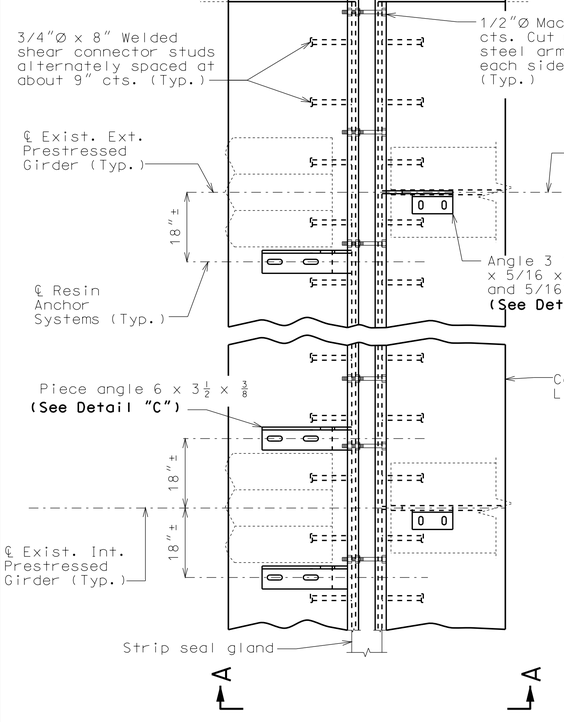

PART PLAN

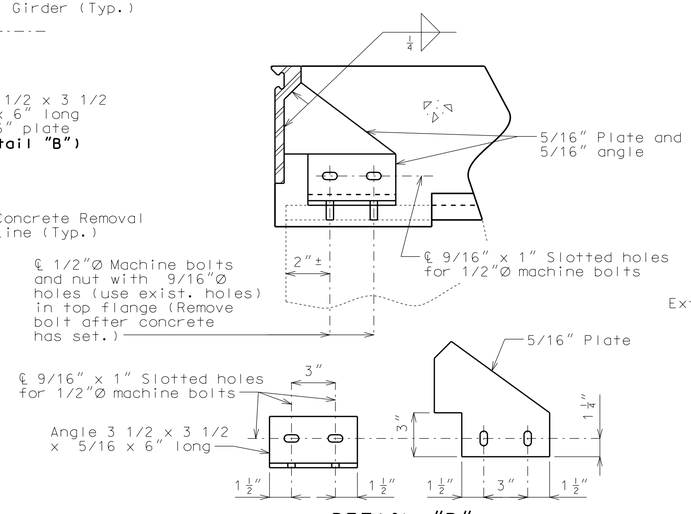

DETAIL "B"

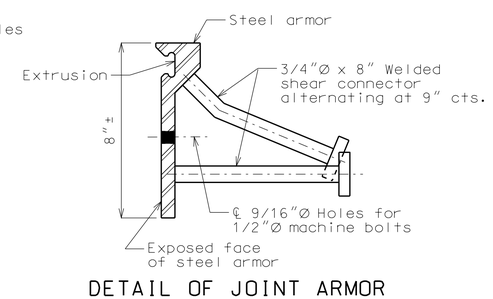

DETAIL OF JOINT ARMOR

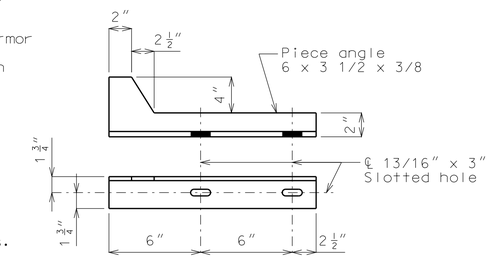

DETAIL "C"

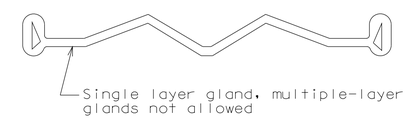

Strip seal gland size = 4"

DETAIL OF GLAND

GENERAL NOTES:

Expansion joint system shall be fabricated in one section, except for stage construction and when the length is over 50 feet. A complete joint penetration groove welded splice shall be required. Welds shall be ground flush to provide a smooth surface. The expansion joint system shall be fabricated and installed to the crown and grade of the roadway.

The strip seal gland shall be installed in joints in one continuous piece without field splices. Factory splicing will be permitted for joints in excess of 53 feet.

Structural steel for the expansion joint system shall be ASTM A709 Grade 36 except the steel armor may be ASTM A709 Grade 50W. Anchors for the expansion joint system shall be in accordance with Sec 1037. Strip seal expansion joint system shall be in accordance with Sec 717.

Structural steel for the expansion joint system shall be coated with a minimum of two coats of inorganic zinc primer (5 mils minimum) or galvanized in accordance with ASTM A123. Anchors need not be protected from overspray.

Plan dimensions are based on installation at 60°F. The expansion gap and other dimensions shall be increased or decreased 3/16" for each 10° fall or rise in temperature at installation.

New longitudinal reinforcing steel shall be placed and exist. longitudinal reinforcing steel shall be cut/bent so that ends shall not be more than ±1" from vertical leg of the steel armor at the expansion joint system.

Concrete shall be forced under and around steel armor and anchors. Proper consolidation of the concrete shall be achieved by localized internal vibration.

The contractor shall use one of the qualified resin anchor systems in accordance with Sec 1039.

Cost of furnishing and installing the resin anchor system, complete in place, will be considered completely covered by the contract unit price for Strip Seal Expansion Joint System.

The minimum embedment depth in concrete with f'c = 4,000 psi for the resin anchor system shall be that required to meet the minimum ultimate pullout strength in accordance with Sec 1039 but shall not be less than 5".

DETAILS OF STRIP SEAL AT INTERMEDIATE BENT NO. 17

Detailed Oct. 2013
Checked Oct. 2013

Note: This drawing is not to scale. Follow dimensions.

"THIS MEDIA SHOULD NOT BE CONSIDERED A CERTIFIED DOCUMENT."

DATE PREPARED	
11/12/2013	
ROUTE 71	STATE MO
DISTRICT BR	SHEET NO. 6
COUNTY JACKSON	
JOB NO. J4P2191	
CONTRACT ID.	
PROJECT NO.	
BRIDGE NO. A27452	

DATE	DESCRIPTION

IF A SEAL IS PRESENT ON THIS SHEET IT HAS BEEN ELECTRONICALLY SEALED AND DATED.

MISSOURI HIGHWAYS AND TRANSPORTATION COMMISSION
105 WEST CAPITOL
JEFFERSON CITY, MO 65102
1-888-ASK-MODOT (1-888-275-6636)

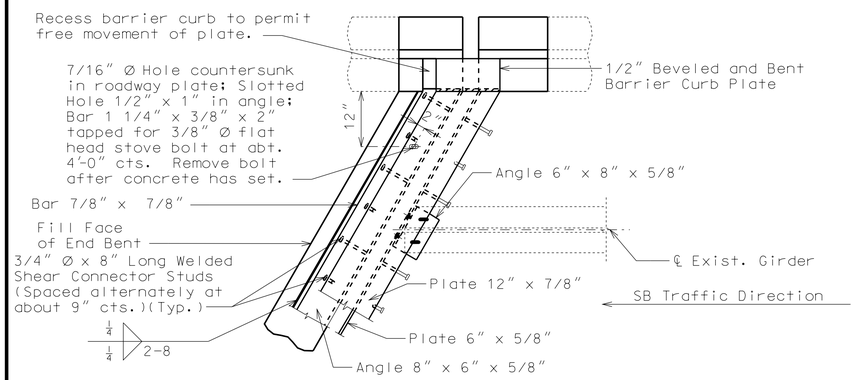

PART PLAN

Note: Concrete Vent Holes not shown for clarity.

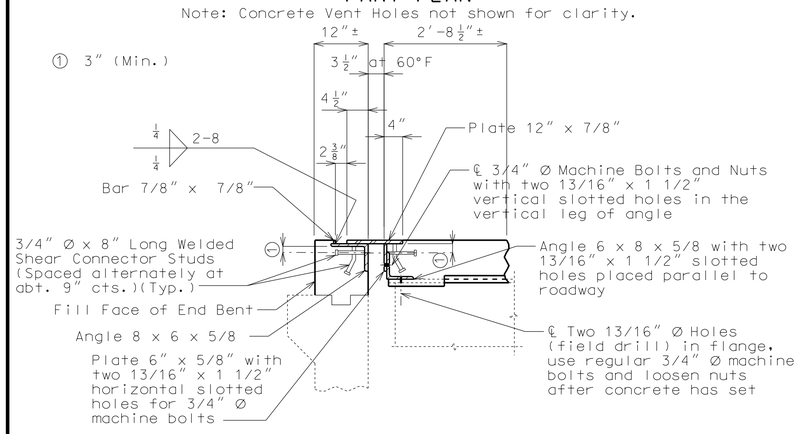

PART SECTION AT END BENT

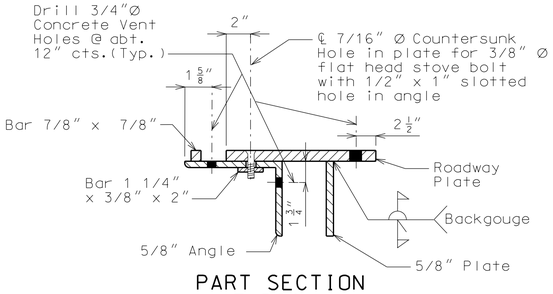

PART SECTION (TYPICAL)

GENERAL NOTES:

Expansion device shall be fabricated in one section, except for stage construction and when the length is over 50 feet. A complete joint penetration groove weld splice shall be required. Welds shall be ground flush to provide a smooth surface. The expansion device shall be fabricated and installed to the crown and grade of the roadway.

Plan dimensions are based on installation at 60°F. The expansion gap and other dimensions shall be increased or decreased 1/8" for each 10° fall or rise in temperature at installation.

Material for the expansion device shall be ASTM A709 Grade 36 structural steel. Anchors for the expansion device shall be in accordance with Sec 1037.

Structural steel for the expansion device and curb plate shall be coated with a minimum of two coats of inorganic zinc primer (5 mils minimum) or galvanized in accordance with ASTM A123. Anchors need not be protected from overspray.

Payment for furnishing, coating or galvanizing and installing the structural steel for the expansion device will be considered completely covered by the contract unit price for Expansion Device (Flat Plate) per linear foot.

Concrete shall be forced under and around flat plate, anchors and angles. Proper consolidation shall be achieved by localized internal vibration. Finishing of the concrete shall be achieved by hand finishing within one foot of the expansion device. The vertical and horizontal concrete vent holes shall be offset from each other. Do not alternate holes at the 12" spacing.

New longitudinal reinforcing steel shall be placed and exist. longitudinal reinforcing steel shall be cut/bent so that ends shall not be more than ±1" from vertical leg of the steel armor at the expansion joint system.

Complete joint penetration welds utilized in the fabrication of the expansion device shall be nondestructively tested by an approved method.

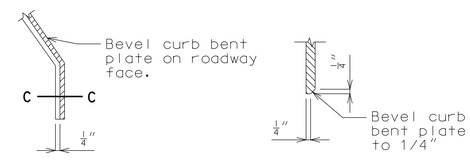

PART ELEVATION AT END OF BEVELED CURB BENT PLATE

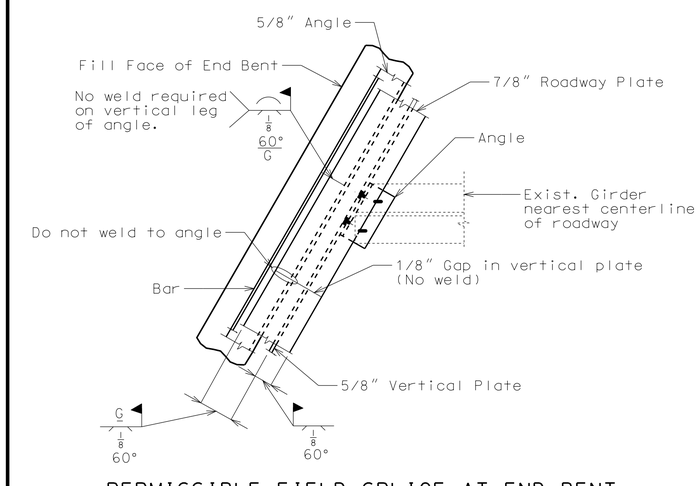

PERMISSIBLE FIELD SPLICE AT END BENT

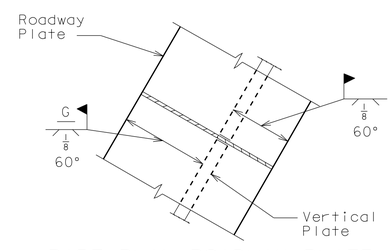

PART PLAN ROADWAY PLATE AND VERTICAL PLATE

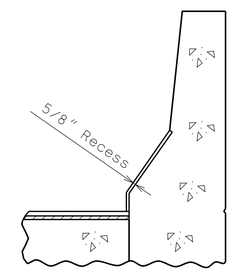

PART SECTION B-B

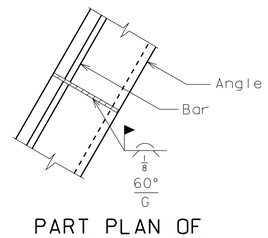

PART PLAN OF ANGLE AND BAR

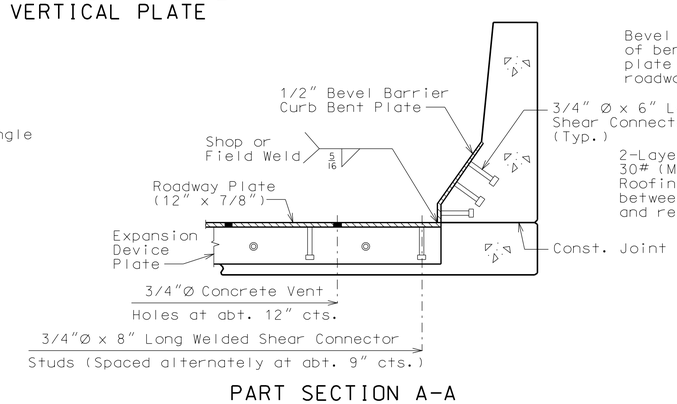

PART SECTION A-A

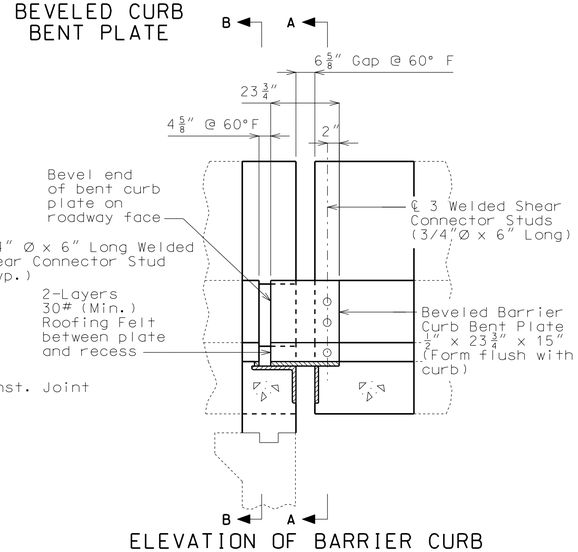

ELEVATION OF BARRIER CURB

DETAILS OF FLAT PLATE EXPANSION DEVICE AT END BENT NO. 20

Detailed Oct. 2013
Checked Oct. 2013

Note: This drawing is not to scale. Follow dimensions.

"THIS MEDIA SHOULD NOT BE CONSIDERED A CERTIFIED DOCUMENT."

DATE PREPARED	
11/12/2013	
ROUTE 71	STATE MO
DISTRICT BR	SHEET NO. 7
COUNTY JACKSON	
JOB NO. J4P2191	
CONTRACT ID.	
PROJECT NO.	
BRIDGE NO. A27452	

DATE	DESCRIPTION

MISSOURI HIGHWAYS AND TRANSPORTATION COMMISSION

105 WEST CAPITOL
JEFFERSON CITY, MO 65102
1-888-ASK-MODOT (1-888-275-6636)

IF A SEAL IS PRESENT ON THIS SHEET IT HAS BEEN ELECTRONICALLY SEALED AND DATED.

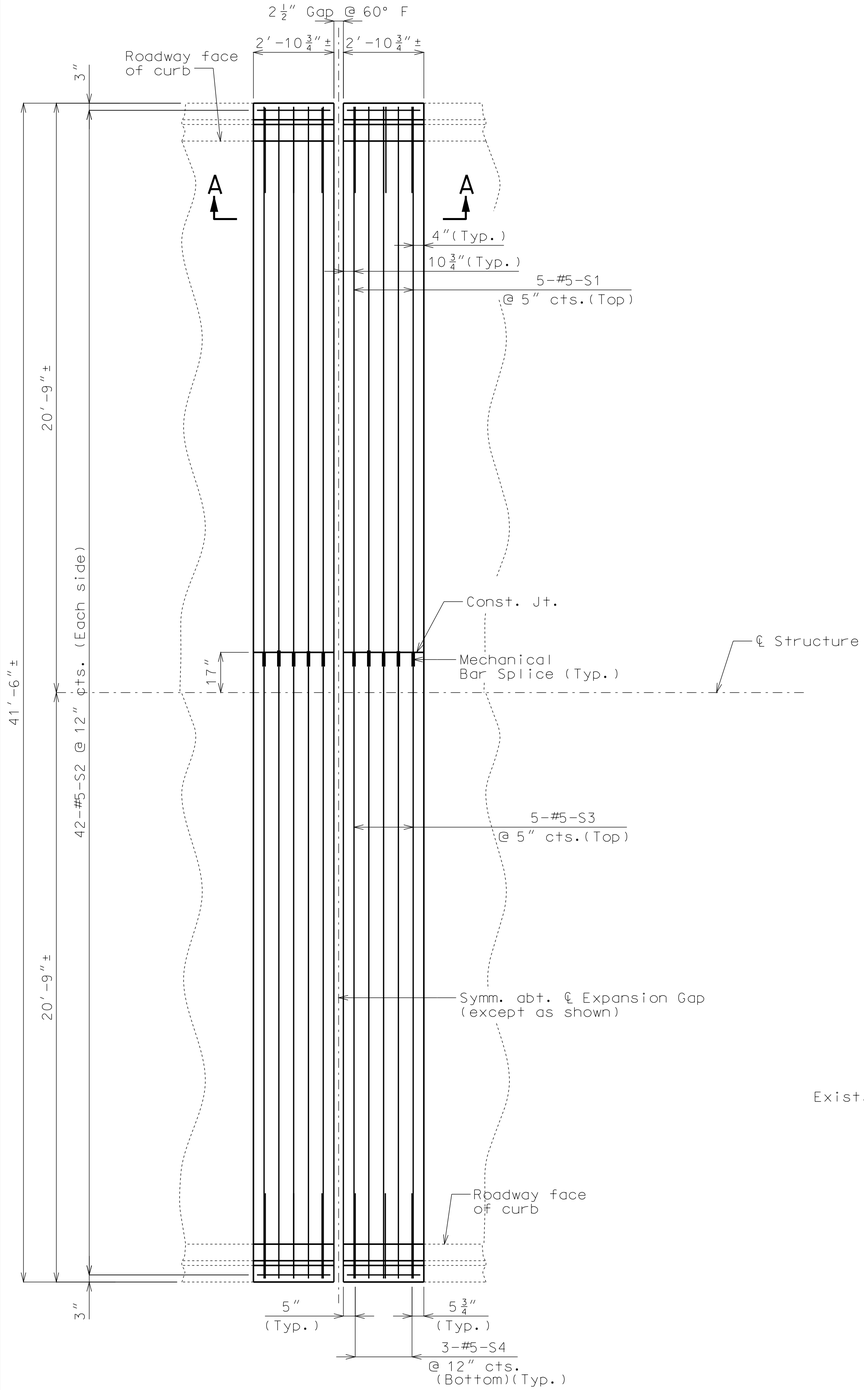

PART PLAN OF SLAB @ INT. BENT NO. 4
SHOWING REINFORCEMENT

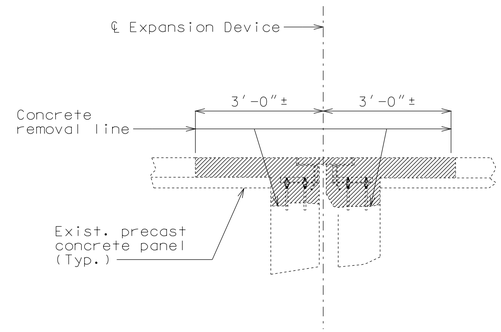

PART SECTION THRU
EXPANSION DEVICE @
INT. BENT NO. 4
SHOWING REMOVAL

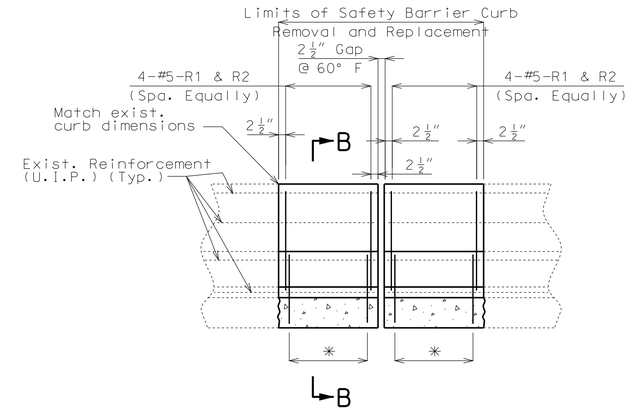

* 4-#5-R3 & R4 spaced with #5-R1 & R2

PART ELEVATION SHOWING
SAFETY BARRIER CURB REINFORCEMENT
AT INTERMEDIATE BENT NO. 4

Note: Expansion device not shown for clarity.

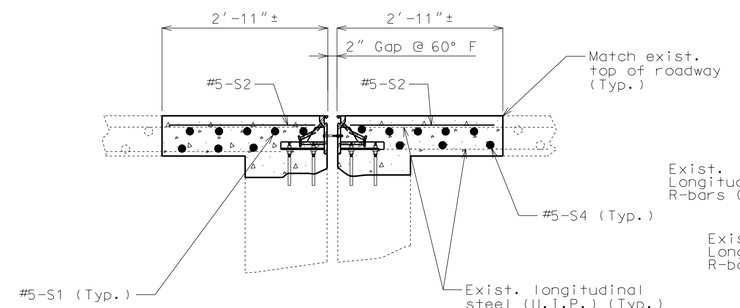

SECTION A-A

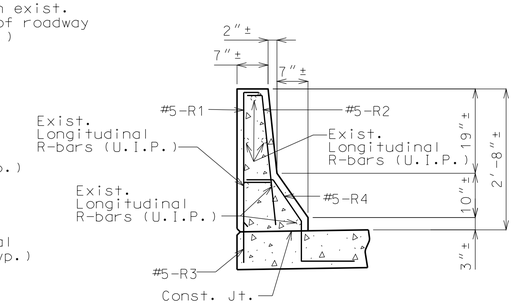

PART SECTION B-B

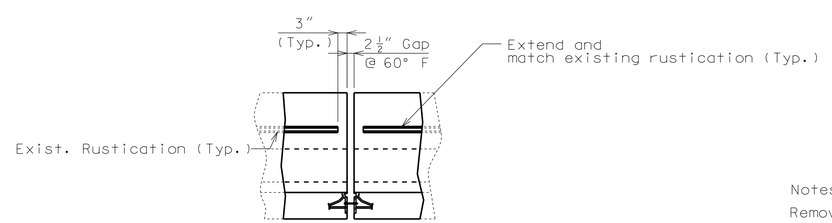

PART ELEVATION SHOWING PARTIAL
SAFETY BARRIER CURB REPLACEMENT

Note: Strip seal gland not shown for clarity.

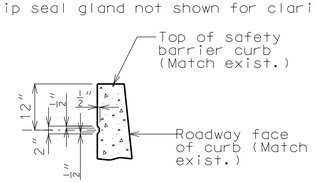

PART SECTION SHOWING
RUSTICATION DETAILS

Notes:

Remove existing stirrups within limits of Barrier Curb Removal.

All exposed edges of new barrier curb shall match existing barrier curb.

Payment for concrete curb removal and all new concrete and reinforcement for barrier curb, complete-in-place, will be considered completely covered by the contract unit price for Remove and Replace Barrier Curb per linear foot.

Shift S-bars where necessary to clear the expansion device.

The contractor shall use a mechanical bar splice for #5-S1 & #5-S3 bars at the specified location. The total bar lengths for bars indicated in the bill of reinforcing steel are determined based on the end of the bars being located flush to the face of the construction joint. No additional payment will be made for any additional bar lengths required for the mechanical bar splices. Mechanical bar splices shall be in accordance with Sec 706 except that no measurement will be made for mechanical bar splice and will be considered completely covered by the contract unit price for the reinforcing steel.

"THIS MEDIA SHOULD NOT BE CONSIDERED A CERTIFIED DOCUMENT."

DATE PREPARED	11/12/2013
ROUTE	71
STATE	MO
DISTRICT	BR
SHEET NO.	8
COUNTY	JACKSON
JOB NO.	J4P2191
CONTRACT ID.	
PROJECT NO.	
BRIDGE NO.	A27452

DESCRIPTION	DATE

MISSOURI HIGHWAYS AND TRANSPORTATION COMMISSION
105 WEST CAPITOL
JEFFERSON CITY, MO 65102
1-888-ASK-MODOT (1-888-275-6636)

IF A SEAL IS PRESENT ON THIS SHEET IT HAS BEEN ELECTRONICALLY SEALED AND DATED.

Detailed Oct. 2013
Checked Oct. 2013

Note: This drawing is not to scale. Follow dimensions.

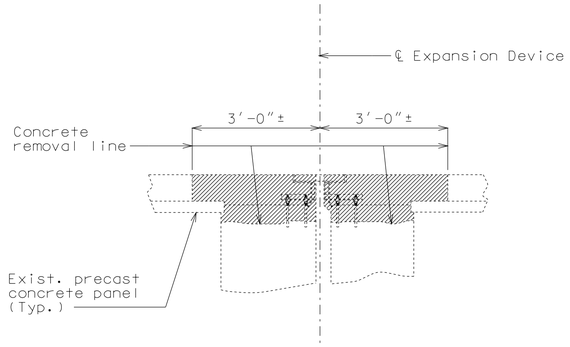

PART SECTION THRU
EXPANSION DEVICE @
INT. BENTS NO. 9 & 13
SHOWING REMOVAL

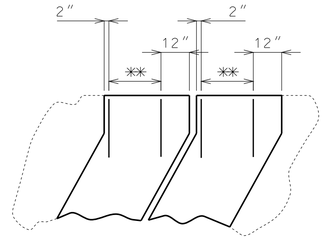

✱✱ 3-#5-S4 (Spa. Equally)

PART PLAN OF SLAB AT
INT. BENTS NO. 9 & 13
SHOWING REINFORCEMENT

(Left side shown, right side similar)

Note: Existing reinforcement not shown for clarity.

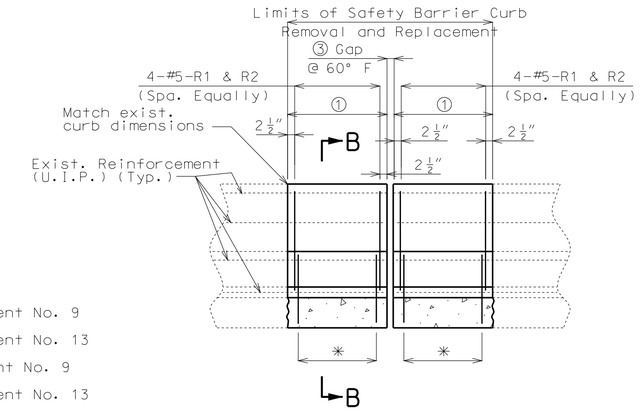

① 2'-10 3/4"± Bent No. 9
2'-10 1/2"± Bent No. 13
② 2'-11"± Bent No. 9
2'-10 3/4"± Bent No. 13
③ 2 1/2" Bent No. 9
3" Bent No. 13
④ 2" Bent No. 9
2 1/2" Bent No. 13

✱ 4-#5-R3 & R4 spaced with #5-R1 & R2

PART ELEVATION SHOWING
SAFETY BARRIER CURB REINFORCEMENT
AT INTERMEDIATE BENTS NO. 9 & 13

Note: Expansion device not shown for clarity.

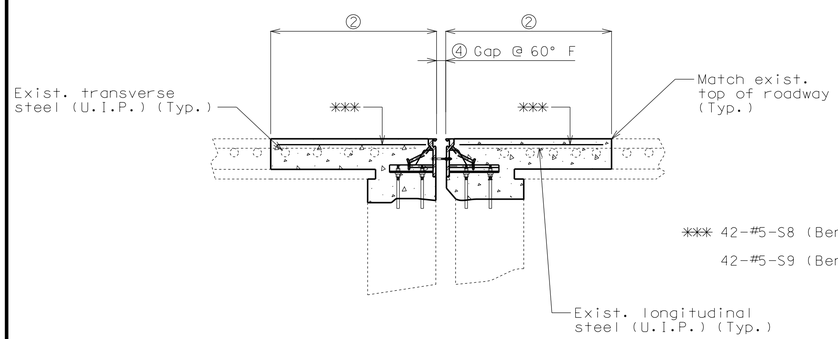

✱✱✱ 42-#5-S8 (Bent No. 9)
42-#5-S9 (Bent No. 13)

PART SECTION THRU
EXPANSION DEVICE @
INT. BENTS NO. 9 & 13
SHOWING REINFORCEMENT

Notes:

Bent No. 9 skew = 20°

Bent No. 13 skew = 44°34'06"

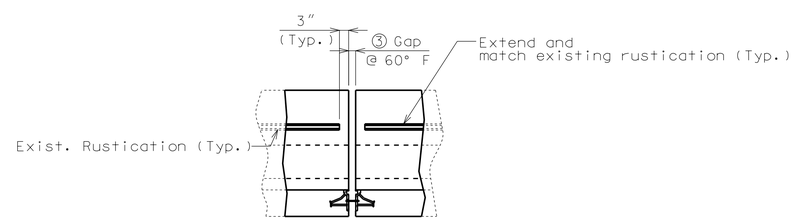

PART ELEVATION SHOWING PARTIAL
SAFETY BARRIER CURB REPLACEMENT

Note: Strip seal gland not shown for clarity.

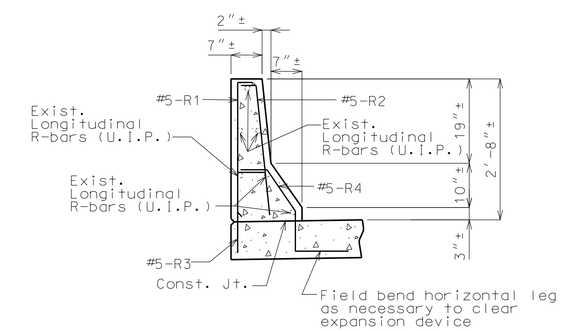

PART SECTION B-B

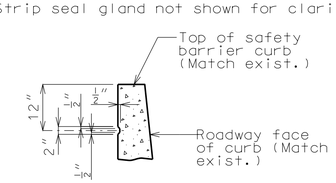

PART SECTION SHOWING
RUSTICATION DETAILS

Notes:

Remove existing stirrups within limits of Barrier Curb Removal.

All exposed edges of new barrier curb shall match existing barrier curb.

Payment for concrete curb removal and all new concrete and reinforcement for barrier curb, complete-in-place, will be considered completely covered by the contract unit price for Remove and Replace Barrier Curb per linear foot.

"THIS MEDIA SHOULD NOT BE CONSIDERED A CERTIFIED DOCUMENT."

DATE PREPARED	11/12/2013
ROUTE	71
STATE	MO
DISTRICT	BR
SHEET NO.	9
COUNTY	JACKSON
JOB NO.	J4P2191
CONTRACT ID.	
PROJECT NO.	
BRIDGE NO.	A27452

DESCRIPTION

DATE

MISSOURI HIGHWAYS AND TRANSPORTATION COMMISSION

105 WEST CAPITOL
JEFFERSON CITY, MO 65102
1-888-ASK-MODOT (1-888-275-6636)

IF A SEAL IS PRESENT ON THIS SHEET IT HAS BEEN ELECTRONICALLY SEALED AND DATED.

Detailed Oct. 2013
Checked Oct. 2013

Note: This drawing is not to scale. Follow dimensions.

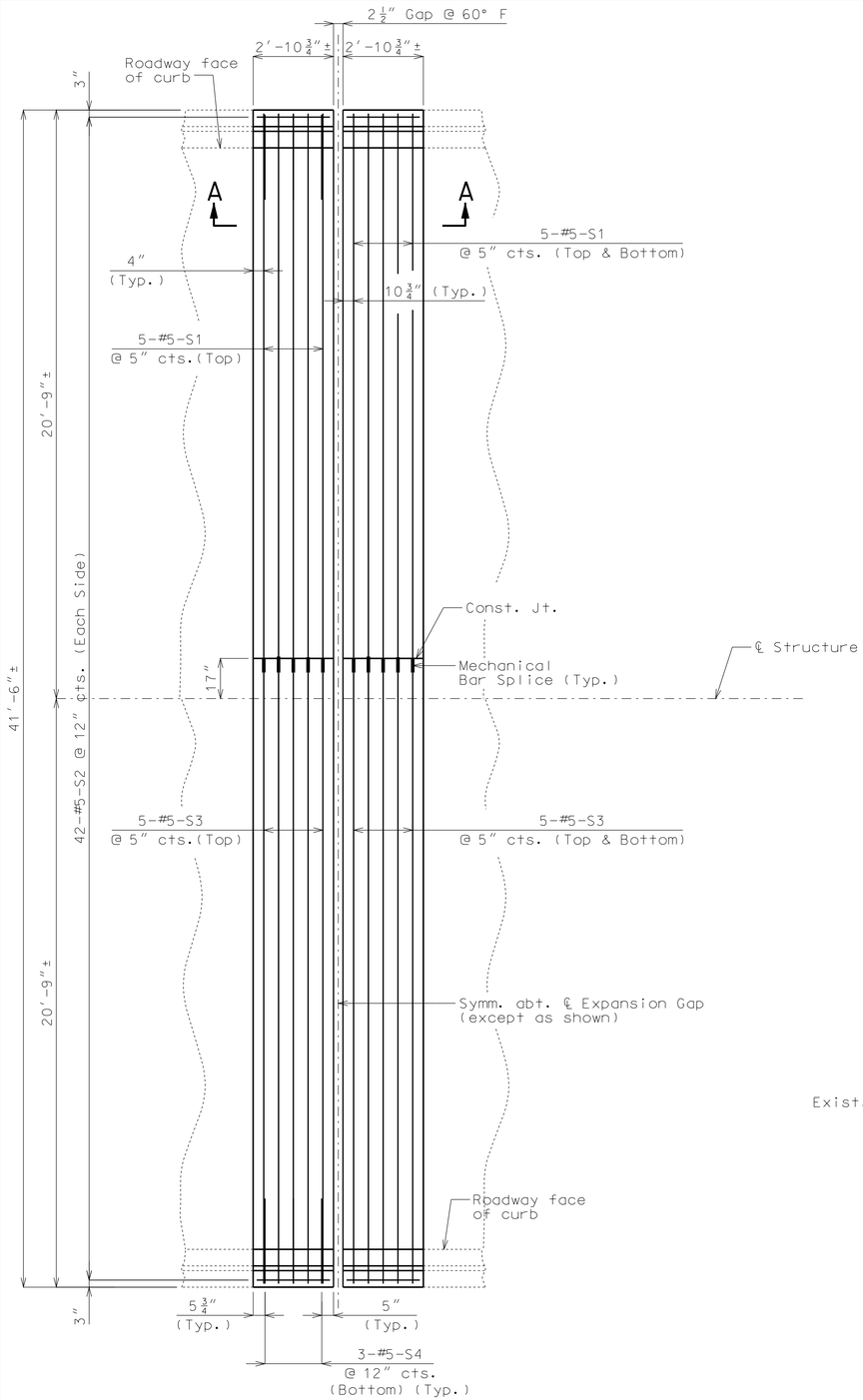

PART PLAN OF SLAB @ INT. BENT NO. 17
SHOWING REINFORCEMENT

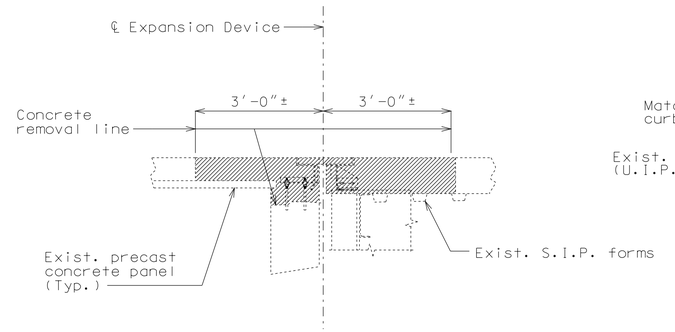

PART SECTION THRU
EXPANSION DEVICE @
INT. BENT NO. 17
SHOWING REMOVAL

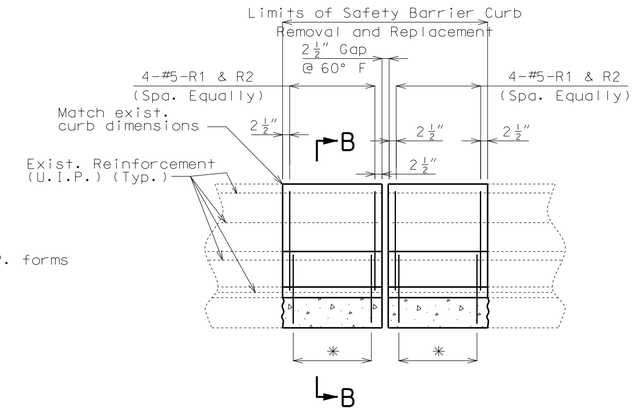

* 4-#5-R3 & R4 spaced with #5-R1 & R2

PART ELEVATION SHOWING
SAFETY BARRIER CURB REINFORCEMENT
AT INTERMEDIATE BENT NO. 17

Note: Expansion device not shown for clarity.

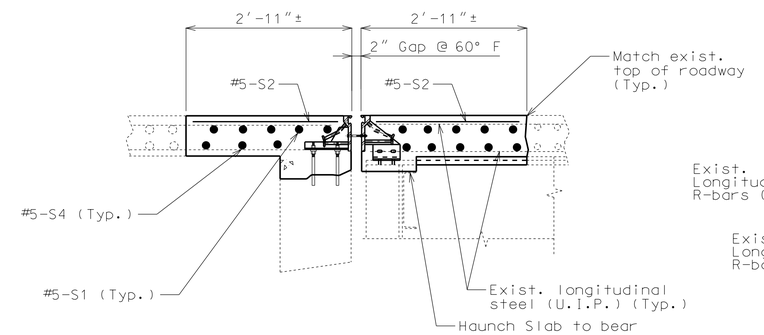

SECTION A-A

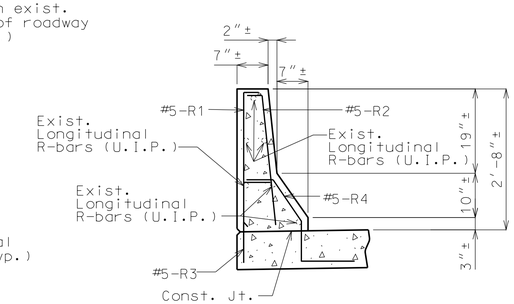

PART SECTION B-B

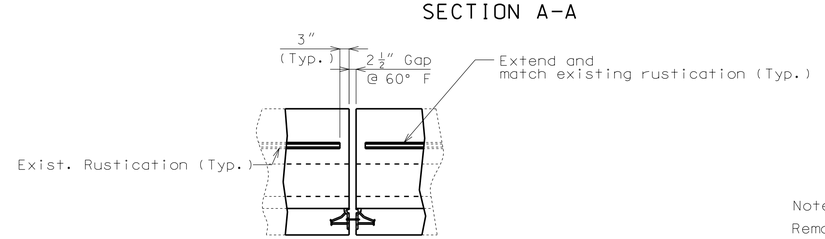

PART ELEVATION SHOWING PARTIAL
SAFETY BARRIER CURB REPLACEMENT

Note: Strip seal gland not shown for clarity.

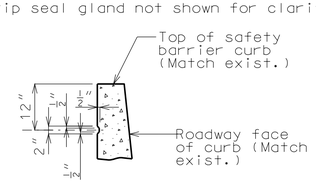

PART SECTION SHOWING
RUSTICATION DETAILS

Notes:

Remove existing stirrups within limits of Barrier Curb Removal.

All exposed edges of new barrier curb shall match existing barrier curb.

Payment for concrete curb removal and all new concrete and reinforcement for barrier curb, complete-in-place, will be considered completely covered by the contract unit price for Remove and Replace Barrier Curb per linear foot.

Shift S-bars where necessary to clear the expansion device.

The contractor shall use a mechanical bar splice for #5-S1 & #5-S3 bars at the specified location. The total bar lengths for bars indicated in the bill of reinforcing steel are determined based on the end of the bars being located flush to the face of the construction joint. No additional payment will be made for any additional bar lengths required for the mechanical bar splices. Mechanical bar splices shall be in accordance with Sec 706 except that no measurement will be made for mechanical bar splice and will be considered completely covered by the contract unit price for the reinforcing steel.

Detailed Oct. 2013
Checked Oct. 2013

Note: This drawing is not to scale. Follow dimensions.

"THIS MEDIA SHOULD NOT BE CONSIDERED A CERTIFIED DOCUMENT."

DATE PREPARED	
11/12/2013	
ROUTE 71	STATE MO
DISTRICT BR	SHEET NO. 10
COUNTY JACKSON	
JOB NO. J4P2191	
CONTRACT ID.	
PROJECT NO.	
BRIDGE NO. A27452	

DESCRIPTION	DATE

MISSOURI HIGHWAYS AND TRANSPORTATION COMMISSION
105 WEST CAPITOL
JEFFERSON CITY, MO 65102
1-888-ASK-MODOT (1-888-275-6636)

IF A SEAL IS PRESENT ON THIS SHEET IT HAS BEEN ELECTRONICALLY SEALED AND DATED.

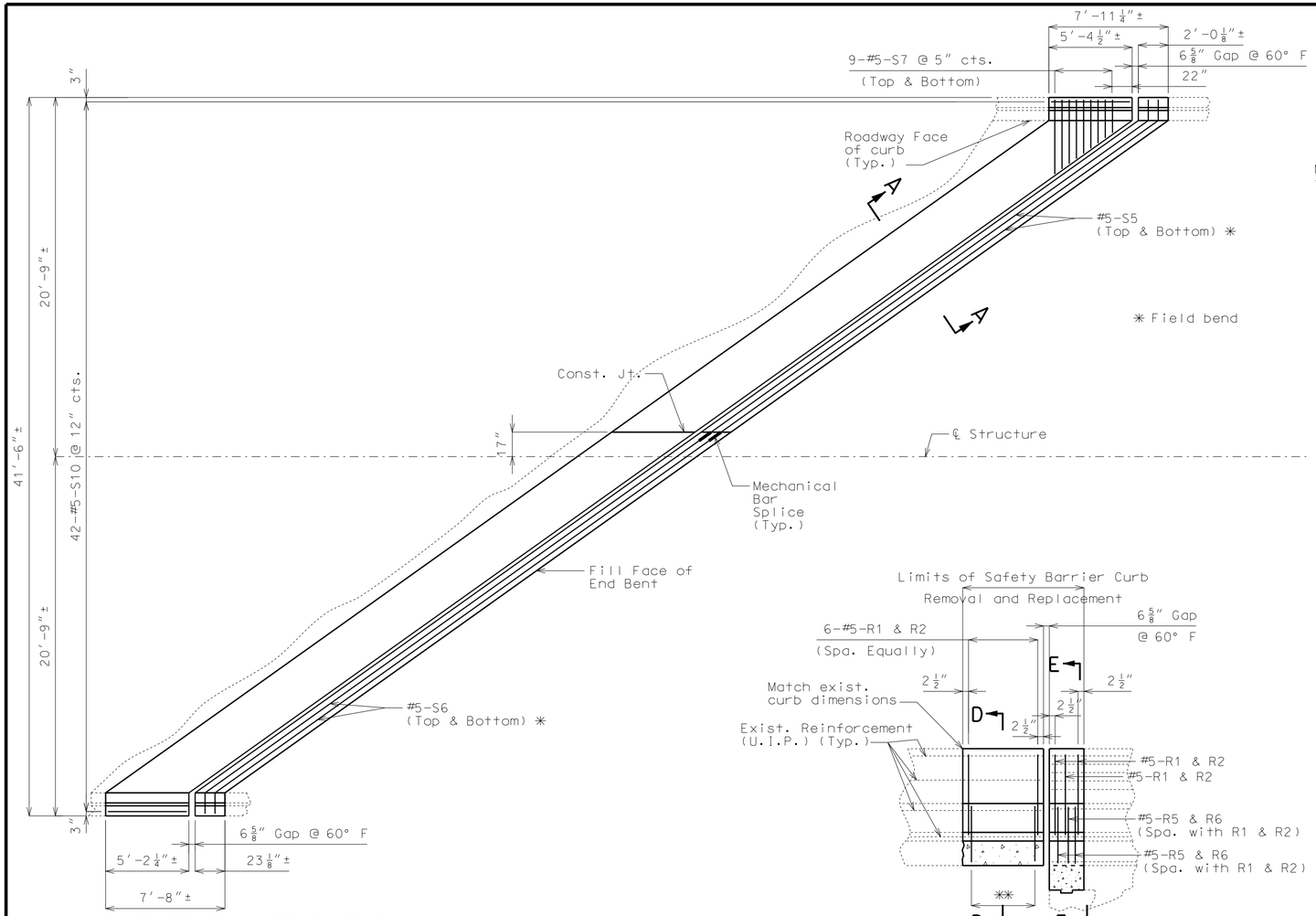

PART PLAN OF SLAB @
END BENT NO. 20
SHOWING REINFORCEMENT

Note: Existing reinforcement and expansion device not shown for clarity.

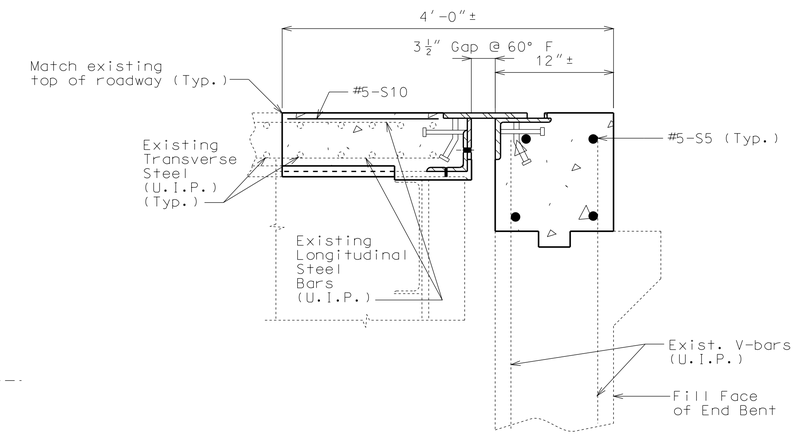

SECTION A-A

✳✳ 6-#5-R3 & R4 spaced with #5-R1 & R2

PART ELEVATION SHOWING
SAFETY BARRIER CURB REINFORCEMENT
AT END BENT NO. 20

Notes: Rustication and expansion device not shown for clarity.
For rustication details, see Sheet No. 8.

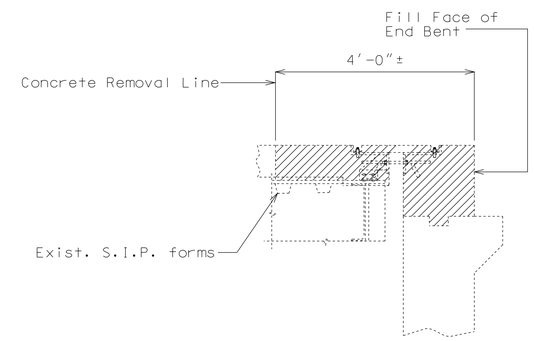

PART SECTION THRU END BENT NO. 20
SHOWING REMOVAL

Notes:

For details of expansion device not shown, see Sheet No. 7.

Shift S-bars where necessary to clear the expansion device.

Remove existing stirrups within limits of Safety Barrier Removal.

All exposed edges of new barrier curb shall match existing barrier curb.

Payment for concrete curb removal and all new concrete and reinforcement for barrier curb, complete-in-place, will be considered completely covered by the contract unit price for Remove and Replace Barrier Curb per linear foot.

The contractor shall use a mechanical bar splice for #5-S5 & #5-S6 bars at the specified location. The total bar lengths for bars indicated in the bill of reinforcing steel are determined based on the end of the bars being located flush to the face of the construction joint. No additional payment will be made for any additional bar lengths required for the mechanical bar splices. Mechanical bar splices shall be in accordance with Sec 706 except that no measurement will be made for mechanical bar splice and will be considered completely covered by the contract unit price for the reinforcing steel.

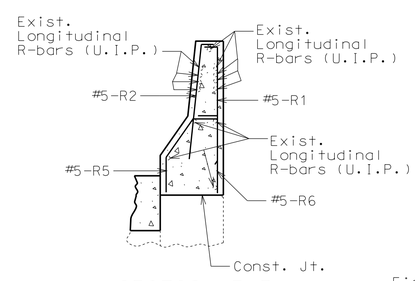

SECTION E-E

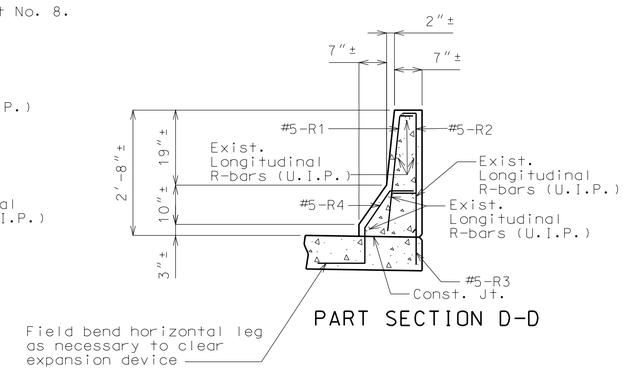

PART SECTION D-D

Detailed Oct. 2013
Checked Oct. 2013

Note: This drawing is not to scale. Follow dimensions.

"THIS MEDIA SHOULD NOT BE CONSIDERED A CERTIFIED DOCUMENT."

DATE PREPARED	11/12/2013
ROUTE	71
STATE	MO
DISTRICT	BR
SHEET NO.	11
COUNTY	JACKSON
JOB NO.	J4P2191
CONTRACT ID.	
PROJECT NO.	
BRIDGE NO.	A27452

DESCRIPTION

DATE

MISSOURI HIGHWAYS AND TRANSPORTATION COMMISSION
105 WEST CAPITOL
JEFFERSON CITY, MO 65102
1-888-ASK-MODOT (1-888-275-6636)

IF A SEAL IS PRESENT ON THIS SHEET IT HAS BEEN ELECTRONICALLY SEALED AND DATED.

BILL OF REINFORCING STEEL

NO. REQ'D.	MARK NO. SIZE	MARK NO. MARK	LOCATION	EPOXY (E)	SHAPE NO.	STIRRUP (S)	SUBSTR. (X)	VARIES (V)	NO. EACH	B FT.	B IN.	C FT.	C IN.	D FT.	D IN.	E FT.	E IN.	F FT.	F IN.	H FT.	H IN.	K FT.	K IN.	NOMINAL LENGTH FT.	NOMINAL LENGTH IN.	ACTUAL LENGTH FT.	ACTUAL LENGTH IN.	WEIGHT LBS.
			SLAB																									
27	5	S1	SLAB	E	20					19	2.000													19	2	19	2	540
168	5	S2	SLAB	E	20					2	8.000													2	8	2	8	467
25	5	S3	SLAB	E	20					22	0.000													22	0	22	0	574
42	5	S4	SLAB	E	20					3	7.000													3	7	3	7	157
4	5	S5	SLAB	E	20					36	9.000													36	9	36	9	153
4	5	S6	SLAB	E	20					41	7.000													41	7	41	7	173
18	5	S7	SLAB	E	20			V	2	2	1.000													2	1	2	1	
			INCREMENT =							4	0.000													4	0	4	0	57
			2.875 INCH																									
84	5	S8	SLAB	E	20					2	10.000													2	10	2	10	248
84	5	S9	SLAB	E	20					3	10.000													3	10	3	10	336
42	5	S10	SLAB	E	20					4	10.000													4	10	4	10	212
			BARRIER CURB																									
82	5	R1	BARRIER CURB	E	19	S				2	6.000	3.500												2	10	2	8	228
82	5	R2	BARRIER CURB	E	15	S				2	6.125	3.500								2	6.000	3.000		2	10	2	9	235
76	5	R3	BARRIER CURB	E	19	S					17.000	6.000												0	23	0	22	145
76	5	R4	BARRIER CURB	E	27	S						6.000		11.125		7.000		12.000		9.125		6.375		3	0	2	10	225
6	5	R5	BARRIER CURB	E	27	S						6.000		11.125		15.000				9.125		6.375		2	8	2	7	16
6	5	R6	BARRIER CURB	E	19	S				2	0.000	6.000												2	6	2	5	15
			TOTALS																									
	5			E																								3781
			TOTAL																									0
			TOTAL	E																								3781
			Slab on																									
			Girder																									
	5			E																								2917
			TOTAL																									2917
			Safety																									
			Barrier																									
			Curb																									
	5			E																								864
			TOTAL																									864

BILL OF REINFORCING STEEL

NO. REQ'D.	MARK NO. SIZE	MARK NO. MARK	LOCATION	EPOXY (E)	SHAPE NO.	STIRRUP (S)	SUBSTR. (X)	VARIES (V)	NO. EACH	B FT.	B IN.	C FT.	C IN.	D FT.	D IN.	E FT.	E IN.	F FT.	F IN.	H FT.	H IN.	K FT.	K IN.	NOMINAL LENGTH FT.	NOMINAL LENGTH IN.	ACTUAL LENGTH FT.	ACTUAL LENGTH IN.	WEIGHT LBS.

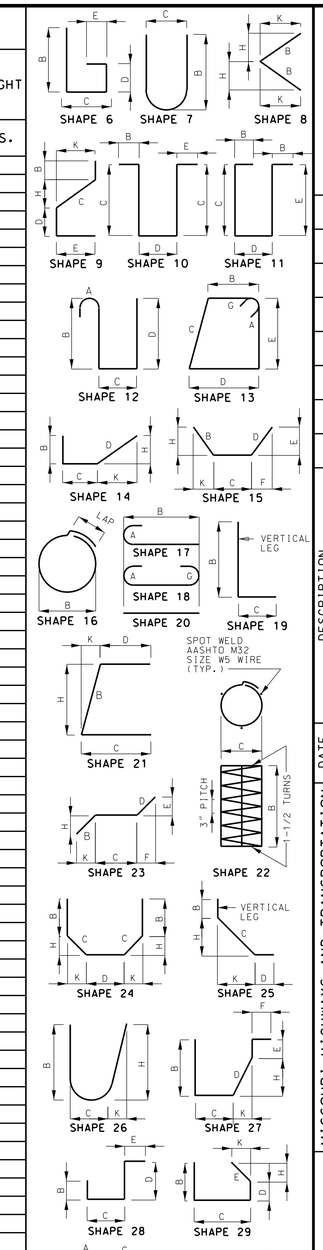

"THIS MEDIA SHOULD NOT BE CONSIDERED A CERTIFIED DOCUMENT."

DATE PREPARED	11/12/2013
ROUTE	71
STATE	MO
DISTRICT	BR
SHEET NO.	12
COUNTY	JACKSON
JOB NO.	J4P2191
CONTRACT ID.	
PROJECT NO.	
BRIDGE NO.	A27452

DESCRIPTION

DATE

IF A SEAL IS PRESENT ON THIS SHEET IT HAS BEEN ELECTRONICALLY SEALED AND DATED.

MISSOURI HIGHWAYS AND TRANSPORTATION COMMISSION

105 WEST CAPITOL
JEFFERSON CITY, MO 65102
1-888-ASK-MODOT (1-888-275-6636)

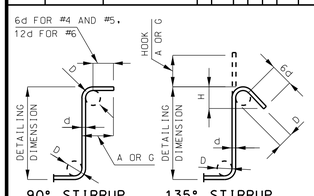

STIRRUP HOOK DIMENSIONS				
GRADES 40 - 50 - 60 KSI				
BAR SIZE	D (IN.)	90° HOOK	135° HOOK	
		HOOK A OR G	HOOK A OR G	APPROX. H
#4	2"	4 1/2"	4 1/2"	3"
#5	2 1/2"	6"	5 1/2"	3 3/4"
#6	4 1/2"	12"	8"	4 1/2"

NOTE: UNLESS OTHERWISE NOTED DIAMETER "D" IS THE SAME FOR ALL BENDS AND HOOKS ON A BAR.

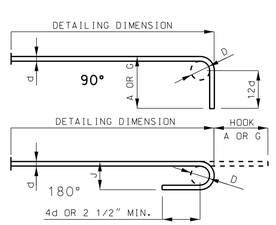

END HOOK DIMENSIONS				
BAR SIZE	D (IN.)	ALL GRADES		
		180° HOOKS		90° HOOKS
		A OR G	J	A OR G
#3	2 1/4"	5"	3"	6"
#4	3"	6"	4"	8"
#5	3 3/4"	7"	5"	10"
#6	4 1/2"	8"	6"	12"
#7	5 1/4"	10"	7"	14"
#8	6"	11"	8"	16"
#9	9 1/2"	15"	11 3/4"	19"
#10	10 3/4"	17"	13 1/4"	22"
#11	12"	19"	14 3/4"	2'-0"
#14	18 1/4"	2'-3"	21 3/4"	2'-7"

TWO ADDITIONAL #5-S1 ARE INCLUDED IN THE BAR BILL FOR TESTING.

NOTE:
ALL STANDARD HOOKS AND BENDS OTHER THAN 180 DEGREE ARE TO BE BENT WITH SAME PROCEDURE AS FOR 90 DEGREE STANDARD HOOKS.
HOOKS AND BENDS SHALL BE IN ACCORDANCE WITH THE PROCEDURES AS SHOWN ON THIS SHEET.
E = EPOXY COATED REINFORCEMENT.
S = STIRRUP.
X = BAR IS INCLUDED IN SUBSTRUCTURE QUANTITIES.
V = BAR DIMENSIONS VARY IN EQUAL INCREMENTS BETWEEN DIMENSIONS SHOWN ON THIS LINE AND THE FOLLOWING LINE.
NO. EA. = NUMBER OF BARS OF EACH LENGTH.
NOMINAL LENGTHS ARE BASED ON OUT TO OUT DIMENSIONS SHOWN IN BENDING DIAGRAMS AND ARE LISTED FOR FABRICATORS USE. (NEAREST INCH)
ACTUAL LENGTHS ARE MEASURED ALONG CENTERLINE BAR TO THE NEAREST INCH.
PAYWEIGHTS ARE BASED ON ACTUAL LENGTHS.
FOUR ANGLE OR CHANNEL SPACERS ARE REQUIRED FOR EACH COLUMN SPIRAL. SPACERS ARE TO BE PLACED ON INSIDE OF SPIRALS. LENGTH AND WEIGHT OF COLUMN SPIRALS DO NOT INCLUDE SPLICES OR SPACERS.
REINFORCING STEEL (GRADE 60) FY = 60,000 PSI.

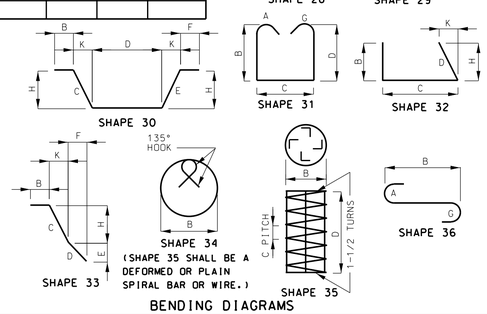

BENDING DIAGRAMS

Detailed Oct. 2013
Checked Oct. 2013

Note: This drawing is not to scale. Follow dimensions.

MISSOURI HIGHWAYS AND TRANSPORTATION COMMISSION

SEC/SUR 6 TWP 49N RGE 33W

U.I.P. AND REHABILITATE EXISTING (68.86'-90'-90'-69')(4'-64'-91'-91'-60') (4'-93'-4')(72'-93'-72')(4'-71'-91'-91'-71'-4') (70'-91'-91'-70')(6.15'-100'-136'-135'-102')(5.97'-122'-146')(9.41'-260'-260'-10')(140'-140') CONTINUOUS COMPOSITE PLATE GIRDER SPANS

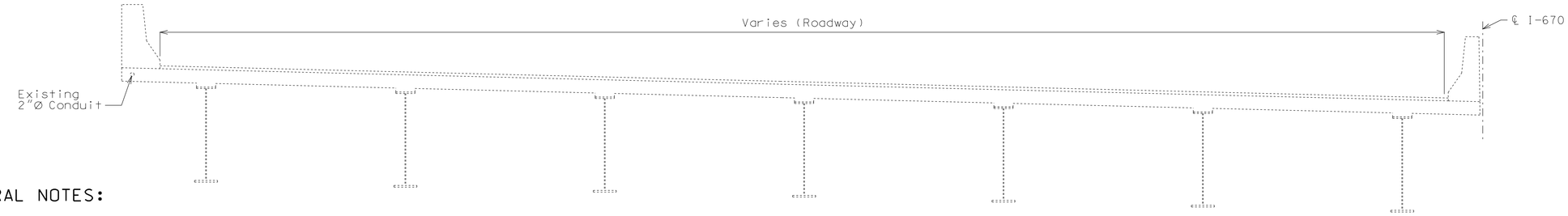

SECTION THRU SLAB

GENERAL NOTES:

Design Specifications:

2002 - AASHTO LFD (17th Edition) Standard Specifications
Bridge Deck Rating = 7

Design Loading:

HS20-44 (1979 & New Construction)
Military 24,000# Tandem Axle

Design Unit Stresses:

Class B-1 Concrete (Slab & Safety Barrier Curb) f'c = 4,000 psi

Reinforcing Steel (Grade 60) fy = 60,000 psi

Reinforcing Steel:

Minimum clearance to reinforcing steel shall be 1½", unless otherwise shown.

Expansion joints:

The concrete for slab and barrier curb replacement shall be Class B-1.

Payment for backwall and slab concrete, complete-in-place, for expansion joint replacement will be considered completely covered by the contract unit price for Class B-1 concrete per cu. yard.

Payment for furnishing and installing slab and backwall reinforcing steel, complete-in-place, for expansion joint replacement will be considered completely covered by the contract unit price for Reinforcing Steel (Epoxy Coated).

Concrete Protective Coatings:

Protective coating for concrete bents and piers (Epoxy & Urethane) shall be applied as shown on the bridge plans and in accordance with Sec 711.

Structural Steel Protective Coatings:

Protective Coating: System G in accordance with Sec 1081.

Protective Coating Limits: Surfaces of all existing structural steel located within 10 feet of ℄ joint @ Expansion Joints No. 2 & 3 (near Bents No. 8 & 9 each side) shall be recoated. Within this limit, items to be recoated shall include all surfaces of girders, diaphragms, stiffeners, bearings, and miscellaneous structural steel.

Surface Preparation: Surface preparation of the existing steel shall be in accordance with Sec 1081 for Recoating of Structural Steel (System G, H or I). The cost of surface preparation will be considered completely covered by the contract unit price per sq. foot for Surface Preparation for Recoating Structural Steel.

Prime Coat: The cost of the prime coat will be considered completely covered by the contract unit price per sq. foot for Field Application of Inorganic Zinc Primer. Tint of the prime coat for System G shall be similar to the color of the field coat to be used.

Field Coat: The color of the finish field coat shall be Gray (Federal Standard #26373). The cost of the intermediate field coat will be considered completely covered by the contract unit price per sq. foot for Intermediate Field Coat (System G). The cost of the finish field coat will be considered completely covered by the contract unit price per sq. foot for Finish Field Coat (System G).

Sec 1081.4.5 shall be modified such that the word "RECOATED" is replaced by the words "RECOATED - SYSTEM G - EXPANSION JOINTS NO. 2 & 3 AREA ONLY" as part of the new legend.

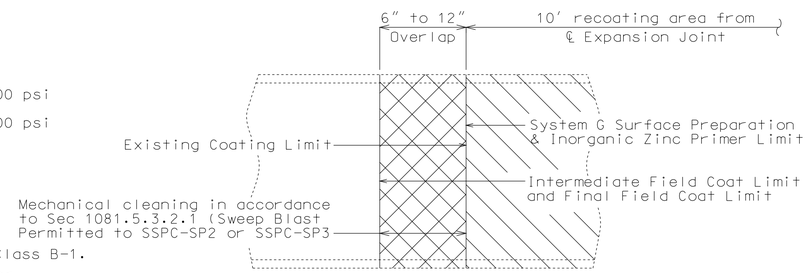

PART ELEVATION SHOWING LIMITS OF PAINT OVERLAP

(Vertical or horizontal paint limit. Horizontal limit shown)

Note:

Limits of Paint Overlap: System G shall overlap the existing coating between 6 inches and 12 inches in order to achieve maximum coverage at the paint limit of each complete system. The final field coating shall be masked to provide crisp, straight lines and to prevent overspray beyond the overlap required.

Miscellaneous:

Bars bonded in old concrete not removed shall be cleanly stripped and embedded into new concrete where possible. If length is available, old bars shall extend into new concrete at least 40 diameters for smooth bars and 30 diameters for deformed bars, unless otherwise noted.

Outline of old work is indicated by light dashed lines. Heavy lines indicate new work.

Contractor shall verify all dimensions in field before ordering new material.

The area exposed by the removal of concrete and not covered with new concrete shall be coated with an approved qualified special mortar in accordance with Sec 704.

Traffic Handling:

See Sheet No. 2 for Details of Stage Construction and Roadway Plans for Traffic Control.

Conduit:

Existing conduit that falls within area of slab removal shall be protected from damage.

Any damage to the conduit shall be repaired or replaced, at the contractor's expense, as directed by the engineer.

Conduit shall be reattached in removal areas. Cost of reattaching conduit will be considered completely covered by the contract unit price for Class B-1 Concrete.

Expansion fittings shall be placed as shown and set in accordance with the manufacturer's requirements and based on the air temperature at the time of setting given an estimated total expansion movement as shown above for each open joint using a maximum temperature range of 150° F and a maximum temperature of 120° F.

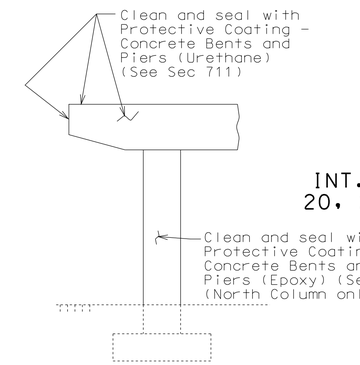

PART ELEVATION OF
INT. BENT NO. 24 SHOWING
PROTECTIVE COATING

Joint	Exp. Movement
1	5¼"
2	3½"
3	3¾"
4	4¾"
5	4¾"
6	5½"
8	6¾"
10	2¾"

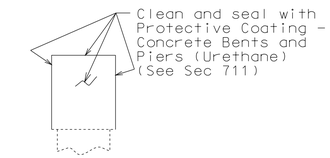

PART END ELEVATION OF
INT. BENTS NO. 4, 8, 9, 12, 16, 20, 24, 24 RAMP, 26 & 28 SHOWING
PROTECTIVE COATING

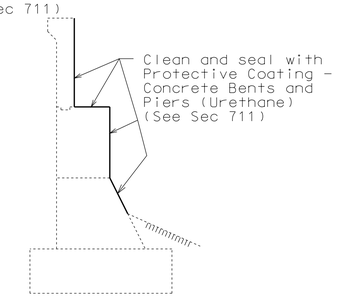

TYPICAL SECTION THRU
END BENT NO. 30 SHOWING
PROTECTIVE COATING

Estimated Quantities

Item		Total
Removal of Existing Expansion Joints & Adjacent Concrete	linear foot	492
Remove and Replace Barrier Curb	linear foot	100
Class B-1 Concrete	cu. yard	91.5
Reinforcing Steel (Epoxy Coated)	pound	8850
Protective Coating - Concrete Bents & Piers (Urethane)	lump sum	1
Protective Coating - Concrete Bents & Piers (Epoxy)	lump sum	1
Surface Preparation for Recoating Structural Steel	sq. foot	3000
Field Application of Inorganic Zinc Primer	sq. foot	3000
Intermediate Field Coat (System G)	sq. foot	3000
Finish Field Coat (System G)	sq. foot	3000
Strip Seal Expansion Joint System	linear foot	492

REPAIRS TO BRIDGE: I-670 VIADUCT WBL OVER VARIOUS STREETS AND BNSF, KCS & KCT RR'S

STATE ROAD FROM I-35 TO STATE LINE

IN KANSAS CITY

STA. 52+79.86± (MATCH EXISTING)

STD. 617.20

STD. 706.35

Detailed Dec. 2013
Checked Dec. 2013

Note: This drawing is not to scale. Follow dimensions.

"THIS MEDIA SHOULD NOT BE CONSIDERED A CERTIFIED DOCUMENT."

DATE PREPARED	
1/13/2014	
ROUTE	STATE
I-670	MO
DISTRICT	SHEET NO.
BR	1
COUNTY	
JACKSON	
JOB NO.	
J4P2191	
CONTRACT ID.	
PROJECT NO.	
BRIDGE NO.	
A31361	

DESCRIPTION

DATE

IF A SEAL IS PRESENT ON THIS SHEET IT HAS BEEN ELECTRONICALLY SEALED AND DATED.

MISSOURI HIGHWAYS AND TRANSPORTATION COMMISSION
105 WEST CAPITOL
JEFFERSON CITY, MO 65102
1-888-ASK-MODOT (1-888-275-6636)

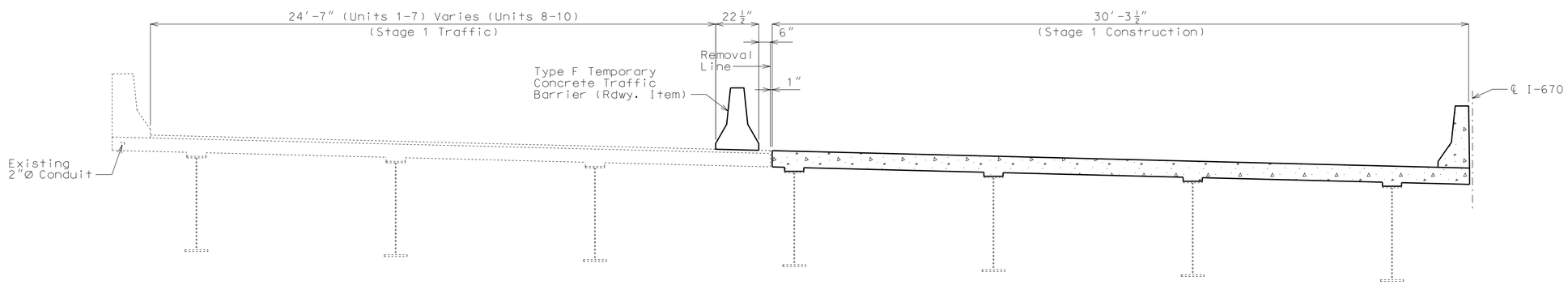

STAGE 1 CONSTRUCTION

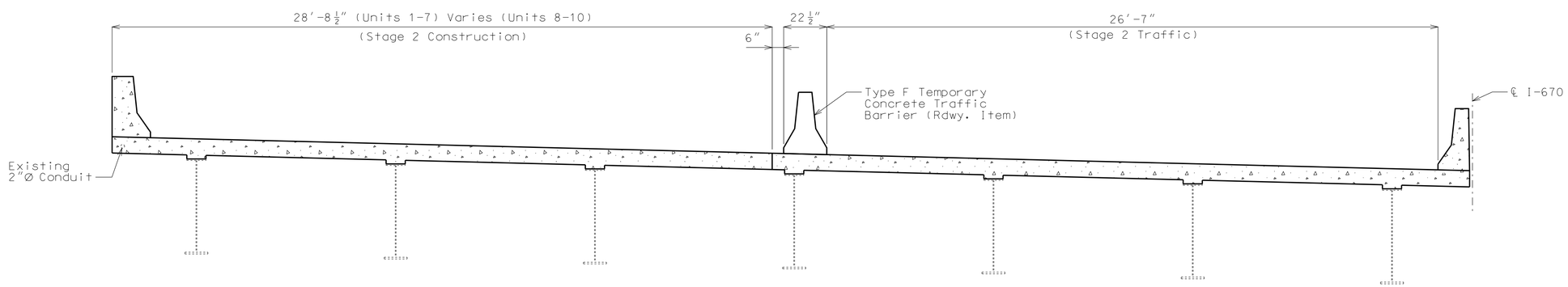

STAGE 2 CONSTRUCTION

Note:

Method of attachment for the Type F Temoprary Barrier shall be the Tie-Down Strap.

DETAILS OF STAGE CONSTRUCTION

Detailed Dec. 2013
Checked Dec. 2013

Note: This drawing is not to scale. Follow dimensions.

"THIS MEDIA SHOULD NOT BE CONSIDERED A CERTIFIED DOCUMENT."

DATE PREPARED	1/13/2014
ROUTE	I-670
STATE	MO
DISTRICT	BR
SHEET NO.	2
COUNTY	JACKSON
JOB NO.	J4P2191
CONTRACT ID.	
PROJECT NO.	
BRIDGE NO.	A31361

DATE	DESCRIPTION

IF A SEAL IS PRESENT ON THIS SHEET IT HAS BEEN ELECTRONICALLY SEALED AND DATED.

MISSOURI HIGHWAYS AND TRANSPORTATION COMMISSION
105 WEST CAPITOL
JEFFERSON CITY, MO 65102
1-888-ASK-MODOT (1-888-275-6636)

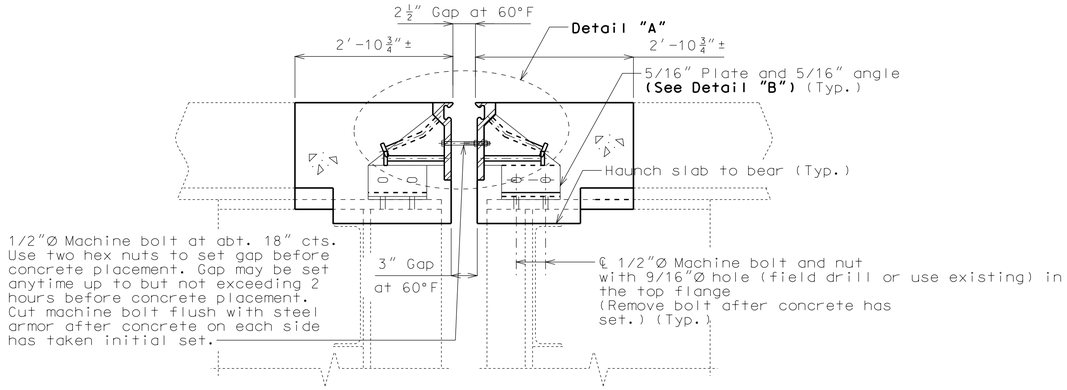

SECTION A-A

Note: Strip seal gland not shown for clarity.

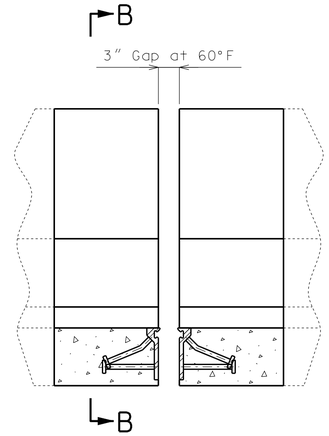

Note: Strip seal gland not shown for clarity.

PART ELEVATION OF BARRIER CURB

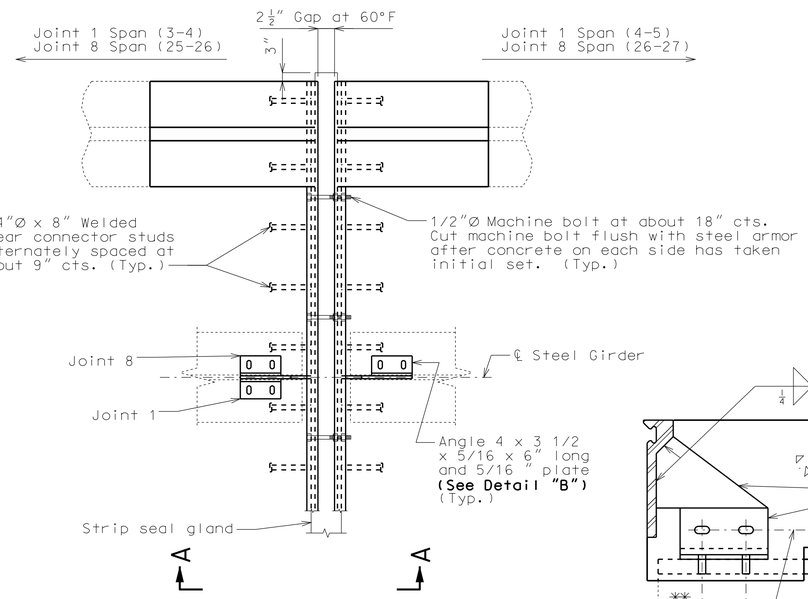

PART PLAN

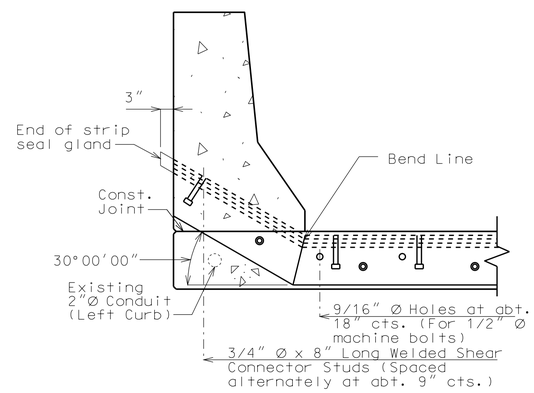

PART SECTION B-B

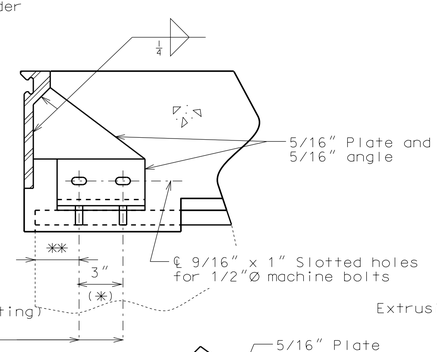

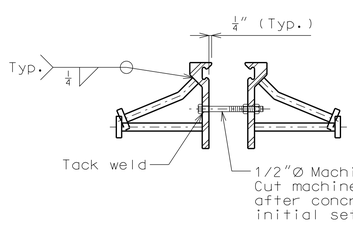

DETAIL "A"

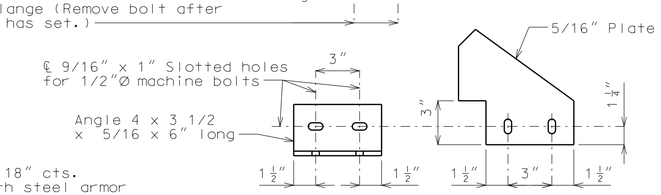

DETAIL "B"

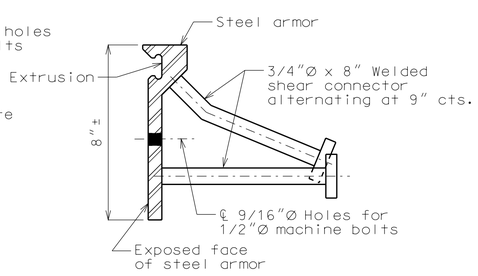

DETAIL OF JOINT ARMOR

Strip seal gland size = 5"

DETAIL OF GLAND

GENERAL NOTES:

Expansion joint system shall be fabricated in one section, except for stage construction and when the length is over 50 feet. A complete joint penetration groove welded splice shall be required. Welds shall be ground flush to provide a smooth surface. The expansion joint system shall be fabricated and installed to the crown and grade of the roadway.

The strip seal gland shall be installed in joints in one continuous piece without field splices. Factory splicing will be permitted for joints in excess of 53 feet.

Structural steel for the expansion joint system shall be ASTM A709 Grade 36 except the steel armor may be ASTM A709 Grade 50W. Anchors for the expansion joint system shall be in accordance with Sec 1037. Strip seal expansion joint system shall be in accordance with Sec 717.

Structural steel for the expansion joint system shall be coated with a minimum of two coats of inorganic zinc primer (5 mils minimum) or galvanized in accordance with ASTM A123. Anchors need not be protected from overspray.

Plan dimensions are based on installation at 60°F. The expansion gap and other dimensions shall be increased or decreased 1/4" (Jt. 1), 5/16" (Jt. 8) for each 10° fall or rise in temperature at installation.

New longitudinal reinforcing steel shall be placed and existing reinforcing steel shall be cut/bent so that ends shall not be more than ±1" from vertical leg of the steel armor at the expansion joint system.

Concrete shall be forced under and around steel armor and anchors. Proper consolidation of the concrete shall be achieved by localized internal vibration.

(*) Match existing.

** Joint 1 - 1 3/4" (*) Span (3-4), 2 1/2" (*) Span (4-5)

Joint 8 - 8 1/2" (*) Span (25-26), 2" (*) Span (26-27)

DETAILS OF STRIP SEAL AT EXPANSION JOINT 1 NEAR INTERMEDIATE BENT NO. 4 & EXPANSION JOINT 8 NEAR INTERMEDIATE BENT NO. 26

Detailed Dec. 2013
Checked Dec. 2013

Note: This drawing is not to scale. Follow dimensions.

"THIS MEDIA SHOULD NOT BE CONSIDERED A CERTIFIED DOCUMENT."

DATE PREPARED	
1/13/2014	
ROUTE	STATE
I-670	MO
DISTRICT	SHEET NO.
BR	3
COUNTY	
JACKSON	
JOB NO.	
J4P2191	
CONTRACT ID.	
PROJECT NO.	
BRIDGE NO.	
A31361	

DESCRIPTION	DATE

MISSOURI HIGHWAYS AND TRANSPORTATION COMMISSION
105 WEST CAPITOL
JEFFERSON CITY, MO 65102
1-888-ASK-MODOT (1-888-275-6636)

IF A SEAL IS PRESENT ON THIS SHEET IT HAS BEEN ELECTRONICALLY SEALED AND DATED.

REV.

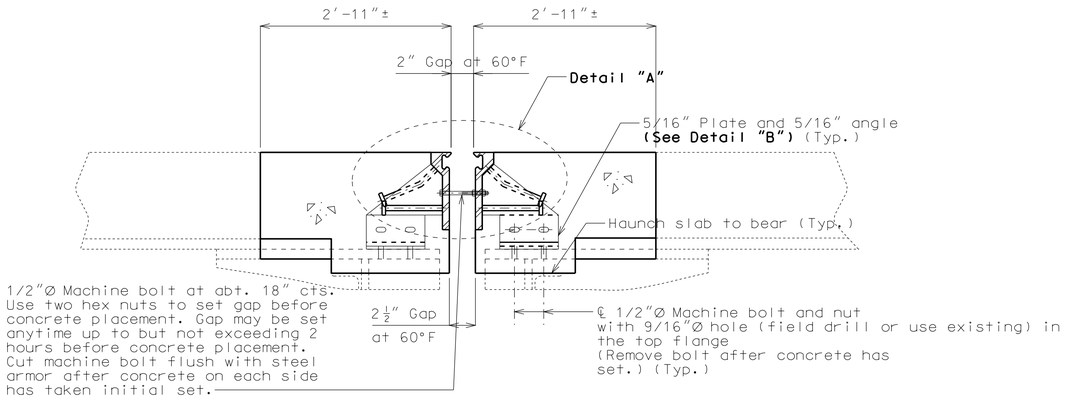

SECTION A-A

Note: Strip seal gland not shown for clarity.

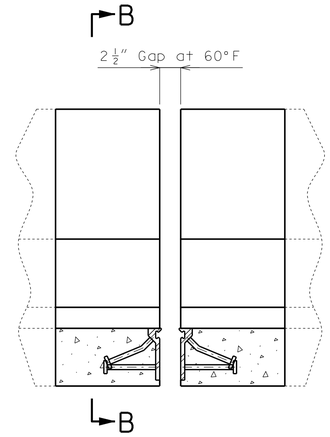

Note: Strip seal gland not shown for clarity.

PART ELEVATION OF BARRIER CURB

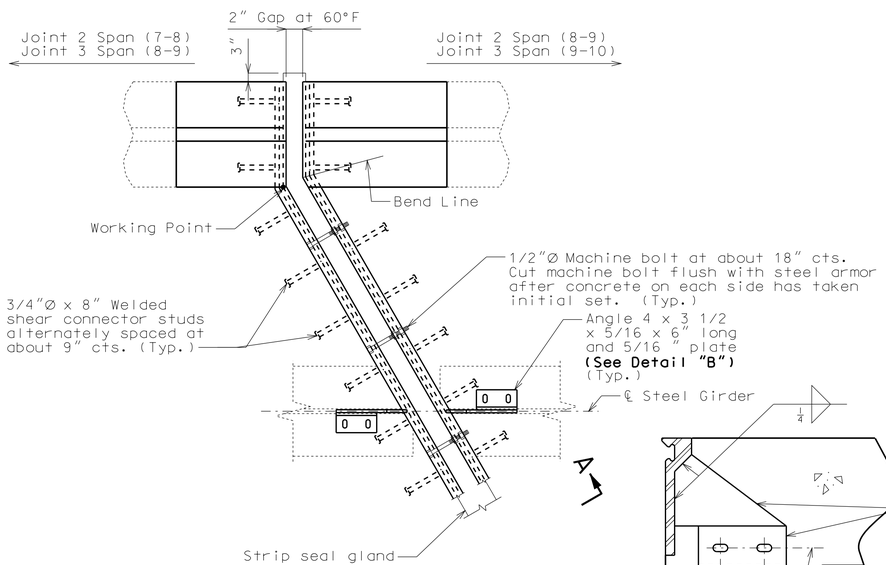

PART PLAN

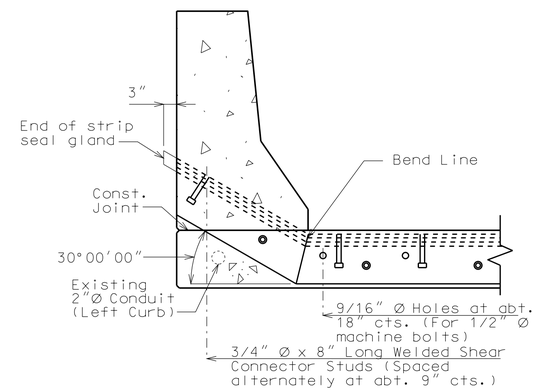

PART SECTION B-B

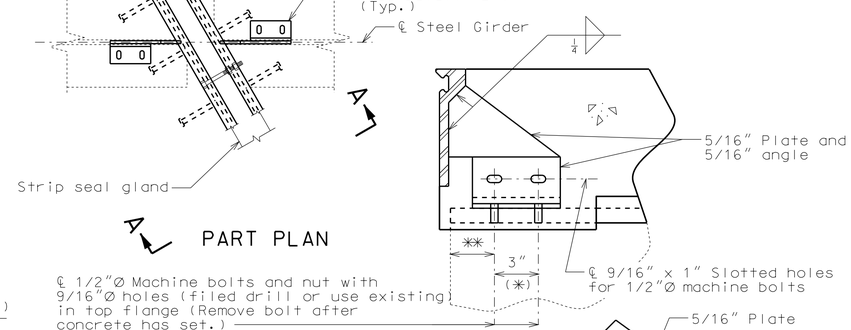

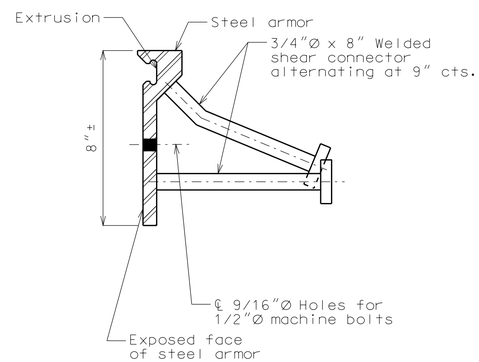

DETAIL OF JOINT ARMOR

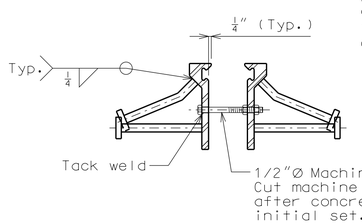

DETAIL "A"

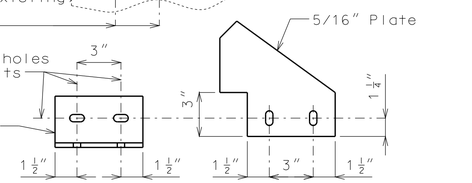

DETAIL "B"

GENERAL NOTES:

Expansion joint system shall be fabricated in one section, except for stage construction and when the length is over 50 feet. A complete joint penetration groove welded splice shall be required. Welds shall be ground flush to provide a smooth surface. The expansion joint system shall be fabricated and installed to the crown and grade of the roadway.

The strip seal gland shall be installed in joints in one continuous piece without field splices. Factory splicing will be permitted for joints in excess of 53 feet.

Structural steel for the expansion joint system shall be ASTM A709 Grade 36 except the steel armor may be ASTM A709 Grade 50W. Anchors for the expansion joint system shall be in accordance with Sec 1037. Strip seal expansion joint system shall be in accordance with Sec 717.

Structural steel for the expansion joint system shall be coated with a minimum of two coats of inorganic zinc primer (5 mils minimum) or galvanized in accordance with ASTM A123. Anchors need not be protected from overspray.

Plan dimensions are based on installation at 60°F. The expansion gap and other dimensions shall be increased or decreased 3/16" Joints 2 & 3 each 10° fall or rise in temperature at installation.

New longitudinal reinforcing steel shall be placed and existing longitudinal reinforcing steel shall be cut/bent so that ends shall not be more than ±1" from vertical leg of the steel armor at the expansion joint system.

Concrete shall be forced under and around steel armor and anchors. Proper consolidation of the concrete shall be achieved by localized internal vibration.

(*) Match existing.

** Joint 2 - 1¾" (*) Span (7-8), 2½" (*) Span (8-9)

Joint 3 - 2½" (*) Span (8-9), 1¾" (*) Span (9-10)

Strip seal gland size = 4"

DETAIL OF GLAND

DETAILS OF STRIP SEAL AT EXPANSION JOINT 2 NEAR INTERMEDIATE BENT NO. 8 & EXPANSION JOINT 3 NEAR INTERMEDIATE BENT NO. 9

Detailed Dec. 2013
Checked Dec. 2013

Note: This drawing is not to scale. Follow dimensions.

"THIS MEDIA SHOULD NOT BE CONSIDERED A CERTIFIED DOCUMENT."

DATE PREPARED	
1/13/2014	
ROUTE	STATE
I-670	MO
DISTRICT	SHEET NO.
BR	4
COUNTY	
JACKSON	
JOB NO.	
J4P2191	
CONTRACT ID.	
PROJECT NO.	
BRIDGE NO.	
A31361	

DATE	DESCRIPTION

MISSOURI HIGHWAYS AND TRANSPORTATION COMMISSION
105 WEST CAPITOL
JEFFERSON CITY, MO 65102
1-888-ASK-MODOT (1-888-275-6636)

IF A SEAL IS PRESENT ON THIS SHEET IT HAS BEEN ELECTRONICALLY SEALED AND DATED.

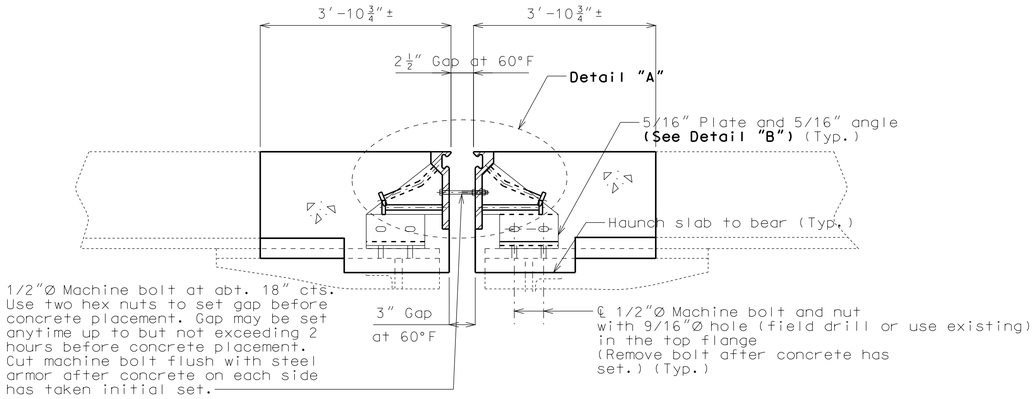

SECTION A-A

Note: Strip seal gland not shown for clarity.

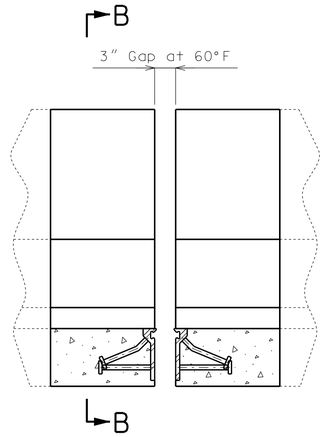

Note: Strip seal gland not shown for clarity.

PART ELEVATION OF BARRIER CURB

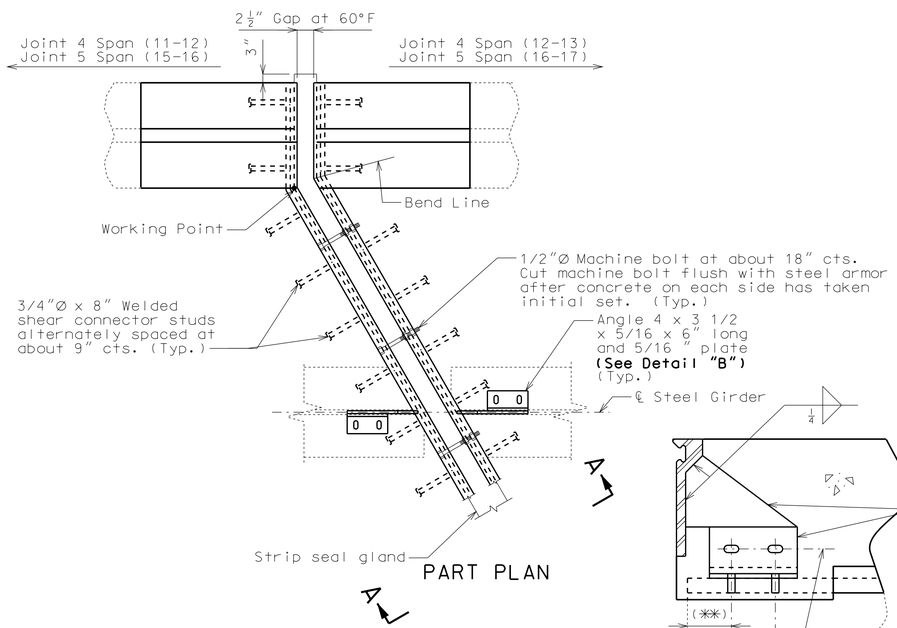

PART PLAN

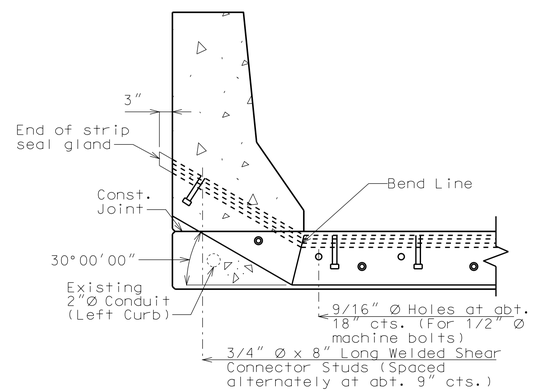

(✱✱) Joint 4 - 2 1/2" (✱) Span (11-12), 2" (✱) Span (12-13)
Joint 5 - 2 1/2" (✱) Span (15-16), 2" (✱) Span (16-17)

PART SECTION B-B

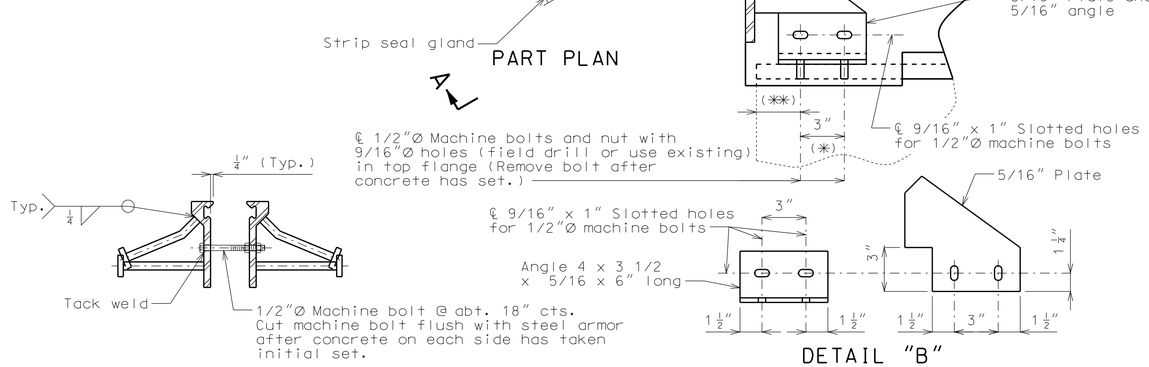

DETAIL "A"

DETAIL "B"

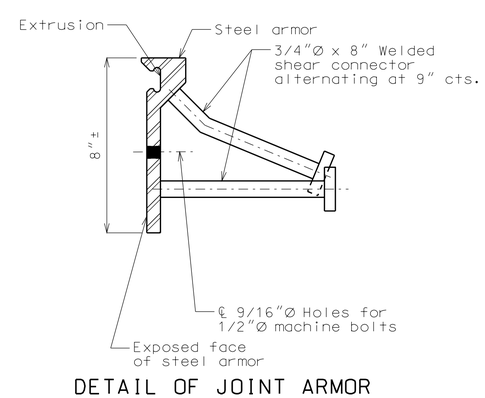

DETAIL OF JOINT ARMOR

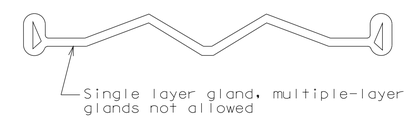

Strip seal gland size = 5"

DETAIL OF GLAND

GENERAL NOTES:

Expansion joint system shall be fabricated in one section, except for stage construction and when the length is over 50 feet. A complete joint penetration groove welded splice shall be required. Welds shall be ground flush to provide a smooth surface. The expansion joint system shall be fabricated and installed to the crown and grade of the roadway.

The strip seal gland shall be installed in joints in one continuous piece without field splices. Factory splicing will be permitted for joints in excess of 53 feet.

Structural steel for the expansion joint system shall be ASTM A709 Grade 36 except the steel armor may be ASTM A709 Grade 50W. Anchors for the expansion joint system shall be in accordance with Sec 1037. Strip seal expansion joint system shall be in accordance with Sec 717.

Structural steel for the expansion joint system shall be coated with a minimum of two coats of inorganic zinc primer (5 mils minimum) or galvanized in accordance with ASTM A123. Anchors need not be protected from overspray.

Plan dimensions are based on installation at 60°F. The expansion gap and other dimensions shall be increased or decreased 1/4" for each 10° fall or rise in temperature at installation.

New longitudinal reinforcing steel shall be placed and existing longitudinal reinforcing steel shall be cut/bent so that ends shall not be more than ±1" from vertical leg of the steel armor at the expansion joint system.

Concrete shall be forced under and around steel armor and anchors. Proper consolidation of the concrete shall be achieved by localized internal vibration.

(✱) Match existing.

DETAILS OF STRIP SEAL AT EXPANSION JOINTS 4 & 5 NEAR INTERMEDIATE BENTS NO. 12 & 16

Detailed Dec. 2013
Checked Dec. 2013

Note: This drawing is not to scale. Follow dimensions.

"THIS MEDIA SHOULD NOT BE CONSIDERED A CERTIFIED DOCUMENT."

DATE PREPARED	
1/13/2014	
ROUTE	STATE
I-670	MO
DISTRICT	SHEET NO.
BR	5
COUNTY	
JACKSON	
JOB NO.	
J4P2191	
CONTRACT ID.	
PROJECT NO.	
BRIDGE NO.	
A31361	

DATE	DESCRIPTION

IF A SEAL IS PRESENT ON THIS SHEET IT HAS BEEN ELECTRONICALLY SEALED AND DATED.

MISSOURI HIGHWAYS AND TRANSPORTATION COMMISSION
105 WEST CAPITOL
JEFFERSON CITY, MO 65102
1-888-ASK-MODOT (1-888-275-6636)

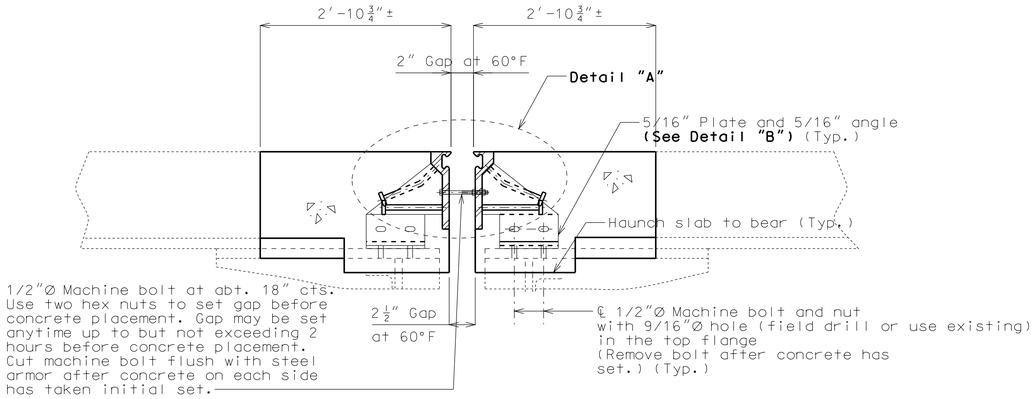

SECTION A-A

Note: Strip seal gland not shown for clarity.

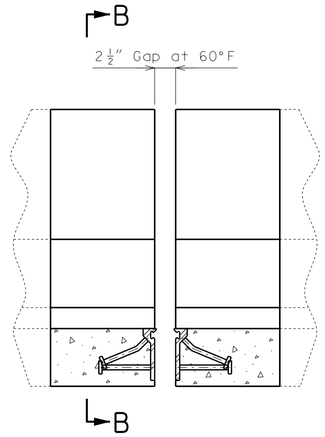

Note: Strip seal gland not shown for clarity.

PART ELEVATION OF BARRIER CURB

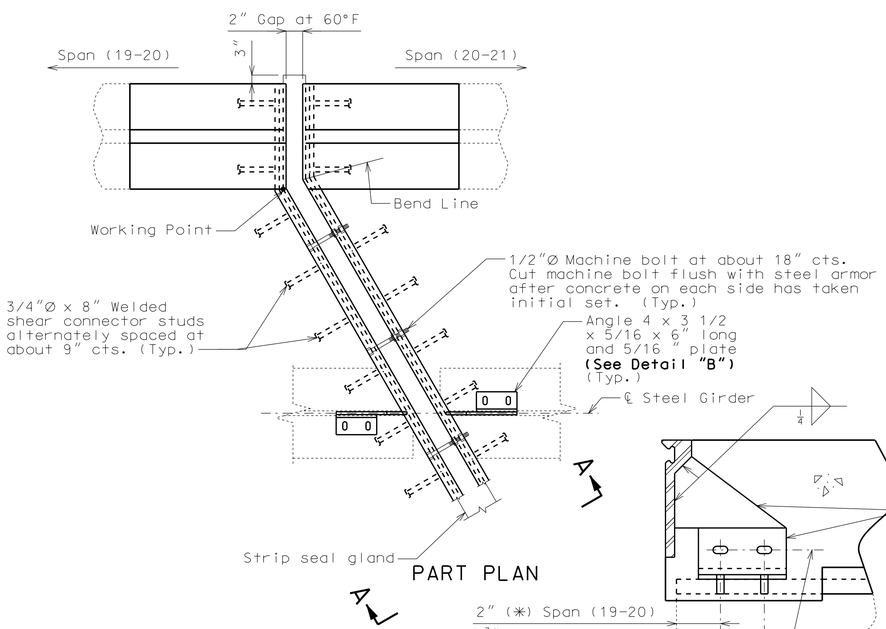

PART PLAN

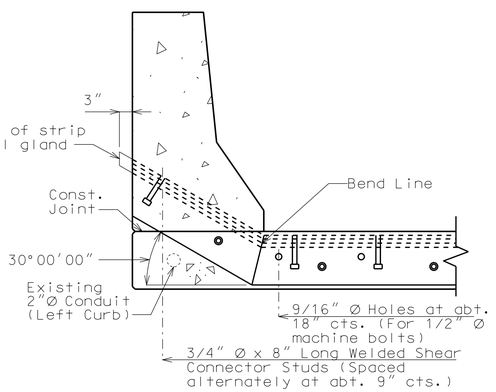

PART SECTION B-B

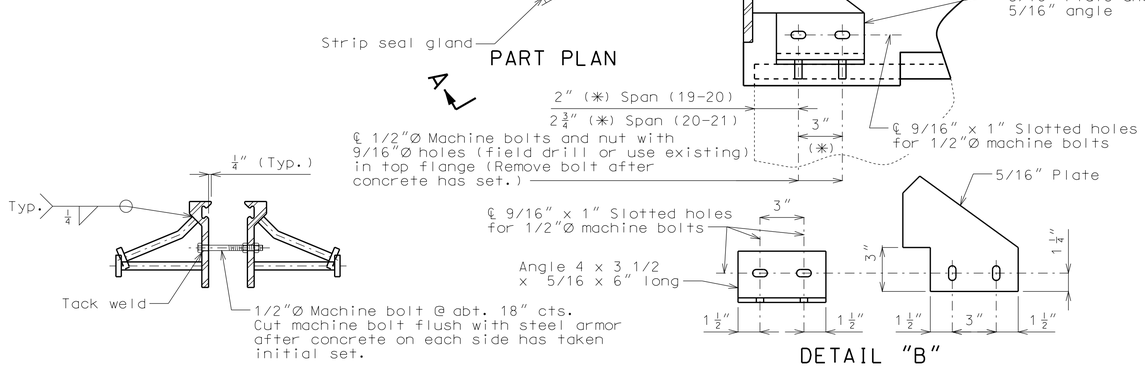

DETAIL "A"

DETAIL "B"

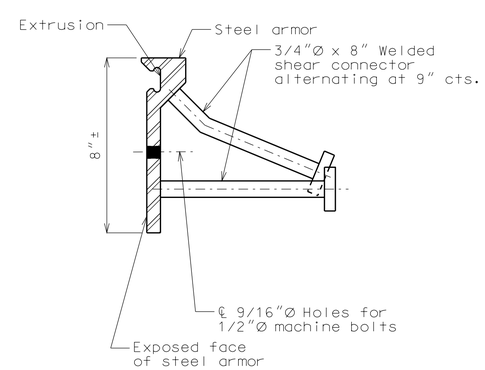

DETAIL OF JOINT ARMOR

Strip seal gland size = 4"

DETAIL OF GLAND

GENERAL NOTES:

Expansion joint system shall be fabricated in one section, except for stage construction and when the length is over 50 feet. A complete joint penetration groove welded splice shall be required. Welds shall be ground flush to provide a smooth surface. The expansion joint system shall be fabricated and installed to the crown and grade of the roadway.

The strip seal gland shall be installed in joints in one continuous piece without field splices. Factory splicing will be permitted for joints in excess of 53 feet.

Structural steel for the expansion joint system shall be ASTM A709 Grade 36 except the steel armor may be ASTM A709 Grade 50W. Anchors for the expansion joint system shall be in accordance with Sec 1037. Strip seal expansion joint system shall be in accordance with Sec 717.

Structural steel for the expansion joint system shall be coated with a minimum of two coats of inorganic zinc primer (5 mils minimum) or galvanized in accordance with ASTM A123. Anchors need not be protected from overspray.

Plan dimensions are based on installation at 60°F. The expansion gap and other dimensions shall be increased or decreased 1/4" for each 10° fall or rise in temperature at installation.

New longitudinal reinforcing steel shall be placed and existing longitudinal reinforcing steel shall be cut/bent so that ends shall not be more than ±1" from vertical leg of the steel armor at the expansion joint system.

Concrete shall be forced under and around steel armor and anchors. Proper consolidation of the concrete shall be achieved by localized internal vibration.

(✳) Match existing.

"THIS MEDIA SHOULD NOT BE CONSIDERED A CERTIFIED DOCUMENT."

DATE PREPARED	
1/13/2014	
ROUTE	STATE
I-670	MO
DISTRICT	SHEET NO.
BR	6
COUNTY	
JACKSON	
JOB NO.	
J4P2191	
CONTRACT ID.	
PROJECT NO.	
BRIDGE NO.	
A31361	

DATE	DESCRIPTION

IF A SEAL IS PRESENT ON THIS SHEET IT HAS BEEN ELECTRONICALLY SEALED AND DATED.

MISSOURI HIGHWAYS AND TRANSPORTATION COMMISSION

105 WEST CAPITOL
JEFFERSON CITY, MO 65102
1-888-ASK-MODOT (1-888-275-6636)

DETAILS OF STRIP SEAL AT EXPANSION JOINT 6 NEAR INTERMEDIATE BENT NO. 20

Detailed Dec. 2013
Checked Dec. 2013

Note: This drawing is not to scale. Follow dimensions.

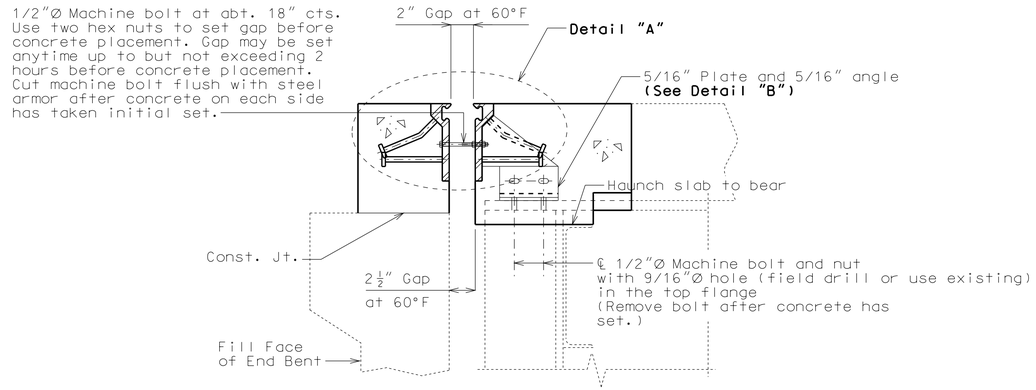

SECTION A-A

Note: Strip seal gland not shown for clarity.

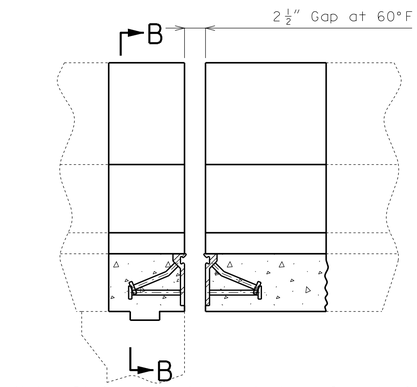

Note: Strip seal gland not shown for clarity.

PART ELEVATION OF BARRIER CURB

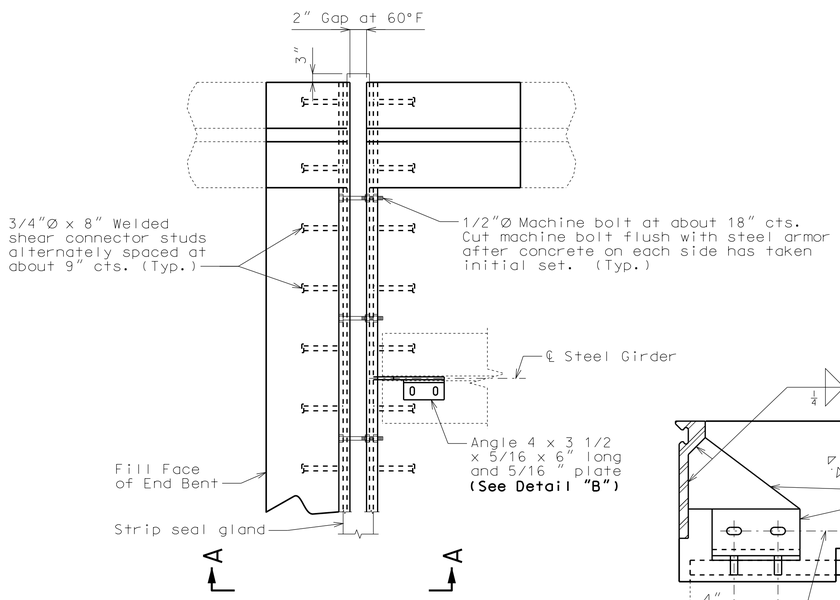

PART PLAN

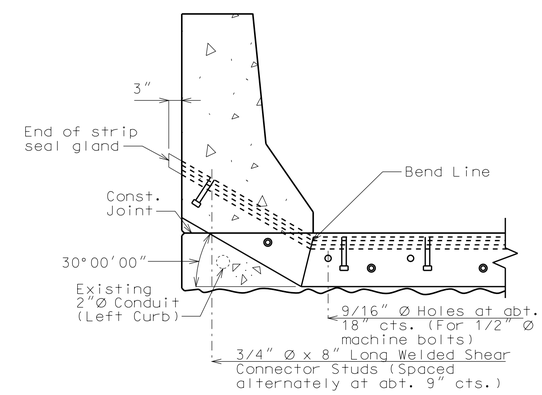

PART SECTION B-B

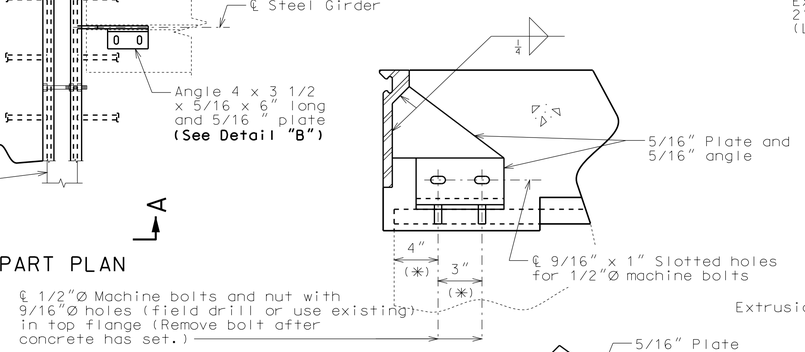

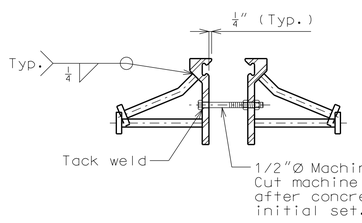

DETAIL "A"

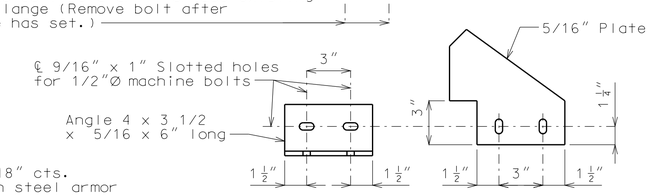

DETAIL "B"

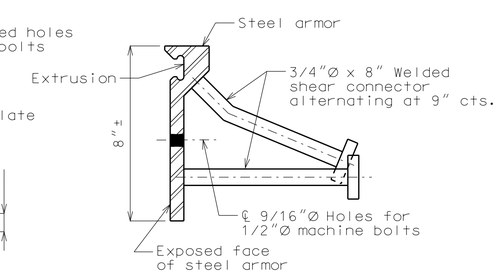

DETAIL OF JOINT ARMOR

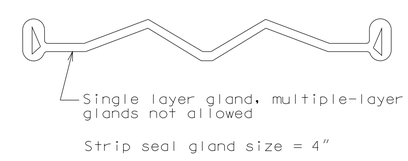

Strip seal gland size = 4"

DETAIL OF GLAND

GENERAL NOTES:

Expansion joint system shall be fabricated in one section, except for stage construction and when the length is over 50 feet. A complete joint penetration groove welded splice shall be required. Welds shall be ground flush to provide a smooth surface. The expansion joint system shall be fabricated and installed to the crown and grade of the roadway.

The strip seal gland shall be installed in joints in one continuous piece without field splices. Factory splicing will be permitted for joints in excess of 53 feet.

Structural steel for the expansion joint system shall be ASTM A709 Grade 36 except the steel armor may be ASTM A709 Grade 50W. Anchors for the expansion joint system shall be in accordance with Sec 1037. Strip seal expansion joint system shall be in accordance with Sec 717.

Structural steel for the expansion joint system shall be coated with a minimum of two coats of inorganic zinc primer (5 mils minimum) or galvanized in accordance with ASTM A123. Anchors need not be protected from overspray.

Plan dimensions are based on installation at 60°F. The expansion gap and other dimensions shall be increased or decreased 1/8" for each 10° fall or rise in temperature at installation.

New longitudinal reinforcing steel shall be placed and existing longitudinal reinforcing steel shall be cut/bent so that ends shall not be more than ±1" from vertical leg of the steel armor at the expansion joint system.

Concrete shall be forced under and around steel armor and anchors. Proper consolidation of the concrete shall be achieved by localized internal vibration.

(*) Match existing.

DETAILS OF STRIP SEAL AT EXPANSION JOINT 10 NEAR END BENT NO. 30

Note: This drawing is not to scale. Follow dimensions.

Detailed Dec. 2013
Checked Dec. 2013

"THIS MEDIA SHOULD NOT BE CONSIDERED A CERTIFIED DOCUMENT."

DATE PREPARED	1/13/2014
ROUTE	I-670
STATE	MO
DISTRICT	BR
SHEET NO.	7
COUNTY	JACKSON
JOB NO.	J4P2191
CONTRACT ID.	
PROJECT NO.	
BRIDGE NO.	A31361

DESCRIPTION

DATE

MISSOURI HIGHWAYS AND TRANSPORTATION COMMISSION
105 WEST CAPITOL
JEFFERSON CITY, MO 65102
1-888-ASK-MODOT (1-888-275-6636)

IF A SEAL IS PRESENT ON THIS SHEET IT HAS BEEN ELECTRONICALLY SEALED AND DATED.

REV.

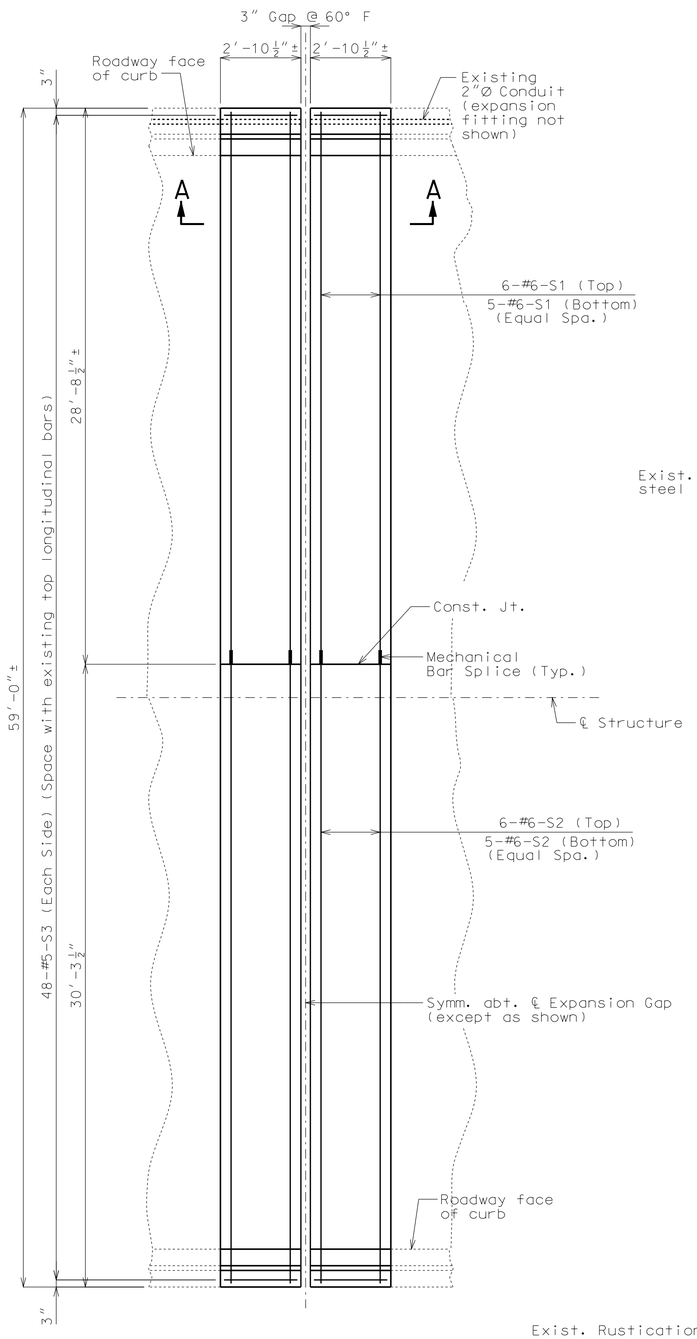

PART PLAN OF SLAB AT EXPANSION JOINT NO. 1
NEAR INT. BENT NO. 4
SHOWING REINFORCEMENT

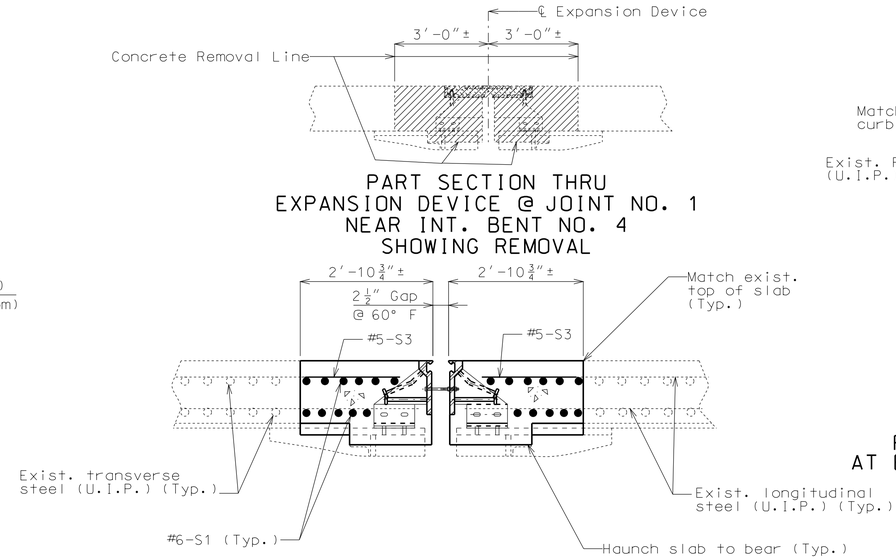

PART SECTION THRU
EXPANSION DEVICE @ JOINT NO. 1
NEAR INT. BENT NO. 4
SHOWING REMOVAL

SECTION A-A
Note: Strip deal gland not shown for clarity.

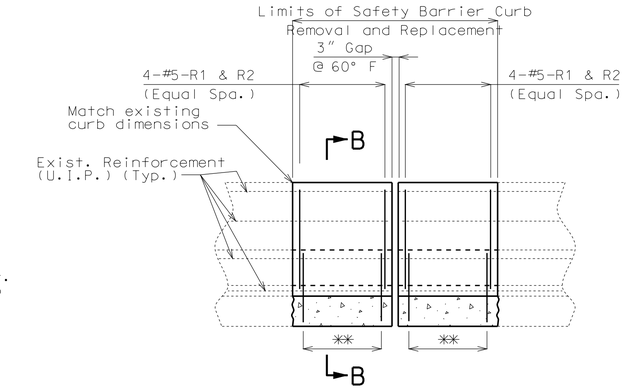

** 4-#5-R3 & R4 spaced with #5-R1 & R2

PART ELEVATION SHOWING
RIGHT SAFETY BARRIER CURB REINFORCEMENT
AT EXPANSION JOINT NO. 1 NEAR INT. BENT NO. 4

Note: Expansion device not shown for clarity.

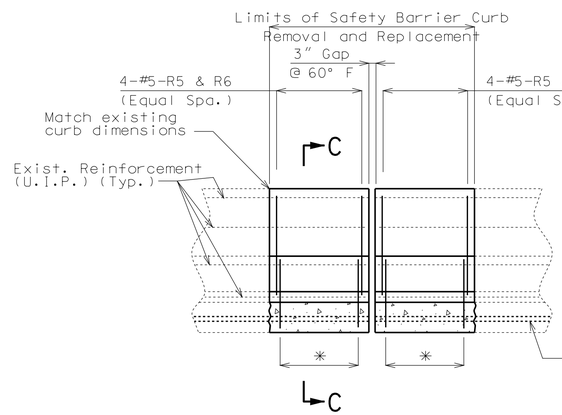

* 4-#5-R7 & R8 spaced with #5-R5 & R6

PART ELEVATION SHOWING
LEFT SAFETY BARRIER CURB REINFORCEMENT
AT EXPANSION JOINT NO. 1 NEAR INT. BENT NO. 4

Note: Expansion device not shown for clarity.

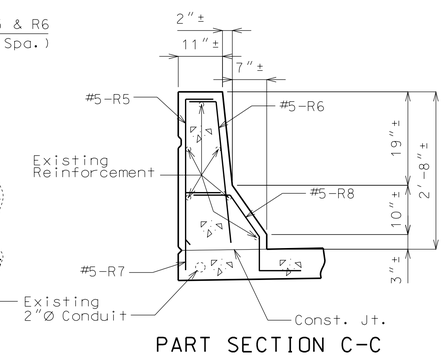

PART SECTION C-C

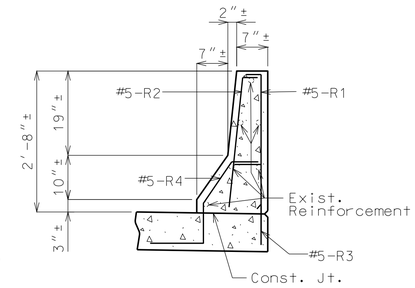

PART SECTION B-B

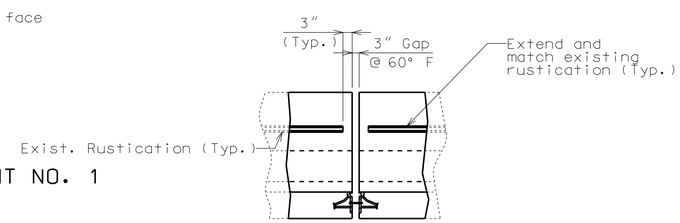

PART ELEVATION SHOWING PARTIAL
SAFETY BARRIER CURB REPLACEMENT

Note: Strip seal gland not shown for clarity.

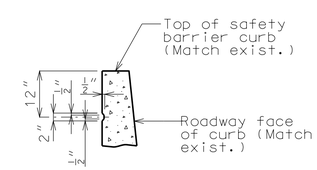

PART SECTION SHOWING
RUSTICATION DETAILS

Notes:

All exposed edges of new barrier curb shall match existing barrier curb.

Payment for concrete curb removal and all new concrete and reinforcement for barrier curb, complete-in-place, will be considered completely covered by the contract unit price for Remove and Replace Barrier Curb per linear foot.

Shift S-bars where necessary to clear the expansion device.

The contractor shall use a mechanical bar splice for #6-S1 & #6-S2 bars at the specified location. The total bar lengths for bars indicated in the bill of reinforcing steel are determined based on the end of the bars being located flush to the face of the construction joint. No additional payment will be made for any additional bar lengths required for the mechanical bar splices. Mechanical bar splices shall be in accordance with Sec 706 except that no measurement will be made for mechanical bar splice and will be considered completely covered by the contract unit price for Reinforcing Steel (Epoxy Coated).

DETAILS OF SLAB AND BARRIER CURB AT EXPANSION JOINT 1 NEAR INTERMEDIATE BENT NO. 4

Note: This drawing is not to scale. Follow dimensions.

Detailed Dec. 2013
Checked Dec. 2013

"THIS MEDIA SHOULD NOT BE CONSIDERED A CERTIFIED DOCUMENT."

DATE PREPARED	1/13/2014
ROUTE	I-670
STATE	MO
DISTRICT	BR
SHEET NO.	8
COUNTY	JACKSON
JOB NO.	J4P2191
CONTRACT ID.	
PROJECT NO.	
BRIDGE NO.	A31361

DESCRIPTION

DATE

MISSOURI HIGHWAYS AND TRANSPORTATION COMMISSION
105 WEST CAPITOL
JEFFERSON CITY, MO 65102
1-888-ASK-MODOT (1-888-275-6636)

IF A SEAL IS PRESENT ON THIS SHEET IT HAS BEEN ELECTRONICALLY SEALED AND DATED.

Notes:

Top of safety barrier curb shall be built parallel to grade.

All exposed edges of safety barrier curb shall have either a $\frac{1}{2}''$ radius or a $\frac{3}{8}''$ bevel, unless otherwise noted.

Concrete in the safety barrier curb replacement shall be Class B-1.

All exposed edges of new safety barrier curb shall match existing safety barrier curb.

Payment for all curb concrete and reinforcing steel, complete-in-place, will be considered completely covered by the contract unit price for Remove and Replace Barrier Curb.

All existing longitudinal reinforcement in the safety barrier curb shall be cleaned and reused.

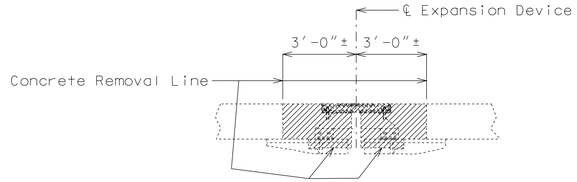

PART SECTION THRU
EXPANSION JOINTS NO. 2 & 3
NEAR INTERMEDIATE BENTS NO. 8 & 9
SHOWING REMOVAL

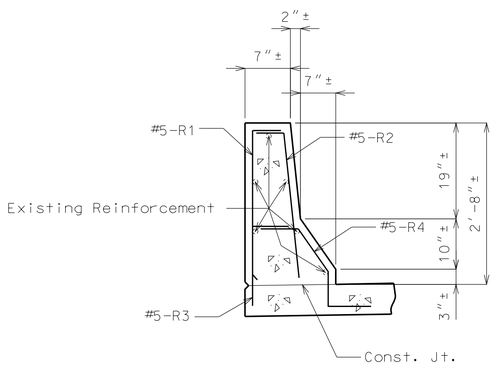

PART SECTION A-A

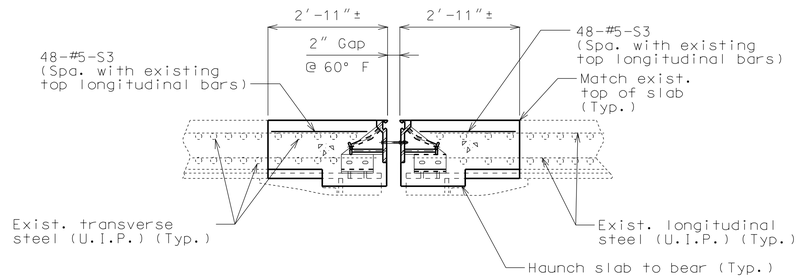

PART SECTION THRU EXPANSION JOINT NO. 2
NEAR INTERMEDIATE BENT NO. 8 &
EXPANSION JOINT NO. 3 NEAR INTERMEDIATE BENT NO. 9
SHOWING REINFORCEMENT

Note: Strip seal gland not shown for clarity.

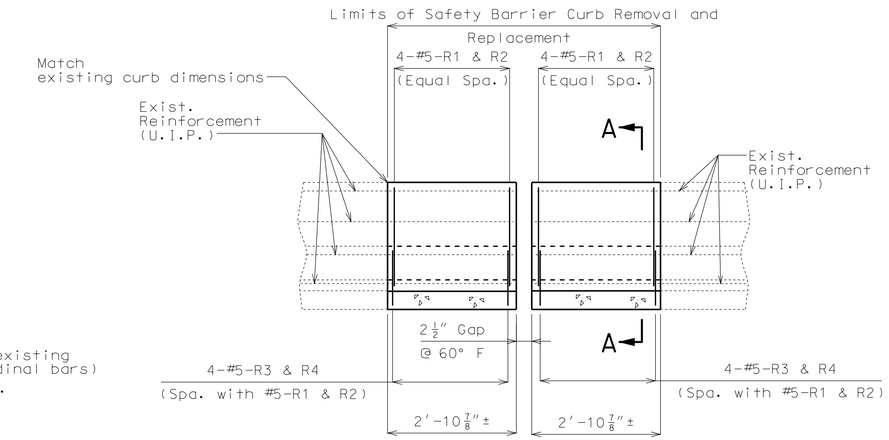

PART ELEVATION RIGHT SIDE AT EXPANSION JOINT NO. 2
NEAR INTERMEDIATE BENT NO. 8 &
EXPANSION JOINT NO. 3 NEAR INTERMEDIATE BENT NO. 9
SHOWING BARRIER CURB REINFORCEMENT

Note: Expansion device not shown for clarity.

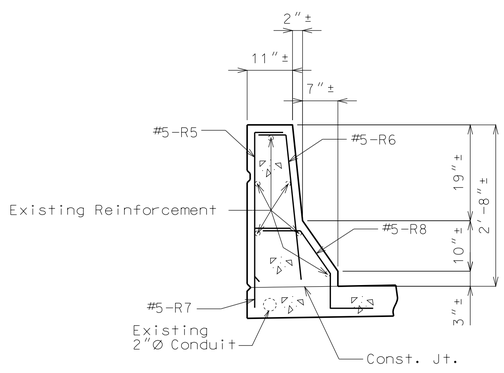

PART SECTION B-B

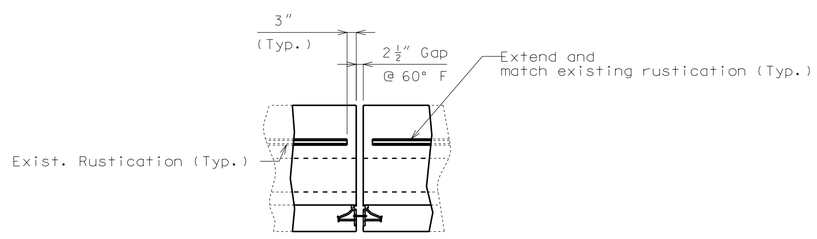

PART ELEVATION SHOWING PARTIAL
SAFETY BARRIER CURB REPLACEMENT

Note: Strip seal gland not shown for clarity.

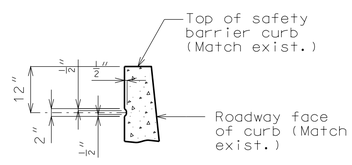

PART SECTION SHOWING
RUSTICATION DETAILS

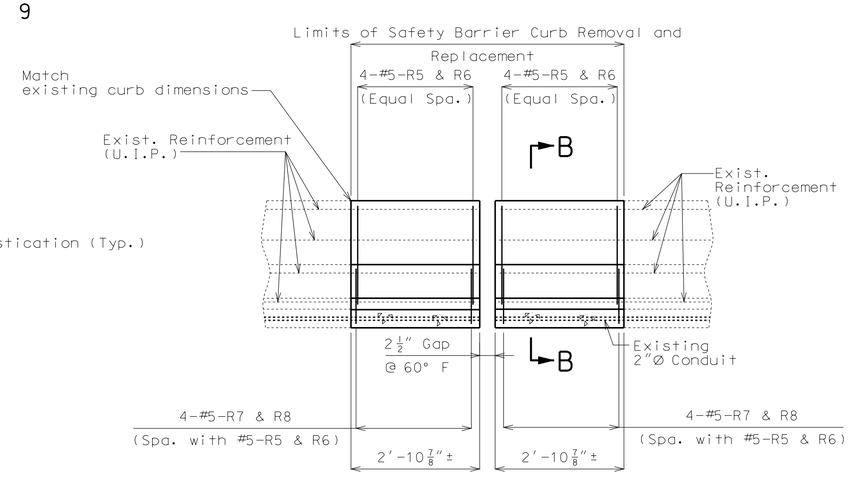

PART ELEVATION LEFT SIDE AT EXPANSION JOINT NO. 2
NEAR INTERMEDIATE BENT NO. 8 &
EXPANSION JOINT NO. 3 NEAR INTERMEDIATE BENT NO. 9
SHOWING BARRIER CURB REINFORCEMENT

Note: Expansion device not shown for clarity.

DETAILS OF SLAB AND BARRIER CURB AT EXPANSION JOINTS NO. 2 & 3 NEAR INTERMEDIATE BENTS NO. 8 & 9

Detailed Dec. 2013
Checked Dec. 2013

Note: This drawing is not to scale. Follow dimensions.

"THIS MEDIA SHOULD NOT BE CONSIDERED A CERTIFIED DOCUMENT."

DATE PREPARED	
1/13/2014	
ROUTE	STATE
I-670	MO
DISTRICT	SHEET NO.
BR	9
COUNTY	
JACKSON	
JOB NO.	
J4P2191	
CONTRACT ID.	
PROJECT NO.	
BRIDGE NO.	
A31361	

DATE	DESCRIPTION

MISSOURI HIGHWAYS AND TRANSPORTATION COMMISSION
105 WEST CAPITOL
JEFFERSON CITY, MO 65102
1-888-ASK-MODOT (1-888-275-6636)

IF A SEAL IS PRESENT ON THIS SHEET IT HAS BEEN ELECTRONICALLY SEALED AND DATED.

Notes:

Top of safety barrier curb shall be built parallel to grade.

All exposed edges of safety barrier curb shall have either a $\frac{1}{2}''$ radius or a $\frac{3}{8}''$ bevel, unless otherwise noted.

Concrete in the safety barrier curb replacement shall be Class B-1.

All exposed edges of new safety barrier curb shall match existing safety barrier curb.

Payment for all curb concrete and reinforcing steel, complete-in-place, will be considered completely covered by the contract unit price for Remove and Replace Barrier Curb.

All existing longitudinal reinforcement in the safety barrier curb shall be cleaned and reused.

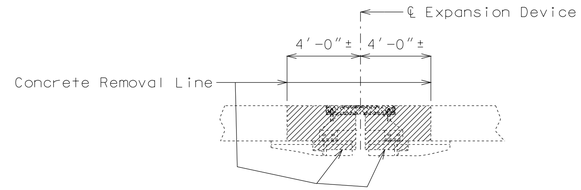

PART SECTION THRU EXPANSION JOINTS NO. 4 & 5
NEAR INTERMEDIATE BENTS NO. 12 & 16 SHOWING REMOVAL

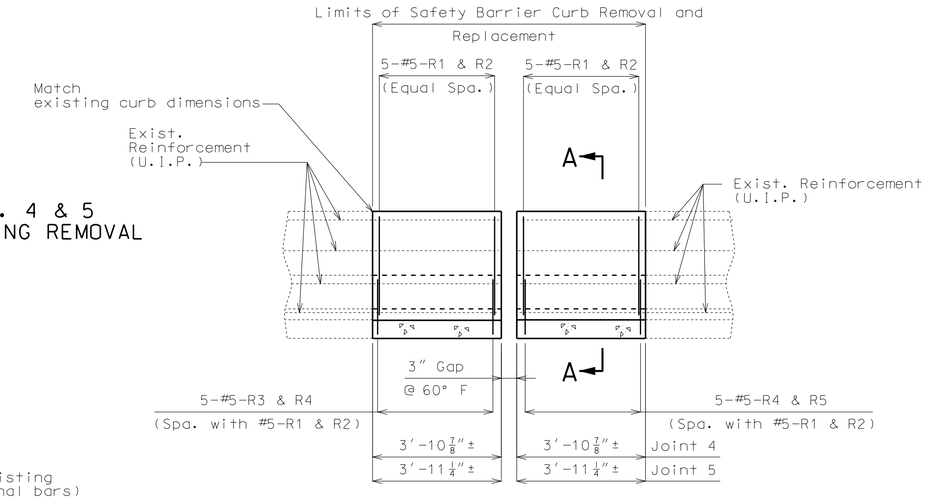

PART ELEVATION RIGHT SIDE AT EXPANSION JOINTS NO. 4 & 5
NEAR INTERMEDIATE BENTS NO. 12 & 16 SHOWING BARRIER CURB REINFORCEMENT

Note: Expansion device not shown for clarity.

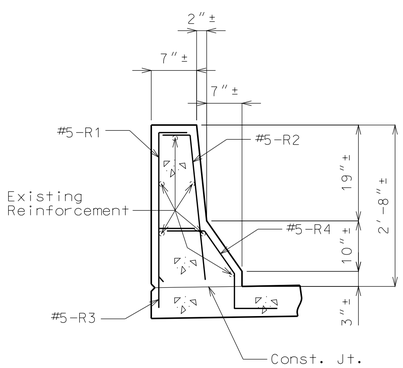

PART SECTION A-A

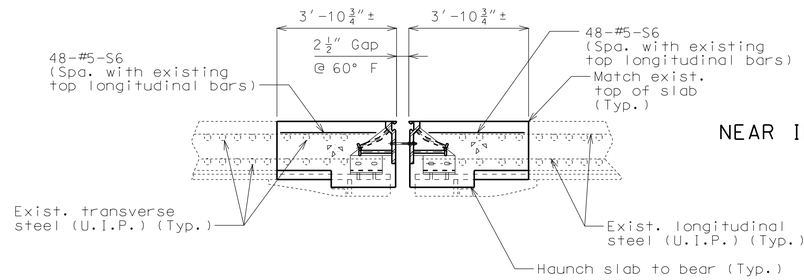

PART SECTION AT EXPANSION JOINTS NO. 4 & 5
NEAR INTERMEDIATE BENTS NO. 12 & 16 SHOWING REINFORCEMENT

Note: Strip seal gland not shown for clarity.

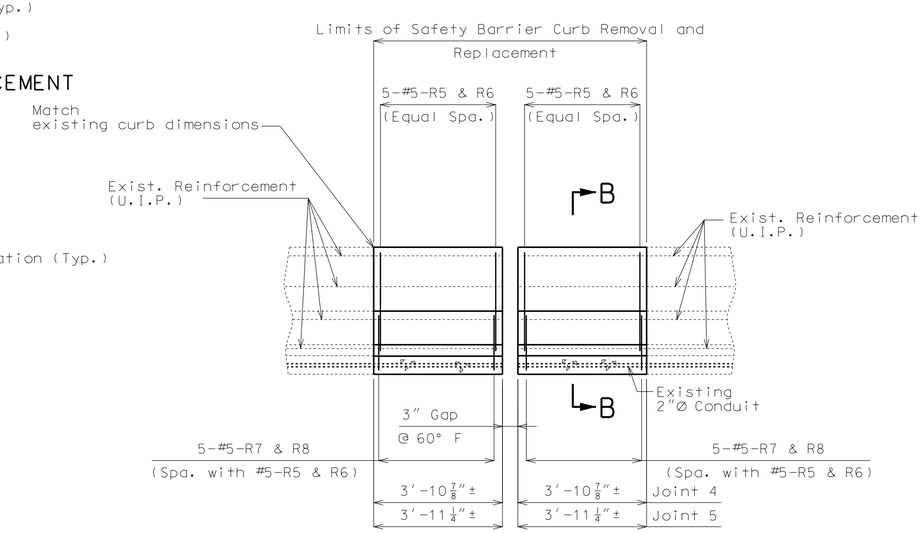

PART ELEVATION LEFT SIDE AT EXPANSION JOINTS NO. 4 & 5
NEAR INTERMEDIATE BENTS NO. 12 & 16 SHOWING BARRIER CURB REINFORCEMENT

Note: Expansion device not shown for clarity.

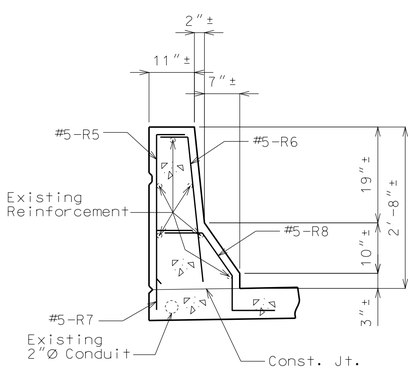

PART SECTION B-B

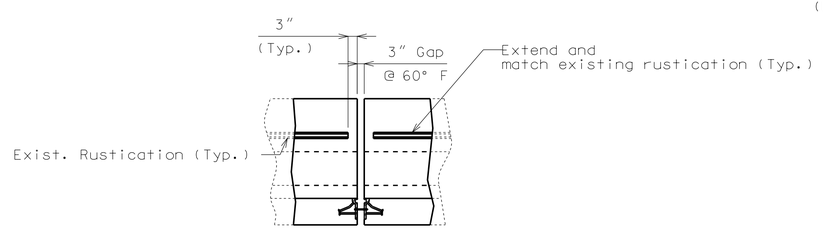

PART ELEVATION SHOWING PARTIAL
SAFETY BARRIER CURB REPLACEMENT

Note: Strip seal gland not shown for clarity.

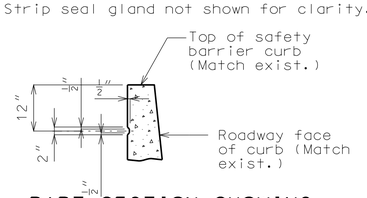

PART SECTION SHOWING
RUSTICATION DETAILS

DETAILS OF SLAB AND BARRIER CURB AT EXPANSION JOINTS NO. 4 & 5 NEAR INTERMEDIATE BENTS NO. 12 & 16

Detailed Dec. 2013
Checked Dec. 2013

Note: This drawing is not to scale. Follow dimensions.

"THIS MEDIA SHOULD NOT BE CONSIDERED A CERTIFIED DOCUMENT."

DATE PREPARED	
1/13/2014	
ROUTE	STATE
I-670	MO
DISTRICT	SHEET NO.
BR	10
COUNTY	
JACKSON	
JOB NO.	
J4P2191	
CONTRACT ID.	
PROJECT NO.	
BRIDGE NO.	
A31361	

DESCRIPTION

DATE

MISSOURI HIGHWAYS AND TRANSPORTATION COMMISSION

105 WEST CAPITOL
JEFFERSON CITY, MO 65102
1-888-ASK-MODOT (1-888-275-6636)

IF A SEAL IS PRESENT ON THIS SHEET IT HAS BEEN ELECTRONICALLY SEALED AND DATED.

Notes:

Top of safety barrier curb shall be built parallel to grade.

All exposed edges of safety barrier curb shall have either a $\frac{1}{2}''$ radius or a $\frac{3}{8}''$ bevel, unless otherwise noted.

Concrete in the safety barrier curb replacement shall be Class B-1.

All exposed edges of new safety barrier curb shall match existing safety barrier curb.

Payment for all curb concrete and reinforcing steel, complete-in-place, will be considered completely covered by the contract unit price for Remove and Replace Barrier Curb.

All existing longitudinal reinforcement in the safety barrier curb shall be cleaned and reused.

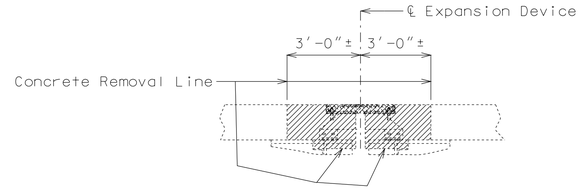

PART SECTION THRU EXPANSION JOINT NO. 6
NEAR INTERMEDIATE BENT NO. 20 SHOWING REMOVAL

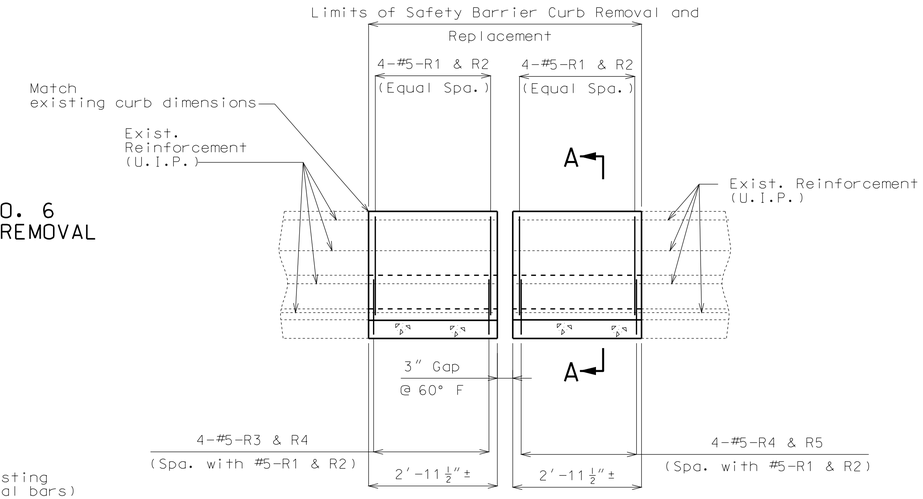

PART ELEVATION RIGHT SIDE AT EXPANSION JOINT NO. 6
NEAR INTERMEDIATE BENT NO. 20 SHOWING BARRIER CURB REINFORCEMENT

Note: Expansion device not shown for clarity.

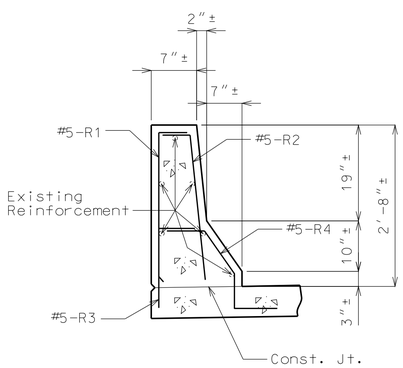

PART SECTION A-A

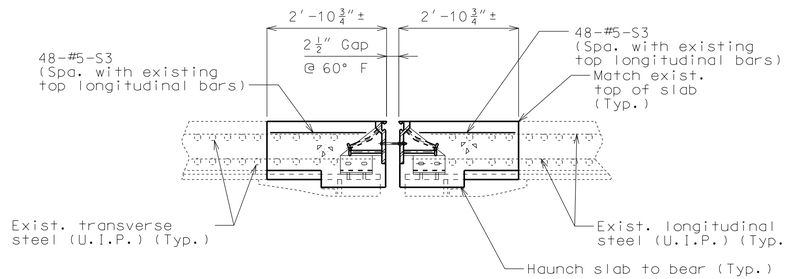

PART SECTION AT EXPANSION JOINT NO. 6
NEAR INTERMEDIATE BENT NO. 20 SHOWING REINFORCEMENT

Note: Strip seal gland not shown for clarity.

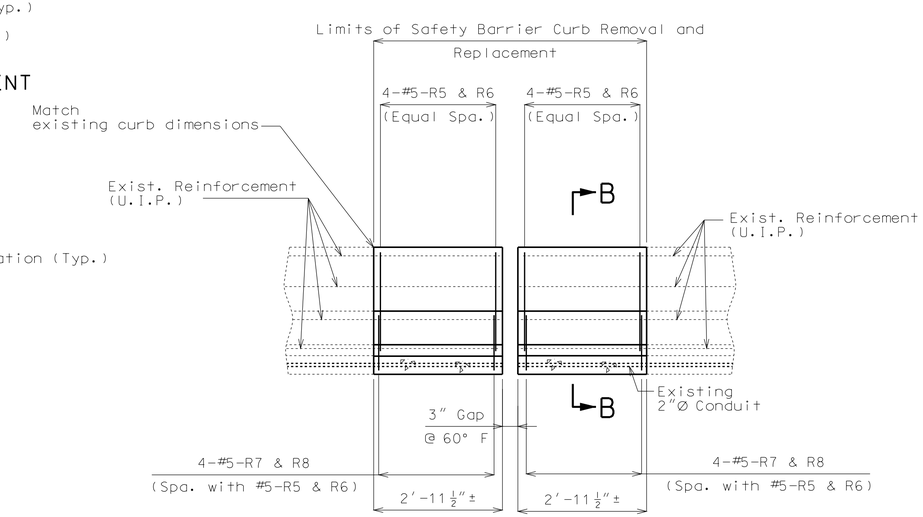

PART ELEVATION LEFT SIDE AT EXPANSION JOINT NO. 6
NEAR INTERMEDIATE BENT NO. 20 SHOWING BARRIER CURB REINFORCEMENT

Note: Expansion device not shown for clarity.

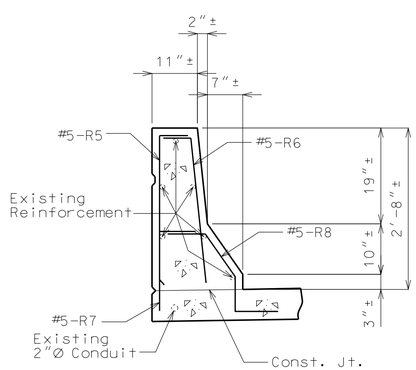

PART SECTION B-B

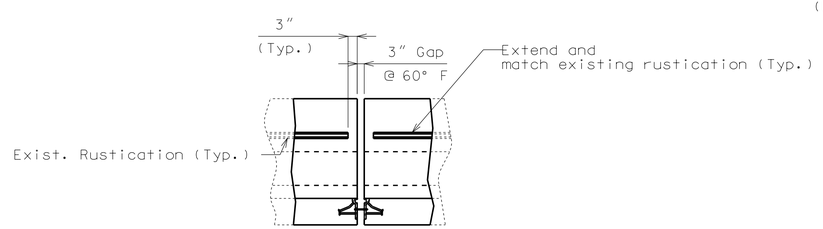

PART ELEVATION SHOWING PARTIAL
SAFETY BARRIER CURB REPLACEMENT

Note: Strip seal gland not shown for clarity.

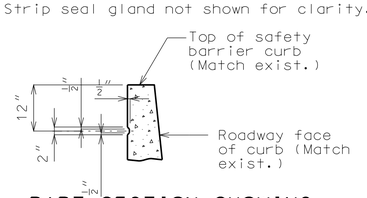

PART SECTION SHOWING
RUSTICATION DETAILS

DETAILS OF SLAB AND BARRIER CURB AT EXPANSION JOINT NO. 6 NEAR INTERMEDIATE BENT NO. 20

Note: This drawing is not to scale. Follow dimensions.

Detailed Dec. 2013
Checked Dec. 2013

"THIS MEDIA SHOULD NOT BE CONSIDERED A CERTIFIED DOCUMENT."

DATE PREPARED	
1/13/2014	
ROUTE	STATE
I-670	MO
DISTRICT	SHEET NO.
BR	11
COUNTY	
JACKSON	
JOB NO.	
J4P2191	
CONTRACT ID.	
PROJECT NO.	
BRIDGE NO.	
A31361	

DESCRIPTION

DATE

MISSOURI HIGHWAYS AND TRANSPORTATION COMMISSION
105 WEST CAPITOL
JEFFERSON CITY, MO 65102
1-888-ASK-MODOT (1-888-275-6636)

IF A SEAL IS PRESENT ON THIS SHEET IT HAS BEEN ELECTRONICALLY SEALED AND DATED.

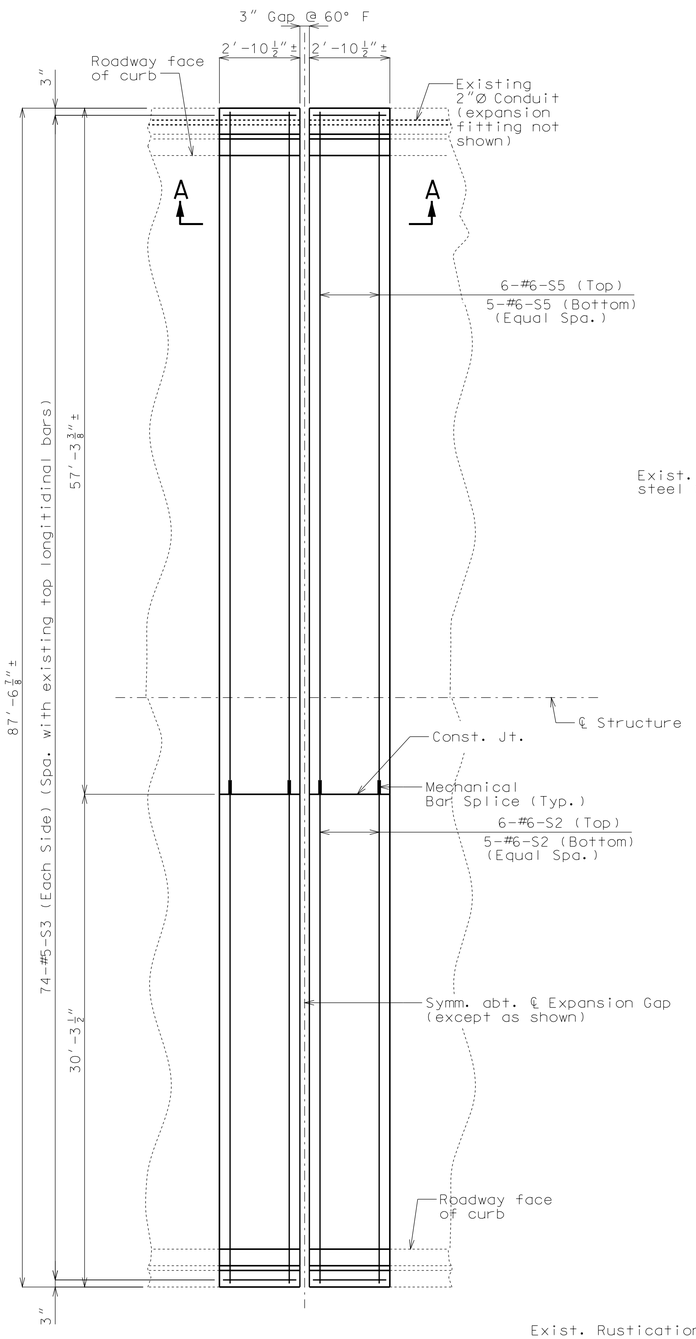

PART PLAN OF SLAB AT EXPANSION JOINT NO. 8
NEAR INT. BENT NO. 26
SHOWING REINFORCEMENT

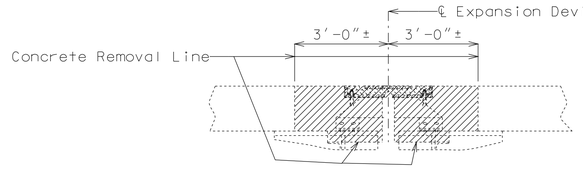

PART SECTION THRU
EXPANSION DEVICE @ JOINT NO. 8
NEAR INT. BENT NO. 26
SHOWING REMOVAL

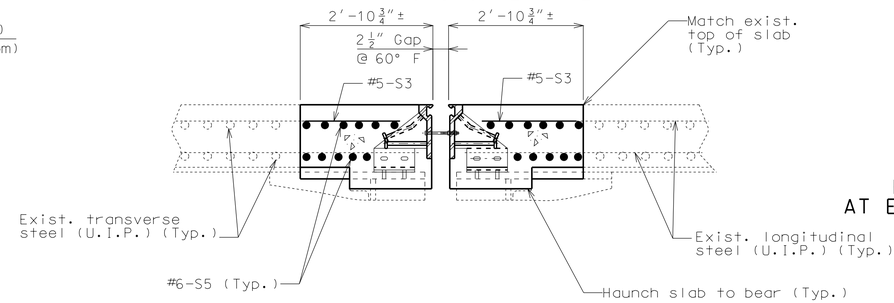

SECTION A-A
Note: Strip deal gland not shown for clarity.

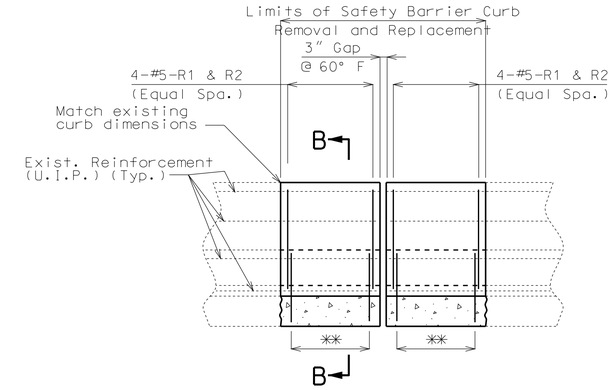

** 4-#5-R3 & R4 spaced with #5-R1 & R2

PART ELEVATION SHOWING
RIGHT SAFETY BARRIER CURB REINFORCEMENT
AT EXPANSION JOINT NO. 8 NEAR INT. BENT NO. 26

Note: Expansion device not shown for clarity.

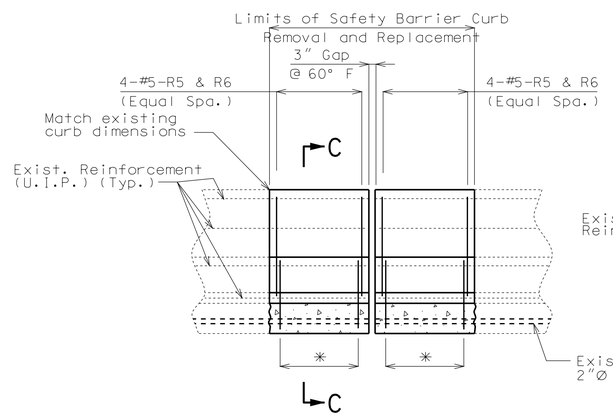

* 4-#5-R7 & R8 spaced with #5-R5 & R6

PART ELEVATION SHOWING
LEFT SAFETY BARRIER CURB REINFORCEMENT
AT EXPANSION JOINT NO. 8 NEAR INT. BENT NO. 26

Note: Expansion device not shown for clarity.

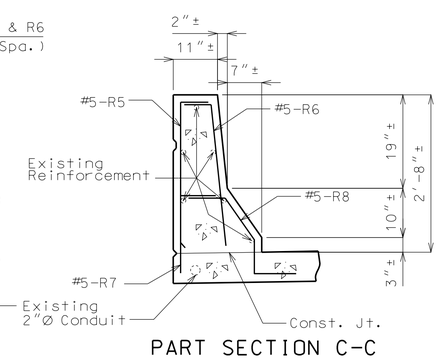

PART SECTION C-C

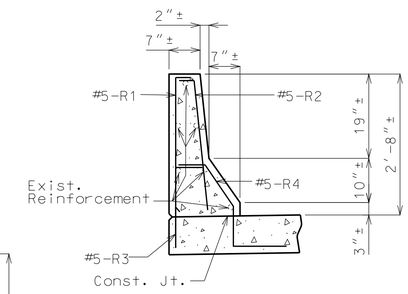

PART SECTION B-B

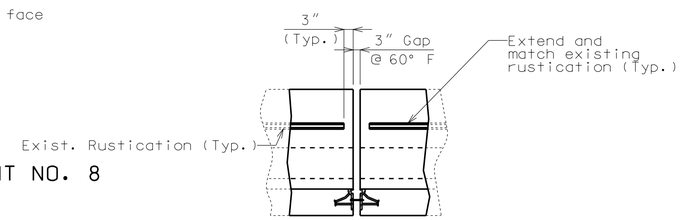

PART ELEVATION SHOWING PARTIAL
SAFETY BARRIER CURB REPLACEMENT

Note: Strip seal gland not shown for clarity.

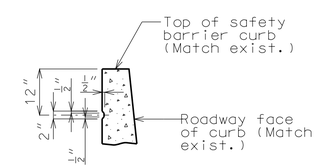

PART SECTION SHOWING
RUSTICATION DETAILS

Notes:

All exposed edges of new barrier curb shall match existing barrier curb.

Payment for concrete curb removal and all new concrete and reinforcement for barrier curb, complete-in-place, will be considered completely covered by the contract unit price for Remove and Replace Barrier Curb per linear foot.

Shift S-bars where necessary to clear the expansion device.

The contractor shall use a mechanical bar splice for #6-S2 & #6-S5 bars at the specified location. The total bar lengths for bars indicated in the bill of reinforcing steel are determined based on the end of the bars being located flush to the face of the construction joint. No additional payment will be made for any additional bar lengths required for the mechanical bar splices. Mechanical bar splices shall be in accordance with Sec 706 except that no measurement will be made for mechanical bar splice and will be considered completely covered by the contract unit price for Reinforcing Steel (Epoxy Coated).

DETAILS OF SLAB AND BARRIER CURB AT EXPANSION JOINT 8 NEAR INTERMEDIATE BENT NO. 26

Note: This drawing is not to scale. Follow dimensions.

Detailed Dec. 2013
Checked Dec. 2013

"THIS MEDIA SHOULD NOT BE CONSIDERED A CERTIFIED DOCUMENT."

DATE PREPARED	1/13/2014
ROUTE	I-670
STATE	MO
DISTRICT	BR
SHEET NO.	12
COUNTY	JACKSON
JOB NO.	J4P2191
CONTRACT ID.	
PROJECT NO.	
BRIDGE NO.	A31361

DESCRIPTION

DATE

MISSOURI HIGHWAYS AND TRANSPORTATION COMMISSION
105 WEST CAPITOL
JEFFERSON CITY, MO 65102
1-888-ASK-MODOT (1-888-275-6636)

IF A SEAL IS PRESENT ON THIS SHEET IT HAS BEEN ELECTRONICALLY SEALED AND DATED.

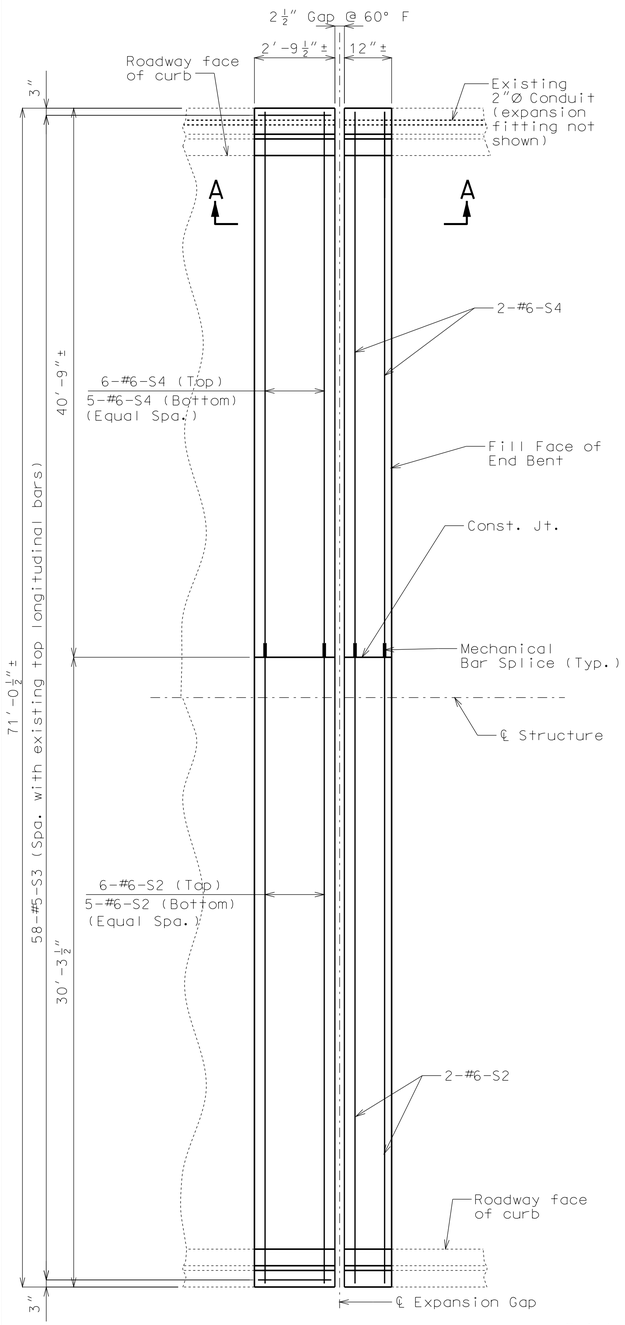

PART PLAN OF SLAB AT EXPANSION JOINT NO. 10
NEAR END BENT NO. 30
SHOWING REINFORCEMENT

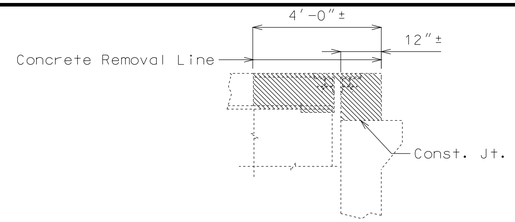

PART SECTION THRU EXPANSION JOINT NO. 10
NEAR END BENT NO. 30
SHOWING REMOVAL

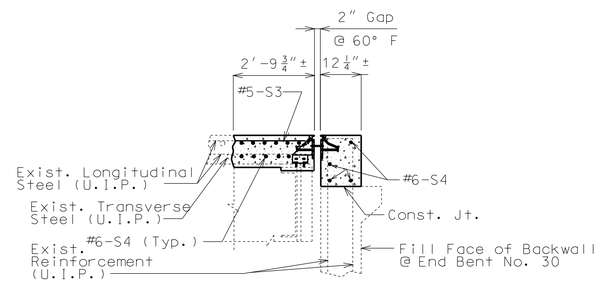

SECTION A-A
Note: Strip seal gland not shown for clarity.

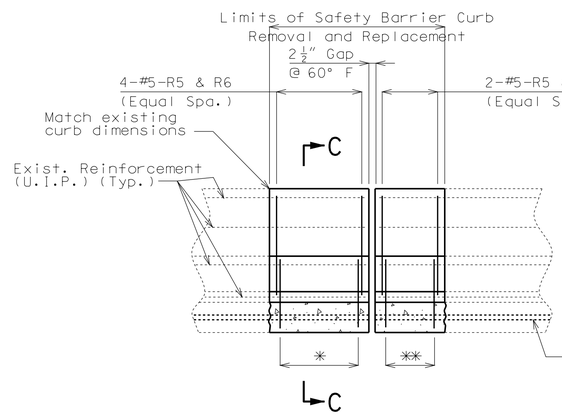

* 4-#5-R7 & R8 spaced with #5-R5 & R6

** 2-#5-R7 & R8 spaced with #5-R5 & R6

PART ELEVATION SHOWING
LEFT SAFETY BARRIER CURB REINFORCEMENT
AT EXPANSION JOINT NO. 10 NEAR END BENT NO. 30

Note: Expansion device not shown for clarity.

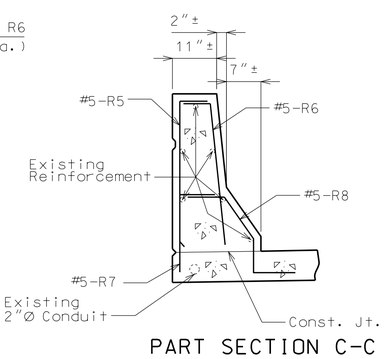

PART SECTION C-C

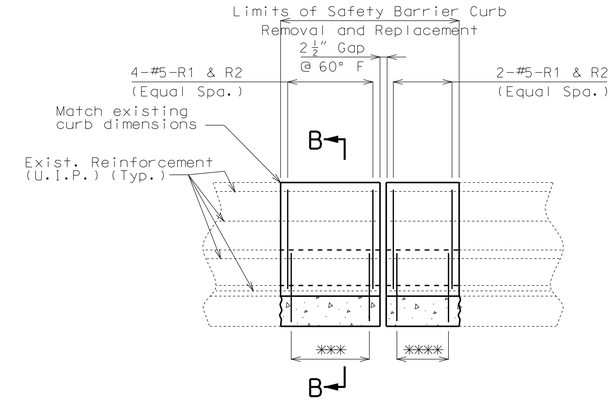

*** 4-#5-R3 & R4 spaced with #5-R1 & R2

**** 2-#5-R3 & R4 spaced with #5-R1 & R2

PART ELEVATION SHOWING
RIGHT SAFETY BARRIER CURB REINFORCEMENT
AT EXPANSION JOINT NO. 10 NEAR END BENT NO. 30

Note: Expansion device not shown for clarity.

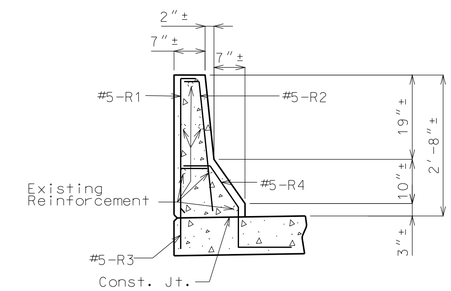

PART SECTION B-B

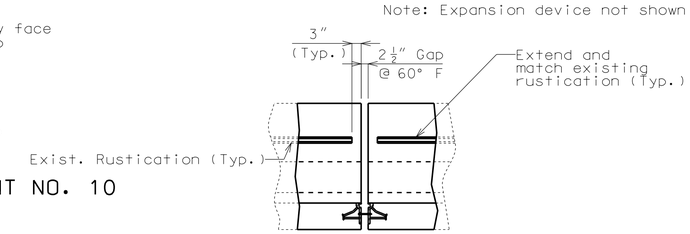

PART ELEVATION SHOWING PARTIAL
SAFETY BARRIER CURB REPLACEMENT

Note: Strip seal gland not shown for clarity.

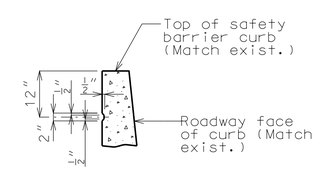

PART SECTION SHOWING
RUSTICATION DETAILS

Notes:

All exposed edges of new barrier curb shall match existing barrier curb.

Payment for concrete curb removal and all new concrete and reinforcement for barrier curb, complete-in-place, will be considered completely covered by the contract unit price for Remove and Replace Barrier Curb per linear foot.

Shift S-bars where necessary to clear the expansion device.

The contractor shall use a mechanical bar splice for #6-S2 & #6-S4 bars at the specified location. The total bar lengths for bars indicated in the bill of reinforcing steel are determined based on the end of the bars being located flush to the face of the construction joint. No additional payment will be made for any additional bar lengths required for the mechanical bar splices. Mechanical bar splices shall be in accordance with Sec 706 except that no measurement will be made for mechanical bar splice and will be considered completely covered by the contract unit price for Reinforcing Steel (Epoxy Coated).

DETAILS OF SLAB AND BARRIER CURB AT EXPANSION JOINT 10 NEAR END BENT NO. 30

Note: This drawing is not to scale. Follow dimensions.

Detailed Dec. 2013
Checked Dec. 2013

"THIS MEDIA SHOULD NOT BE CONSIDERED A CERTIFIED DOCUMENT."

DATE PREPARED	
1/13/2014	
ROUTE	STATE
I-670	MO
DISTRICT	SHEET NO.
BR	13
COUNTY	
JACKSON	
JOB NO.	
J4P2191	
CONTRACT ID.	
PROJECT NO.	
BRIDGE NO.	
A31361	

DESCRIPTION

DATE

MISSOURI HIGHWAYS AND TRANSPORTATION COMMISSION
105 WEST CAPITOL
JEFFERSON CITY, MO 65102
1-888-ASK-MODOT (1-888-275-6636)

IF A SEAL IS PRESENT ON THIS SHEET IT HAS BEEN ELECTRONICALLY SEALED AND DATED.

BILL OF REINFORCING STEEL

NO. REQ'D.	MARK NO. SIZE	MARK NO. MARK	LOCATION	EPOXY (E)	SHAPE NO.	STIRRUP (S)	SUBSTR. (X)	VARIES (V)	NO. EACH	B FT. IN.	C FT. IN.	D FT. IN.	E FT. IN.	F FT. IN.	H FT. IN.	K FT. IN.	NOMINAL LENGTH FT. IN.	ACTUAL LENGTH FT. IN.	WEIGHT LBS.
			SLAB																
22	6	S1	SLAB	E	20					28 7.000							28 7	28 7	945
59	6	S2	SLAB	E	20					30 2.000							30 2	30 2	2673
590	5	S3	SLAB	E	20					2 7.000							2 7	2 7	1590
17	6	S4	SLAB	E	20					40 7.000							40 7	40 7	1036
22	6	S5	SLAB	E	20					57 1.000							57 1	57 1	1886
192	5	S6	SLAB	E	20					3 7.000							3 7	3 7	718
			BARRIER CURB																
66	5	R1	BARRIER CURB	E	19	S				2 6.000	3.500						2 10	2 8	184
66	5	R2	BARRIER CURB	E	15	S				2 6.125	3.500				2 6.000	3.000	2 10	2 9	189
66	5	R3	BARRIER CURB	E	19	S				17.000	6.000						0 23	0 22	126
66	5	R4	BARRIER CURB	E	27	S					6.000	11.125	7.000	12.000	9.125	6.375	3 0	2 10	195
66	5	R5	BARRIER CURB	E	19	S				2 6.000	7.500						3 2	3 0	207
66	5	R6	BARRIER CURB	E	15	S				2 6.125	7.500				2 6.000	3.000	3 2	3 1	212
66	5	R7	BARRIER CURB	E	19	S				17.000	10.000						2 3	2 2	149
66	5	R8	BARRIER CURB	E	27	S					10.000	11.125	7.000	12.000	9.125	6.375	3 4	3 2	218
			TOTALS																
	5			E															3788
	6			E															6540
			TOTAL																0
			TOTAL	E															10328
			Slab on Girder																
	5			E															2308
	6			E															6540
			TOTAL																8848
			Safety Barrier Curb																
	5			E															1480
			TOTAL																1480

BILL OF REINFORCING STEEL

NO. REQ'D.	MARK NO. SIZE	MARK NO. MARK	LOCATION	EPOXY (E)	SHAPE NO.	STIRRUP (S)	SUBSTR. (X)	VARIES (V)	NO. EACH	B FT. IN.	C FT. IN.	D FT. IN.	E FT. IN.	F FT. IN.	H FT. IN.	K FT. IN.	NOMINAL LENGTH FT. IN.	ACTUAL LENGTH FT. IN.	WEIGHT LBS.

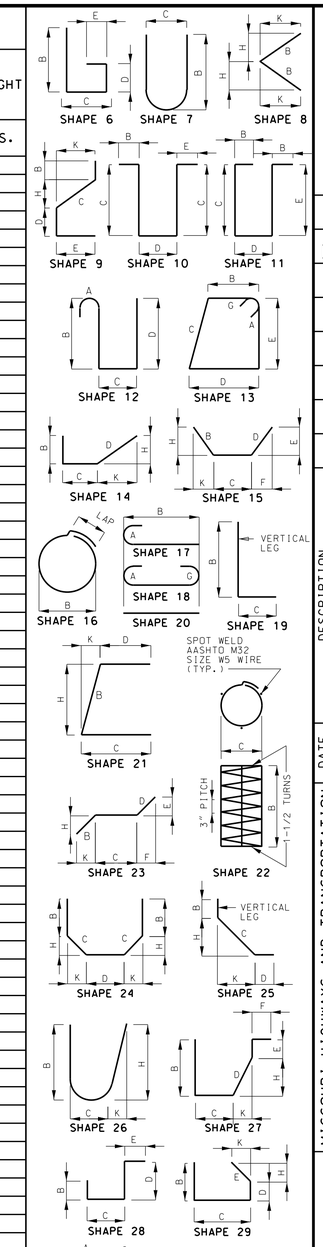

BENDING DIAGRAMS

"THIS MEDIA SHOULD NOT BE CONSIDERED A CERTIFIED DOCUMENT."

DATE PREPARED 1/13/2014

ROUTE	STATE
I-670	MO
DISTRICT	SHEET NO.
BR	14

COUNTY: JACKSON

JOB NO.: J4P2191

CONTRACT ID.

PROJECT NO.

BRIDGE NO.: A31361

DATE	DESCRIPTION

MISSOURI HIGHWAYS AND TRANSPORTATION COMMISSION

105 WEST CAPITOL
JEFFERSON CITY, MO 65102
1-888-ASK-MODOT (1-888-275-6636)

IF A SEAL IS PRESENT ON THIS SHEET IT HAS BEEN ELECTRONICALLY SEALED AND DATED.

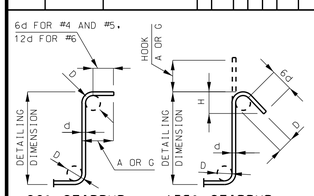

STIRRUP HOOK DIMENSIONS				
GRADES 40 - 50 - 60 KSI				
BAR SIZE	D (IN.)	90° HOOK	135° HOOK	
		HOOK A OR G	HOOK A OR G	APPROX. H
#4	2"	4 1/2"	4 1/2"	3"
#5	2 1/2"	6"	5 1/2"	3 3/4"
#6	4 1/2"	12"	8"	4 1/2"

NOTE: UNLESS OTHERWISE NOTED DIAMETER "D" IS THE SAME FOR ALL BENDS AND HOOKS ON A BAR.

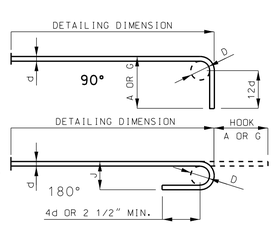

END HOOK DIMENSIONS				
BAR SIZE	D (IN.)	ALL GRADES		
		180° HOOKS		90° HOOKS
		A OR G	J	A OR G
#3	2 1/4"	5"	3"	6"
#4	3"	6"	4"	8"
#5	3 3/4"	7"	5"	10"
#6	4 1/2"	8"	6"	12"
#7	5 1/4"	10"	7"	14"
#8	6"	11"	8"	16"
#9	9 1/2"	15"	11 3/4"	19"
#10	10 3/4"	17"	13 1/4"	22"
#11	12"	19"	14 3/4"	2'-0"
#14	18 1/4"	2'-3"	21 3/4"	2'-7"

TWO ADDITIONAL #6-S4 ARE INCLUDED IN THE BAR BILL FOR TESTING.

NOTE:
ALL STANDARD HOOKS AND BENDS OTHER THAN 180 DEGREE ARE TO BE BENT WITH SAME PROCEDURE AS FOR 90 DEGREE STANDARD HOOKS.
HOOKS AND BENDS SHALL BE IN ACCORDANCE WITH THE PROCEDURES AS SHOWN ON THIS SHEET.
E = EPOXY COATED REINFORCEMENT.
S = STIRRUP.
X = BAR IS INCLUDED IN SUBSTRUCTURE QUANTITIES.
V = BAR DIMENSIONS VARY IN EQUAL INCREMENTS BETWEEN DIMENSIONS SHOWN ON THIS LINE AND THE FOLLOWING LINE.
NO. EA. = NUMBER OF BARS OF EACH LENGTH.
NOMINAL LENGTHS ARE BASED ON OUT TO OUT DIMENSIONS SHOWN IN BENDING DIAGRAMS AND ARE LISTED FOR FABRICATORS USE. (NEAREST INCH)
ACTUAL LENGTHS ARE MEASURED ALONG CENTERLINE BAR TO THE NEAREST INCH.
PAYWEIGHTS ARE BASED ON ACTUAL LENGTHS.
FOUR ANGLE OR CHANNEL SPACERS ARE REQUIRED FOR EACH COLUMN SPIRAL. SPACERS ARE TO BE PLACED ON INSIDE OF SPIRALS. LENGTH AND WEIGHT OF COLUMN SPIRALS DO NOT INCLUDE SPLICES OR SPACERS.
REINFORCING STEEL (GRADE 60) FY = 60,000 PSI.

Detailed Dec. 2013
Checked Dec. 2013

Note: This drawing is not to scale. Follow dimensions.

MISSOURI HIGHWAYS AND TRANSPORTATION COMMISSION

SEC/SUR 6 TWP 49N RGE 33W

U.I.P. AND REHABILITATE EXISTING (68.86'-90'-90'-69')(4'-64'-91'-91'-60')(4'-93'-4')(72'-93'-72')(4'-71'-91'-91'-71'-4')
(70'-91'-91'-70')(6.15'-100'-136'-135'-102')(5.97'-122'-146')(9.41'-260'-260'-10')(140'-140') CONTINUOUS COMPOSITE PLATE GIRDER SPANS

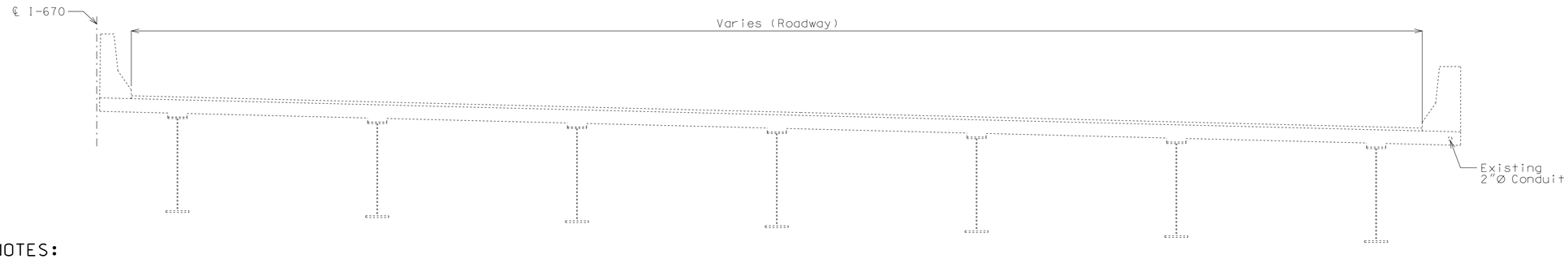

GENERAL NOTES:

Design Specifications:

2002 - AASHTO LFD (17th Edition) Standard Specifications
Bridge Deck Rating = 7

Design Loading:

HS20-44 (1979 & New Construction)
Military 24,000# Tandem Axle

Design Unit Stresses:

Class B-1 Concrete (Slab & Safety Barrier Curb) f'c = 4,000 psi

Reinforcing Steel (Grade 60) fy = 60,000 psi

Reinforcing Steel:

Minimum clearance to reinforcing steel shall be 1½", unless otherwise shown.

Expansion joints:

The concrete for slab and barrier curb replacement shall be Class B-1.

Payment for backwall and slab concrete, complete-in-place, for expansion joint replacement will be considered completely covered by the contract unit price for Class B-1 concrete per cu. yard.

Payment for furnishing and installing slab and backwall reinforcing steel, complete-in-place, for expansion joint replacement will be considered completely covered by the contract unit price for Reinforcing Steel (Epoxy Coated).

Concrete Protective Coatings:

Protective coating for concrete bents and piers (Epoxy & Urethane) shall be applied as shown on the bridge plans and in accordance with Sec 711.

Structural Steel Protective Coatings:

Protective Coating: System G in accordance with Sec 1081.

Protective Coating Limits: Surfaces of all existing structural steel located within 10 feet each side of ℄ joint @ Expansion Joint No. 3 (near Bent No. 9) shall be recoated. Within this limit, items to be recoated shall include all surfaces of girders, diaphragms, stiffeners, bearings, and miscellaneous structural steel.

Surface Preparation: Surface preparation of the existing steel shall be in accordance with Sec 1081 for Recoating of Structural Steel (System G, H or I). The cost of surface preparation will be considered completely covered by the contract unit price per sq. foot for Surface Preparation for Recoating Structural Steel.

Prime Coat: The cost of the prime coat will be considered completely covered by the contract unit price per sq. foot for Field Application of Inorganic Zinc Primer. Tint of the prime coat for System G shall be similar to the color of the field coat to be used.

Field Coat: The color of the finish field coat shall be Gray (Federal Standard #26373). The cost of the intermediate field coat will be considered completely covered by the contract unit price per sq. foot for Intermediate Field Coat (System G). The cost of the finish field coat will be considered completely covered by the contract unit price per sq. foot for Finish Field Coat (System G).

Sec 1081.4.5 shall be modified such that the word "RECOATED" is replaced by the words "RECOATED - SYSTEM G - EXPANSION JOINT NO. 3 AREA ONLY" as part of the new legend.

SECTION THRU SLAB

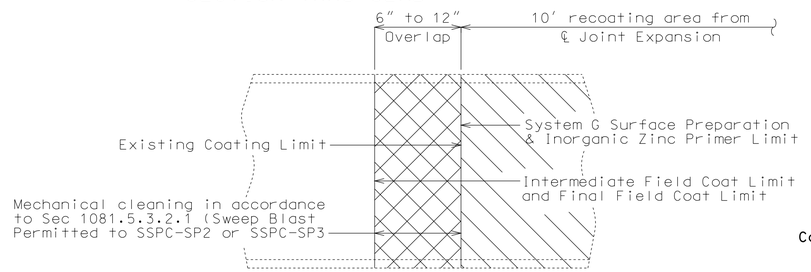

PART ELEVATION SHOWING LIMITS OF PAINT OVERLAP

(Vertical or horizontal paint limit. Horizontal limit shown)

Note:

Limits of Paint Overlap: System G shall overlap the existing coating between 6 inches and 12 inches in order to achieve maximum coverage at the paint limit of each complete system. The final field coating shall be masked to provide crisp, straight lines and to prevent overspray beyond the overlap required.

Miscellaneous:

Bars bonded in old concrete not removed shall be cleanly stripped and embedded into new concrete where possible. If length is available, old bars shall extend into new concrete at least 40 diameters for smooth bars and 30 diameters for deformed bars, unless otherwise noted.

Outline of old work is indicated by light dashed lines. Heavy lines indicate new work.

Contractor shall verify all dimensions in field before ordering new material.

The area exposed by the removal of concrete and not covered with new concrete shall be coated with an approved qualified special mortar in accordance with Sec 704.

Traffic Handling:

See Sheet No. 2 for Details of Stage Construction and Roadway Plans for Traffic Control.

Joint	Exp. Movement
1	5¼"
2	3½"
3	3¾"
4	5"
5	5"
6	5½"
8	6½"
8 RAMP	6½"

Conduit:

Existing conduit that falls within area of slab removal shall be protected from damage.

Any damage to the conduit shall be repaired or replaced, at the contractor's expense, as directed by the engineer.

Conduit shall be reattached in removal areas. Cost of reattaching conduit will be considered completely covered by the contract unit price for Class B-1 Concrete.

Expansion fittings shall be placed as shown and set in accordance with the manufacturer's requirements and based on the air temperature at the time of setting given an estimated total expansion movement as shown above for each open joint using a maximum temperature range of 150° F and a maximum temperature of 120° F.

Estimated Quantities

Item		Total
Removal of Existing Expansion Joints & Adjacent Concrete	linear foot	518
Remove and Replace Barrier Curb	linear foot	100
Class B-1 Concrete	cu. yard	95.8
Substructure Repair (Formed)	sq. foot	400
Reinforcing Steel (Epoxy Coated)	pound	5960
Protective Coating - Concrete Bents & Piers (Urethane)	lump sum	1
Protective Coating - Concrete Bents & Piers (Epoxy)	lump sum	1
Surface Preparation for Recoating Structural Steel	sq. foot	1500
Field Application of Inorganic Zinc Primer	sq. foot	1500
Intermediate Field Coat (System G)	sq. foot	1500
Finish Field Coat (System G)	sq. foot	1500
Strip Seal Expansion Joint System	linear foot	518

REPAIRS TO BRIDGE: RTE. I-670
VIADUCT EBL OVER VARIOUS STREETS
AND BNSF, KCS & KCT RR'S

STATE ROAD FROM STATE LINE TO I-35

IN KANSAS CITY

STA. 52+79.86± (MATCH EXISTING)

STD. 617.20
STD. 706.35

Detailed Dec. 2013
Checked Dec. 2013

Note: This drawing is not to scale. Follow dimensions.

"THIS MEDIA SHOULD NOT BE CONSIDERED A CERTIFIED DOCUMENT."

DATE PREPARED 1/13/2014
ROUTE I-670 STATE MO
DISTRICT BR SHEET NO. 1
COUNTY JACKSON
JOB NO. J4P2191
CONTRACT ID.
PROJECT NO.
BRIDGE NO. A31362

DESCRIPTION | DATE

MISSOURI HIGHWAYS AND TRANSPORTATION COMMISSION
105 WEST CAPITOL
JEFFERSON CITY, MO 65102
1-888-ASK-MODOT (1-888-275-6636)

IF A SEAL IS PRESENT ON THIS SHEET IT HAS BEEN ELECTRONICALLY SEALED AND DATED.

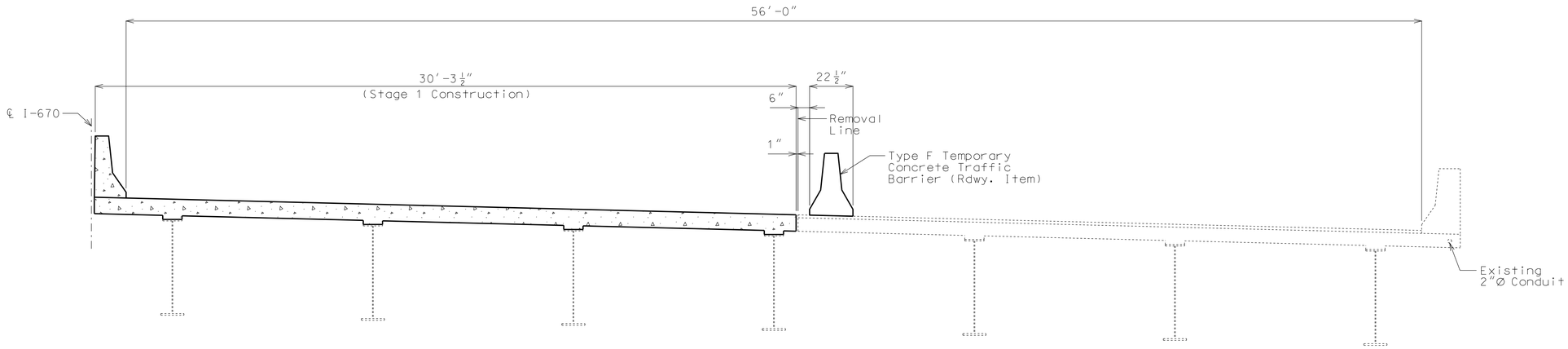

STAGE 1 CONSTRUCTION

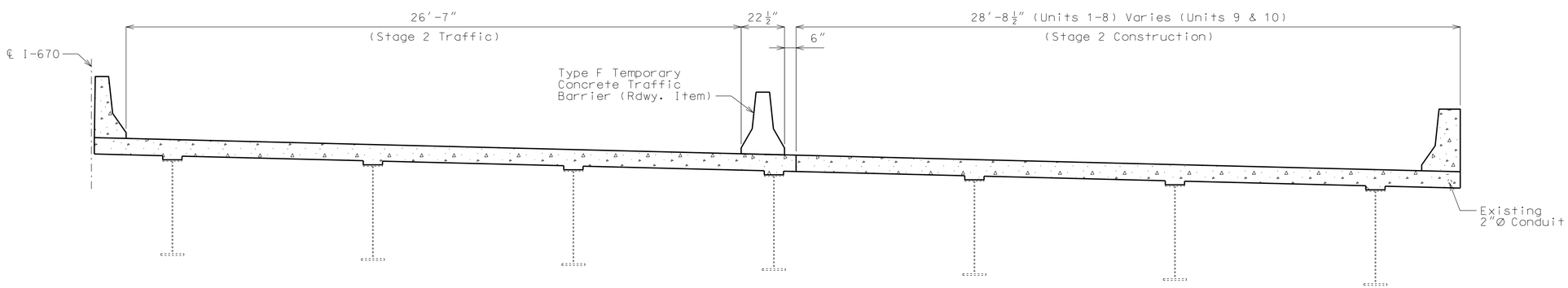

STAGE 2 CONSTRUCTION

Note:

Method of attachment for the Type F Temoprary Barrier shall be the Tie-Down Strap.

DETAILS OF STAGE CONSTRUCTION

Detailed Dec. 2013
Checked Dec. 2013

Note: This drawing is not to scale. Follow dimensions.

"THIS MEDIA SHOULD NOT BE CONSIDERED A CERTIFIED DOCUMENT."

DATE PREPARED	1/13/2014
ROUTE	I-670
STATE	MO
DISTRICT	BR
SHEET NO.	2
COUNTY	JACKSON
JOB NO.	J4P2191
CONTRACT ID.	
PROJECT NO.	
BRIDGE NO.	A31362

DATE	DESCRIPTION

MISSOURI HIGHWAYS AND TRANSPORTATION COMMISSION

105 WEST CAPITOL
JEFFERSON CITY, MO 65102
1-888-ASK-MODOT (1-888-275-6636)

IF A SEAL IS PRESENT ON THIS SHEET IT HAS BEEN ELECTRONICALLY SEALED AND DATED.

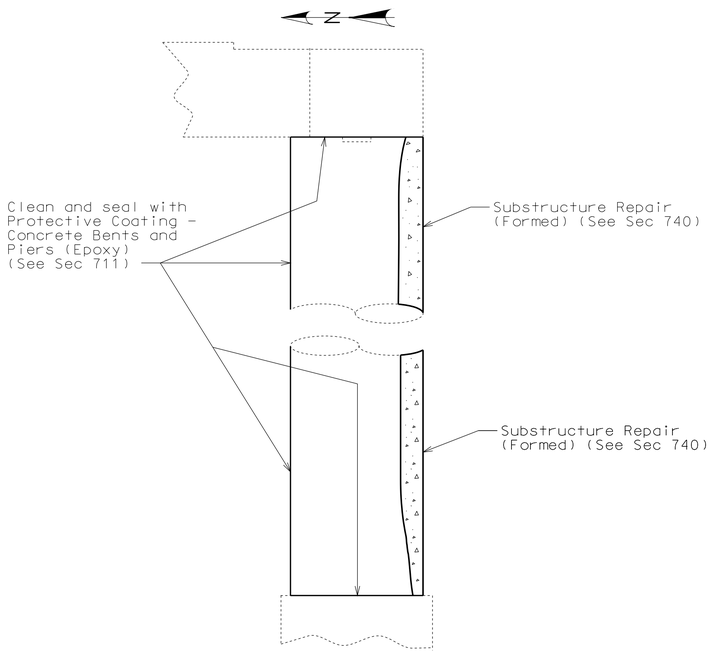

PART ELEVATION OF INTERMEDIATE BENT NO. 28
SHOWING SUBSTRUCTURE REPAIR (FORMED)
AND PROTECTIVE COATING ON SOUTH COLUMN

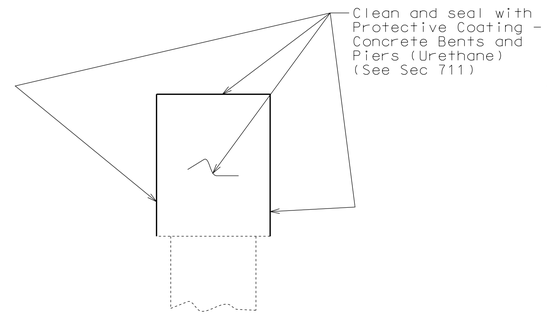

PART END ELEVATION OF
INTERMEDIATE BENT NO. 4
SHOWING PROTECTIVE COATING

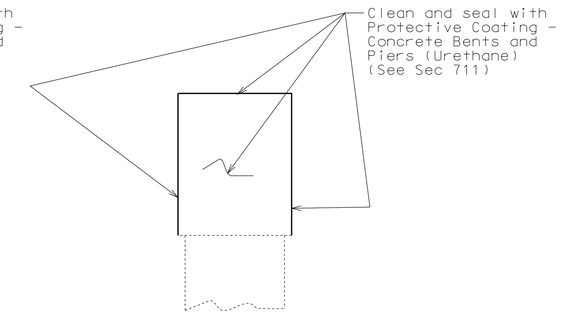

PART END ELEVATION OF
INTERMEDIATE BENTS NO. 8, 9, 12 & 16
SHOWING PROTECTIVE COATING

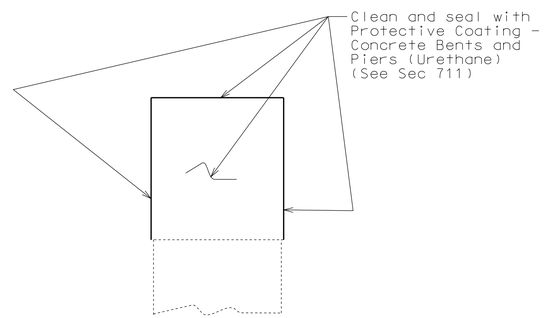

PART END ELEVATION OF
INTERMEDIATE BENT NO. 20
SHOWING PROTECTIVE COATING

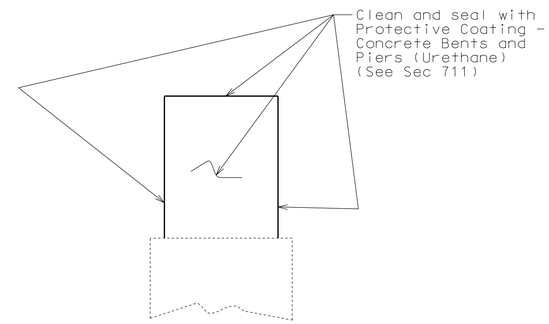

PART END ELEVATION OF
INTERMEDIATE BENTS NO. 24, 26 & 26 RAMP
SHOWING PROTECTIVE COATING

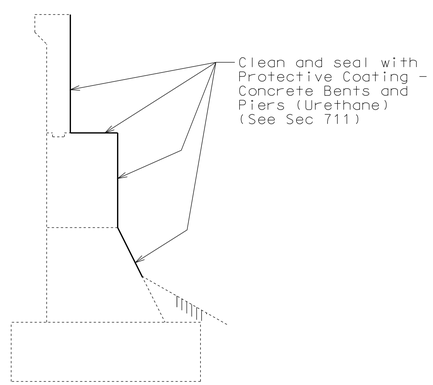

TYPICAL SECTION THRU
END BENT NO. 30 SHOWING
PROTECTIVE COATING

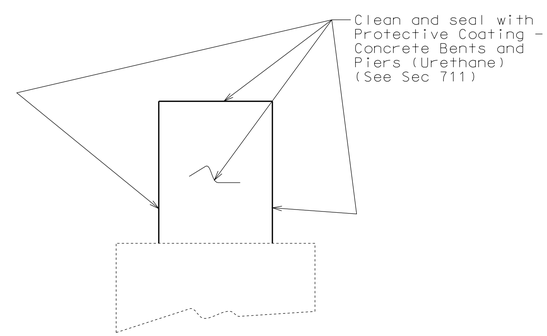

PART END ELEVATION OF
INTERMEDIATE BENT NO. 28
SHOWING PROTECTIVE COATING

Detailed Dec. 2013
Checked Dec. 2013

Note: This drawing is not to scale. Follow dimensions.

"THIS MEDIA SHOULD NOT BE CONSIDERED A CERTIFIED DOCUMENT."

DATE PREPARED	1/13/2014
ROUTE	I-670
STATE	MO
DISTRICT	BR
SHEET NO.	3
COUNTY	JACKSON
JOB NO.	J4P2191
CONTRACT ID.	
PROJECT NO.	
BRIDGE NO.	A31362

DATE	DESCRIPTION

MISSOURI HIGHWAYS AND TRANSPORTATION COMMISSION

105 WEST CAPITOL
JEFFERSON CITY, MO 65102
1-888-ASK-MODOT (1-888-275-6636)

IF A SEAL IS PRESENT ON THIS SHEET IT HAS BEEN ELECTRONICALLY SEALED AND DATED.

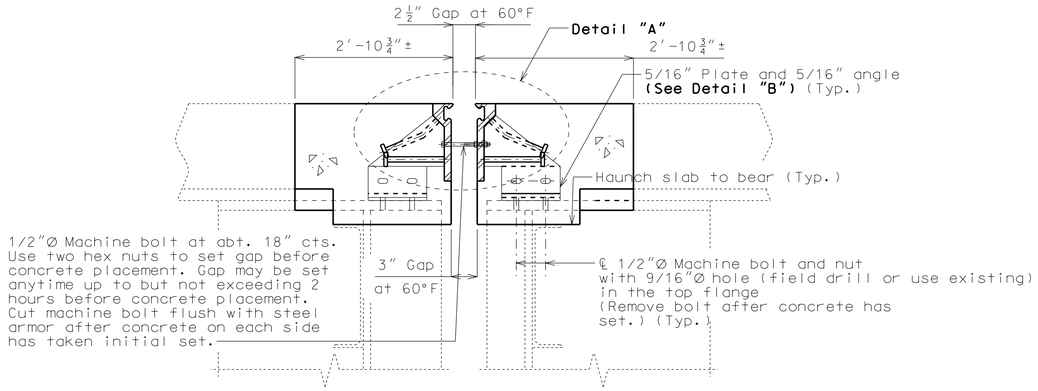

SECTION A-A

Note: Strip seal gland not shown for clarity.

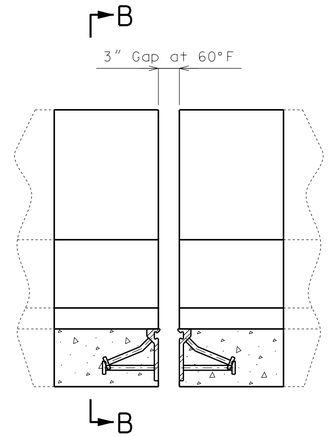

Note: Strip seal gland not shown for clarity.

PART ELEVATION OF BARRIER CURB

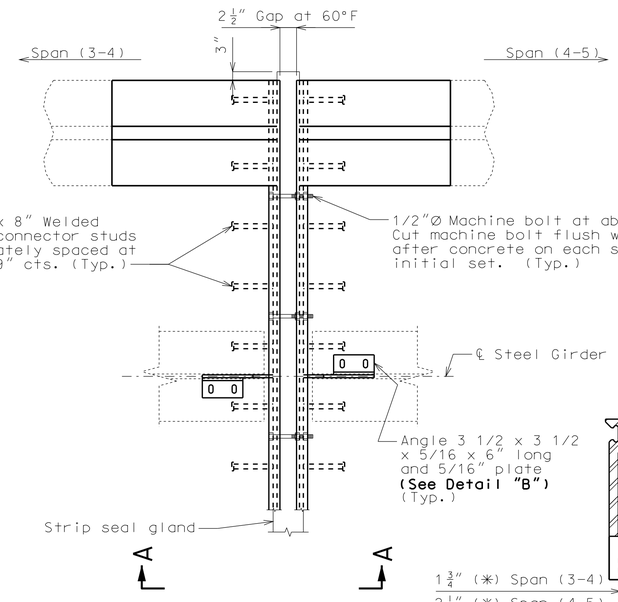

PART PLAN

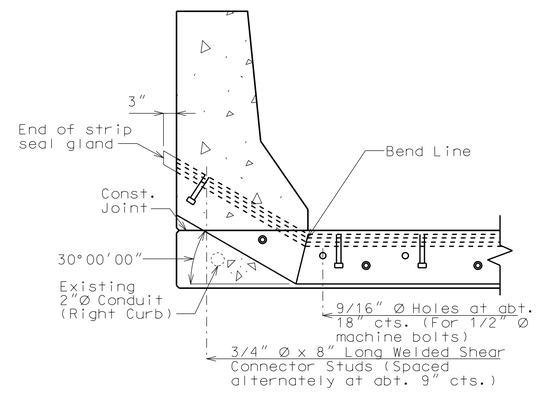

PART SECTION B-B

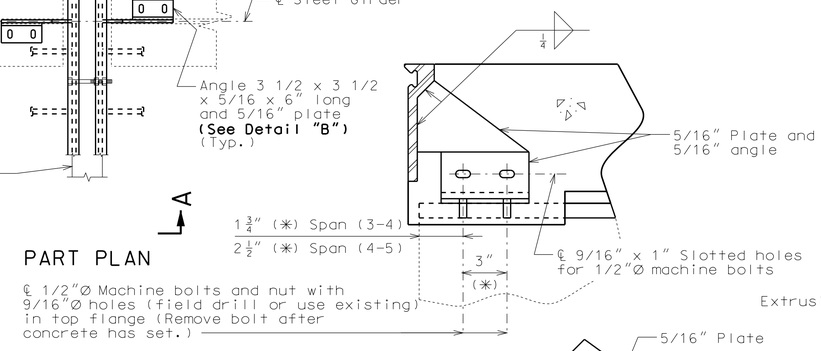

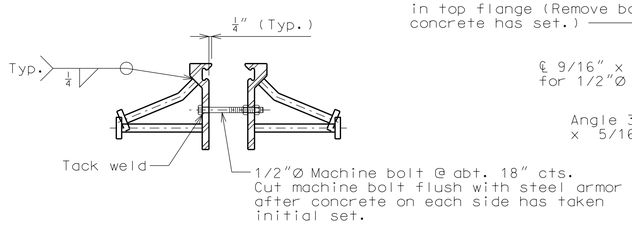

DETAIL "A"

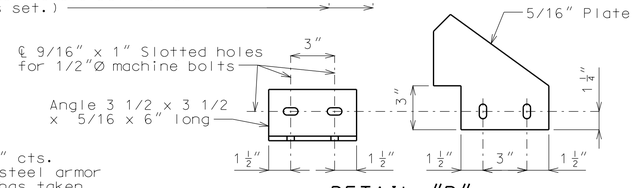

DETAIL "B"

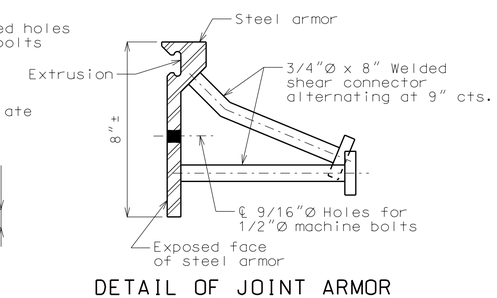

DETAIL OF JOINT ARMOR

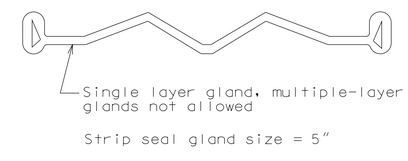

DETAIL OF GLAND

GENERAL NOTES:

Expansion joint system shall be fabricated in one section, except for stage construction and when the length is over 50 feet. A complete joint penetration groove welded splice shall be required. Welds shall be ground flush to provide a smooth surface. The expansion joint system shall be fabricated and installed to the crown and grade of the roadway.

The strip seal gland shall be installed in joints in one continuous piece without field splices. Factory splicing will be permitted for joints in excess of 53 feet.

Structural steel for the expansion joint system shall be ASTM A709 Grade 36 except the steel armor may be ASTM A709 Grade 50W. Anchors for the expansion joint system shall be in accordance with Sec 1037. Strip seal expansion joint system shall be in accordance with Sec 717.

Structural steel for the expansion joint system shall be coated with a minimum of two coats of inorganic zinc primer (5 mils minimum) or galvanized in accordance with ASTM A123. Anchors need not be protected from overspray.

Plan dimensions are based on installation at 60°F. The expansion gap and other dimensions shall be increased or decreased 1/4" for each 10° fall or rise in temperature at installation.

New longitudinal reinforcing steel shall be placed and existing reinforcing steel shall be cut/bent so that ends shall not be more than ±1" from vertical leg of the steel armor at the expansion joint system.

Concrete shall be forced under and around steel armor and anchors. Proper consolidation of the concrete shall be achieved by localized internal vibration.

(*) Match existing.

"THIS MEDIA SHOULD NOT BE CONSIDERED A CERTIFIED DOCUMENT."

DATE PREPARED	
1/13/2014	
ROUTE	STATE
I-670	MO
DISTRICT	SHEET NO.
BR	4
COUNTY	
JACKSON	
JOB NO.	
J4P2191	
CONTRACT ID.	
PROJECT NO.	
BRIDGE NO.	
A31362	

DATE	DESCRIPTION

IF A SEAL IS PRESENT ON THIS SHEET IT HAS BEEN ELECTRONICALLY SEALED AND DATED.

MISSOURI HIGHWAYS AND TRANSPORTATION COMMISSION
105 WEST CAPITOL
JEFFERSON CITY, MO 65102
1-888-ASK-MODOT (1-888-275-6636)

REV.

Detailed Dec. 2013
Checked Dec. 2013

DETAILS OF STRIP SEAL AT EXPANSION JOINT 1 NEAR INTERMEDIATE BENT NO. 4

Note: This drawing is not to scale. Follow dimensions.

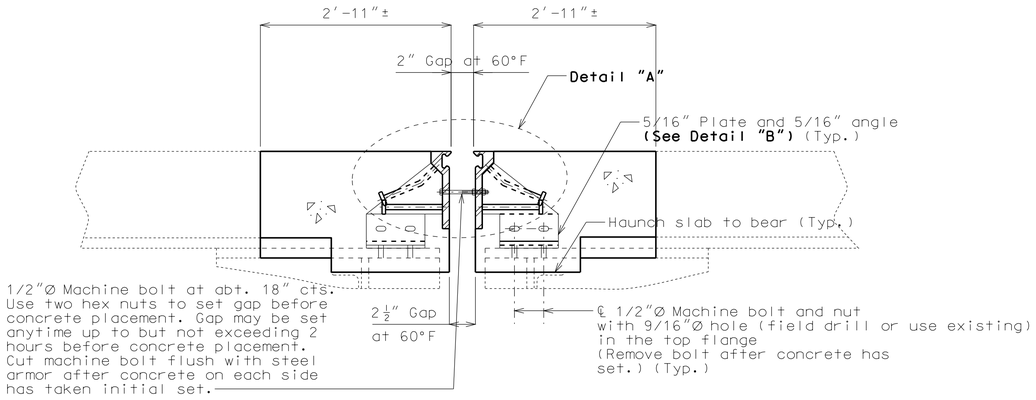

SECTION A-A

Note: Strip seal gland not shown for clarity.

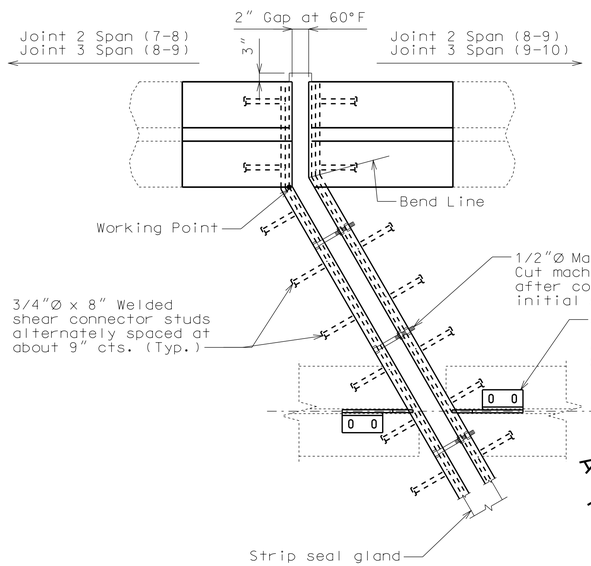

PART PLAN

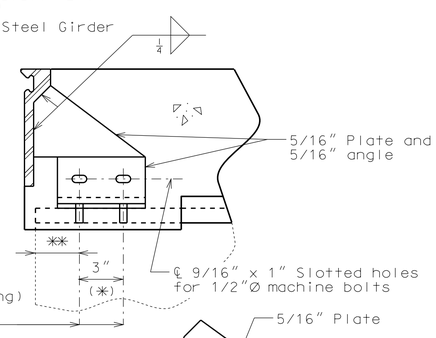

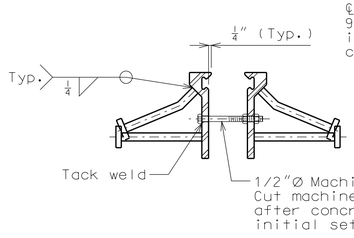

DETAIL "A"

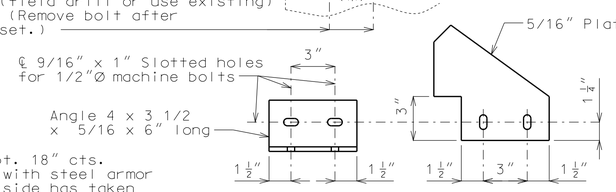

DETAIL "B"

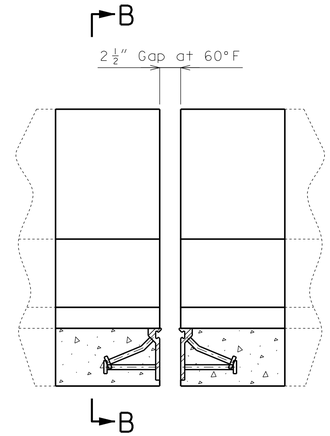

Note: Strip seal gland not shown for clarity.

PART ELEVATION OF BARRIER CURB

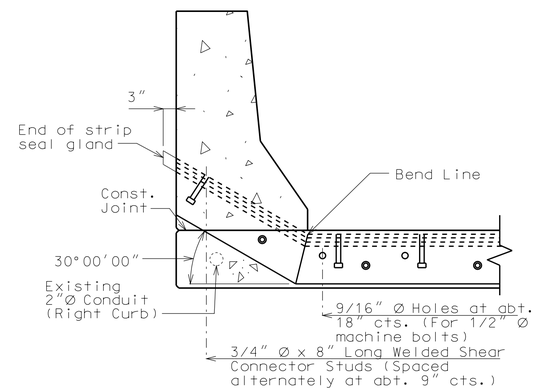

PART SECTION B-B

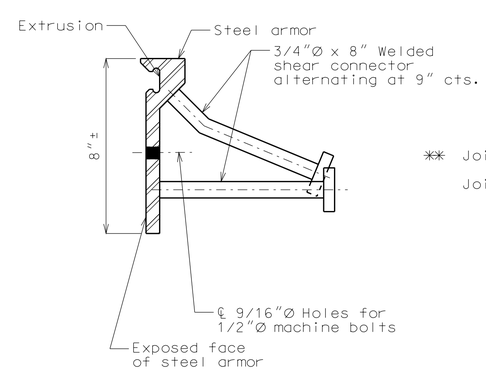

DETAIL OF JOINT ARMOR

** Joint 2 - 1 3/4" (*) Span (7-8), 2 1/2" (*) Span (8-9)

Joint 3 - 2 1/2" (*) Span (8-9), 1 3/4" (*) Span (9-10)

Strip seal gland size = 4"

DETAIL OF GLAND

GENERAL NOTES:

Expansion joint system shall be fabricated in one section, except for stage construction and when the length is over 50 feet. A complete joint penetration groove welded splice shall be required. Welds shall be ground flush to provide a smooth surface. The expansion joint system shall be fabricated and installed to the crown and grade of the roadway.

The strip seal gland shall be installed in joints in one continuous piece without field splices. Factory splicing will be permitted for joints in excess of 53 feet.

Structural steel for the expansion joint system shall be ASTM A709 Grade 36 except the steel armor may be ASTM A709 Grade 50W. Anchors for the expansion joint system shall be in accordance with Sec 1037. Strip seal expansion joint system shall be in accordance with Sec 717.

Structural steel for the expansion joint system shall be coated with a minimum of two coats of inorganic zinc primer (5 mils minimum) or galvanized in accordance with ASTM A123. Anchors need not be protected from overspray.

Plan dimensions are based on installation at 60°F. The expansion gap and other dimensions shall be increased or decreased 3/16" joint 2 & 3 temperature at installation.

New longitudinal reinforcing steel shall be placed and existing longitudinal reinforcing steel shall be cut/bent so that ends shall not be more than ±1" from vertical leg of the steel armor at the expansion joint system.

Concrete shall be forced under and around steel armor and anchors. Proper consolidation of the concrete shall be achieved by localized internal vibration.

(*) Match existing.

DETAILS OF STRIP SEAL AT EXPANSION JOINT 2 NEAR INTERMEDIATE BENT NO. 8 & EXPANSION JOINT 3 NEAR INTERMEDIATE BENT NO. 9

Detailed Dec. 2013
Checked Dec. 2013

Note: This drawing is not to scale. Follow dimensions.

"THIS MEDIA SHOULD NOT BE CONSIDERED A CERTIFIED DOCUMENT."

DATE PREPARED	
1/13/2014	
ROUTE	STATE
I-670	MO
DISTRICT	SHEET NO.
BR	5
COUNTY	
JACKSON	
JOB NO.	
J4P2191	
CONTRACT ID.	
PROJECT NO.	
BRIDGE NO.	
A31362	

DESCRIPTION	DATE

IF A SEAL IS PRESENT ON THIS SHEET IT HAS BEEN ELECTRONICALLY SEALED AND DATED.

MISSOURI HIGHWAYS AND TRANSPORTATION COMMISSION
105 WEST CAPITOL
JEFFERSON CITY, MO 65102
1-888-ASK-MODOT (1-888-275-6636)

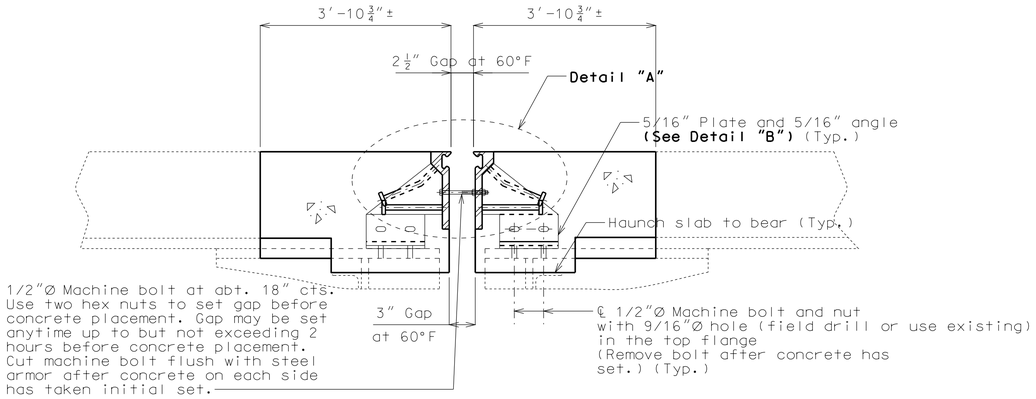

SECTION A-A

Note: Strip seal gland not shown for clarity.

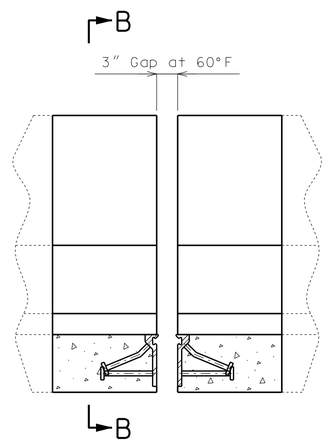

Note: Strip seal gland not shown for clarity.

PART ELEVATION OF BARRIER CURB

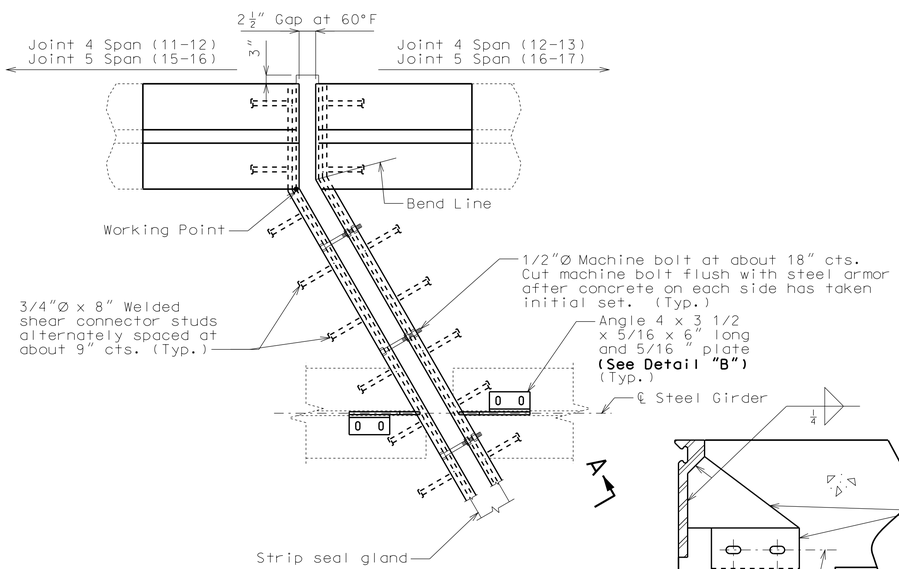

PART PLAN

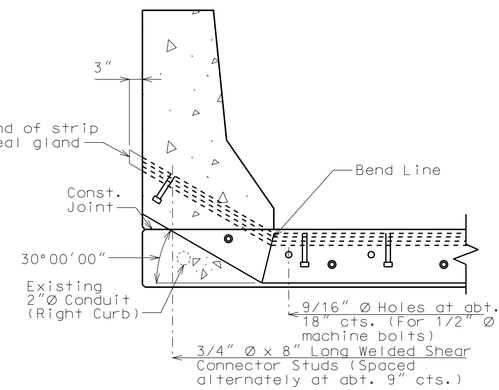

PART SECTION B-B

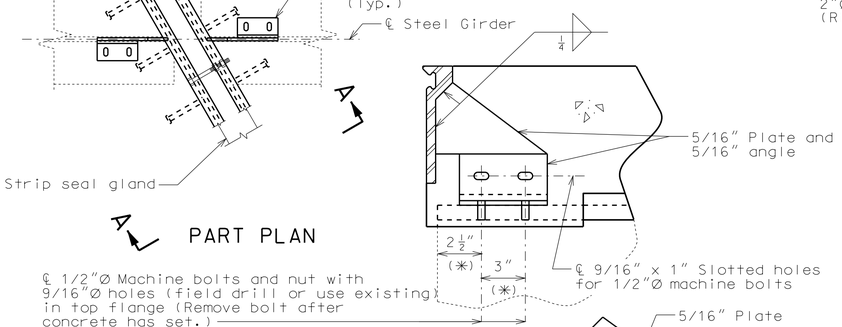

DETAIL "B"

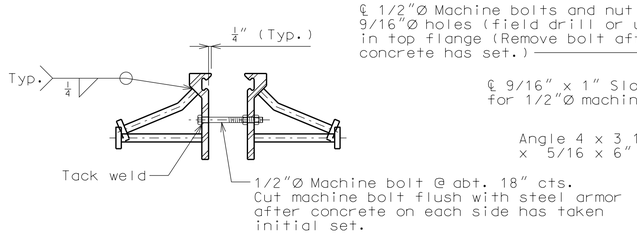

DETAIL "A"

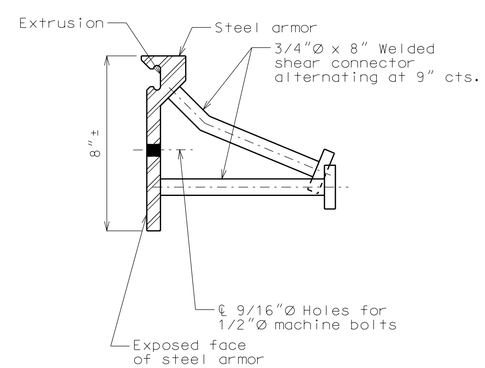

DETAIL OF JOINT ARMOR

Strip seal gland size = 5"

DETAIL OF GLAND

GENERAL NOTES:

Expansion joint system shall be fabricated in one section, except for stage construction and when the length is over 50 feet. A complete joint penetration groove welded splice shall be required. Welds shall be ground flush to provide a smooth surface. The expansion joint system shall be fabricated and installed to the crown and grade of the roadway.

The strip seal gland shall be installed in joints in one continuous piece without field splices. Factory splicing will be permitted for joints in excess of 53 feet.

Structural steel for the expansion joint system shall be ASTM A709 Grade 36 except the steel armor may be ASTM A709 Grade 50W. Anchors for the expansion joint system shall be in accordance with Sec 1037. Strip seal expansion joint system shall be in accordance with Sec 717.

Structural steel for the expansion joint system shall be coated with a minimum of two coats of inorganic zinc primer (5 mils minimum) or galvanized in accordance with ASTM A123. Anchors need not be protected from overspray.

Plan dimensions are based on installation at 60°F. The expansion gap and other dimensions shall be increased or decreased 1/4" for each 10° fall or rise in temperature at installation.

New longitudinal reinforcing steel shall be placed and existing longitudinal reinforcing steel shall be cut/bent so that ends shall not be more than ±1" from vertical leg of the steel armor at the expansion joint system.

Concrete shall be forced under and around steel armor and anchors. Proper consolidation of the concrete shall be achieved by localized internal vibration.

(*) Match existing.

"THIS MEDIA SHOULD NOT BE CONSIDERED A CERTIFIED DOCUMENT."

DATE PREPARED	1/13/2014
ROUTE	I-670
STATE	MO
DISTRICT	BR
SHEET NO.	6
COUNTY	JACKSON
JOB NO.	J4P2191
CONTRACT ID.	
PROJECT NO.	
BRIDGE NO.	A31362

DESCRIPTION

DATE

MISSOURI HIGHWAYS AND TRANSPORTATION COMMISSION

105 WEST CAPITOL
JEFFERSON CITY, MO 65102
1-888-ASK-MODOT (1-888-275-6636)

IF A SEAL IS PRESENT ON THIS SHEET IT HAS BEEN ELECTRONICALLY SEALED AND DATED.

DETAILS OF STRIP SEAL AT EXPANSION JOINTS 4 & 5 NEAR INTERMEDIATE BENTS NO. 12 & 16

Detailed Dec. 2013
Checked Dec. 2013

Note: This drawing is not to scale. Follow dimensions.

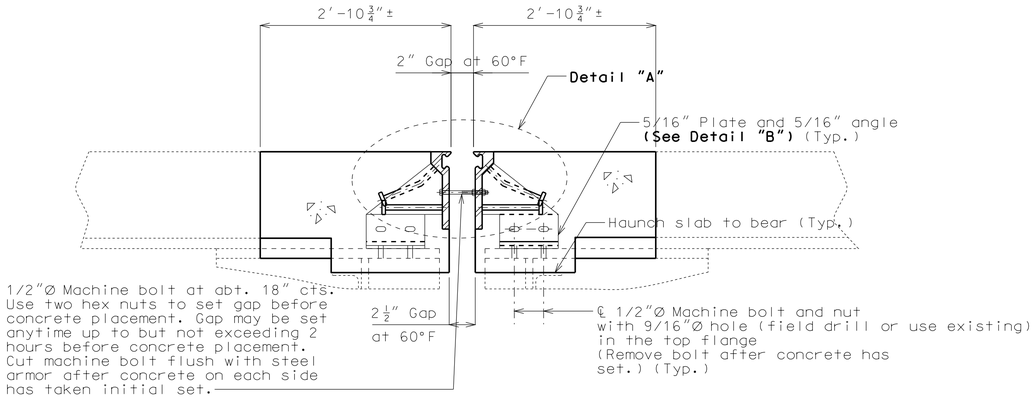

SECTION A-A

Note: Strip seal gland not shown for clarity.

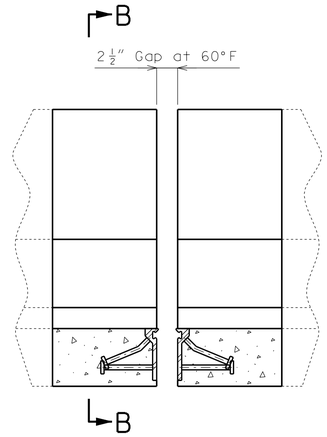

Note: Strip seal gland not shown for clarity.

PART ELEVATION OF BARRIER CURB

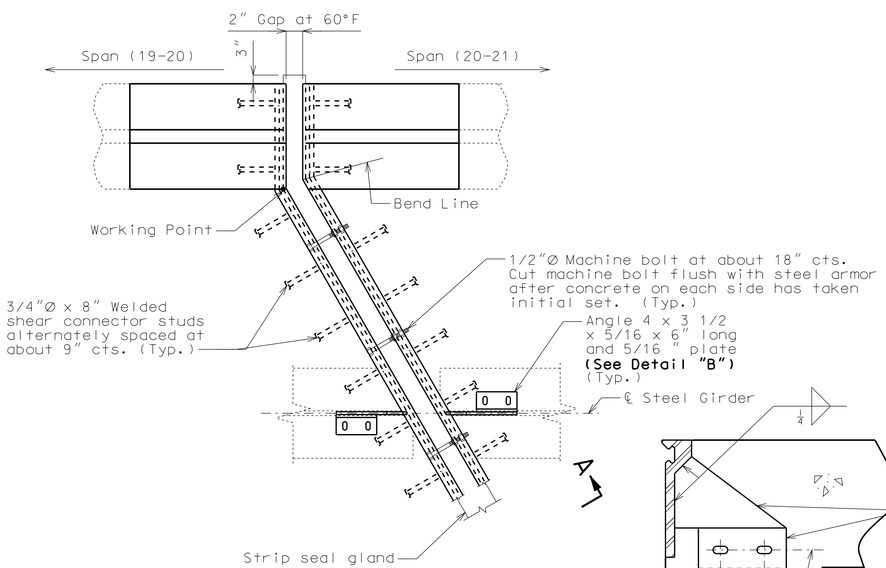

PART PLAN

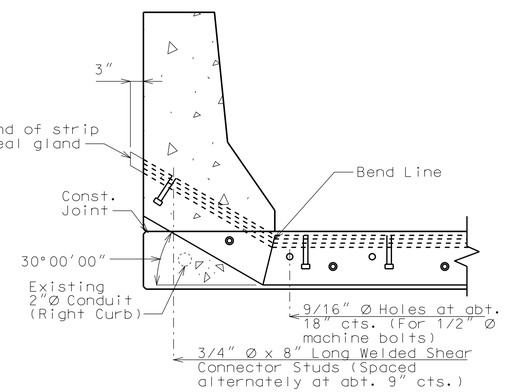

PART SECTION B-B

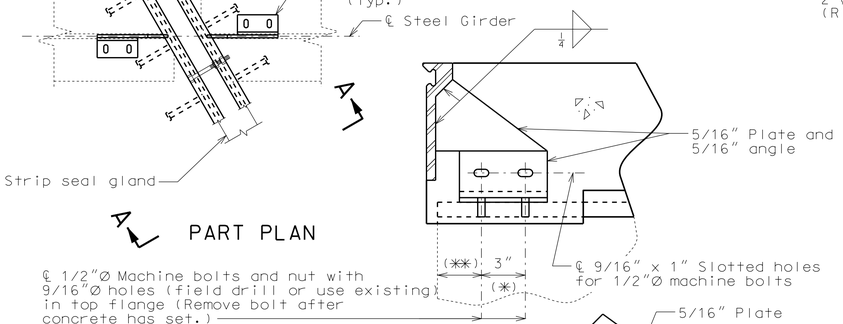

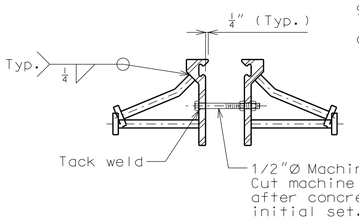

DETAIL "A"

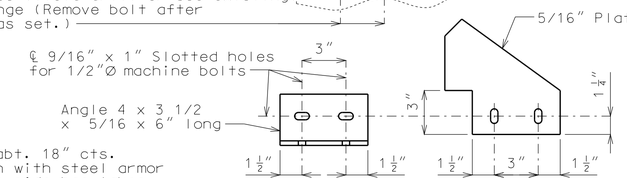

DETAIL "B"

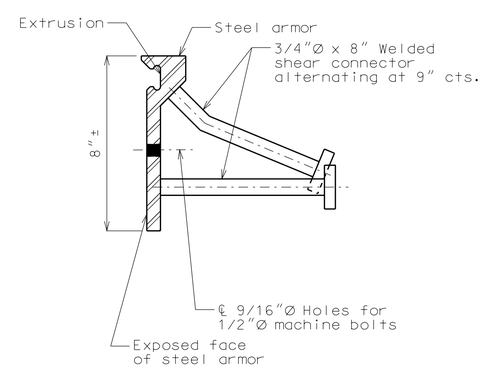

DETAIL OF JOINT ARMOR

GENERAL NOTES:

Expansion joint system shall be fabricated in one section, except for stage construction and when the length is over 50 feet. A complete joint penetration groove welded splice shall be required. Welds shall be ground flush to provide a smooth surface. The expansion joint system shall be fabricated and installed to the crown and grade of the roadway.

The strip seal gland shall be installed in joints in one continuous piece without field splices. Factory splicing will be permitted for joints in excess of 53 feet.

Structural steel for the expansion joint system shall be ASTM A709 Grade 36 except the steel armor may be ASTM A709 Grade 50W. Anchors for the expansion joint system shall be in accordance with Sec 1037. Strip seal expansion joint system shall be in accordance with Sec 717.

Structural steel for the expansion joint system shall be coated with a minimum of two coats of inorganic zinc primer (5 mils minimum) or galvanized in accordance with ASTM A123. Anchors need not be protected from overspray.

Plan dimensions are based on installation at 60°F. The expansion gap and other dimensions shall be increased or decreased 1/4" for each 10° fall or rise in temperature at installation.

New longitudinal reinforcing steel shall be placed and existing longitudinal reinforcing steel shall be cut/bent so that ends shall not be more than ±1" from vertical leg of the steel armor at the expansion joint system.

Concrete shall be forced under and around steel armor and anchors. Proper consolidation of the concrete shall be achieved by localized internal vibration.

(*) Match existing.

** 2" (*) Span (19-20), 2 3/4" (*) Span (20-21)

Strip seal gland size = 4"

DETAIL OF GLAND

DETAILS OF STRIP SEAL AT EXPANSION JOINT 6 NEAR INTERMEDIATE BENT NO. 20

Detailed Dec. 2013
Checked Dec. 2013

Note: This drawing is not to scale. Follow dimensions.

"THIS MEDIA SHOULD NOT BE CONSIDERED A CERTIFIED DOCUMENT."

DATE PREPARED	1/13/2014
ROUTE	I-670
STATE	MO
DISTRICT	BR
SHEET NO.	7
COUNTY	JACKSON
JOB NO.	J4P2191
CONTRACT ID.	
PROJECT NO.	
BRIDGE NO.	A31362

DATE	DESCRIPTION

MISSOURI HIGHWAYS AND TRANSPORTATION COMMISSION
105 WEST CAPITOL
JEFFERSON CITY, MO 65102
1-888-ASK-MODOT (1-888-275-6636)

IF A SEAL IS PRESENT ON THIS SHEET IT HAS BEEN ELECTRONICALLY SEALED AND DATED.

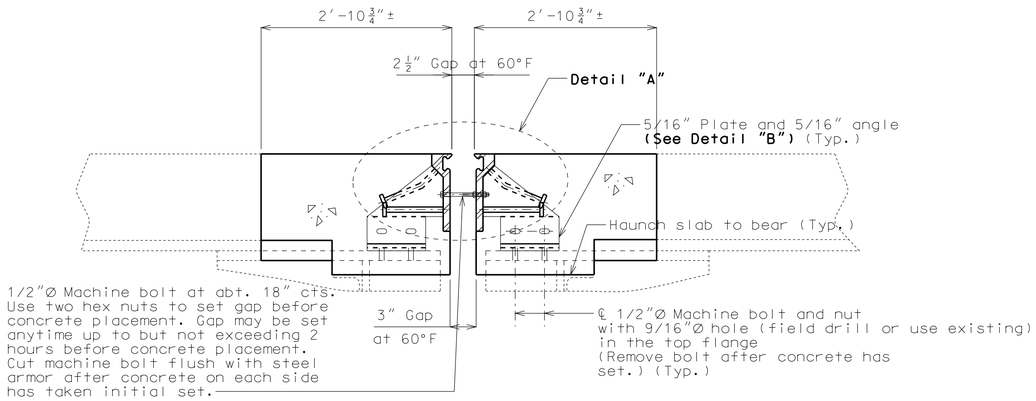

SECTION A-A

Note: Strip seal gland not shown for clarity.

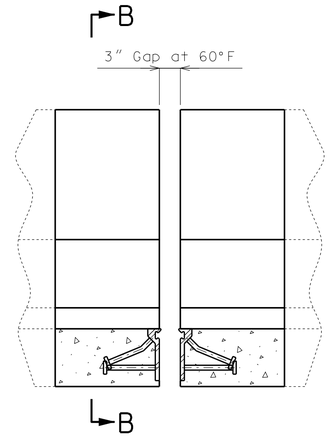

Note: Strip seal gland not shown for clarity.

PART ELEVATION OF BARRIER CURB

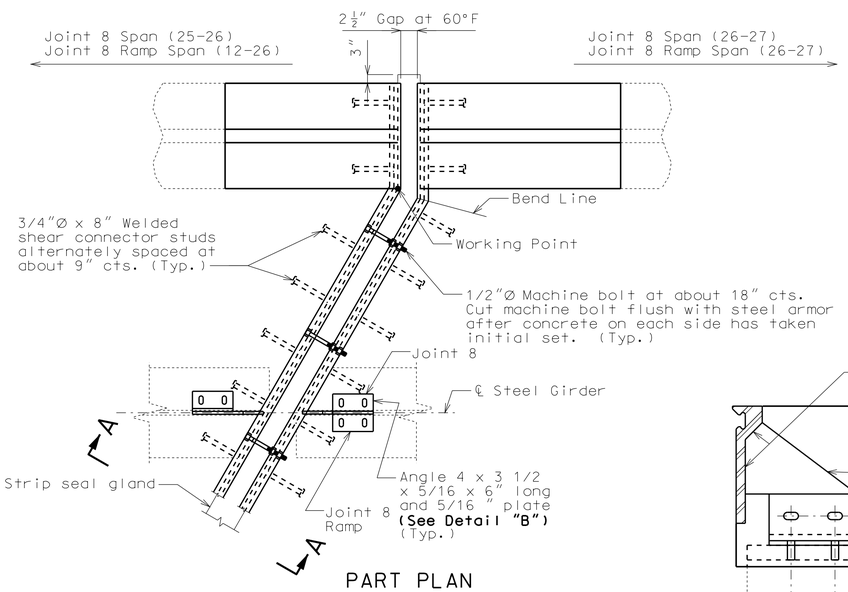

PART PLAN

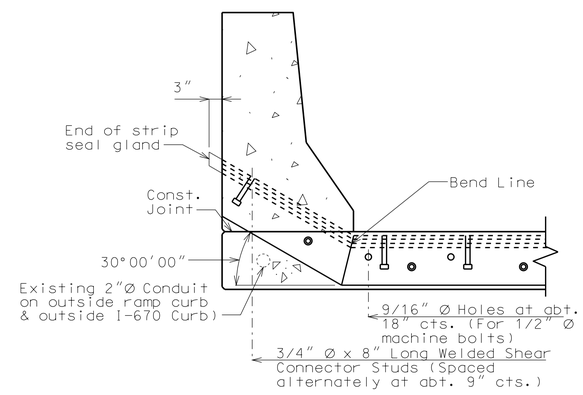

PART SECTION B-B

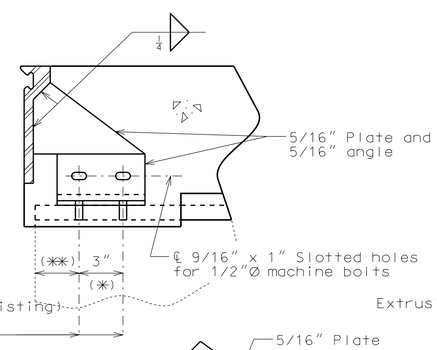

(✱✱) Joint 8 - 8½″ (✱) Span (25-26), 2″ (✱) Span (26-27)
Joint 8 Ramp - 10″ (✱) Span (12-26), 12″ (✱) Span (26-27)

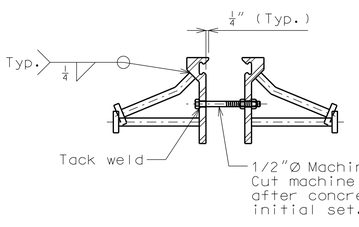

DETAIL "A"

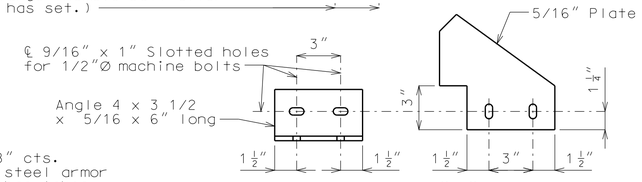

DETAIL "B"

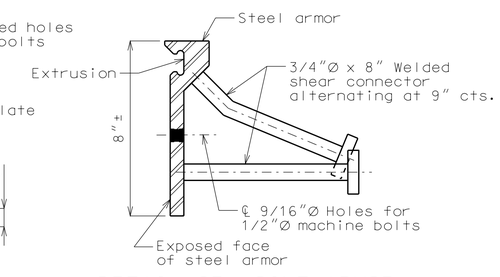

DETAIL OF JOINT ARMOR

DETAIL OF GLAND

GENERAL NOTES:

Expansion joint system shall be fabricated in one section, except for stage construction and when the length is over 50 feet. A complete joint penetration groove welded splice shall be required. Welds shall be ground flush to provide a smooth surface. The expansion joint system shall be fabricated and installed to the crown and grade of the roadway.

The strip seal gland shall be installed in joints in one continuous piece without field splices. Factory splicing will be permitted for joints in excess of 53 feet.

Structural steel for the expansion joint system shall be ASTM A709 Grade 36 except the steel armor may be ASTM A709 Grade 50W. Anchors for the expansion joint system shall be in accordance with Sec 1037. Strip seal expansion joint system shall be in accordance with Sec 717.

Structural steel for the expansion joint system shall be coated with a minimum of two coats of inorganic zinc primer (5 mils minimum) or galvanized in accordance with ASTM A123. Anchors need not be protected from overspray.

Plan dimensions are based on installation at 60°F. The expansion gap and other dimensions shall be increased or decreased $\frac{5}{16}$″ for each 10° fall or rise in temperature at installation.

New longitudinal reinforcing steel shall be placed and existing longitudinal reinforcing steel shall be cut/bent so that ends shall not be more than ±1″ from vertical leg of the steel armor at the expansion joint system.

Concrete shall be forced under and around steel armor and anchors. Proper consolidation of the concrete shall be achieved by localized internal vibration.

(✱) Match existing.

"THIS MEDIA SHOULD NOT BE CONSIDERED A CERTIFIED DOCUMENT."

DATE PREPARED	
1/13/2014	
ROUTE	STATE
I-670	MO
DISTRICT	SHEET NO.
BR	8
COUNTY	
JACKSON	
JOB NO.	
J4P2191	
CONTRACT ID.	
PROJECT NO.	
BRIDGE NO.	
A31362/A31391	

DATE	DESCRIPTION

IF A SEAL IS PRESENT ON THIS SHEET IT HAS BEEN ELECTRONICALLY SEALED AND DATED.

MISSOURI HIGHWAYS AND TRANSPORTATION COMMISSION
105 WEST CAPITOL
JEFFERSON CITY, MO 65102
1-888-ASK-MODOT (1-888-275-6636)

DETAILS OF STRIP SEAL AT EXPANSION JOINTS 8 & 8 RAMP NEAR INTERMEDIATE BENT NO. 26

Detailed Dec. 2013
Checked Dec. 2013

Note: This drawing is not to scale. Follow dimensions.

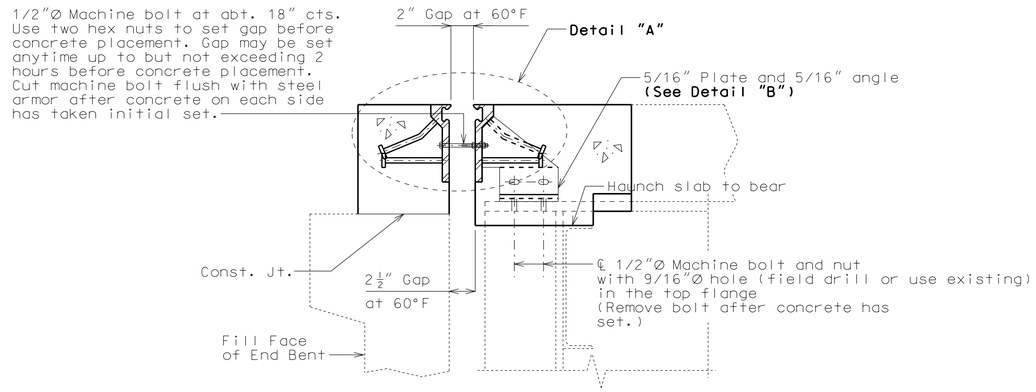

SECTION A-A

Note: Strip seal gland not shown for clarity.

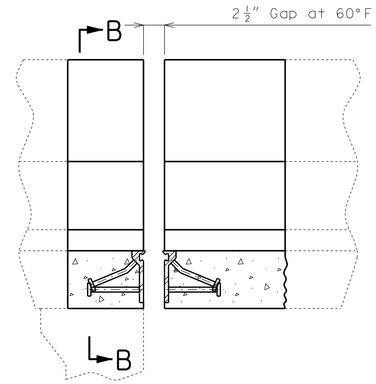

Note: Strip seal gland not shown for clarity.

PART ELEVATION OF BARRIER CURB

GENERAL NOTES:

Expansion joint system shall be fabricated in one section, except for stage construction and when the length is over 50 feet. A complete joint penetration groove welded splice shall be required. Welds shall be ground flush to provide a smooth surface. The expansion joint system shall be fabricated and installed to the crown and grade of the roadway.

The strip seal gland shall be installed in joints in one continuous piece without field splices. Factory splicing will be permitted for joints in excess of 53 feet.

Structural steel for the expansion joint system shall be ASTM A709 Grade 36 except the steel armor may be ASTM A709 Grade 50W. Anchors for the expansion joint system shall be in accordance with Sec 1037. Strip seal expansion joint system shall be in accordance with Sec 717.

Structural steel for the expansion joint system shall be coated with a minimum of two coats of inorganic zinc primer (5 mils minimum) or galvanized in accordance with ASTM A123. Anchors need not be protected from overspray.

Plan dimensions are based on installation at 60°F. The expansion gap and other dimensions shall be increased or decreased 1/8" for each 10° fall or rise in temperature at installation.

New longitudinal reinforcing steel shall be placed and existing longitudinal reinforcing steel shall be cut/bent so that ends shall not be more than ±1" from vertical leg of the steel armor at the expansion joint system.

Concrete shall be forced under and around steel armor and anchors. Proper consolidation of the concrete shall be achieved by localized internal vibration.

(✱) Match existing.

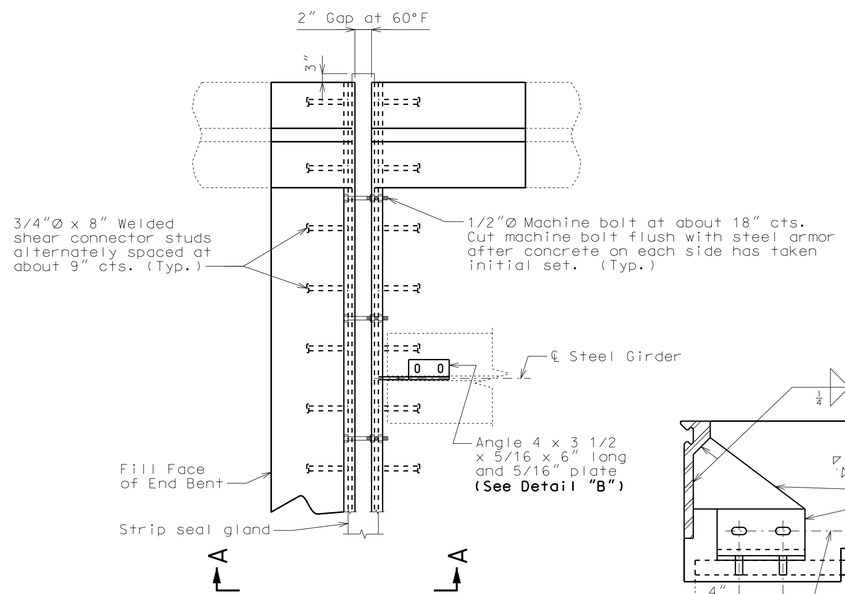

PART PLAN

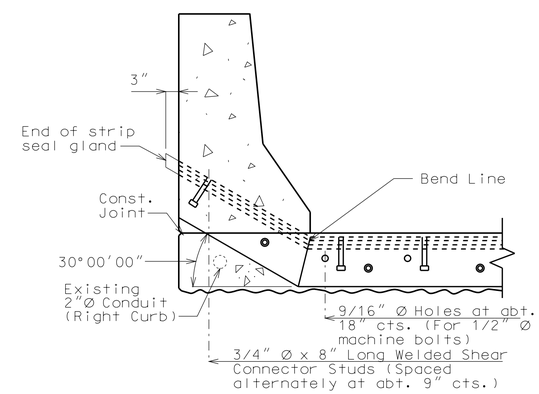

PART SECTION B-B

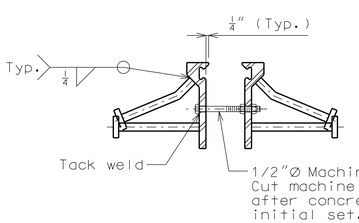

DETAIL "A"

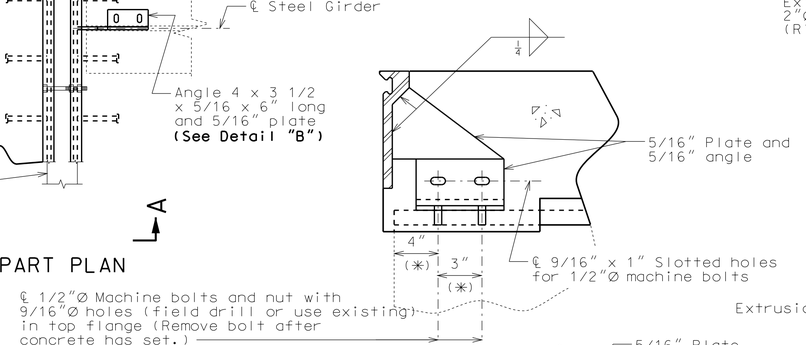

DETAIL "B"

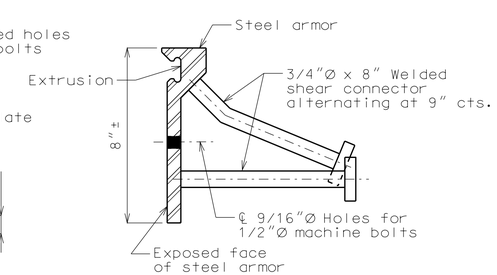

DETAIL OF JOINT ARMOR

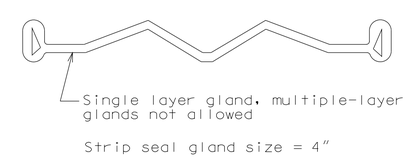

Strip seal gland size = 4"

DETAIL OF GLAND

DETAILS OF STRIP SEAL AT EXPANSION JOINT 10 NEAR END BENT NO. 30

Detailed Dec. 2013
Checked Dec. 2013

Note: This drawing is not to scale. Follow dimensions.

"THIS MEDIA SHOULD NOT BE CONSIDERED A CERTIFIED DOCUMENT."

DATE PREPARED	
1/13/2014	
ROUTE	STATE
I-670	MO
DISTRICT	SHEET NO.
BR	9
COUNTY	
JACKSON	
JOB NO.	
J4P2191	
CONTRACT ID.	
PROJECT NO.	
BRIDGE NO.	
A31362	

DATE	DESCRIPTION

MISSOURI HIGHWAYS AND TRANSPORTATION COMMISSION
105 WEST CAPITOL
JEFFERSON CITY, MO 65102
1-888-ASK-MODOT (1-888-275-6636)

IF A SEAL IS PRESENT ON THIS SHEET IT HAS BEEN ELECTRONICALLY SEALED AND DATED.

REV.

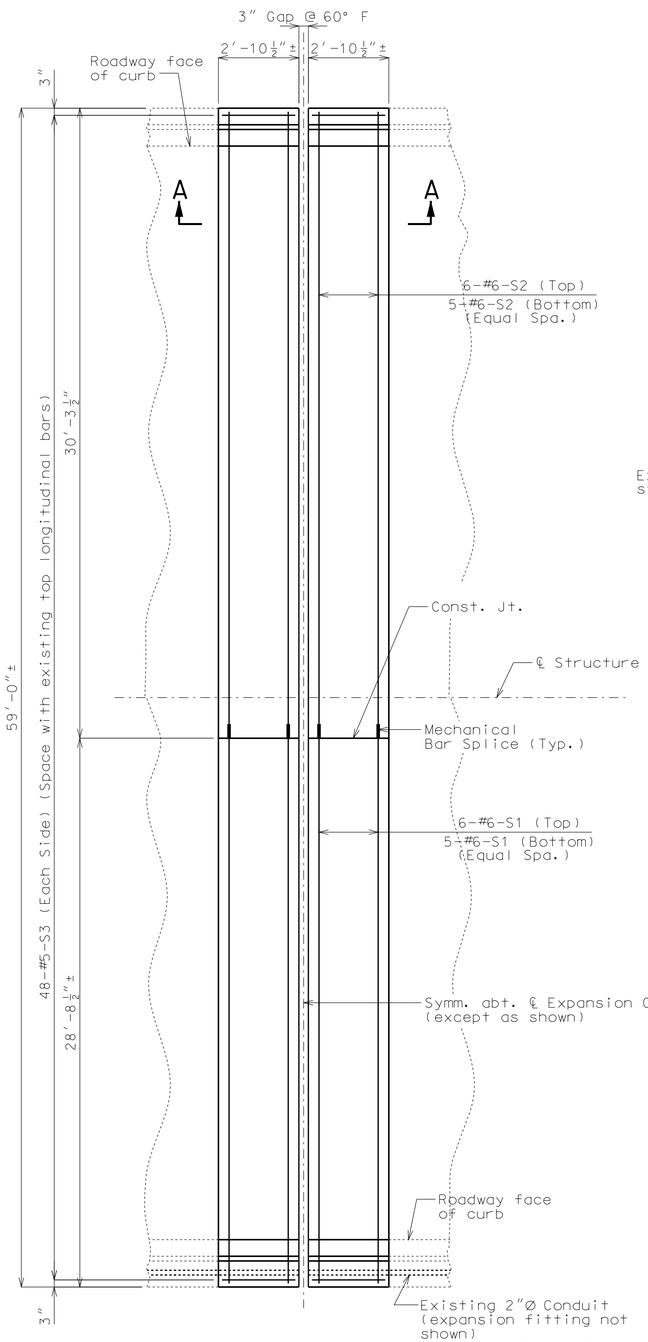

PART PLAN OF SLAB AT EXPANSION JOINT NO. 1
NEAR INT. BENT NO. 4
SHOWING REINFORCEMENT

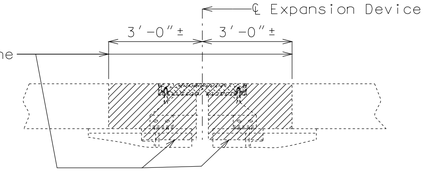

PART SECTION THRU
EXPANSION JOINT NO. 1
NEAR INTERMEDIATE BENT NO. 4
SHOWING REMOVAL

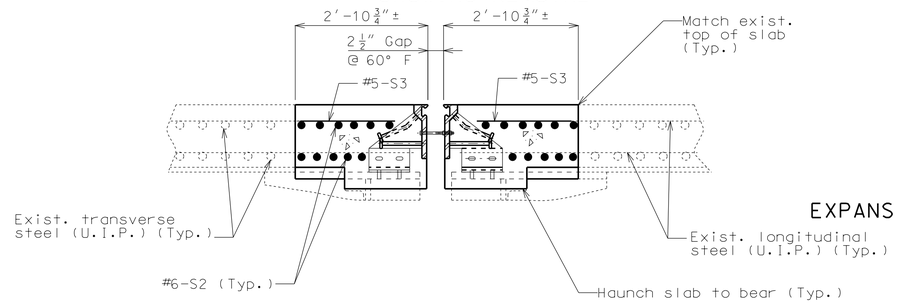

SECTION A-A

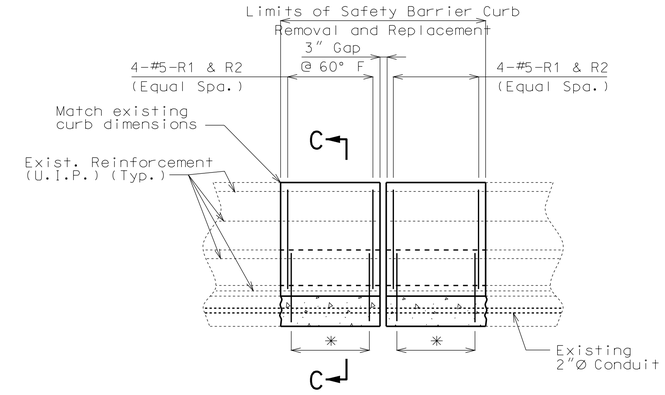

✳ 4-#5-R3 & R4 spaced with #5-R1 & R2

PART ELEVATION SHOWING RIGHT
SAFETY BARRIER CURB REINFORCEMENT AT
EXPANSION JOINT NO. 1 NEAR INTERMEDIATE BENT NO. 4

Note: Expansion device not shown for clarity.

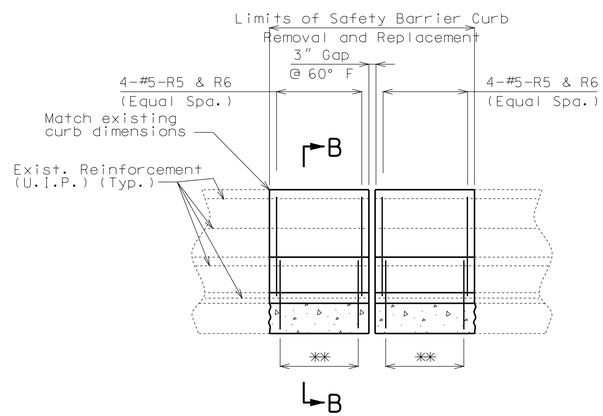

✳✳ 4-#5-R7 & R8 spaced with #5-R5 & R6

PART ELEVATION SHOWING
LEFT SAFETY BARRIER CURB REINFORCEMENT
AT EXPANSION JOINT NO. 1 NEAR INTERMEDIATE BENT NO. 4

Note: Expansion device not shown for clarity.

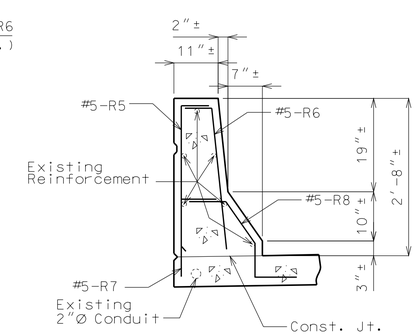

PART SECTION C-C

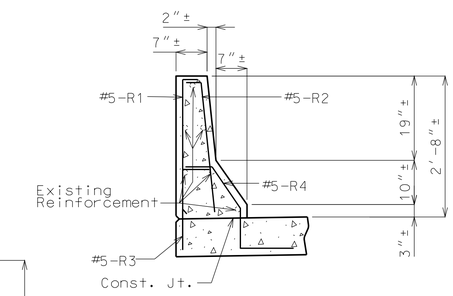

PART SECTION B-B

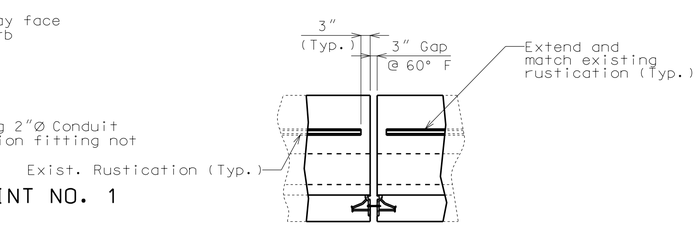

PART ELEVATION SHOWING PARTIAL
SAFETY BARRIER CURB REPLACEMENT

Note: Strip seal gland not shown for clarity.

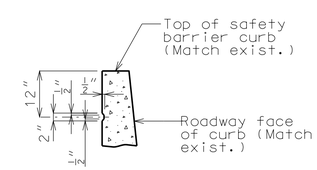

PART SECTION SHOWING
RUSTICATION DETAILS

Notes:

All exposed edges of new barrier curb shall match existing barrier curb.

Payment for concrete curb removal and all new concrete and reinforcement for barrier curb, complete-in-place, will be considered completely covered by the contract unit price for Remove and Replace Barrier Curb per linear foot.

Shift S-bars where necessary to clear the expansion device.

The contractor shall use a mechanical bar splice for #6-S1 & #6-S2 bars at the specified location. The total bar lengths for bars indicated in the bill of reinforcing steel are determined based on the end of the bars being located flush to the face of the construction joint. No additional payment will be made for any additional bar lengths required for the mechanical bar splices. Mechanical bar splices shall be in accordance with Sec 706 except that no measurement will be made for mechanical bar splice and will be considered completely covered by the contract unit price for Reinforcing Steel (Epoxy Coated).

DETAILS OF SLAB AND BARRIER CURB AT EXPANSION JOINT NO. 1 NEAR INTERMEDIATE BENT NO. 4

Detailed Dec. 2013
Checked Dec. 2013

Note: This drawing is not to scale. Follow dimensions.

"THIS MEDIA SHOULD NOT BE CONSIDERED A CERTIFIED DOCUMENT."

DATE PREPARED	1/13/2014
ROUTE	I-670
STATE	MO
DISTRICT	BR
SHEET NO.	10
COUNTY	JACKSON
JOB NO.	J4P2191
CONTRACT ID.	
PROJECT NO.	
BRIDGE NO.	A31362

DESCRIPTION

DATE

MISSOURI HIGHWAYS AND TRANSPORTATION COMMISSION

105 WEST CAPITOL
JEFFERSON CITY, MO 65102
1-888-ASK-MODOT (1-888-275-6636)

IF A SEAL IS PRESENT ON THIS SHEET IT HAS BEEN ELECTRONICALLY SEALED AND DATED.

Notes:

Top of safety barrier curb shall be built parallel to grade.

All exposed edges of safety barrier curb shall have either a $\frac{1}{2}''$ radius or a $\frac{3}{8}''$ bevel, unless otherwise noted.

Concrete in the safety barrier curb replacement shall be Class B-1.

All exposed edges of new safety barrier curb shall match existing safety barrier curb.

Payment for all curb concrete and reinforcing steel, complete-in-place, will be considered completely covered by the contract unit price for Remove and Replace Barrier Curb.

All existing longitudinal reinforcement in the safety barrier curb shall be cleaned and reused.

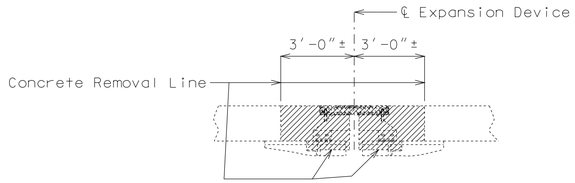

PART SECTION THRU EXPANSION JOINTS NO. 2 & 3
NEAR INTERMEDIATE BENTS NO. 8 & 9
SHOWING REMOVAL

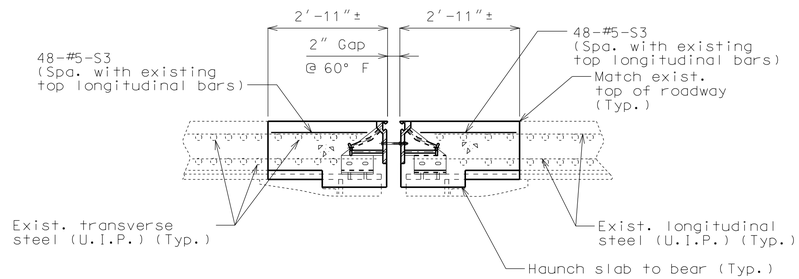

PART SECTION THRU EXPANSION JOINTS NO. 2 & 3
NEAR INTERMEDIATE BENTS NO. 8 & 9
SHOWING REINFORCEMENT

Note: Strip seal gland not shown for clarity.

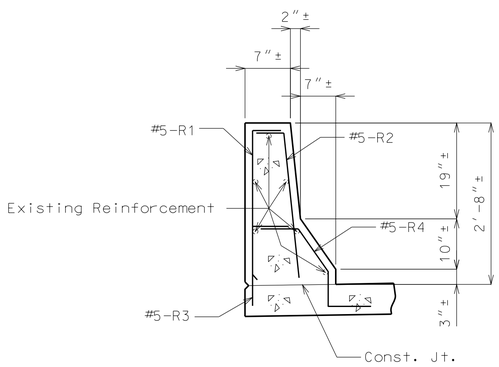

PART SECTION A-A

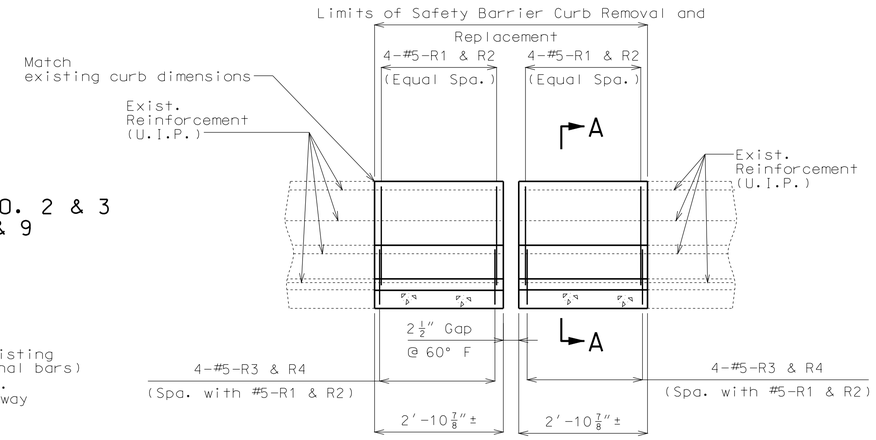

PART ELEVATION LEFT SIDE AT EXPANSION JOINTS NO. 2 & 3
NEAR INTERMEDIATE BENTS NO. 8 & 9
SHOWING BARRIER CURB REINFORCEMENT

Note: Expansion device not shown for clarity.

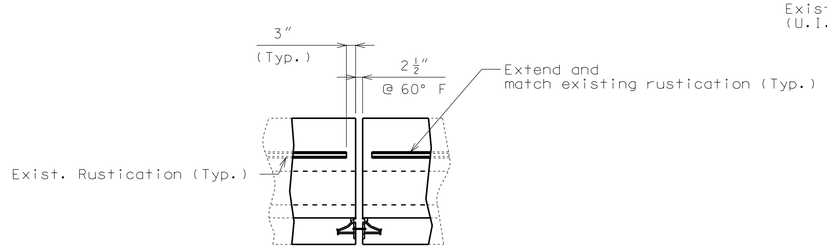

PART ELEVATION SHOWING PARTIAL
SAFETY BARRIER CURB REPLACEMENT

Note: Strip seal gland not shown for clarity.

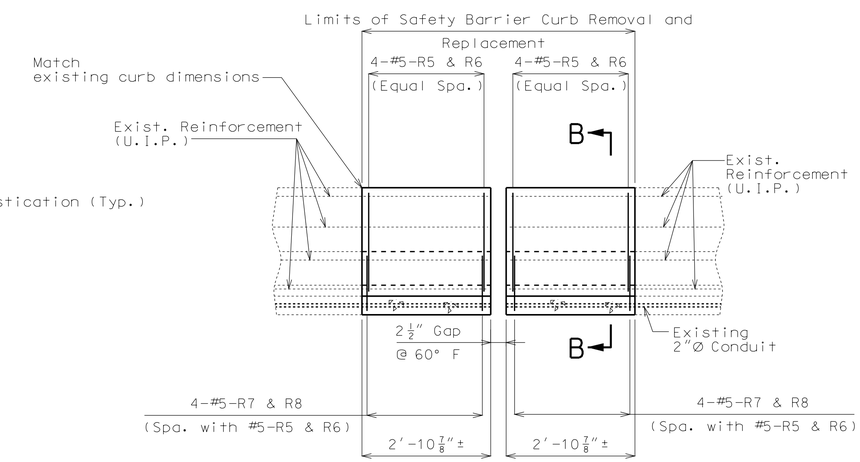

PART ELEVATION RIGHT SIDE AT EXPANSION JOINTS NO. 2 & 3
NEAR INTERMEDIATE BENTS NO. 8 & 9
SHOWING BARRIER CURB REINFORCEMENT

Note: Expansion device not shown for clarity.

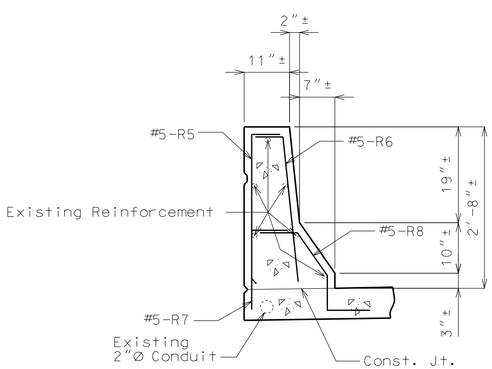

PART SECTION B-B

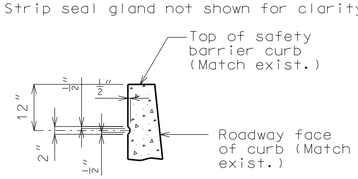

PART SECTION SHOWING
RUSTICATION DETAILS

DETAILS OF SLAB AND BARRIER CURB AT EXPANSION JOINTS NO. 2 & 3 NEAR INTERMEDIATE BENTS NO. 8 & 9

Detailed Dec. 2013
Checked Dec. 2013

Note: This drawing is not to scale. Follow dimensions.

"THIS MEDIA SHOULD NOT BE CONSIDERED A CERTIFIED DOCUMENT."

DATE PREPARED	1/13/2014
ROUTE	I-670
STATE	MO
DISTRICT	BR
SHEET NO.	11
COUNTY	JACKSON
JOB NO.	J4P2191
CONTRACT ID.	
PROJECT NO.	
BRIDGE NO.	A31362

DESCRIPTION

DATE

MISSOURI HIGHWAYS AND TRANSPORTATION COMMISSION

105 WEST CAPITOL
JEFFERSON CITY, MO 65102
1-888-ASK-MODOT (1-888-275-6636)

IF A SEAL IS PRESENT ON THIS SHEET IT HAS BEEN ELECTRONICALLY SEALED AND DATED.

Notes:

Top of safety barrier curb shall be built parallel to grade.

All exposed edges of safety barrier curb shall have either a $\frac{1}{2}''$ radius or a $\frac{3}{8}''$ bevel, unless otherwise noted.

Concrete in the safety barrier curb replacement shall be Class B-1.

All exposed edges of new safety barrier curb shall match existing safety barrier curb.

Payment for all curb concrete and reinforcing steel, complete-in-place, will be considered completely covered by the contract unit price for Remove and Replace Barrier Curb.

All existing longitudinal reinforcement in the safety barrier curb shall be cleaned and reused.

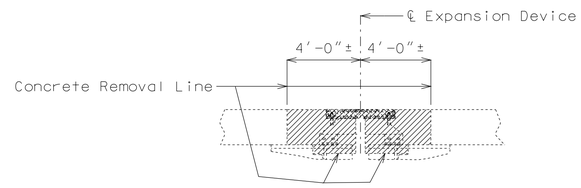

PART SECTION THRU EXPANSION JOINTS NO. 4 & 5
NEAR INTERMEDIATE BENTS NO. 12 & 16
SHOWING REMOVAL

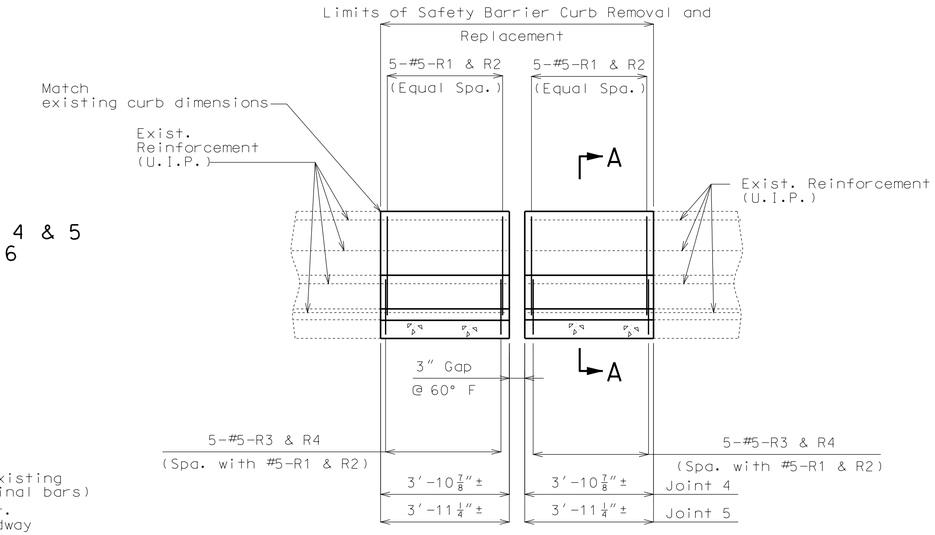

PART ELEVATION LEFT SIDE AT EXPANSION JOINTS NO. 4 & 5
NEAR INTERMEDIATE BENTS NO. 12 & 16
SHOWING BARRIER CURB REINFORCEMENT

Note: Expansion device not shown for clarity.

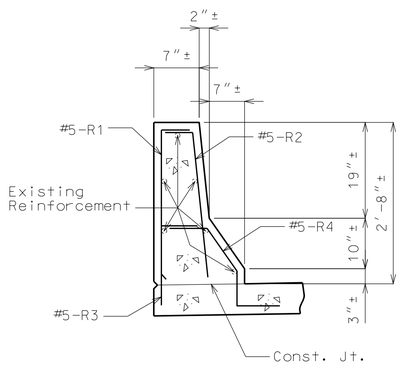

PART SECTION A-A

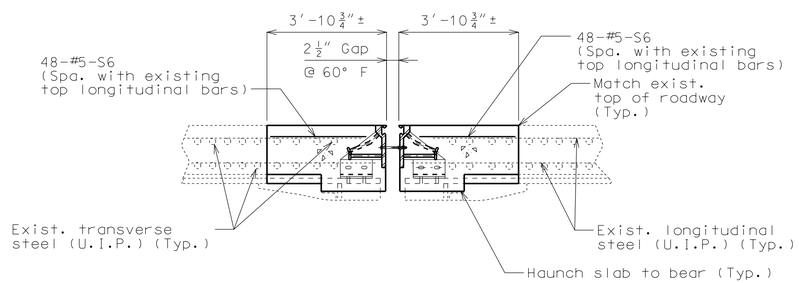

PART SECTION THRU EXPANSION JOINTS NO. 4 & 5
NEAR INTERMEDIATE BENTS NO. 12 & 16
SHOWING REINFORCEMENT

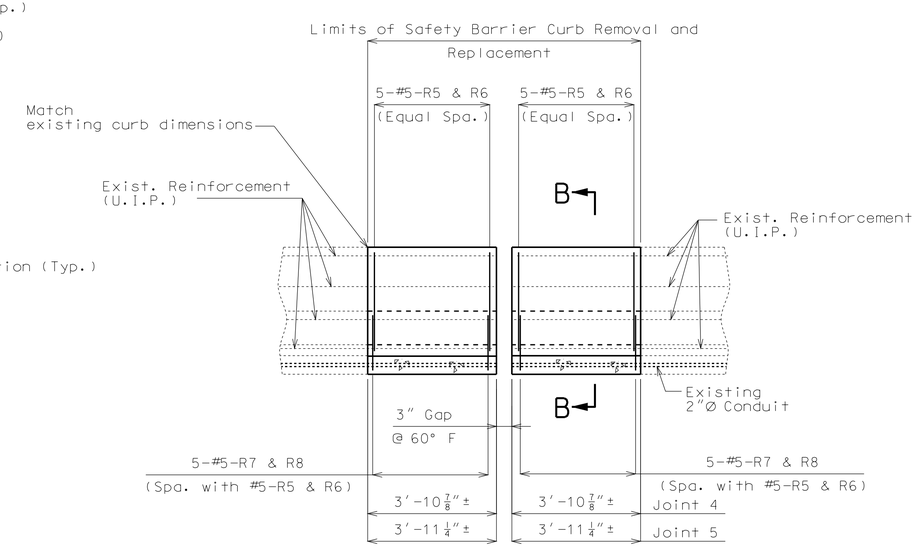

PART ELEVATION RIGHT SIDE AT EXPANSION JOINTS NO. 4 & 5
NEAR INTERMEDIATE BENTS NO. 12 & 16
SHOWING BARRIER CURB REINFORCEMENT

Note: Expansion device not shown for clarity.

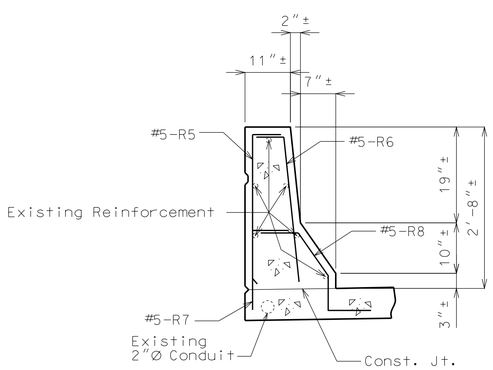

PART SECTION B-B

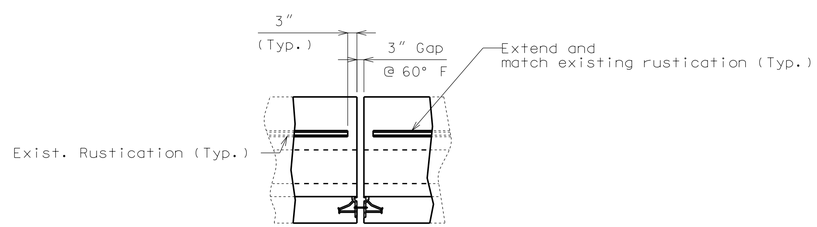

PART ELEVATION SHOWING PARTIAL
SAFETY BARRIER CURB REPLACEMENT

Note: Strip seal gland not shown for clarity.

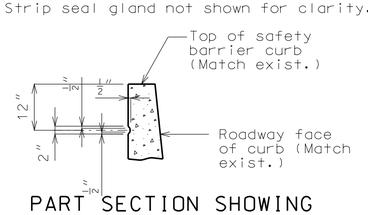

PART SECTION SHOWING
RUSTICATION DETAILS

DETAILS OF SLAB AND BARRIER CURB AT EXPANSION JOINTS NO. 4 & 5 NEAR INTERMEDIATE BENTS NO. 12 & 16

Detailed Dec. 2013
Checked Dec. 2013

Note: This drawing is not to scale. Follow dimensions.

"THIS MEDIA SHOULD NOT BE CONSIDERED A CERTIFIED DOCUMENT."

DATE PREPARED	
1/13/2014	
ROUTE	STATE
I-670	MO
DISTRICT	SHEET NO.
BR	12
COUNTY	
JACKSON	
JOB NO.	
J4P2191	
CONTRACT ID.	
PROJECT NO.	
BRIDGE NO.	
A31362	

DATE	DESCRIPTION

MISSOURI HIGHWAYS AND TRANSPORTATION COMMISSION
105 WEST CAPITOL
JEFFERSON CITY, MO 65102
1-888-ASK-MODOT (1-888-275-6636)

IF A SEAL IS PRESENT ON THIS SHEET IT HAS BEEN ELECTRONICALLY SEALED AND DATED.

Notes:

Top of safety barrier curb shall be built parallel to grade.

All exposed edges of safety barrier curb shall have either a $\frac{1}{2}''$ radius or a $\frac{3}{8}''$ bevel, unless otherwise noted.

Concrete in the safety barrier curb replacement shall be Class B-1.

All exposed edges of new safety barrier curb shall match existing safety barrier curb.

Payment for all curb concrete and reinforcing steel, complete-in-place, will be considered completely covered by the contract unit price for Remove and Replace Barrier Curb.

All existing longitudinal reinforcement in the safety barrier curb shall be cleaned and reused.

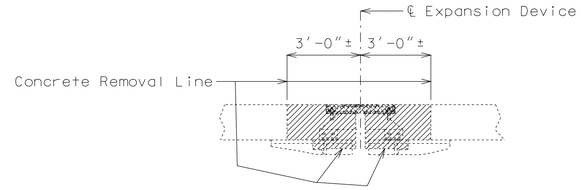

PART SECTION THRU EXPANSION JOINT NO. 6
NEAR INTERMEDIATE BENT NO. 20 SHOWING REMOVAL

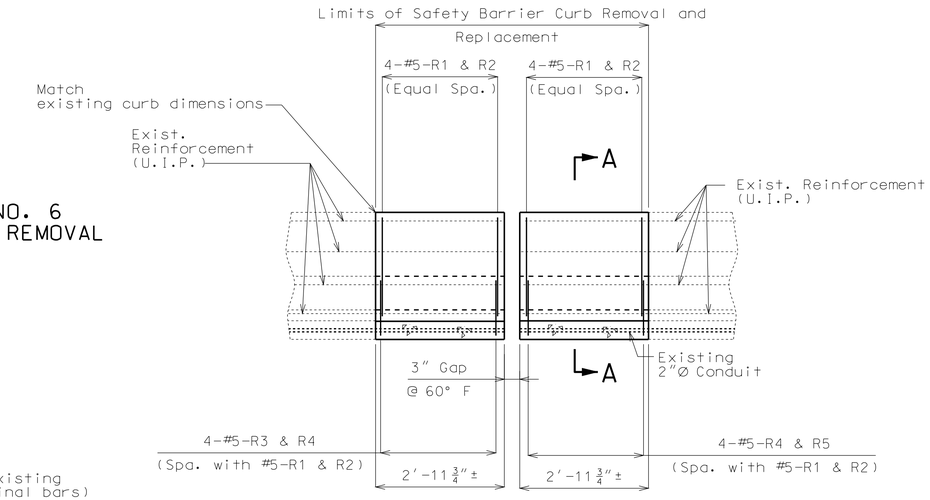

PART ELEVATION RIGHT SIDE AT EXPANSION JOINT NO. 6
NEAR INTERMEDIATE BENT NO. 20 SHOWING BARRIER CURB REINFORCEMENT

Note: Expansion device not shown for clarity.

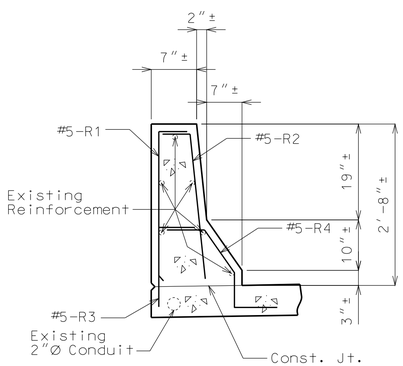

PART SECTION A-A

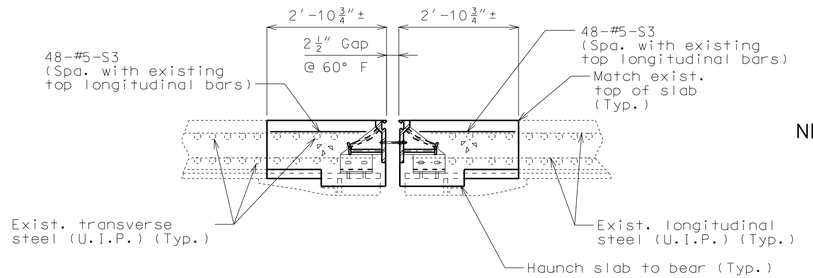

PART SECTION AT EXPANSION JOINT NO. 6
NEAR INTERMEDIATE BENT NO. 20 SHOWING REINFORCEMENT

Note: Strip seal gland not shown for clarity.

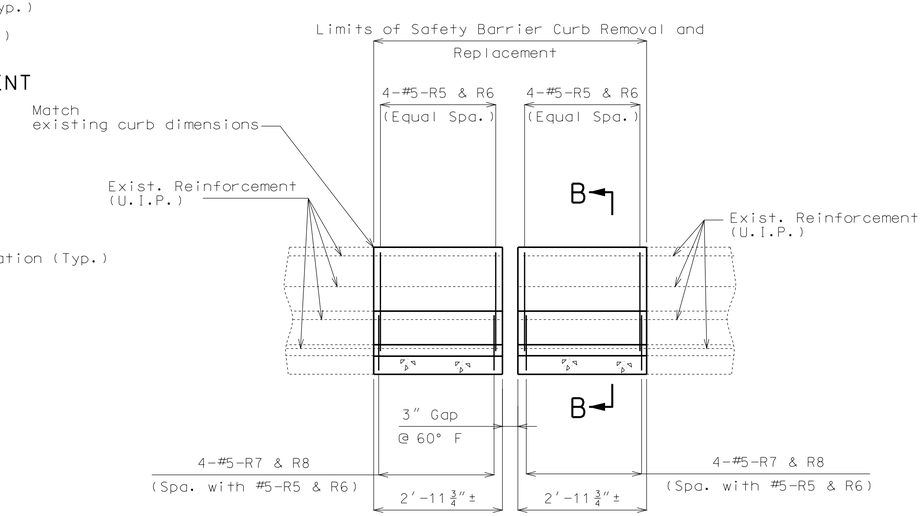

PART ELEVATION LEFT SIDE AT EXPANSION JOINT NO. 6
NEAR INTERMEDIATE BENT NO. 20 SHOWING BARRIER CURB REINFORCEMENT

Note: Expansion device not shown for clarity.

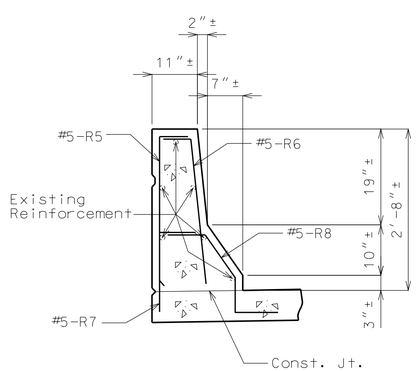

PART SECTION B-B

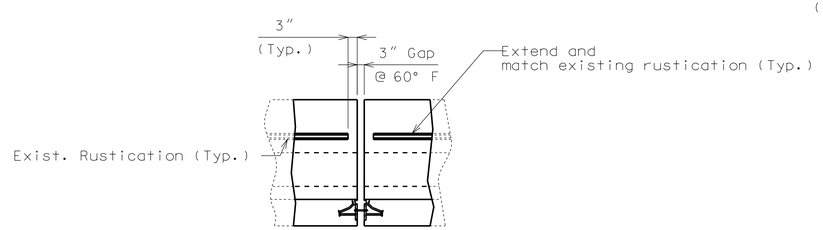

PART ELEVATION SHOWING PARTIAL
SAFETY BARRIER CURB REPLACEMENT

Note: Strip seal gland not shown for clarity.

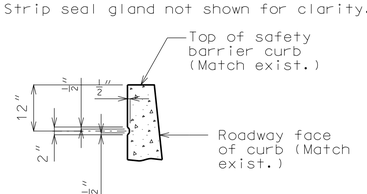

PART SECTION SHOWING
RUSTICATION DETAILS

DETAILS OF SLAB AND BARRIER CURB AT EXPANSION JOINT NO. 6 NEAR INTERMEDIATE BENT NO. 20

Note: This drawing is not to scale. Follow dimensions.

Detailed Dec. 2013
Checked Dec. 2013

"THIS MEDIA SHOULD NOT BE CONSIDERED A CERTIFIED DOCUMENT."

DATE PREPARED	
1/13/2014	
ROUTE	STATE
I-670	MO
DISTRICT	SHEET NO.
BR	13
COUNTY	
JACKSON	
JOB NO.	
J4P2191	
CONTRACT ID.	
PROJECT NO.	
BRIDGE NO.	
A31362	

DATE	DESCRIPTION

MISSOURI HIGHWAYS AND TRANSPORTATION COMMISSION
105 WEST CAPITOL
JEFFERSON CITY, MO 65102
1-888-ASK-MODOT (1-888-275-6636)

IF A SEAL IS PRESENT ON THIS SHEET IT HAS BEEN ELECTRONICALLY SEALED AND DATED.

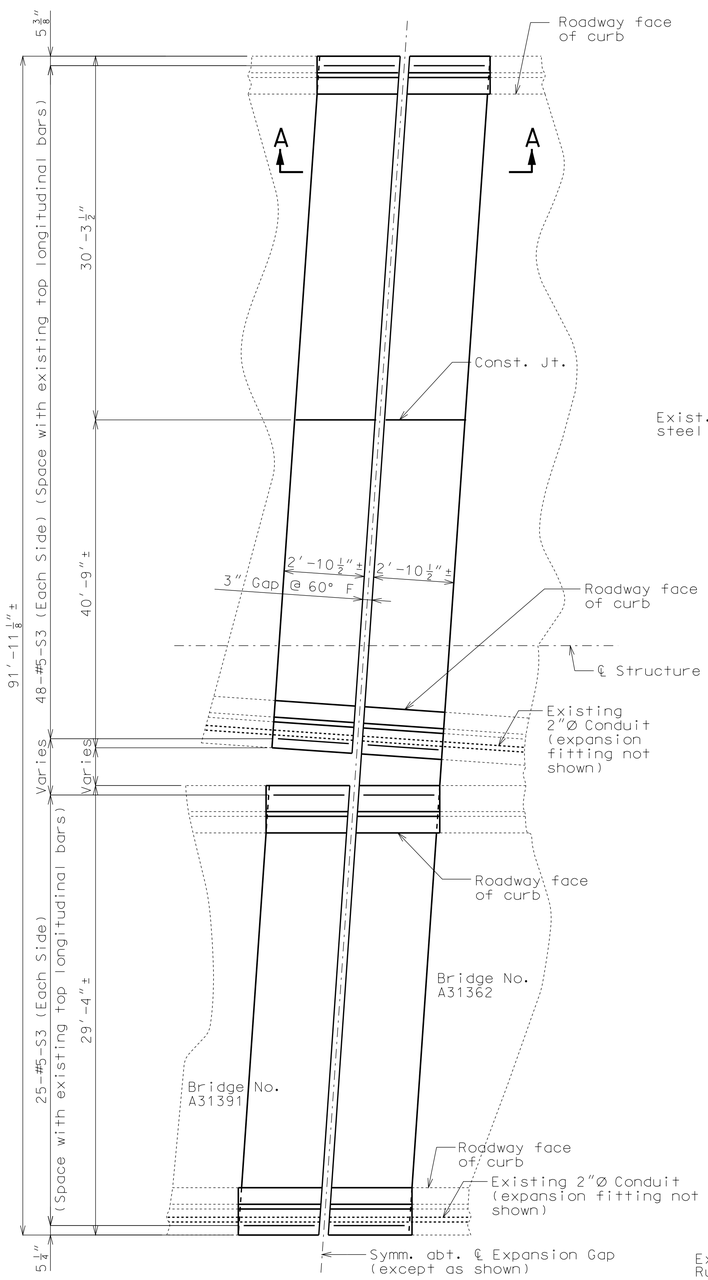

PART PLAN OF SLAB AT EXPANSION JOINT NO. 8
NEAR INT. BENT NO. 26
SHOWING REINFORCEMENT

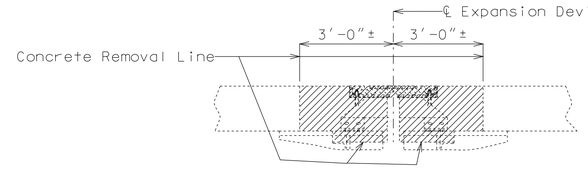

PART SECTION THRU
EXPANSION DEVICE @ JOINT NO. 8
NEAR INT. BENT NO. 26
SHOWING REMOVAL

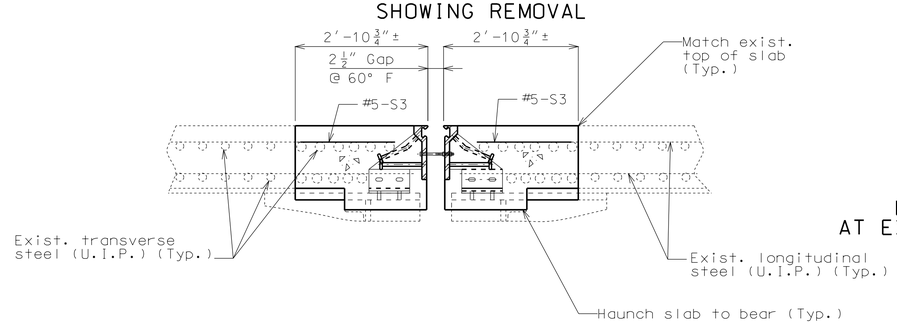

SECTION A-A
Note: Strip deal gland not shown for clarity.

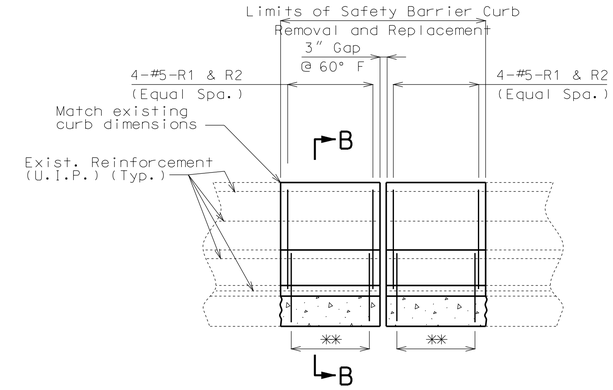

** 4-#5-R3 & R4 spaced with #5-R1 & R2

PART ELEVATION SHOWING
LEFT SAFETY BARRIER CURB REINFORCEMENT
AT EXPANSION JOINT NO. 8 NEAR INT. BENT NO. 26

Note: Expansion device not shown for clarity.

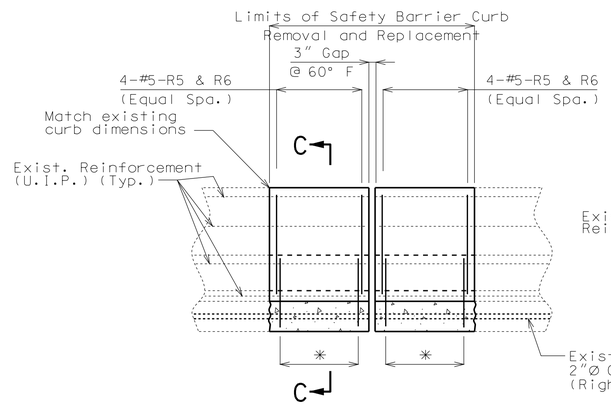

* 4-#5-R7 & R8 spaced with #5-R5 & R6

PART ELEVATION SHOWING
RIGHT SAFETY BARRIER CURB REINFORCEMENT
AT EXPANSION JOINT NO. 8 & LEFT & RIGHT
SAFETY BARRIER CURB REINFORCEMENT AT
EXPANSION JOINT NO. 8 RAMP NEAR INT. BENT NO. 26

Note: Expansion device not shown for clarity.
Right side barrier shown, left barrier similar.

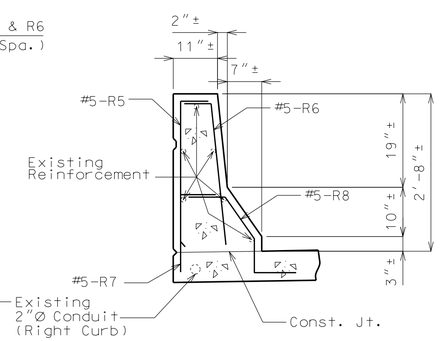

PART SECTION C-C

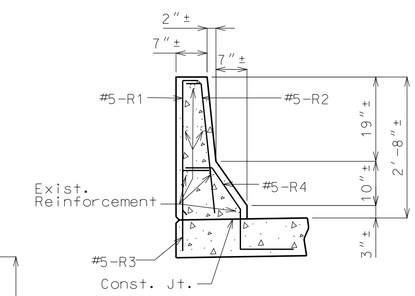

PART SECTION B-B

Notes:

All exposed edges of new barrier curb shall match existing barrier curb.

Payment for concrete curb removal and all new concrete and reinforcement for barrier curb, complete-in-place, will be considered completely covered by the contract unit price for Remove and Replace Barrier Curb per linear foot.

Shift S-bars where necessary to clear the expansion device.

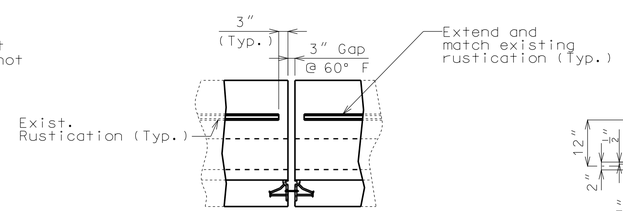

PART ELEVATION SHOWING PARTIAL
SAFETY BARRIER CURB REPLACEMENT

Note: Strip seal gland not shown for clarity.

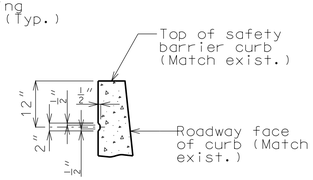

PART SECTION SHOWING
RUSTICATION DETAILS

DETAILS OF SLAB AND BARRIER CURB AT EXPANSION JOINT 8 & 8 RAMP NEAR INTERMEDIATE BENT NO. 26

Detailed Dec. 2013
Checked Dec. 2013

Note: This drawing is not to scale. Follow dimensions.

"THIS MEDIA SHOULD NOT BE CONSIDERED A CERTIFIED DOCUMENT."

DATE PREPARED	1/13/2014
ROUTE	I-670
STATE	MO
DISTRICT	BR
SHEET NO.	14
COUNTY	JACKSON
JOB NO.	J4P2191
CONTRACT ID.	
PROJECT NO.	
BRIDGE NO.	A31362/A31391

DATE	DESCRIPTION

MISSOURI HIGHWAYS AND TRANSPORTATION COMMISSION
105 WEST CAPITOL
JEFFERSON CITY, MO 65102
1-888-ASK-MODOT (1-888-275-6636)

IF A SEAL IS PRESENT ON THIS SHEET IT HAS BEEN ELECTRONICALLY SEALED AND DATED.

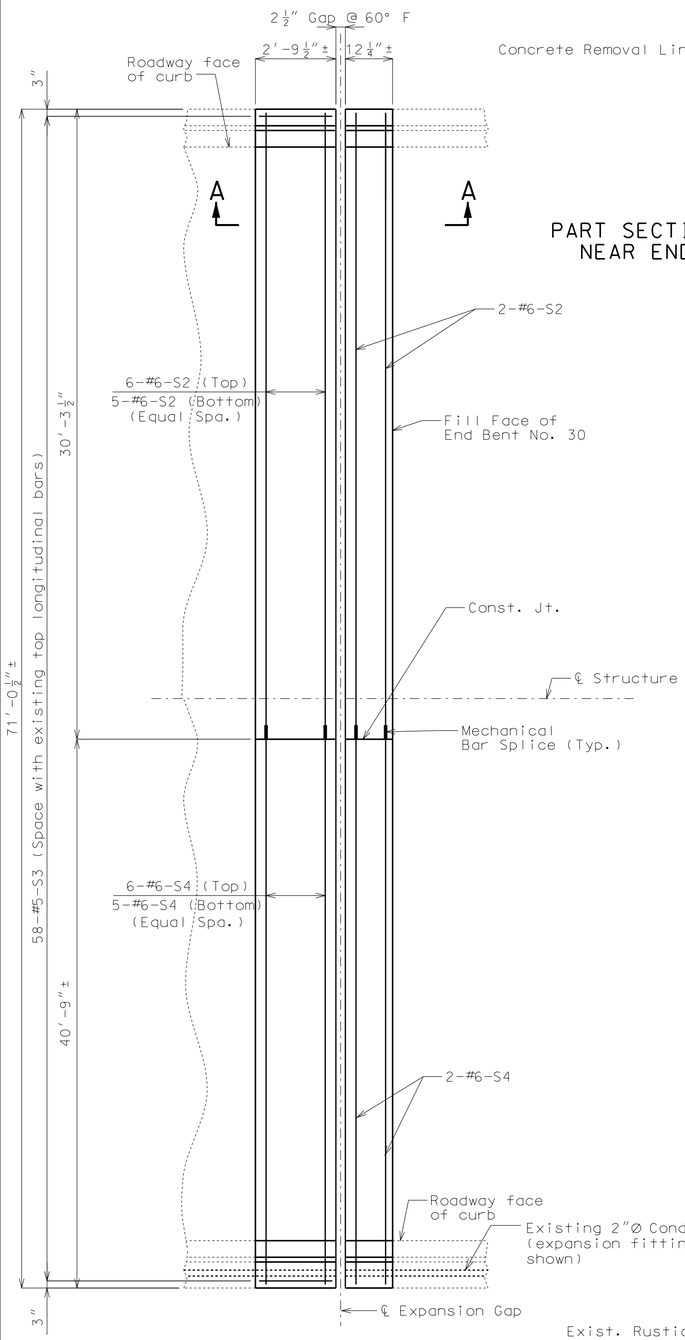

PART PLAN OF SLAB AT EXPANSION JOINT NO. 10
NEAR END BENT NO. 30
SHOWING REINFORCEMENT

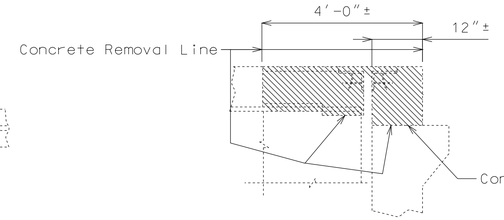

PART SECTION THRU EXPANSION JOINT NO. 10
NEAR END BENT NO. 30 SHOWING REMOVAL

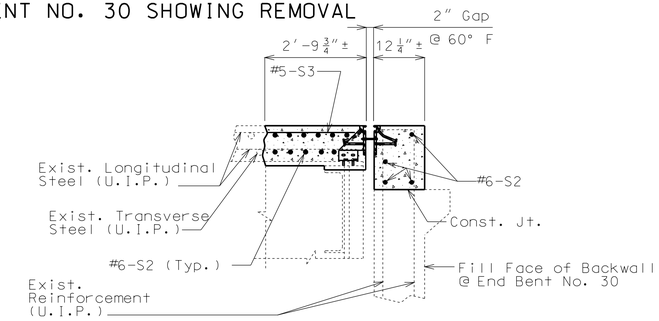

SECTION A-A

Note: Strip seal gland not shown for clarity.

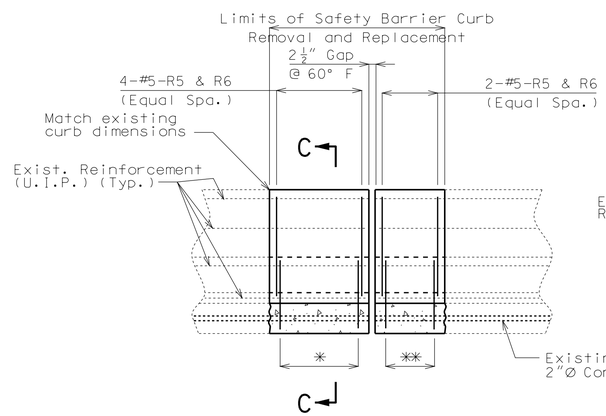

* 4-#5-R7 & R8 spaced with #5-R5 & R6

** 2-#5-R7 & R8 spaced with #5-R5 & R6

PART ELEVATION SHOWING
RIGHT SAFETY BARRIER CURB REINFORCEMENT
AT EXPANSION JOINT NO. 10 NEAR END BENT NO. 30

Note: Expansion device not shown for clarity.

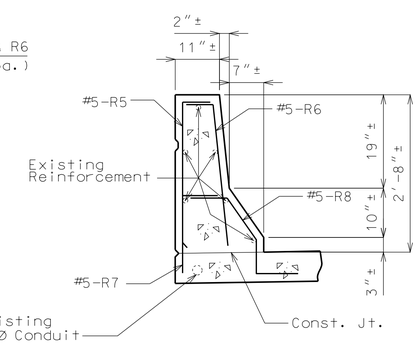

PART SECTION C-C

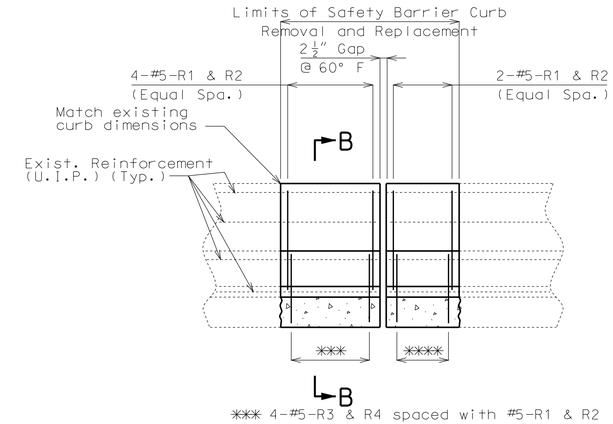

*** 4-#5-R3 & R4 spaced with #5-R1 & R2

**** 2-#5-R3 & R4 spaced with #5-R1 & R2

PART ELEVATION SHOWING
LEFT SAFETY BARRIER CURB REINFORCEMENT
AT EXPANSION JOINT NO. 10 NEAR END BENT NO. 30

Note: Expansion device not shown for clarity.

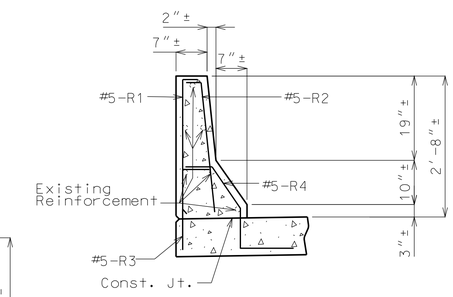

PART SECTION B-B

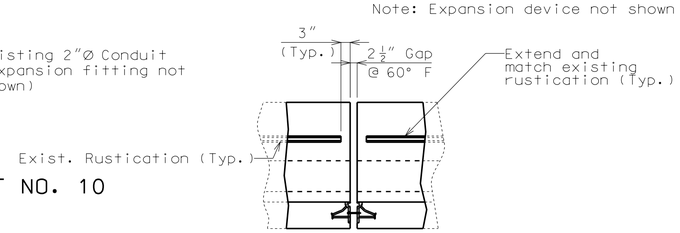

PART ELEVATION SHOWING PARTIAL
SAFETY BARRIER CURB REPLACEMENT

Note: Strip seal gland not shown for clarity.

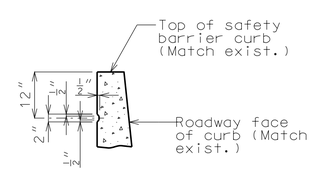

PART SECTION SHOWING
RUSTICATION DETAILS

Notes:

All exposed edges of new barrier curb shall match existing barrier curb.

Payment for concrete curb removal and all new concrete and reinforcement for barrier curb, complete-in-place, will be considered completely covered by the contract unit price for Remove and Replace Barrier Curb per linear foot.

Shift S-bars where necessary to clear the expansion device.

The contractor shall use a mechanical bar splice for #6-S2 & #6-S4 bars at the specified location. The total bar lengths for bars indicated in the bill of reinforcing steel are determined based on the end of the bars being located flush to the face of the construction joint. No additional payment will be made for any additional bar lengths required for the mechanical bar splices. Mechanical bar splices shall be in accordance with Sec 706 except that no measurement will be made for mechanical bar splice and will be considered completely covered by the contract unit price for Reinforcing Steel (Epoxy Coated).

DETAILS OF SLAB AND BARRIER CURB AT EXPANSION JOINT NO. 10 NEAR END BENT NO. 30

Note: This drawing is not to scale. Follow dimensions.

Detailed Dec. 2013
Checked Dec. 2013

"THIS MEDIA SHOULD NOT BE CONSIDERED A CERTIFIED DOCUMENT."

DATE PREPARED	1/13/2014
ROUTE	I-670
STATE	MO
DISTRICT	BR
SHEET NO.	15
COUNTY	JACKSON
JOB NO.	J4P2191
CONTRACT ID.	
PROJECT NO.	
BRIDGE NO.	A31362

DESCRIPTION

DATE

MISSOURI HIGHWAYS AND TRANSPORTATION COMMISSION

105 WEST CAPITOL
JEFFERSON CITY, MO 65102
1-888-ASK-MODOT (1-888-275-6636)

IF A SEAL IS PRESENT ON THIS SHEET IT HAS BEEN ELECTRONICALLY SEALED AND DATED.

BILL OF REINFORCING STEEL

NO. REQ'D.	MARK NO. SIZE	MARK NO. MARK	LOCATION	EPOXY (E)	SHAPE NO.	STIRRUP (S)	SUBSTR. (X)	VARIES (V)	NO. EACH	B FT. IN.	C FT. IN.	D FT. IN.	E FT. IN.	F FT. IN.	H FT. IN.	K FT. IN.	NOMINAL LENGTH FT. IN.	ACTUAL LENGTH FT. IN.	WEIGHT LBS.
			SLAB																
22	6	S1	SLAB	E	20					28 7.000							28 7	28 7	945
37	6	S2	SLAB	E	20					30 2.000							30 2	30 2	1676
588	5	S3	SLAB	E	20					2 7.000							2 7	2 7	1584
17	6	S4	SLAB	E	20					40 7.000							40 7	40 7	1036
192	5	S6	SLAB	E	20					3 7.000							3 7	3 7	718
			BARRIER CURB																
66	5	R1	BARRIER CURB	E	19	S				2 6.000	3.500						2 10	2 8	184
66	5	R2	BARRIER CURB	E	15	S				2 6.125	3.500				2 6.000	3.000	2 10	2 9	189
66	5	R3	BARRIER CURB	E	19	S				17.000	6.000						0 23	0 22	126
66	5	R4	BARRIER CURB	E	27	S					6.000	11.125	7.000	12.000	9.125	6.375	3 0	2 10	195
82	5	R5	BARRIER CURB	E	19	S				2 6.000	7.500						3 2	3 0	257
82	5	R6	BARRIER CURB	E	15	S				2 6.125	7.500				2 6.000	3.000	3 2	3 1	264
82	5	R7	BARRIER CURB	E	19	S				17.000	10.000						2 3	2 2	185
82	5	R8	BARRIER CURB	E	27	S					10.000	11.125	7.000	12.000	9.125	6.375	3 4	3 2	271
			TOTALS																
	5			E															3973
	6			E															3657
			TOTAL																0
			TOTAL	E															7630
			Slab on Girder																
	5			E															2302
	6			E															3657
			TOTAL																5959
			Safety Barrier Curb																
	5			E															1671
			TOTAL																1671

BILL OF REINFORCING STEEL

NO. REQ'D.	MARK NO. SIZE	MARK NO. MARK	LOCATION	EPOXY (E)	SHAPE NO.	STIRRUP (S)	SUBSTR. (X)	VARIES (V)	NO. EACH	B FT. IN.	C FT. IN.	D FT. IN.	E FT. IN.	F FT. IN.	H FT. IN.	K FT. IN.	NOMINAL LENGTH FT. IN.	ACTUAL LENGTH FT. IN.	WEIGHT LBS.

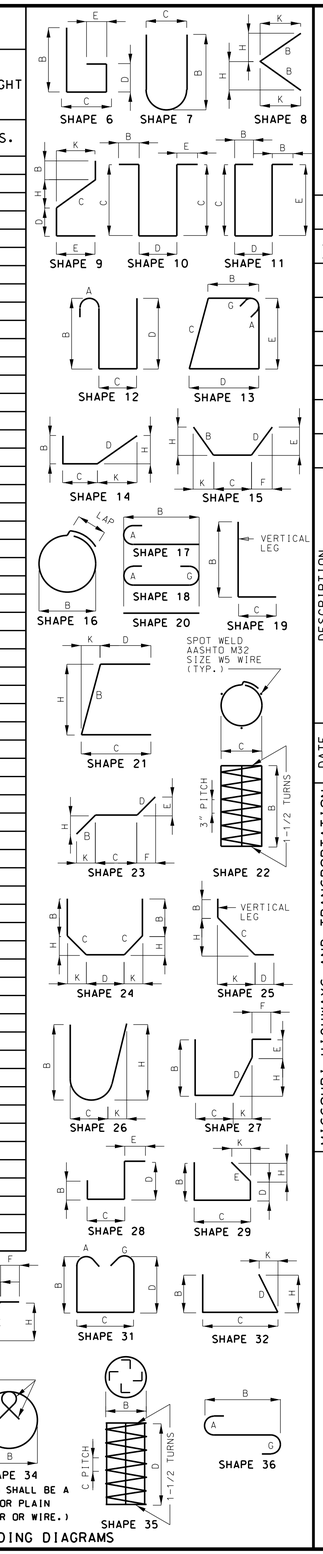

BENDING DIAGRAMS

"THIS MEDIA SHOULD NOT BE CONSIDERED A CERTIFIED DOCUMENT."

DATE PREPARED	1/13/2014
ROUTE	I-670
STATE	MO
DISTRICT	BR
SHEET NO.	16
COUNTY	JACKSON
JOB NO.	J4P2191
CONTRACT ID.	
PROJECT NO.	
BRIDGE NO.	A31362

DATE	DESCRIPTION

MISSOURI HIGHWAYS AND TRANSPORTATION COMMISSION

105 WEST CAPITOL
JEFFERSON CITY, MO 65102
1-888-ASK-MODOT (1-888-275-6636)

IF A SEAL IS PRESENT ON THIS SHEET IT HAS BEEN ELECTRONICALLY SEALED AND DATED.

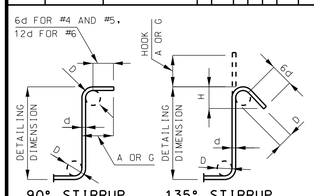

STIRRUP HOOK DIMENSIONS				
GRADES 40 - 50 - 60 KSI				
BAR SIZE	D (IN.)	90° HOOK	135° HOOK	
		HOOK A OR G	HOOK A OR G	APPROX. H
#4	2"	4 1/2"	4 1/2"	3"
#5	2 1/2"	6"	5 1/2"	3 3/4"
#6	4 1/2"	12"	8"	4 1/2"

NOTE: UNLESS OTHERWISE NOTED DIAMETER "D" IS THE SAME FOR ALL BENDS AND HOOKS ON A BAR.

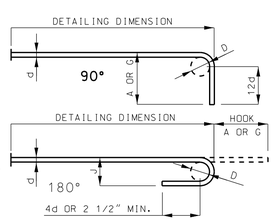

END HOOK DIMENSIONS				
BAR SIZE	D (IN.)	ALL GRADES		
		180° HOOKS		90° HOOKS
		A OR G	J	A OR G
#3	2 1/4"	5"	3"	6"
#4	3"	6"	4"	8"
#5	3 3/4"	7"	5"	10"
#6	4 1/2"	8"	6"	12"
#7	5 1/4"	10"	7"	14"
#8	6"	11"	8"	16"
#9	9 1/2"	15"	11 3/4"	19"
#10	10 3/4"	17"	13 1/4"	22"
#11	12"	19"	14 3/4"	2'-0"
#14	18 1/4"	2'-3"	21 3/4"	2'-7"

TWO ADDITIONAL #6-S4 ARE INCLUDED IN THE BAR BILL FOR TESTING.

NOTE:
ALL STANDARD HOOKS AND BENDS OTHER THAN 180 DEGREE ARE TO BE BENT WITH SAME PROCEDURE AS FOR 90 DEGREE STANDARD HOOKS.
HOOKS AND BENDS SHALL BE IN ACCORDANCE WITH THE PROCEDURES AS SHOWN ON THIS SHEET.
E = EPOXY COATED REINFORCEMENT.
S = STIRRUP.
X = BAR IS INCLUDED IN SUBSTRUCTURE QUANTITIES.
V = BAR DIMENSIONS VARY IN EQUAL INCREMENTS BETWEEN DIMENSIONS SHOWN ON THIS LINE AND THE FOLLOWING LINE.
NO. EA. = NUMBER OF BARS OF EACH LENGTH.
NOMINAL LENGTHS ARE BASED ON OUT TO OUT DIMENSIONS SHOWN IN BENDING DIAGRAMS AND ARE LISTED FOR FABRICATORS USE. (NEAREST INCH)
ACTUAL LENGTHS ARE MEASURED ALONG CENTERLINE BAR TO THE NEAREST INCH.
PAYWEIGHTS ARE BASED ON ACTUAL LENGTHS.
FOUR ANGLE OR CHANNEL SPACERS ARE REQUIRED FOR EACH COLUMN SPIRAL. SPACERS ARE TO BE PLACED ON INSIDE OF SPIRALS. LENGTH AND WEIGHT OF COLUMN SPIRALS DO NOT INCLUDE SPLICES OR SPACERS.
REINFORCING STEEL (GRADE 60) FY = 60,000 PSI.

Detailed Dec. 2013
Checked Dec. 2013

Note: This drawing is not to scale. Follow dimensions.

MISSOURI HIGHWAYS AND TRANSPORTATION COMMISSION

U.I.P. AND REHABILITATE EXISTING (44'-65'-65'-65'-61')
CONTINUOUS VOIDED SLAB SPANS,(4'-76'-100'-136'-113'-92')(6'-122'-139')
CONTINUOUS COMPOSITE PLATE GIRDER SPANS

SEC/SUR 6 TWP 49N RGE 33W

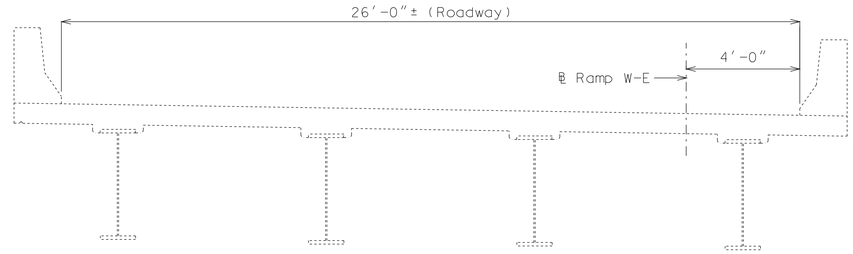

TYPICAL SECTION THRU SLAB

GENERAL NOTES:

Design Specifications:

2002 - AASHTO LFD (17th Edition) Standard Specifications
Bridge Deck Rating = 7

Design Loading:

HS20-44 (1979 & New Construction)
Military 24,000# Tandem Axle

Design Unit Stresses:

Class B-1 Concrete (Slab & Safety Barrier Curb) f'c = 4,000 psi

Reinforcing Steel (Grade 60) fy = 60,000 psi

Reinforcing Steel:

Minimum clearance to reinforcing steel shall be 1½", unless otherwise shown.

Expansion Joints:

The concrete for slab and barrier curb replacement shall be Class B-1.

Payment for slab concrete, complete-in-place, for expansion joint replacement will be considered completely covered by the contract unit price for Class B-1 concrete per cu. yard.

Payment for furnishing and installing slab reinforcing steel, complete-in-place, for expansion joint replacement will be considered completely covered by the contract unit price for Reinforcing Steel (Epoxy Coated).

Concrete Protective Coatings:

Protective coating for concrete bents and piers (Urethane) shall be applied as shown on the bridge plans and in accordance with Sec 711.

Miscellaneous:

Bars bonded in old concrete not removed shall be cleanly stripped and embedded into new concrete where possible. If length is available, old bars shall extend into new concrete at least 40 diameters for smooth bars and 30 diameters for deformed bars, unless otherwise noted.

Outline of old work is indicated by light dashed lines. Heavy lines indicate new work.

Contractor shall verify all dimensions in field before ordering new material.

The area exposed by the removal of concrete and not covered with new concrete shall be coated with an approved qualified special mortar in accordance with Sec 704.

Traffic Handling:

Ramp to remain open during stage 1 construction on Bridge A31362 and to be closed during stage 2 construction on Bridge A31362. See Roadway Plans for Traffic Control.

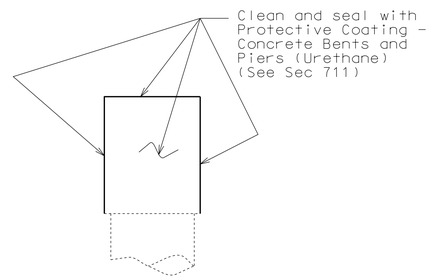

PART END ELEVATION OF
INT. BENT NO. 11 SHOWING
PROTECTIVE COATING

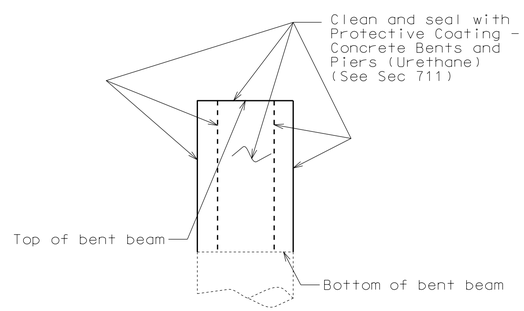

PART END ELEVATION OF
INT. BENT NO. 6 SHOWING
PROTECTIVE COATING

Estimated Quantities

Item		Total
Removal of Existing Expansion Joints & Adjacent Concrete	linear foot	26
Remove and Replace Barrier Curb	linear foot	12
Class B-1 Concrete	cu. yard	5.2
Reinforcing Steel (Epoxy Coated)	pound	1180
Protective Coating - Concrete Bents & Piers (Urethane)	lump sum	1
Strip Seal Expansion Joint System	linear foot	26

REPAIRS TO BRIDGE: RAMP W-E
(WYOMING ST. TO I-670 EB VIADUCT)
OVER VARIOUS STREETS AND BSNF
& KCS RR'S

STATE ROAD FROM I-35 TO STATE LINE
IN KANSAS CITY
STA. 2+44.52± (MATCH EXISTING)

STD. 617.20
STD. 706.35

Detailed Dec. 2013
Checked Dec. 2013

Note: This drawing is not to scale. Follow dimensions.

"THIS MEDIA SHOULD NOT BE CONSIDERED A CERTIFIED DOCUMENT."

DATE PREPARED 12/30/2013
ROUTE I-670 STATE MO
DISTRICT BR SHEET NO. 1
COUNTY JACKSON
JOB NO. J4P2191
CONTRACT ID.
PROJECT NO.
BRIDGE NO. A31391

DESCRIPTION | DATE

MISSOURI HIGHWAYS AND TRANSPORTATION COMMISSION
105 WEST CAPITOL
JEFFERSON CITY, MO 65102
1-888-ASK-MODOT (1-888-275-6636)

IF A SEAL IS PRESENT ON THIS SHEET IT HAS BEEN ELECTRONICALLY SEALED AND DATED.

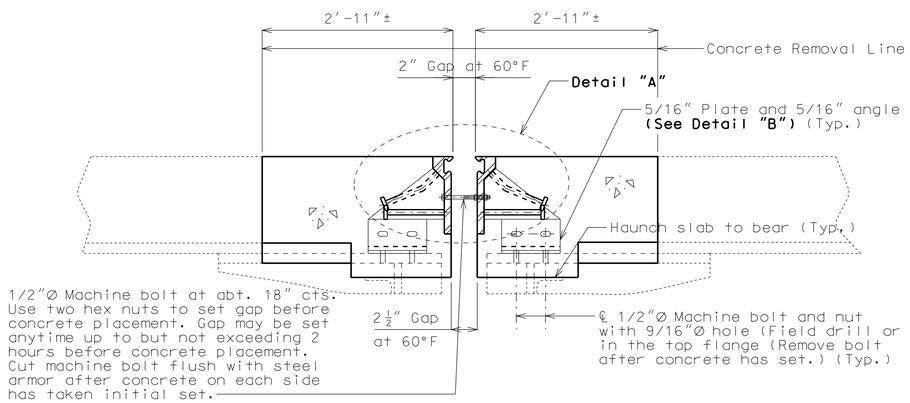

SECTION A-A

Note: Strip seal gland not shown for clarity.

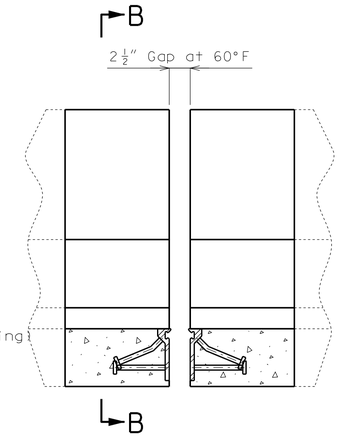

Note: Strip seal gland not shown for clarity.

PART ELEVATION OF BARRIER CURB

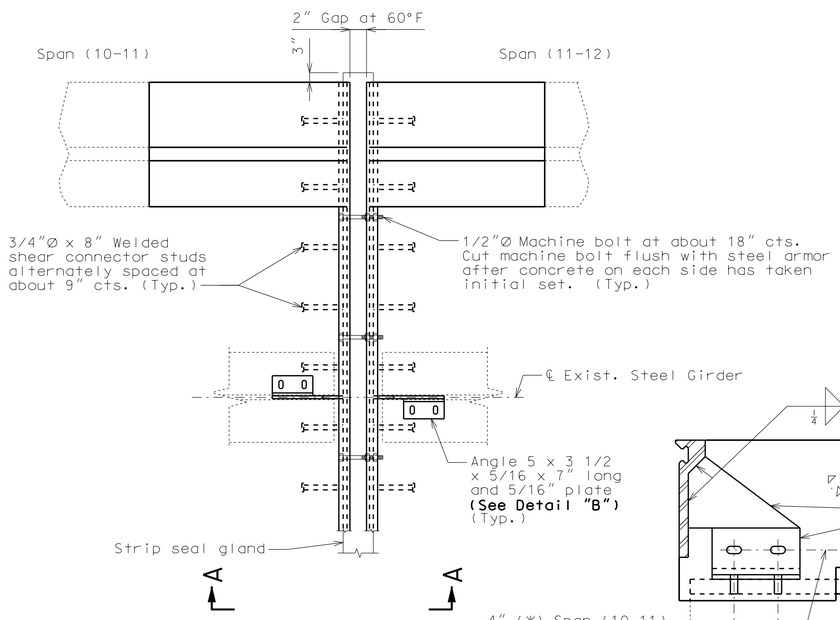

PART PLAN

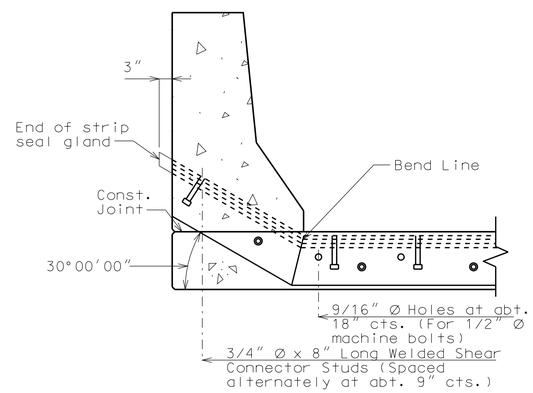

PART SECTION B-B

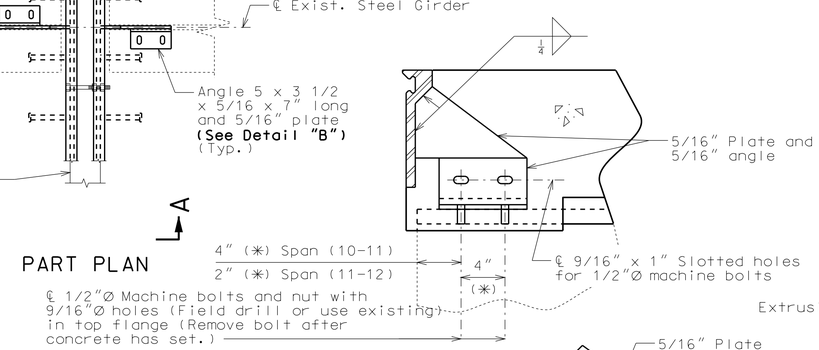

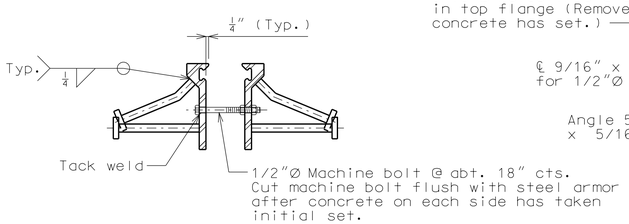

DETAIL "A"

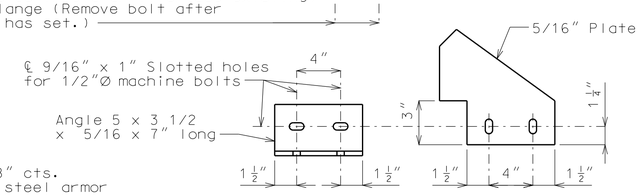

DETAIL "B"

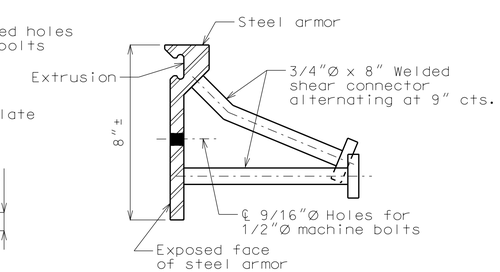

DETAIL OF JOINT ARMOR

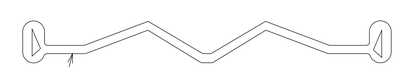

Strip seal gland size = 4"

DETAIL OF GLAND

GENERAL NOTES:

Expansion joint system shall be fabricated in one section, except for stage construction and when the length is over 50 feet. A complete joint penetration groove welded splice shall be required. Welds shall be ground flush to provide a smooth surface. The expansion joint system shall be fabricated and installed to the crown and grade of the roadway.

The strip seal gland shall be installed in joints in one continuous piece without field splices. Factory splicing will be permitted for joints in excess of 53 feet.

Structural steel for the expansion joint system shall be ASTM A709 Grade 36 except the steel armor may be ASTM A709 Grade 50W. Anchors for the expansion joint system shall be in accordance with Sec 1037. Strip seal expansion joint system shall be in accordance with Sec 717.

Structural steel for the expansion joint system shall be coated with a minimum of two coats of inorganic zinc primer (5 mils minimum) or galvanized in accordance with ASTM A123. Anchors need not be protected from overspray.

Plan dimensions are based on installation at 60°F. The expansion gap and other dimensions shall be increased or decreased $\frac{1}{16}$" for each 10° fall or rise in temperature at installation.

New longitudinal reinforcing steel shall be placed and existing longitudinal reinforcing steel shall be cut/bent so that ends shall not be more than ±1" from vertical leg of the steel armor at the expansion joint system.

Concrete shall be forced under and around steel armor and anchors. Proper consolidation of the concrete shall be achieved by localized internal vibration.

(*) Match existing.

"THIS MEDIA SHOULD NOT BE CONSIDERED A CERTIFIED DOCUMENT."

DATE PREPARED	
12/30/2013	
ROUTE	STATE
I-670	MO
DISTRICT	SHEET NO.
BR	2
COUNTY	
JACKSON	
JOB NO.	
J4P2191	
CONTRACT ID.	
PROJECT NO.	
BRIDGE NO.	
A31391	

DATE	DESCRIPTION

IF A SEAL IS PRESENT ON THIS SHEET IT HAS BEEN ELECTRONICALLY SEALED AND DATED.

MISSOURI HIGHWAYS AND TRANSPORTATION COMMISSION

105 WEST CAPITOL
JEFFERSON CITY, MO 65102
1-888-ASK-MODOT (1-888-275-6636)

REV.

DETAILS OF STRIP SEAL AT EXPANSION JOINT NO. 2 NEAR INTERMEDIATE BENT NO. 11

Detailed Dec. 2013
Checked Dec. 2013

Note: This drawing is not to scale. Follow dimensions.

Notes:

Top of safety barrier curb shall be built parallel to grade.

All exposed edges of safety barrier curb shall have either a $\frac{1}{2}$" radius or a $\frac{3}{4}$" bevel, unless otherwise noted.

Concrete in the safety barrier curb replacement shall be Class B-1.

All exposed edges of new safety barrier curb shall match existing safety barrier curb.

Payment for all curb concrete and reinforcing steel, complete-in-place, will be considered completely covered by the contract unit price for Remove and Replace Barrier Curb.

All existing longitudinal reinforcement in the safety barrier curb shall be cleaned and reused.

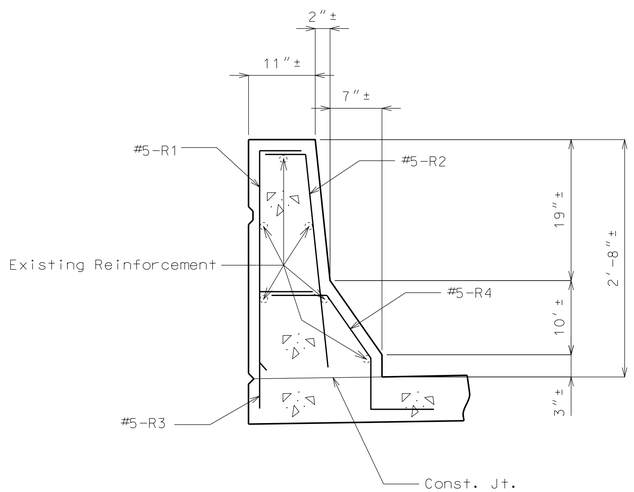

PART SECTION A-A

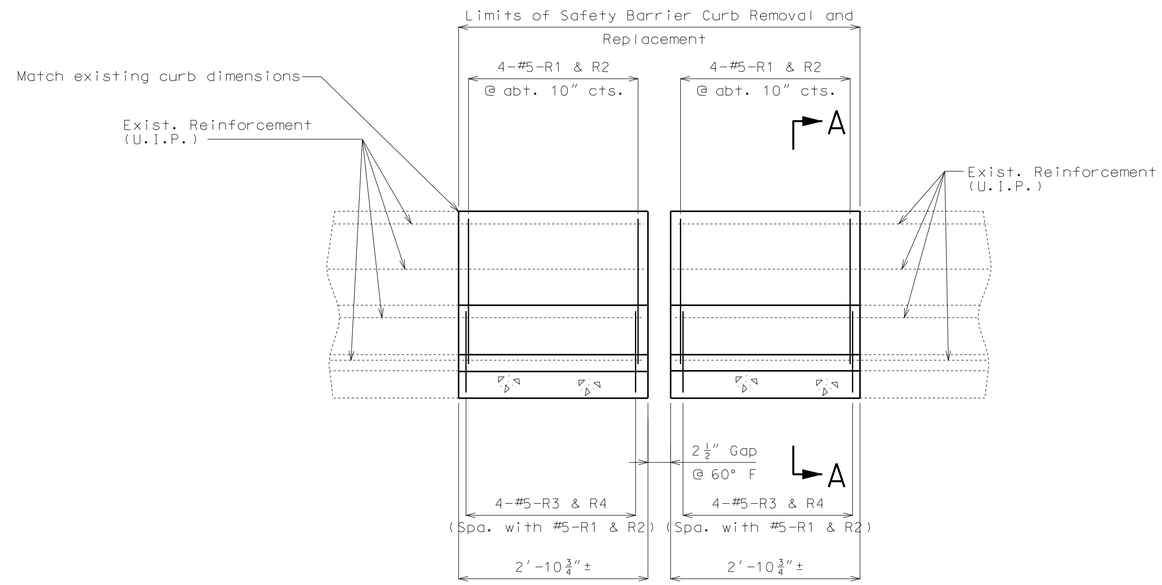

PART ELEVATION SHOWING BARRIER CURB REINFORCEMENT

(Left side shown, right side similar)

Note: Expansion device not shown for clarity.

DETAILS OF SAFETY BARRIER CURB AT EXPANSION JOINT NO. 2 NEAR INTERMEDIATE BENT NO. 11

Detailed Dec. 2013
Checked Dec. 2013

Note: This drawing is not to scale. Follow dimensions.

"THIS MEDIA SHOULD NOT BE CONSIDERED A CERTIFIED DOCUMENT."

DATE PREPARED	
12/30/2013	
ROUTE	STATE
I-670	MO
DISTRICT	SHEET NO.
BR	3
COUNTY	
JACKSON	
JOB NO.	
J4P2191	
CONTRACT ID.	
PROJECT NO.	
BRIDGE NO.	
A31391	

DATE	DESCRIPTION

IF A SEAL IS PRESENT ON THIS SHEET IT HAS BEEN ELECTRONICALLY SEALED AND DATED.

MISSOURI HIGHWAYS AND TRANSPORTATION COMMISSION
105 WEST CAPITOL
JEFFERSON CITY, MO 65102
1-888-ASK-MODOT (1-888-275-6636)

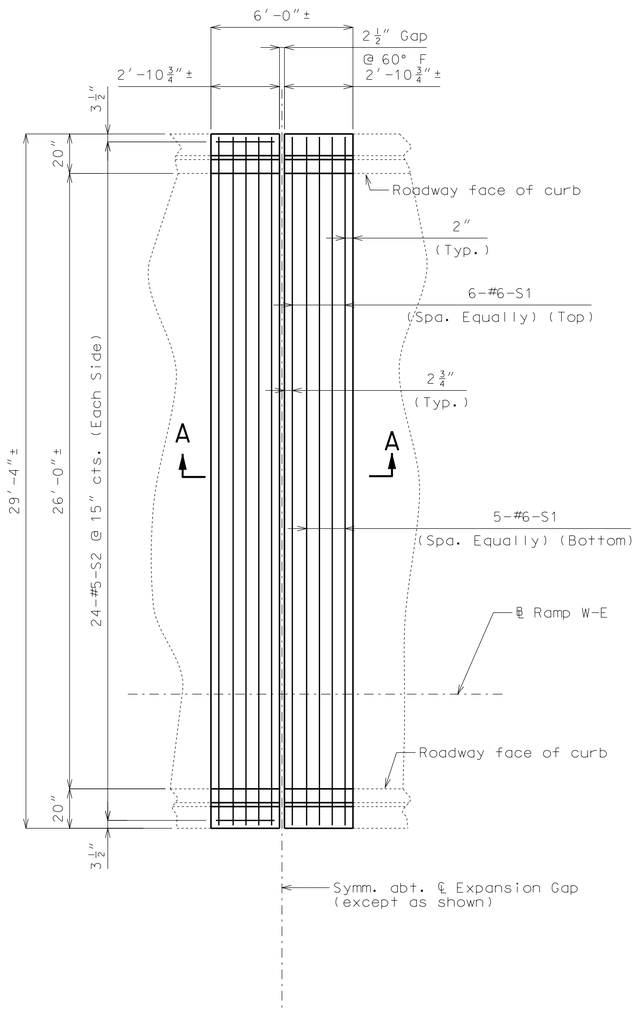

PART PLAN OF SLAB NEAR INT. BENT NO. 11
SHOWING REINFORCEMENT

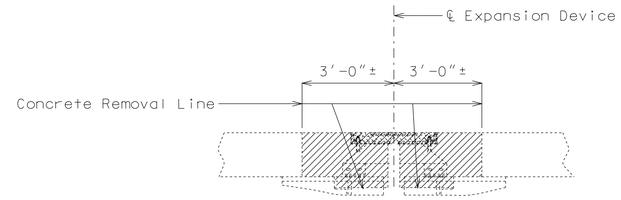

PART SECTION THRU
EXPANSION DEVICE NEAR
INT. BENT NO. 11
SHOWING REMOVAL

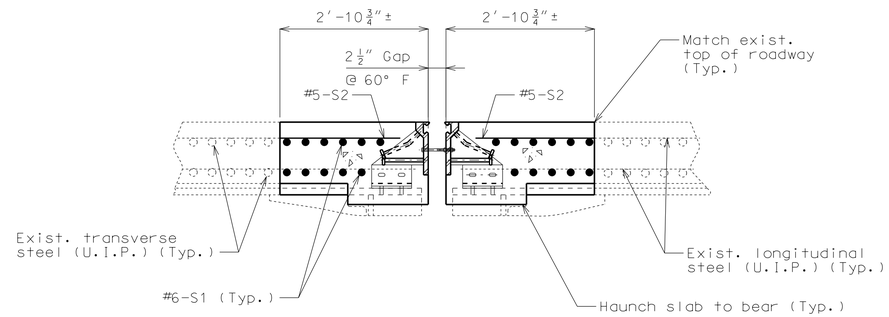

SECTION A-A

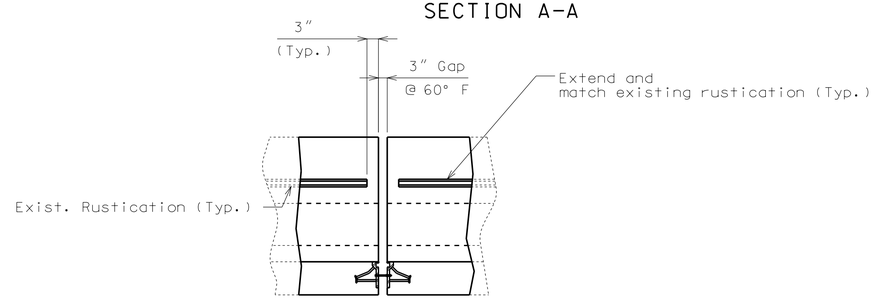

PART ELEVATION SHOWING PARTIAL
SAFETY BARRIER CURB REPLACEMENT

Note: Strip seal gland not shown for clarity.

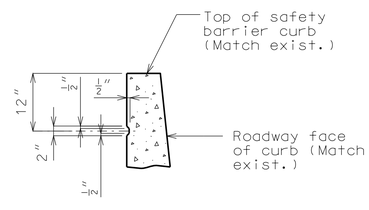

PART SECTION SHOWING
RUSTICATION DETAILS

Notes:

All exposed edges of new barrier curb shall match existing barrier curb.

Shift S-bars where necessary to clear the expansion device.

Work this sheet with Sheets No. 2 and 3.

DETAILS OF SLAB AND SAFETY BARRIER CURB AT EXPANSION JOINT NO. 2 NEAR INTERMEDIATE BENT NO. 11

Detailed Dec. 2013
Checked Dec. 2013

Note: This drawing is not to scale. Follow dimensions.

"THIS MEDIA SHOULD NOT BE CONSIDERED A CERTIFIED DOCUMENT."

DATE PREPARED	12/30/2013
ROUTE	I-670
STATE	MO
DISTRICT	BR
SHEET NO.	4
COUNTY	JACKSON
JOB NO.	J4P2191
CONTRACT ID.	
PROJECT NO.	
BRIDGE NO.	A31391

DATE	DESCRIPTION

MISSOURI HIGHWAYS AND TRANSPORTATION COMMISSION

105 WEST CAPITOL
JEFFERSON CITY, MO 65102
1-888-ASK-MODOT (1-888-275-6636)

IF A SEAL IS PRESENT ON THIS SHEET IT HAS BEEN ELECTRONICALLY SEALED AND DATED.

BILL OF REINFORCING STEEL

NO. REQ'D.	MARK NO. SIZE	MARK NO. MARK	LOCATION	EPOXY (E)	SHAPE NO.	STIRRUP (S)	SUBSTR. (X)	VARIES (V)	NO. EACH	B FT. IN.	C FT. IN.	D FT. IN.	E FT. IN.	F FT. IN.	H FT. IN.	K FT. IN.	NOMINAL LENGTH FT. IN.	ACTUAL LENGTH FT. IN.	WEIGHT LBS.
			SLAB																
24	6	S1	SLAB	E	20					29 1.000							29 1	29 1	1048
48	5	S2	SLAB	E	20					2 8.000							2 8	2 8	134
			BARRIER CURB																
16	5	R1	BARRIER CURB	E	19	S				2 6.000	6.000						3 0	2 11	49
16	5	R2	BARRIER CURB	E	15	S				2 6.125	6.000				2 6.000	3.000	3 0	2 11	49
16	5	R3	BARRIER CURB	E	19	S				17.000	9.000						2 2	2 1	35
16	5	R4	BARRIER CURB	E	27	S					9.000	11.125	7.000	12.000	9.125	6.375	3 3	3 1	51
			TOTALS																
	5			E															318
	6			E															1048
			TOTAL																0
			TOTAL	E															1366
			Slab on Girder																
	5			E															134
	6			E															1048
			TOTAL																1182
			Safety Barrier Curb																
	5			E															184
			TOTAL																184

BILL OF REINFORCING STEEL

NO. REQ'D.	MARK NO. SIZE	MARK NO. MARK	LOCATION	EPOXY (E)	SHAPE NO.	STIRRUP (S)	SUBSTR. (X)	VARIES (V)	NO. EACH	B FT. IN.	C FT. IN.	D FT. IN.	E FT. IN.	F FT. IN.	H FT. IN.	K FT. IN.	NOMINAL LENGTH FT. IN.	ACTUAL LENGTH FT. IN.	WEIGHT LBS.

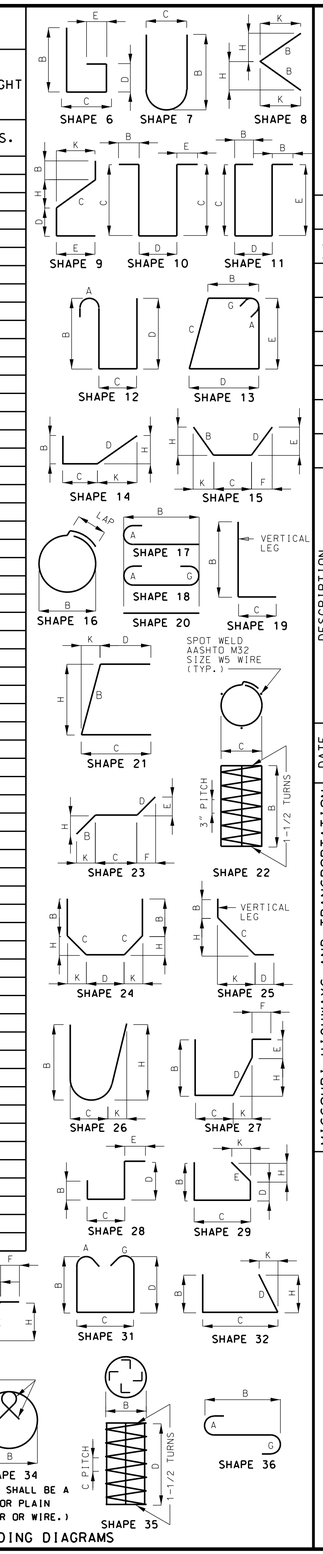

BENDING DIAGRAMS

"THIS MEDIA SHOULD NOT BE CONSIDERED A CERTIFIED DOCUMENT."

DATE PREPARED	12/30/2013
ROUTE	I-670
STATE	MO
DISTRICT	BR
SHEET NO.	5
COUNTY	JACKSON
JOB NO.	J4P2191
CONTRACT ID.	
PROJECT NO.	
BRIDGE NO.	A31391

DATE	DESCRIPTION

MISSOURI HIGHWAYS AND TRANSPORTATION COMMISSION

105 WEST CAPITOL
JEFFERSON CITY, MO 65102
1-888-ASK-MODOT (1-888-275-6636)

IF A SEAL IS PRESENT ON THIS SHEET IT HAS BEEN ELECTRONICALLY SEALED AND DATED.

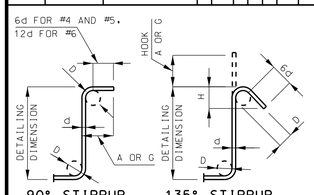

STIRRUP HOOK DIMENSIONS				
GRADES 40 - 50 - 60 KSI				
BAR SIZE	D (IN.)	90° HOOK	135° HOOK	
		HOOK A OR G	HOOK A OR G	APPROX. H
#4	2"	4 1/2"	4 1/2"	3"
#5	2 1/2"	6"	5 1/2"	3 3/4"
#6	4 1/2"	12"	8"	4 1/2"

NOTE: UNLESS OTHERWISE NOTED DIAMETER "D" IS THE SAME FOR ALL BENDS AND HOOKS ON A BAR.

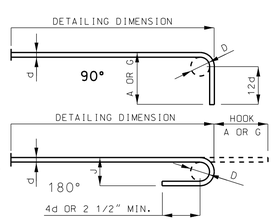

END HOOK DIMENSIONS				
BAR SIZE	D (IN.)	ALL GRADES		
		180° HOOKS		90° HOOKS
		A OR G	J	A OR G
#3	2 1/4"	5"	3"	6"
#4	3"	6"	4"	8"
#5	3 3/4"	7"	5"	10"
#6	4 1/2"	8"	6"	12"
#7	5 1/4"	10"	7"	14"
#8	6"	11"	8"	16"
#9	9 1/2"	15"	11 3/4"	19"
#10	10 3/4"	17"	13 1/4"	22"
#11	12"	19"	14 3/4"	2'-0"
#14	18 1/4"	2'-3"	21 3/4"	2'-7"

TWO ADDITIONAL #6-S1 ARE INCLUDED IN THE BAR BILL FOR TESTING.

NOTE:
ALL STANDARD HOOKS AND BENDS OTHER THAN 180 DEGREE ARE TO BE BENT WITH SAME PROCEDURE AS FOR 90 DEGREE STANDARD HOOKS.
HOOKS AND BENDS SHALL BE IN ACCORDANCE WITH THE PROCEDURES AS SHOWN ON THIS SHEET.
E = EPOXY COATED REINFORCEMENT.
S = STIRRUP.
X = BAR IS INCLUDED IN SUBSTRUCTURE QUANTITIES.
V = BAR DIMENSIONS VARY IN EQUAL INCREMENTS BETWEEN DIMENSIONS SHOWN ON THIS LINE AND THE FOLLOWING LINE.
NO. EA. = NUMBER OF BARS OF EACH LENGTH.
NOMINAL LENGTHS ARE BASED ON OUT TO OUT DIMENSIONS SHOWN IN BENDING DIAGRAMS AND ARE LISTED FOR FABRICATORS USE. (NEAREST INCH)
ACTUAL LENGTHS ARE MEASURED ALONG CENTERLINE BAR TO THE NEAREST INCH.
PAYWEIGHTS ARE BASED ON ACTUAL LENGTHS.
FOUR ANGLE OR CHANNEL SPACERS ARE REQUIRED FOR EACH COLUMN SPIRAL. SPACERS ARE TO BE PLACED ON INSIDE OF SPIRALS. LENGTH AND WEIGHT OF COLUMN SPIRALS DO NOT INCLUDE SPLICES OR SPACERS.
REINFORCING STEEL (GRADE 60) FY = 60,000 PSI.

Detailed Dec. 2013
Checked Dec. 2013

Note: This drawing is not to scale. Follow dimensions.

MISSOURI HIGHWAYS AND TRANSPORTATION COMMISSION

U.I.P. AND REHABILITATE EXISTING (111.5'-153'-142'-6')
(94'-76'-4') CONTINUOUS COMPOSITE PLATE GIRDER SPANS, (49'-61'-61'-39')
CONTINUOUS CONCRETE VOIDED SLAB SPANS

SEC/SUR 6 TWP 49N RGE 33W

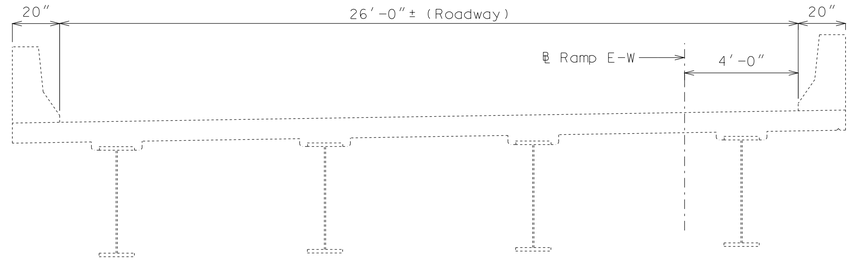

TYPICAL SECTION THRU SLAB

Continuous composite plate girder spans

GENERAL NOTES:

Design Specifications:

2002 - AASHTO LFD (17th Edition) Standard Specifications
Bridge Deck Rating = 7

Design Loading:

HS20-44 (1979 & New Construction)
Military 24,000# Tandem Axle

Design Unit Stresses:

Class B-1 Concrete (Slab & Safety Barrier Curb) f'c = 4,000 psi

Reinforcing Steel (Grade 60) fy = 60,000 psi

Reinforcing Steel:

Minimum clearance to reinforcing steel shall be 1½", unless otherwise shown.

Expansion Joints:

The concrete for slab and barrier curb replacement shall be Class B-1.

Payment for slab concrete, complete-in-place, for expansion joint replacement will be considered completely covered by the contract unit price for Class B-1 concrete per cu. yard.

Payment for furnishing and installing slab reinforcing steel, complete-in-place, for expansion joint replacement will be considered completely covered by the contract unit price for Reinforcing Steel (Epoxy Coated).

Concrete Protective Coatings:

Protective coating for concrete bents and piers (Urethane) shall be applied as shown on the bridge plans and in accordance with Sec 711.

Miscellaneous:

Bars bonded in old concrete not removed shall be cleanly stripped and embedded into new concrete where possible. If length is available, old bars shall extend into new concrete at least 40 diameters for smooth bars and 30 diameters for deformed bars, unless otherwise noted.

Outline of old work is indicated by light dashed lines. Heavy lines indicate new work.

Contractor shall verify all dimensions in field before ordering new material.

The area exposed by the removal of concrete and not covered with new concrete shall be coated with an approved qualified special mortar in accordance with Sec 704.

Traffic Handling:

Ramp to remain open during stage 1 construction on Bridge A31361 and to be closed during stage 2 construction on Bridge A31361. See Roadway Plans for Traffic Control.

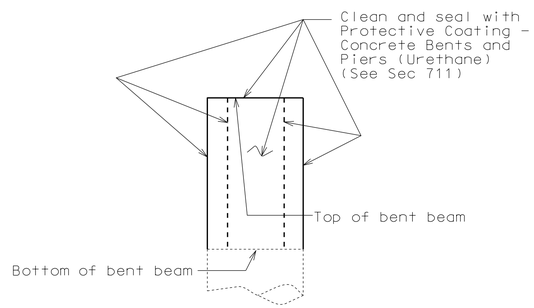

PART END ELEVATION OF
INT. BENTS NO. 3 & 5 SHOWING
PROTECTIVE COATING

Estimated Quantities

Item		Total
Removal of Existing Expansion Joints & Adjacent Concrete	linear foot	80
Remove and Replace Barrier Curb	linear foot	32
Class B-1 Concrete	cu. yard	8.7
Reinforcing Steel (Epoxy Coated)	pound	960
Protective Coating - Concrete Bents & Piers (Urethane)	lump sum	1
Strip Seal Expansion Joint System	linear foot	80

REPAIRS TO BRIDGE: RAMP E-W
(I-670 WB VIADUCT TO WYOMING ST.)
OVER BNSF RR AND VARIOUS STREETS

STATE ROAD FROM I-35 TO STATE LINE
IN KANSAS CITY
STA. 10+16.75± (MATCH EXISTING)

STD. 706.35

"THIS MEDIA SHOULD NOT BE CONSIDERED A CERTIFIED DOCUMENT."

DATE PREPARED 1/2/2014
ROUTE I-670 STATE MO
DISTRICT BR SHEET NO. 1
COUNTY JACKSON
JOB NO. J4P2191
CONTRACT ID.
PROJECT NO.
BRIDGE NO. A31401

DESCRIPTION | DATE

MISSOURI HIGHWAYS AND TRANSPORTATION COMMISSION
105 WEST CAPITOL
JEFFERSON CITY, MO 65102
1-888-ASK-MODOT (1-888-275-6636)

IF A SEAL IS PRESENT ON THIS SHEET IT HAS BEEN ELECTRONICALLY SEALED AND DATED.

Detailed Dec. 2013
Checked Dec. 2013

Note: This drawing is not to scale. Follow dimensions.

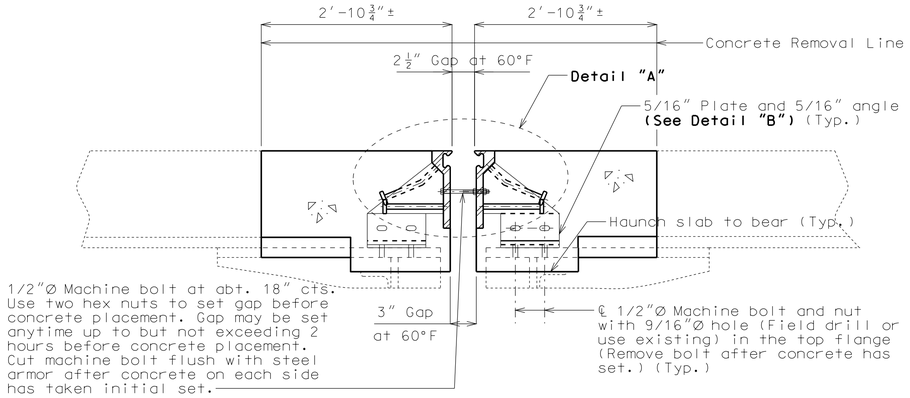

SECTION A-A

Note: Strip seal gland not shown for clarity.

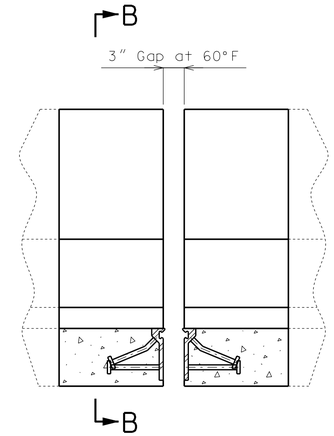

Note: Strip seal gland not shown for clarity.

PART ELEVATION OF BARRIER CURB

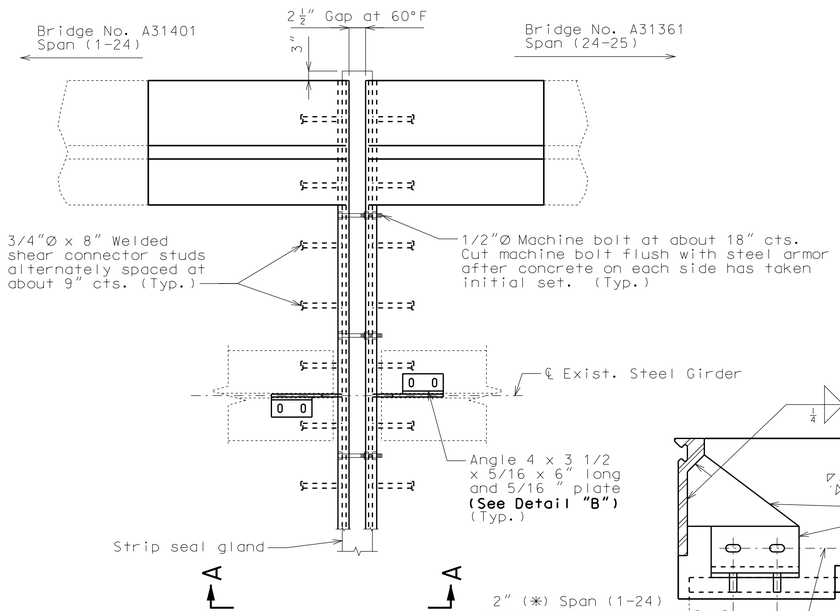

PART PLAN

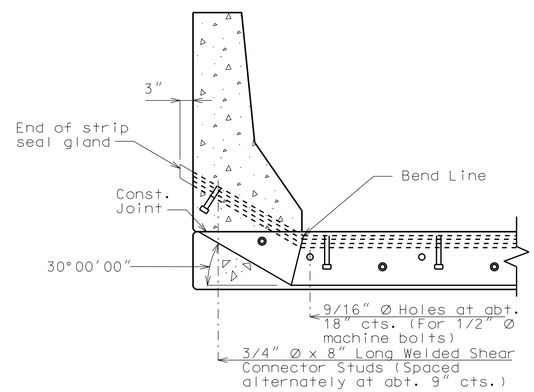

PART SECTION B-B

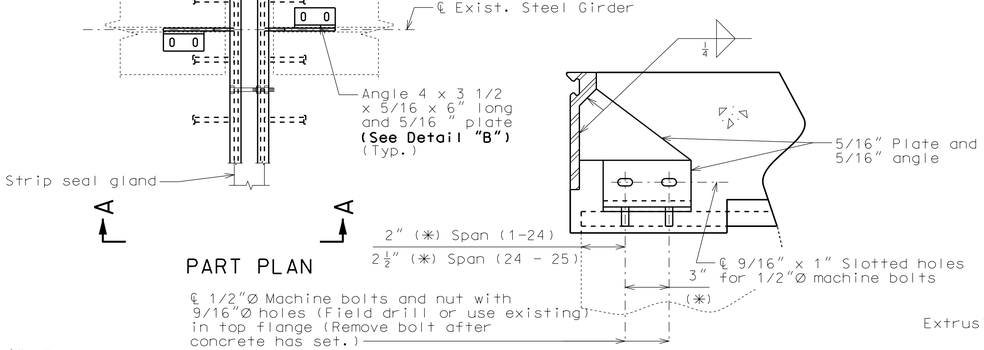

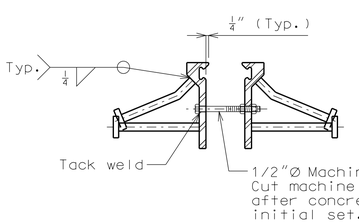

DETAIL "A"

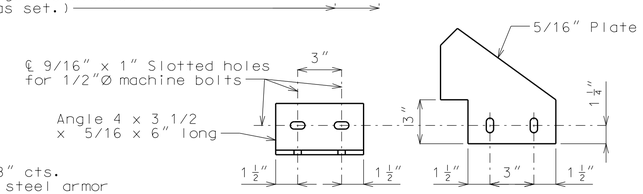

DETAIL "B"

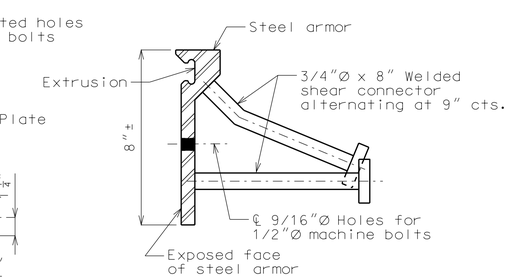

DETAIL OF JOINT ARMOR

DETAIL OF GLAND

GENERAL NOTES:

Expansion joint system shall be fabricated in one section, except for stage construction and when the length is over 50 feet. A complete joint penetration groove welded splice shall be required. Welds shall be ground flush to provide a smooth surface. The expansion joint system shall be fabricated and installed to the crown and grade of the roadway.

The strip seal gland shall be installed in joints in one continuous piece without field splices. Factory splicing will be permitted for joints in excess of 53 feet.

Structural steel for the expansion joint system shall be ASTM A709 Grade 36 except the steel armor may be ASTM A709 Grade 50W. Anchors for the expansion joint system shall be in accordance with Sec 1037. Strip seal expansion joint system shall be in accordance with Sec 717.

Structural steel for the expansion joint system shall be coated with a minimum of two coats of inorganic zinc primer (5 mils minimum) or galvanized in accordance with ASTM A123. Anchors need not be protected from overspray.

Plan dimensions are based on installation at 60°F. The expansion gap and other dimensions shall be increased or decreased ¼" for each 10° fall or rise in temperature at installation.

New longitudinal reinforcing steel shall be placed and existing longitudinal reinforcing steel shall be cut/bent so that ends shall not be more than ±1" from vertical leg of the steel armor at the expansion joint system.

Concrete shall be forced under and around steel armor and anchors. Proper consolidation of the concrete shall be achieved by localized internal vibration.

(*) Match existing.

"THIS MEDIA SHOULD NOT BE CONSIDERED A CERTIFIED DOCUMENT."

DATE PREPARED	
1/2/2014	
ROUTE	STATE
I-670	MO
DISTRICT	SHEET NO.
BR	2
COUNTY	
JACKSON	
JOB NO.	
J4P2191	
CONTRACT ID.	
PROJECT NO.	
BRIDGE NO.	
A31401/A31361	

DATE	DESCRIPTION

MISSOURI HIGHWAYS AND TRANSPORTATION COMMISSION
105 WEST CAPITOL
JEFFERSON CITY, MO 65102
1-888-ASK-MODOT (1-888-275-6636)

IF A SEAL IS PRESENT ON THIS SHEET IT HAS BEEN ELECTRONICALLY SEALED AND DATED.

REV.

DETAILS OF STRIP SEAL AT EXPANSION JOINT NO. 1 NEAR INTERMEDIATE BENT NO. 24

Detailed Dec. 2013
Checked Dec. 2013

Note: This drawing is not to scale. Follow dimensions.

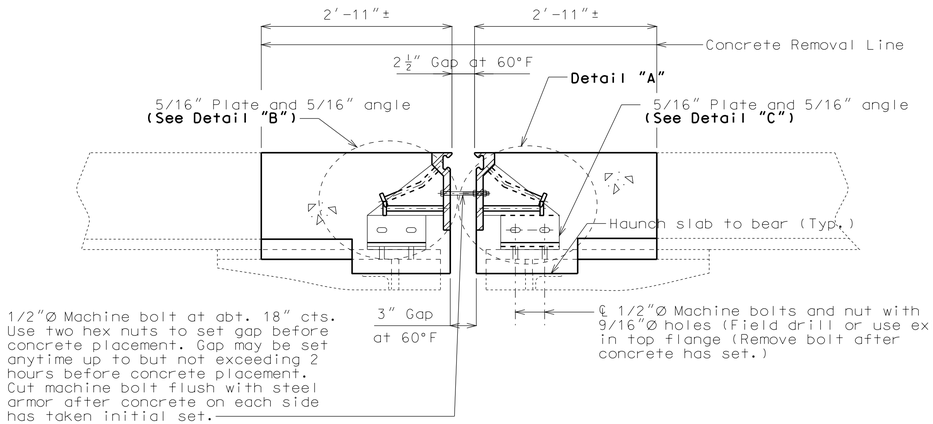

SECTION A-A

Note: Strip seal gland not shown for clarity.

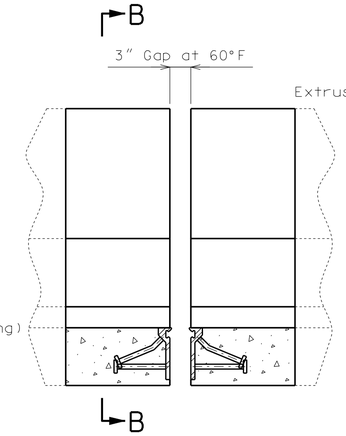

Note: Strip seal gland not shown for clarity.

PART ELEVATION OF BARRIER CURB

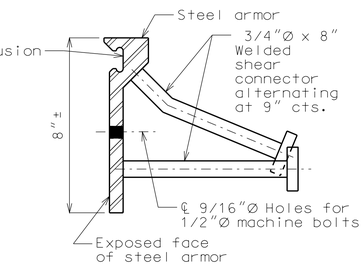

DETAIL OF JOINT ARMOR

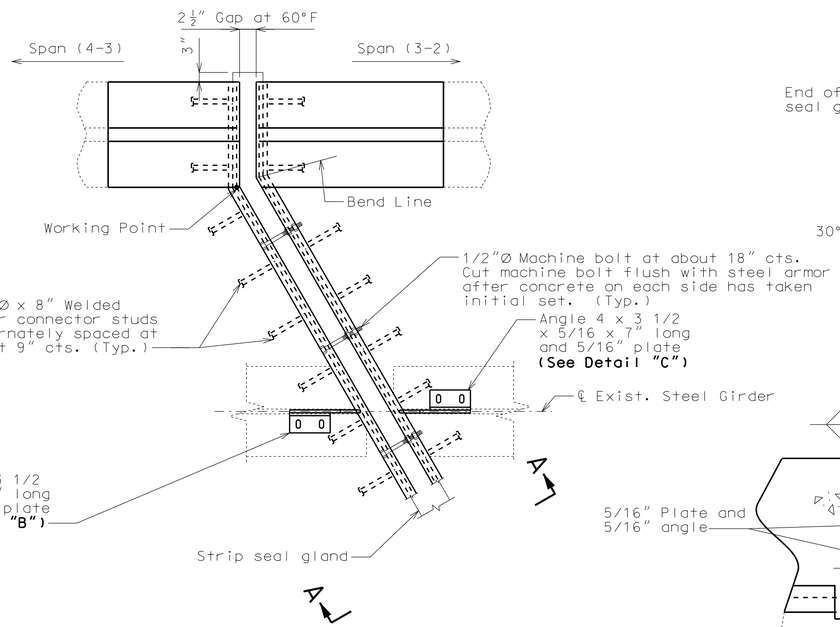

PART PLAN

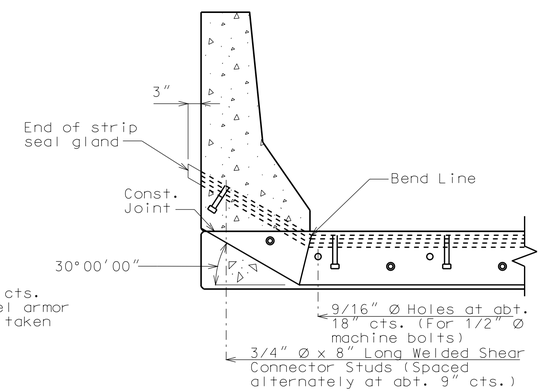

PART SECTION B-B

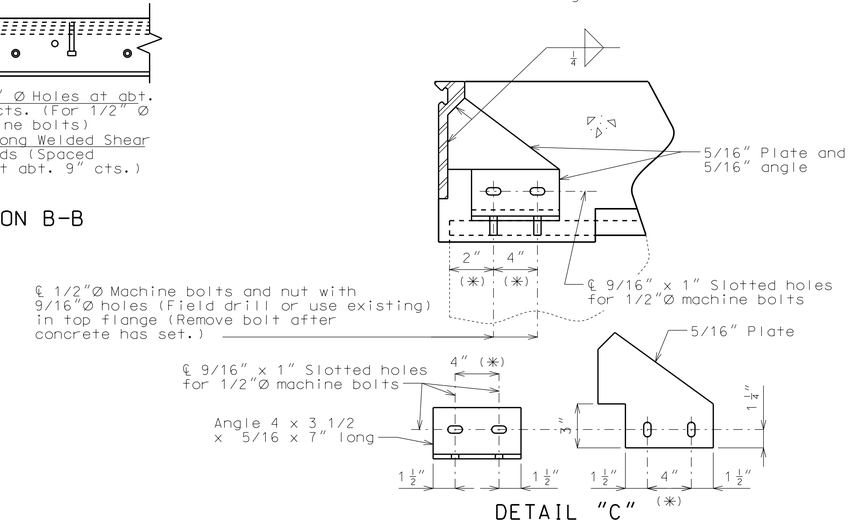

DETAIL "C"

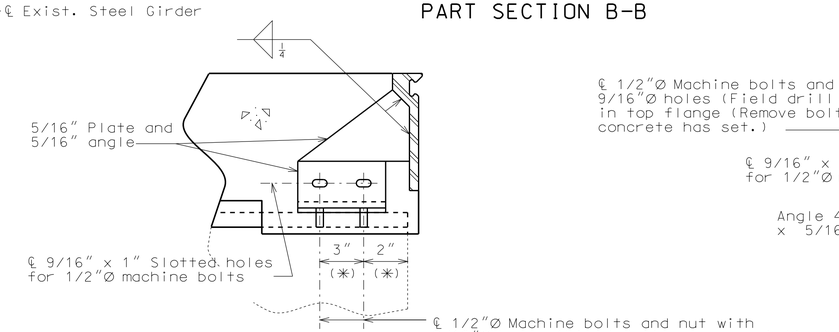

DETAIL "B"

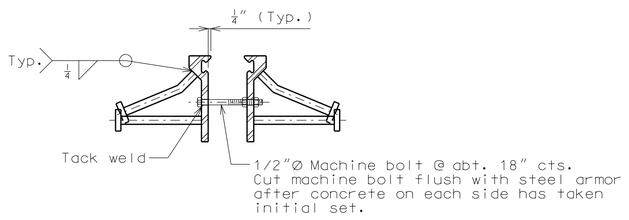

DETAIL OF GLAND

GENERAL NOTES:

Expansion joint system shall be fabricated in one section, except for stage construction and when the length is over 50 feet. A complete joint penetration groove welded splice shall be required. Welds shall be ground flush to provide a smooth surface. The expansion joint system shall be fabricated and installed to the crown and grade of the roadway.

The strip seal gland shall be installed in joints in one continuous piece without field splices. Factory splicing will be permitted for joints in excess of 53 feet.

Structural steel for the expansion joint system shall be ASTM A709 Grade 36 except the steel armor may be ASTM A709 Grade 50W. Anchors for the expansion joint system shall be in accordance with Sec 1037. Strip seal expansion joint system shall be in accordance with Sec 717.

Structural steel for the expansion joint system shall be coated with a minimum of two coats of inorganic zinc primer (5 mils minimum) or galvanized in accordance with ASTM A123. Anchors need not be protected from overspray.

Plan dimensions are based on installation at 60°F. The expansion gap and other dimensions shall be increased or decreased ¼" for each 10° fall or rise in temperature at installation.

New longitudinal reinforcing steel shall be placed and existing longitudinal reinforcing steel shall be cut/bent so that ends shall not be more than ±1" from vertical leg of the steel armor at the expansion joint system.

Concrete shall be forced under and around steel armor and anchors. Proper consolidation of the concrete shall be achieved by localized internal vibration.

(*) Match existing.

DETAIL "A" DETAILS OF STRIP SEAL AT EXPANSION JOINT NO. 2 NEAR INTERMEDIATE BENT NO. 3

Detailed Dec. 2013
Checked Dec. 2013

Note: This drawing is not to scale. Follow dimensions.

"THIS MEDIA SHOULD NOT BE CONSIDERED A CERTIFIED DOCUMENT."

DATE PREPARED	1/2/2014
ROUTE	I-670
STATE	MO
DISTRICT	BR
SHEET NO.	3
COUNTY	JACKSON
JOB NO.	J4P2191
CONTRACT ID.	
PROJECT NO.	
BRIDGE NO.	A31401

DESCRIPTION

DATE

MISSOURI HIGHWAYS AND TRANSPORTATION COMMISSION

105 WEST CAPITOL
JEFFERSON CITY, MO 65102
1-888-ASK-MODOT (1-888-275-6636)

IF A SEAL IS PRESENT ON THIS SHEET IT HAS BEEN ELECTRONICALLY SEALED AND DATED.

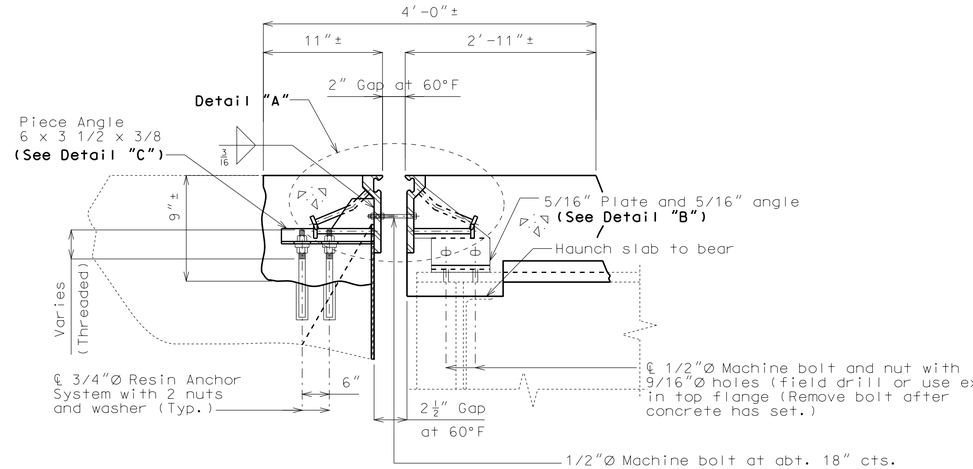

SECTION A-A

Note: Strip seal gland not shown for clarity.

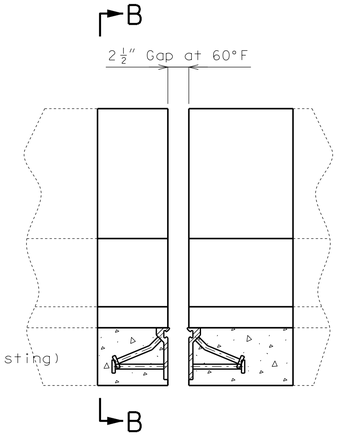

Note: Strip seal gland not shown for clarity.

PART ELEVATION OF BARRIER CURB

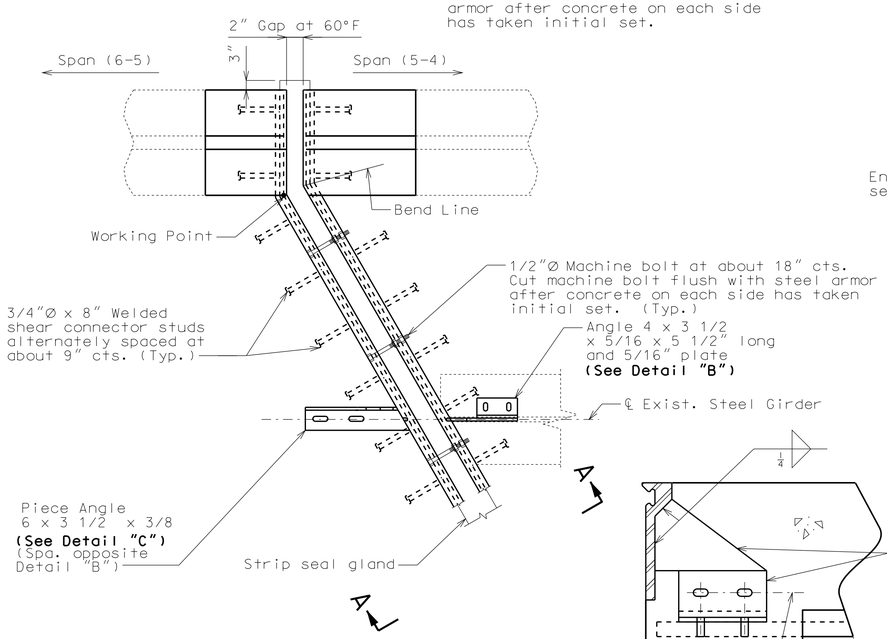

PART PLAN

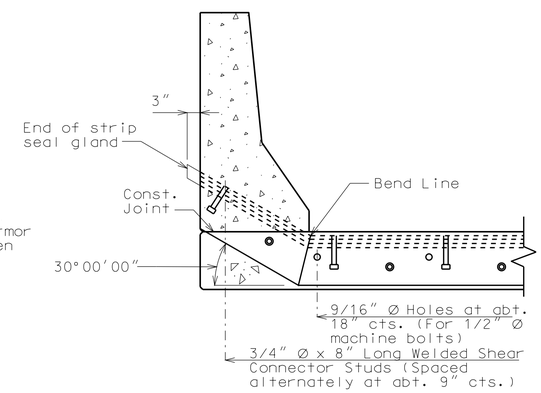

PART SECTION B-B

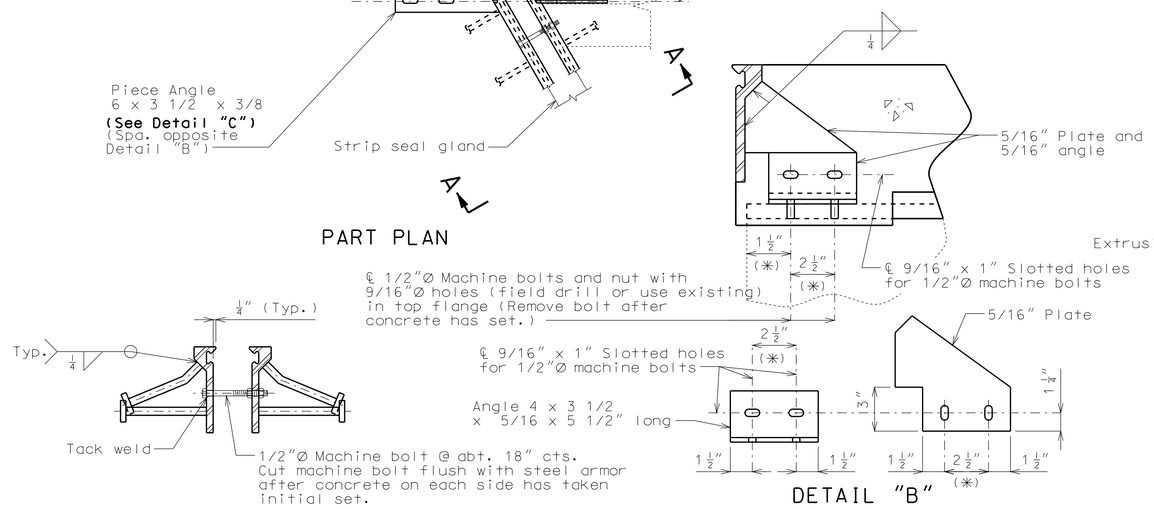

DETAIL "B"

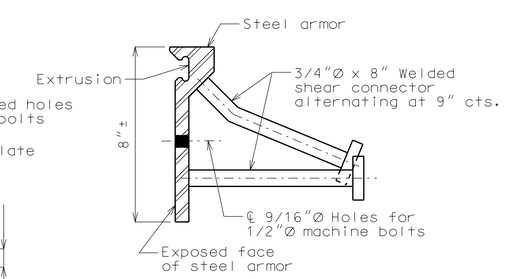

DETAIL OF JOINT ARMOR

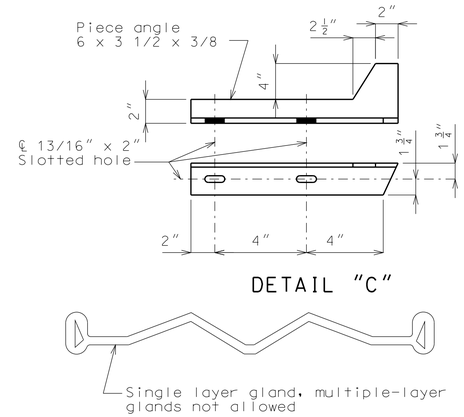

DETAIL "C"

DETAIL OF GLAND

GENERAL NOTES:

Expansion joint system shall be fabricated in one section, except for stage construction and when the length is over 50 feet. A complete joint penetration groove welded splice shall be required. Welds shall be ground flush to provide a smooth surface. The expansion joint system shall be fabricated and installed to the crown and grade of the roadway.

The strip seal gland shall be installed in joints in one continuous piece without field splices. Factory splicing will be permitted for joints in excess of 53 feet.

Structural steel for the expansion joint system shall be ASTM A709 Grade 36 except the steel armor may be ASTM A709 Grade 50W. Anchors for the expansion joint system shall be in accordance with Sec 1037. Strip seal expansion joint system shall be in accordance with Sec 717.

Structural steel for the expansion joint system shall be coated with a minimum of two coats of inorganic zinc primer (5 mils minimum) or galvanized in accordance with ASTM A123. Anchors need not be protected from overspray.

Plan dimensions are based on installation at 60°F. The expansion gap and other dimensions shall be increased or decreased 1/8" for each 10° fall or rise in temperature at installation.

New longitudinal reinforcing steel shall be placed and existing longitudinal reinforcing steel shall be cut/bent so that ends shall not be more than ±1" from vertical leg of the steel armor at the expansion joint system.

Concrete shall be forced under and around steel armor and anchors. Proper consolidation of the concrete shall be achieved by localized internal vibration.

(*) Match existing.

The contractor shall use one of the qualified resin anchor systems in accordance with Sec 1039.

Cost of furnishing and installing the resin anchor system, complete in place, will be considered completely covered by the contract unit price for Strip Seal Expansion Joint System.

The minimum embedment depth in concrete with f'c = 4,000 psi for the resin anchor system shall be that required to meet the minimum ultimate pullout strength in accordance with Sec 1039 but shall not be less than 5".

"THIS MEDIA SHOULD NOT BE CONSIDERED A CERTIFIED DOCUMENT."

DATE PREPARED	
1/2/2014	
ROUTE	STATE
I-670	MO
DISTRICT	SHEET NO.
BR	4
COUNTY	
JACKSON	
JOB NO.	
J4P2191	
CONTRACT ID.	
PROJECT NO.	
BRIDGE NO.	
A31401	

DATE	DESCRIPTION

IF A SEAL IS PRESENT ON THIS SHEET IT HAS BEEN ELECTRONICALLY SEALED AND DATED.

MISSOURI HIGHWAYS AND TRANSPORTATION COMMISSION

105 WEST CAPITOL
JEFFERSON CITY, MO 65102
1-888-ASK-MODOT (1-888-275-6636)

DETAIL "A" DETAILS OF STRIP SEAL AT EXPANSION JOINT NO. 3 NEAR INTERMEDIATE BENT NO. 5

Detailed Dec. 2013
Checked Dec. 2013

Note: This drawing is not to scale. Follow dimensions.

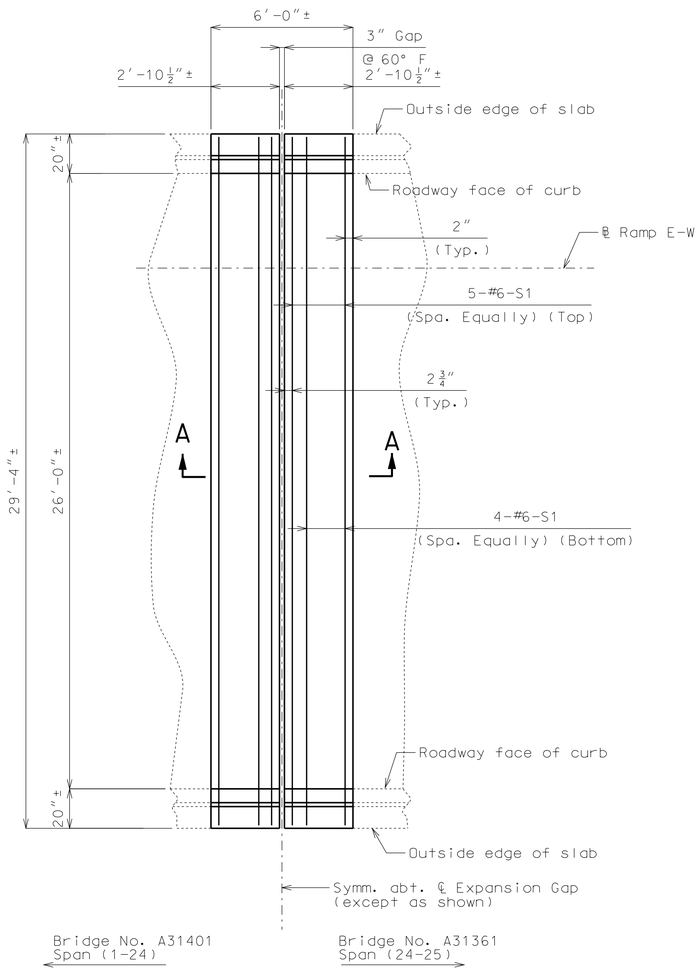

PART PLAN OF SLAB AT EXPANSION JOINT NO. 1
NEAR INT. BENT NO. 24
SHOWING REINFORCEMENT

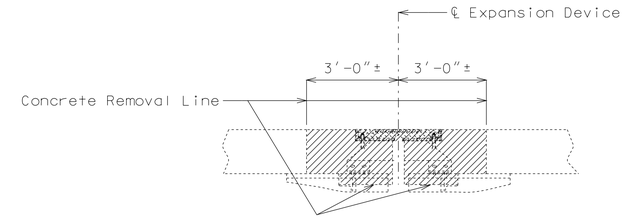

PART SECTION THRU
EXPANSION JOINT NO. 1 NEAR
INT. BENT NO. 24
SHOWING REMOVALS

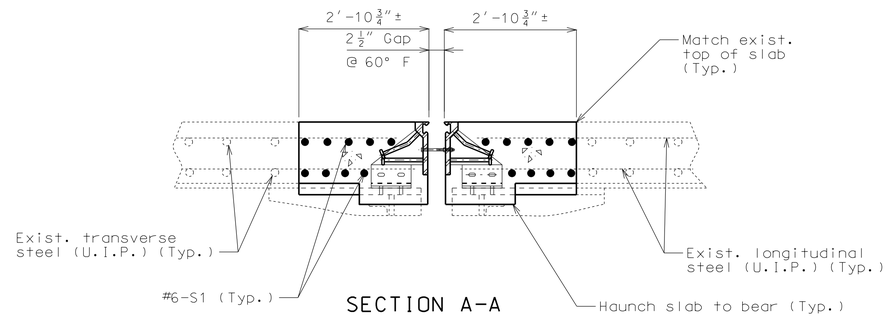

SECTION A-A

Note: Strip seal gland not shown for clarity.

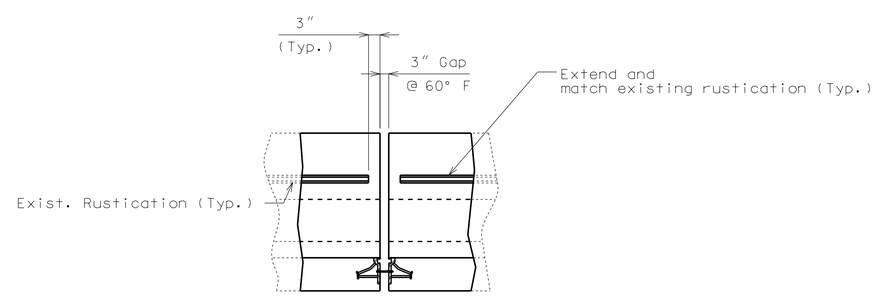

PART ELEVATION SHOWING PARTIAL
SAFETY BARRIER CURB REPLACEMENT

Note: Strip seal gland not shown for clarity.

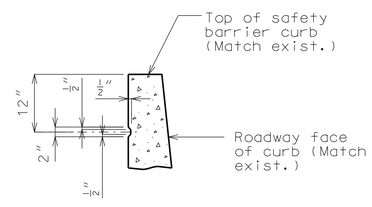

PART SECTION SHOWING
RUSTICATION DETAILS

Note:

Work this sheet with Sheets No. 2 & 8.

DETAILS OF SLAB AND BARRIER CURB AT EXPANSION JOINT NO. 1 NEAR INTERMEDIATE BENT NO. 24

Detailed Dec. 2013
Checked Dec. 2013

Note: This drawing is not to scale. Follow dimensions.

"THIS MEDIA SHOULD NOT BE CONSIDERED A CERTIFIED DOCUMENT."

DATE PREPARED	1/2/2014
ROUTE	I-670
STATE	MO
DISTRICT	BR
SHEET NO.	5
COUNTY	JACKSON
JOB NO.	J4P2191
CONTRACT ID.	
PROJECT NO.	
BRIDGE NO.	A31401/A31361

DATE	DESCRIPTION

MISSOURI HIGHWAYS AND TRANSPORTATION COMMISSION

105 WEST CAPITOL
JEFFERSON CITY, MO 65102
1-888-ASK-MODOT (1-888-275-6636)

IF A SEAL IS PRESENT ON THIS SHEET IT HAS BEEN ELECTRONICALLY SEALED AND DATED.

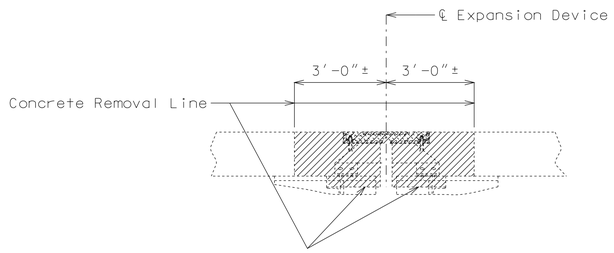

PART SECTION THRU
EXPANSION DEVICE NEAR
INT. BENT NO. 3
SHOWING REMOVALs

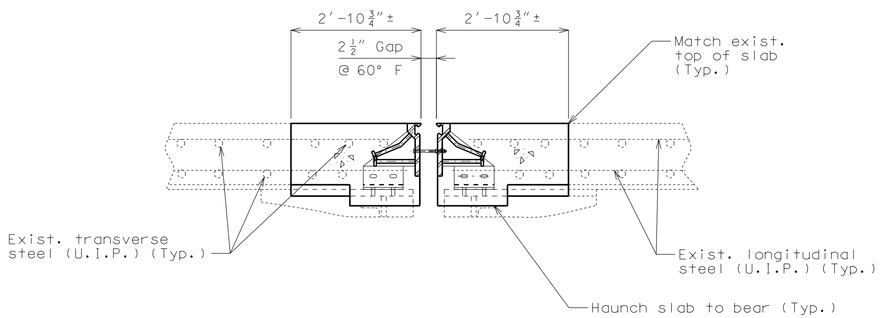

PART SECTION THRU
EXPANSION DEVICE NEAR
INT. BENT NO. 3
SHOWING NEW CONCRETE

Note: Strip seal gland not shown for clarity.

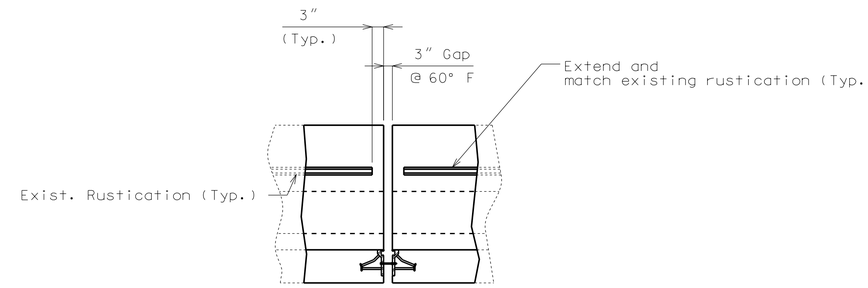

PART ELEVATION SHOWING PARTIAL
SAFETY BARRIER CURB REPLACEMENT

Note: Strip seal gland not shown for clarity.

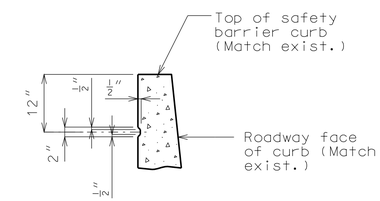

PART SECTION SHOWING
RUSTICATION DETAILS

Note:
Work this sheet with Sheets No. 3 & 8.

DETAILS OF SLAB AND BARRIER CURB AT EXPANSION JOINT NO. 2 NEAR INTERMEDIATE BENT NO. 3

Detailed Dec. 2013
Checked Dec. 2013

Note: This drawing is not to scale. Follow dimensions.

"THIS MEDIA SHOULD NOT BE CONSIDERED A CERTIFIED DOCUMENT."

DATE PREPARED	1/2/2014
ROUTE	I-670
STATE	MO
DISTRICT	BR
SHEET NO.	6
COUNTY	JACKSON
JOB NO.	J4P2191
CONTRACT ID.	
PROJECT NO.	
BRIDGE NO.	A31401

DATE	DESCRIPTION

MISSOURI HIGHWAYS AND TRANSPORTATION COMMISSION

105 WEST CAPITOL
JEFFERSON CITY, MO 65102
1-888-ASK-MODOT (1-888-275-6636)

IF A SEAL IS PRESENT ON THIS SHEET IT HAS BEEN ELECTRONICALLY SEALED AND DATED.

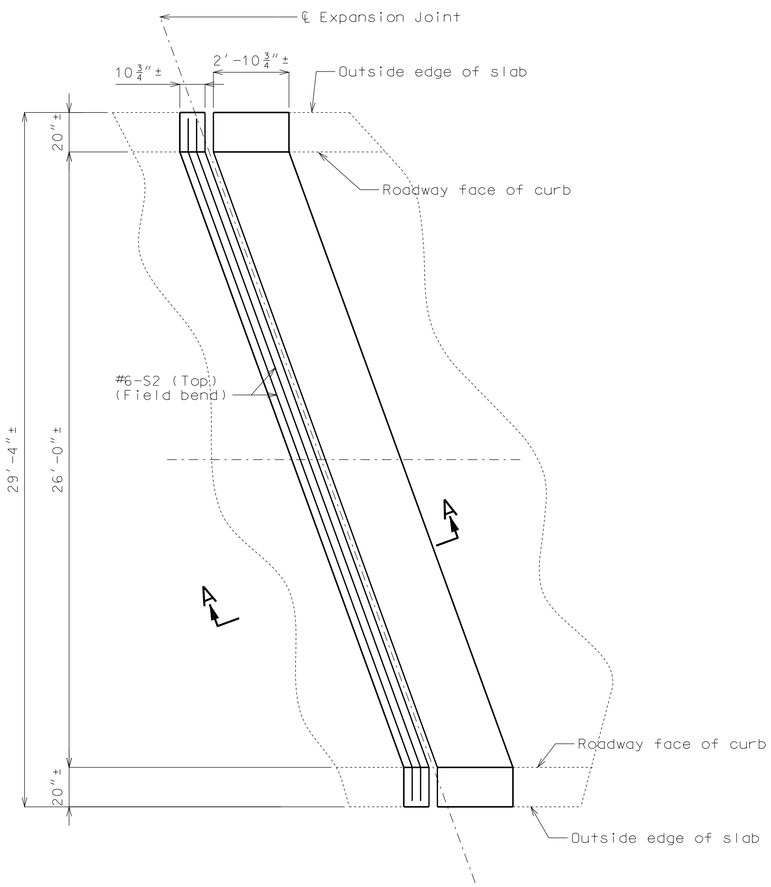

PART PLAN OF SLAB NEAR INTERMEDIATE BENT NO. 5
SHOWING REINFORCEMENT

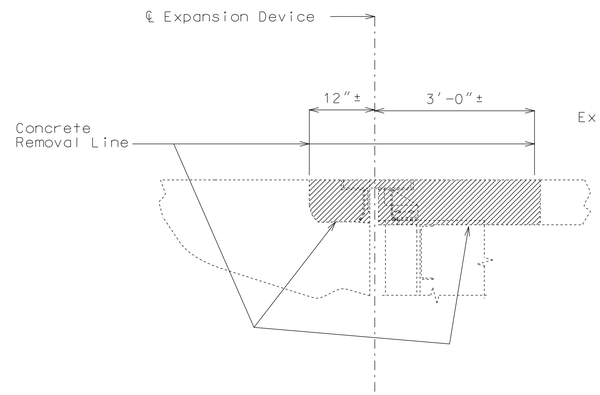

PART SECTION THRU
EXPANSION DEVICE NEAR
INT. BENT NO. 5
SHOWING REMOVALS

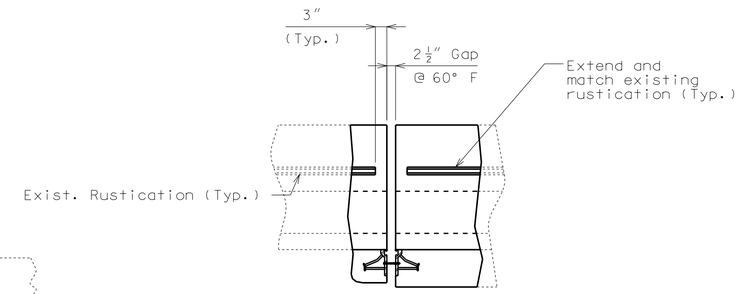

PART ELEVATION SHOWING PARTIAL
SAFETY BARRIER CURB REPLACEMENT

Note: Strip seal gland not shown for clarity.

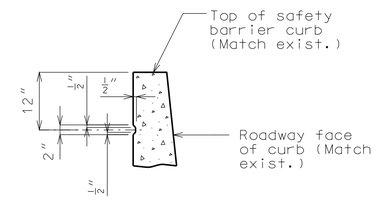

PART SECTION SHOWING
RUSTICATION DETAILS

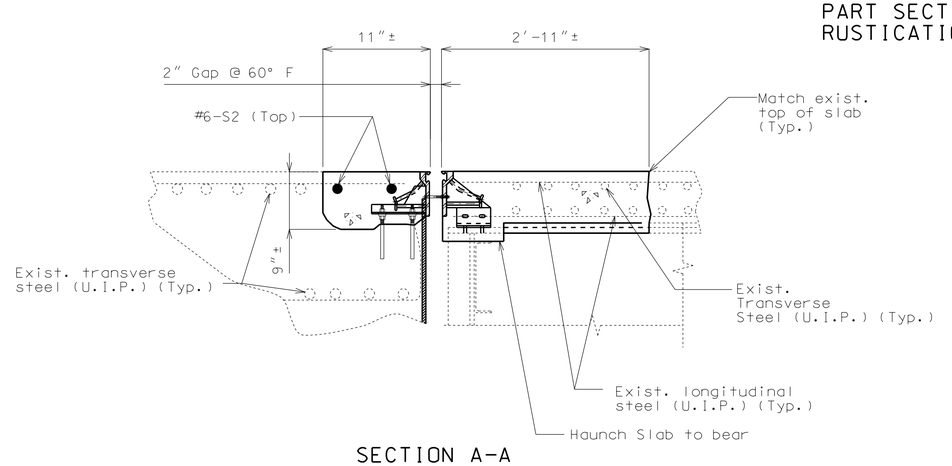

SECTION A-A

Note: Strip seal gland not shown for calrity.

Note:
Work this sheet with Sheets No. 4 & 8.

DETAILS OF SLAB AND BARRIER CURB AT EXPANSION JOINT NO. 3 NEAR INTERMEDIATE BENT NO. 5

Detailed Dec. 2013
Checked Dec. 2013

Note: This drawing is not to scale. Follow dimensions.

"THIS MEDIA SHOULD NOT BE CONSIDERED A CERTIFIED DOCUMENT."

DATE PREPARED	1/2/2014
ROUTE	I-670
STATE	MO
DISTRICT	BR
SHEET NO.	7
COUNTY	JACKSON
JOB NO.	J4P2191
CONTRACT ID.	
PROJECT NO.	
BRIDGE NO.	A31401

DATE	DESCRIPTION

MISSOURI HIGHWAYS AND TRANSPORTATION COMMISSION
105 WEST CAPITOL
JEFFERSON CITY, MO 65102
1-888-ASK-MODOT (1-888-275-6636)

IF A SEAL IS PRESENT ON THIS SHEET IT HAS BEEN ELECTRONICALLY SEALED AND DATED.

Notes:

Top of safety barrier curb shall be built parallel to grade.

All exposed edges of safety barrier curb shall have either a $\frac{1}{2}''$ radius or a $\frac{3}{4}''$ bevel, unless otherwise noted.

Concrete in the safety barrier curb replacement shall be Class B-1.

All exposed edges of new safety barrier curb shall match existing safety barrier curb.

Payment for all curb concrete and reinforcing steel, complete-in-place, will be considered completely covered by the contract unit price for Remove and Replace Barrier Curb.

All existing longitudinal reinforcement in the safety barrier curb shall be cleaned and reused.

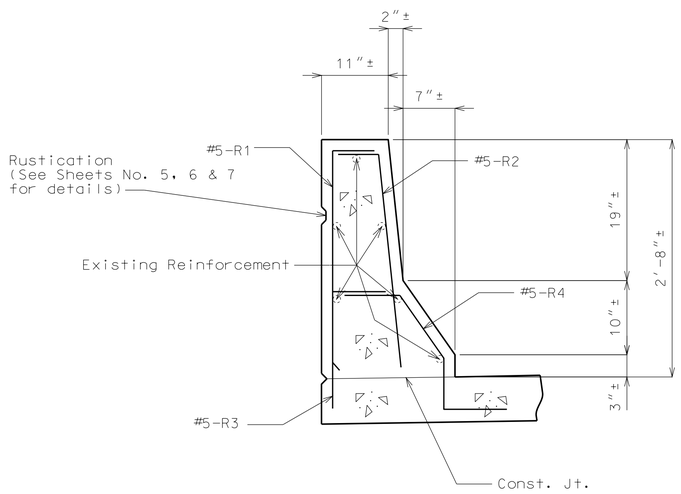

PART SECTION A-A

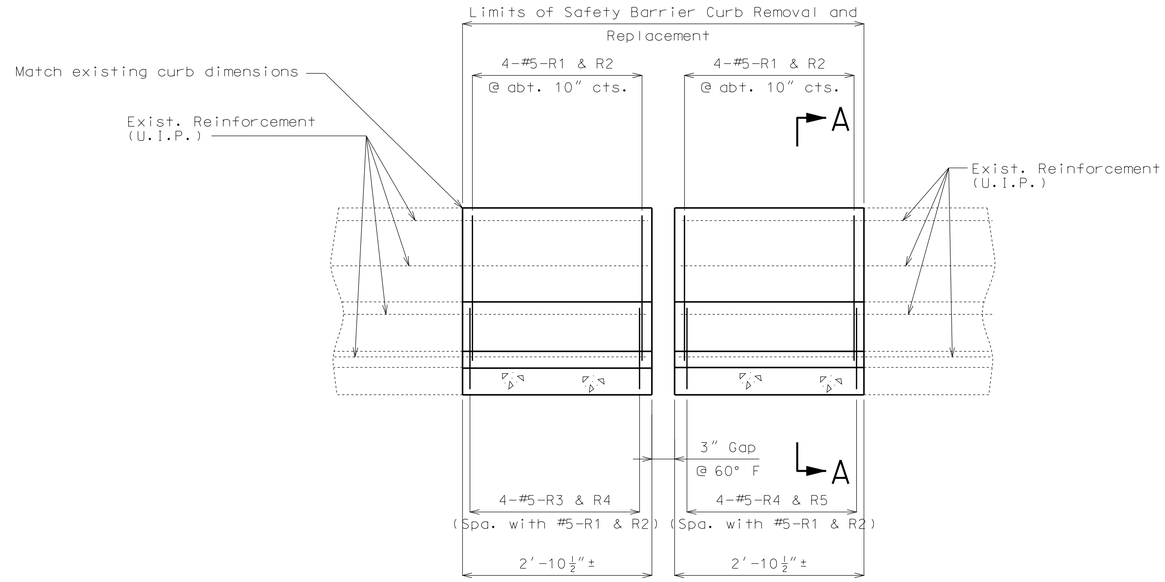

PART ELEVATION NEAR INTERMEDIATE BENTS NO. 3 & 24
SHOWING BARRIER CURB REINFORCEMENT

(Left side shown, right side similar)
Note: Expansion device not shown for clarity.

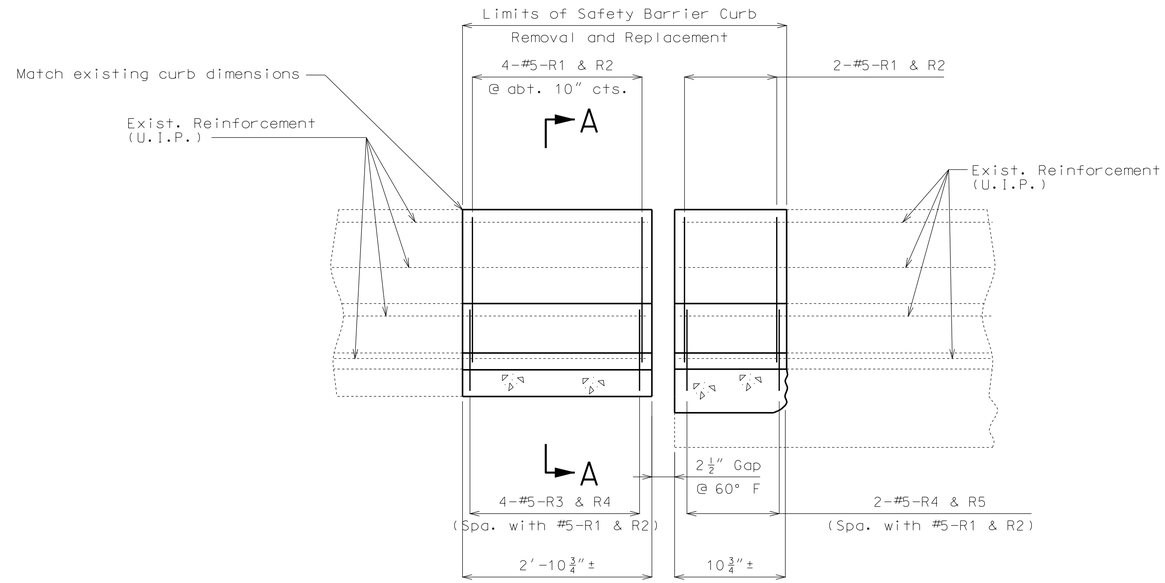

PART ELEVATION NEAR INTERMEDIATE BENT NO. 5
SHOWING BARRIER CURB REINFORCEMENT

(Left side shown, right side similar)
Note: Expansion device not shown for clarity.

Detailed Dec. 2013
Checked Dec. 2013

Note: This drawing is not to scale. Follow dimensions.

"THIS MEDIA SHOULD NOT BE CONSIDERED A CERTIFIED DOCUMENT."

DATE PREPARED	1/2/2014
ROUTE	I-670
STATE	MO
DISTRICT	BR
SHEET NO.	8
COUNTY	JACKSON
JOB NO.	J4P2191
CONTRACT ID.	
PROJECT NO.	
BRIDGE NO.	A31401/A31361

DATE	DESCRIPTION

MISSOURI HIGHWAYS AND TRANSPORTATION COMMISSION

105 WEST CAPITOL
JEFFERSON CITY, MO 65102
1-888-ASK-MODOT (1-888-275-6636)

IF A SEAL IS PRESENT ON THIS SHEET IT HAS BEEN ELECTRONICALLY SEALED AND DATED.

BILL OF REINFORCING STEEL

NO. REQ'D.	MARK NO. SIZE	MARK NO. MARK	LOCATION	EPOXY (E)	SHAPE NO.	STIRRUP (S)	SUBSTR. (X)	VARIES (V)	NO. EACH	B FT. IN.	C FT. IN.	D FT. IN.	E FT. IN.	F FT. IN.	H FT. IN.	K FT. IN.	NOMINAL LENGTH FT. IN.	ACTUAL LENGTH FT. IN.	WEIGHT LBS.
			SLAB																
20	6	S1	SLAB	E	20					29 1.000							29 1	29 1	874
2	6	S2	SLAB	E	20					29 9.000							29 9	29 9	89
			BARRIER CURB																
44	5	R1	BARRIER CURB	E	19	S				2 6.000	6.000						3 0	2 11	134
44	5	R2	BARRIER CURB	E	15	S				2 6.125	6.000				2 6.000	3.000	3 0	2 11	134
44	5	R3	BARRIER CURB	E	19	S				17.000	10.000						2 3	2 2	99
44	5	R4	BARRIER CURB	E	27	S					10.000	11.125	7.000	12.000	9.125	6.375	3 4	3 2	145
			TOTALS																
	5			E															512
	6			E															963
			TOTAL																0
			TOTAL	E															1475
			Slab on Girder																
	6			E															963
			TOTAL																963
			Safety Barrier Curb																
	5			E															512
			TOTAL																512

BILL OF REINFORCING STEEL

NO. REQ'D.	MARK NO. SIZE	MARK NO. MARK	LOCATION	EPOXY (E)	SHAPE NO.	STIRRUP (S)	SUBSTR. (X)	VARIES (V)	NO. EACH	B FT. IN.	C FT. IN.	D FT. IN.	E FT. IN.	F FT. IN.	H FT. IN.	K FT. IN.	NOMINAL LENGTH FT. IN.	ACTUAL LENGTH FT. IN.	WEIGHT LBS.

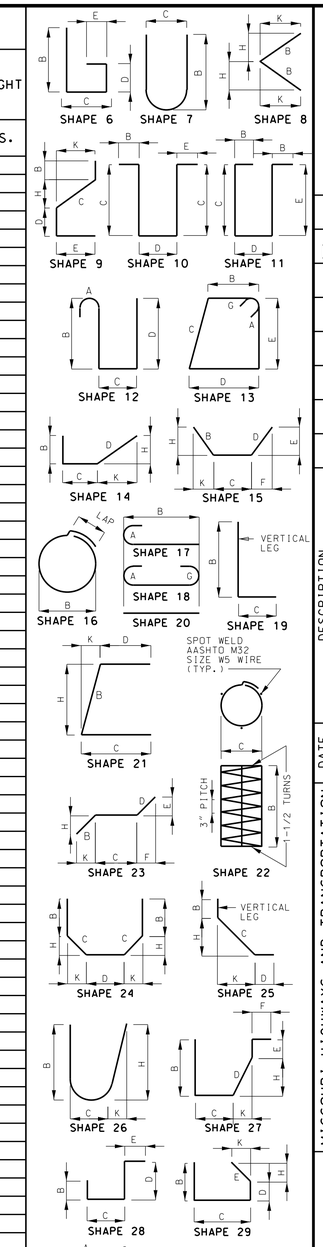

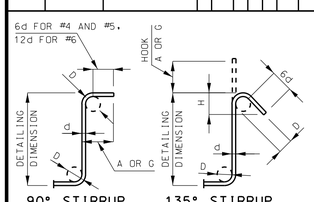

STIRRUP HOOK DIMENSIONS				
GRADES 40 - 50 - 60 KSI				
BAR SIZE	D (IN.)	90° HOOK	135° HOOK	
		HOOK A OR G	HOOK A OR G	APPROX. H
#4	2"	4 1/2"	4 1/2"	3"
#5	2 1/2"	6"	5 1/2"	3 3/4"
#6	4 1/2"	12"	8"	4 1/2"

NOTE: UNLESS OTHERWISE NOTED DIAMETER "D" IS THE SAME FOR ALL BENDS AND HOOKS ON A BAR.

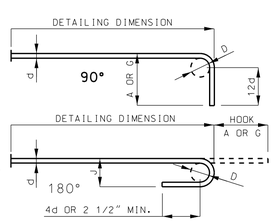

END HOOK DIMENSIONS				
BAR SIZE	D (IN.)	ALL GRADES		
		180° HOOKS		90° HOOKS
		A OR G	J	A OR G
#3	2 1/4"	5"	3"	6"
#4	3"	6"	4"	8"
#5	3 3/4"	7"	5"	10"
#6	4 1/2"	8"	6"	12"
#7	5 1/4"	10"	7"	14"
#8	6"	11"	8"	16"
#9	9 1/2"	15"	11 3/4"	19"
#10	10 3/4"	17"	13 1/4"	22"
#11	12"	19"	14 3/4"	2'-0"
#14	18 1/4"	2'-3"	21 3/4"	2'-7"

TWO ADDITIONAL #6-S1 ARE INCLUDED IN THE BAR BILL FOR TESTING.

NOTE:
ALL STANDARD HOOKS AND BENDS OTHER THAN 180 DEGREE ARE TO BE BENT WITH SAME PROCEDURE AS FOR 90 DEGREE STANDARD HOOKS.
HOOKS AND BENDS SHALL BE IN ACCORDANCE WITH THE PROCEDURES AS SHOWN ON THIS SHEET.
E = EPOXY COATED REINFORCEMENT.
S = STIRRUP.
X = BAR IS INCLUDED IN SUBSTRUCTURE QUANTITIES.
V = BAR DIMENSIONS VARY IN EQUAL INCREMENTS BETWEEN DIMENSIONS SHOWN ON THIS LINE AND THE FOLLOWING LINE.
NO. EA. = NUMBER OF BARS OF EACH LENGTH.
NOMINAL LENGTHS ARE BASED ON OUT TO OUT DIMENSIONS SHOWN IN BENDING DIAGRAMS AND ARE LISTED FOR FABRICATORS USE. (NEAREST INCH)
ACTUAL LENGTHS ARE MEASURED ALONG CENTERLINE BAR TO THE NEAREST INCH.
PAYWEIGHTS ARE BASED ON ACTUAL LENGTHS.
FOUR ANGLE OR CHANNEL SPACERS ARE REQUIRED FOR EACH COLUMN SPIRAL. SPACERS ARE TO BE PLACED ON INSIDE OF SPIRALS. LENGTH AND WEIGHT OF COLUMN SPIRALS DO NOT INCLUDE SPLICES OR SPACERS.
REINFORCING STEEL (GRADE 60) FY = 60,000 PSI.

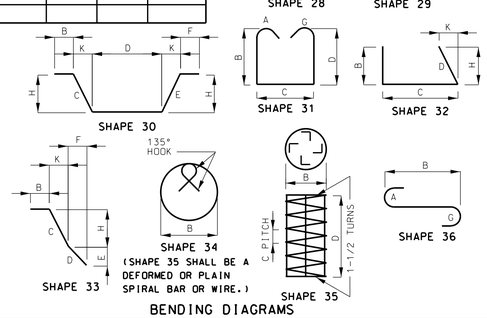

BENDING DIAGRAMS

"THIS MEDIA SHOULD NOT BE CONSIDERED A CERTIFIED DOCUMENT."

DATE PREPARED	1/2/2014
ROUTE	I-670
STATE	MO
DISTRICT	BR
SHEET NO.	9
COUNTY	JACKSON
JOB NO.	J4P2191
CONTRACT ID.	
PROJECT NO.	
BRIDGE NO.	A31401

DATE	DESCRIPTION

MISSOURI HIGHWAYS AND TRANSPORTATION COMMISSION
105 WEST CAPITOL
JEFFERSON CITY, MO 65102
1-888-ASK-MODOT (1-888-275-6636)

IF A SEAL IS PRESENT ON THIS SHEET IT HAS BEEN ELECTRONICALLY SEALED AND DATED.

Detailed Dec. 2013
Checked Dec. 2013

Note: This drawing is not to scale. Follow dimensions.

SEC/SUR 6 TWP 49N RGE 33W

MISSOURI HIGHWAYS AND TRANSPORTATION COMMISSION

U.I.P. & REHAB EXISTING (250′) COMPOSITE STEEL BOX GIRDER SPAN

General Notes:

Design Specifications:

2002 AASHTO LFD (17th Edition) Standard Specifications
Bridge Deck Rating = 7

Design Loading:

HS20-44 (1978 & New Construction)
15#/sq. ft. Future Wearing Surface
Fatigue Stress - Case II

Design Unit Stresses:

Class B-1 Concrete (Superstructure, Safety Barrier Curb & Fence Curb)	f′c = 4,000 psi
Reinforcing Steel (Grade 60)	fy = 60,000 psi
Structural Steel (ASTM A709 Grade 50)	fy = 50,000 psi

Fabricated Steel Connections:

Field connections shall be made with 3/4″ diameter high strength bolts and 13/16″ diameter holes, except as noted.

High strength bolts, nuts and washers will be sampled for quality assurance as specified in Sec 106.

Joint Filler:

All joint filler shall be in accordance with Sec 1057 for preformed sponge rubber expansion and partition joint filler, except as noted.

Reinforcing Steel:

Minimum clearance to reinforcing steel shall be 1 1/2″, unless otherwise shown.

Bars bonded in old concrete not removed shall be cleanly stripped and embedded into new concrete where possible. If length is available, old bars shall extend into new concrete at least 40 diameters for plain bars and 30 diameters for deformed bars, unless otherwise noted.

Miscellaneous:

Outline of old work is indicated by light dashed lines. Heavy lines indicate new work.

Contractor shall verify all dimensions in field before ordering new material.

Concrete Protective Coatings:

Protective coating for concrete bents and piers (Epoxy) shall be applied as shown on the bridge plans and in accordance with Sec 711.

Traffic Handling:

Structure to be closed during construction.

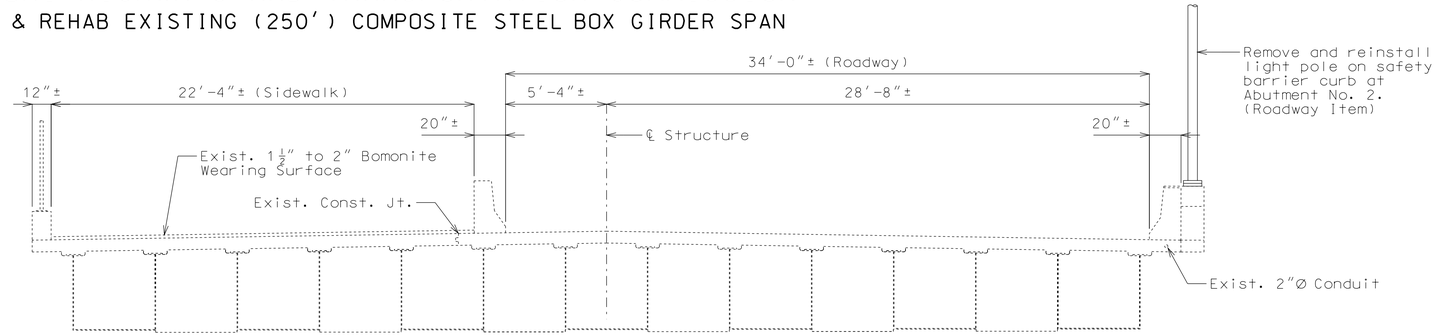

SECTION THRU EXISTING SLAB

Structural Steel Protective Coatings: (Each end of each box girder as shown.)

Protective Coating: System G in accordance with Sec 1081.

Surface Preparation: Surface preparation of the existing steel shall be in accordance with Sec 1081 for "Recoating of Structural Steel (System G, H or I)". The cost of surface preparation will be considered completely covered by the contract unit price per sq. foot for Surface Preparation for Recoating Structural Steel.

Prime Coat (New Steel): The cost of the prime coat will be considered completely covered by the contract unit price for Steel Angle (Dam). Tint of the prime coat for System G shall be similar to the color of the field coat to be used.

Prime Coat (Existing Steel): The cost of the prime coat will be considered completely covered by the contract unit price per sq. foot for Field Application of Inorganic Zinc Primer. Tint of the prime coat for System G shall be similar to the color of the field coat to be used.

Field Coats: The color of the field coat shall be Gray (Federal Standard #26373). The cost of the intermediate field coat will be considered completely covered by the contract unit price per sq. foot for Intermediate Field Coat (System G). The cost of the finish field coat will be considered completely covered by the contract unit price per sq. foot for Finish Field Coat (System G).

Sec 1081.4.5 shall be modified such that the word "RECOATED" is replaced by the words "RECOATED-SYSTEM G-END OF INSIDE OF BOX GIRDER".

Estimated Quantities

	Item		Total
	Curb Removal	linear foot	151
	Removal of Existing Expansion Joints & Adjacent Concrete	linear foot	116
	Removal of Existing Bearings	each	14
	Class B-1 Concrete	cu. yard	18.6
*	Safety Barrier Curb	linear foot	169
	Reinforcing Steel (Epoxy Coated)	pound	2,310
	Protective Coating - Concrete Bents and Piers (Epoxy)	lump sum	1
	Drain	each	3
	Surface Preparation for Recoating Structural Steel	lump sum	1
	Field Application of Inorganic Zinc Primer	lump sum	1
	Intermediate Field Coat (System G)	lump sum	1
	Finish Field Coat (System G)	lump sum	1
	Steel Angle (Dam)	each	14
	Sidewalk Skid Plate	linear foot	45
	Type N PTFE Bearing	each	14
	Strip Seal Expansion Joint System	linear foot	116

* Safety barrier curb shall be cast-in-place option or slip-form option.

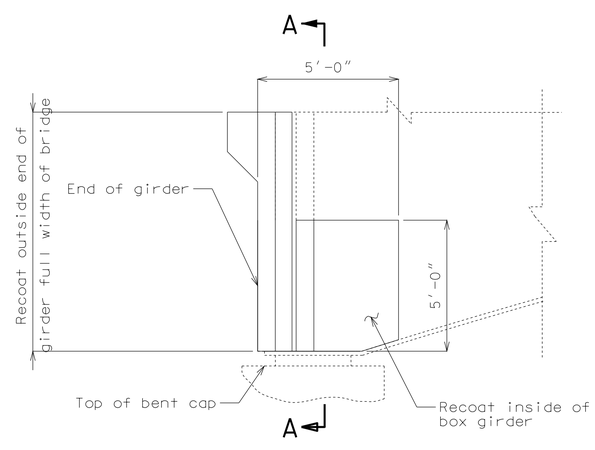

PART END ELEVATION

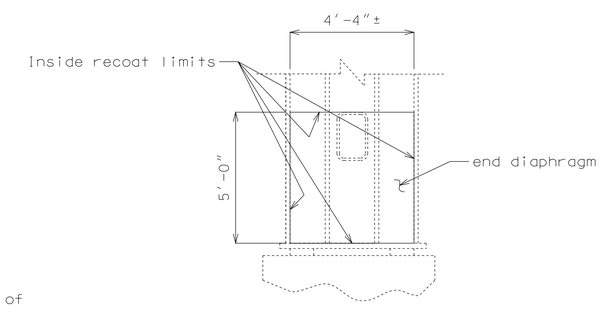

SECTION A-A

LIMITS OF RECOATING OF GIRDER ENDS AT END BENTS NO. 1 & 2

REPAIRS TO BRIDGE: SUMMIT STREET OVER I-670

STATE ROAD I-670 IN KANSAS CITY

STA. 93+49.78± (Match Existing)

STD. 901.00
STD. 617.10
STD. 706.35

Designed June 2013
Detailed Aug. 2013
Checked Sep. 2013

Note: This drawing is not to scale. Follow dimensions.

"THIS MEDIA SHOULD NOT BE CONSIDERED A CERTIFIED DOCUMENT."

DATE PREPARED	12/16/2013
ROUTE	I-670
STATE	MO
DISTRICT	BR
SHEET NO.	1
COUNTY	JACKSON
JOB NO.	J4P2191
CONTRACT ID.	
PROJECT NO.	
BRIDGE NO.	A31412

DATE	DESCRIPTION

MISSOURI HIGHWAYS AND TRANSPORTATION COMMISSION
105 WEST CAPITOL
JEFFERSON CITY, MO 65102
1-888-ASK-MODOT (1-888-275-6636)

IF A SEAL IS PRESENT ON THIS SHEET IT HAS BEEN ELECTRONICALLY SEALED AND DATED.

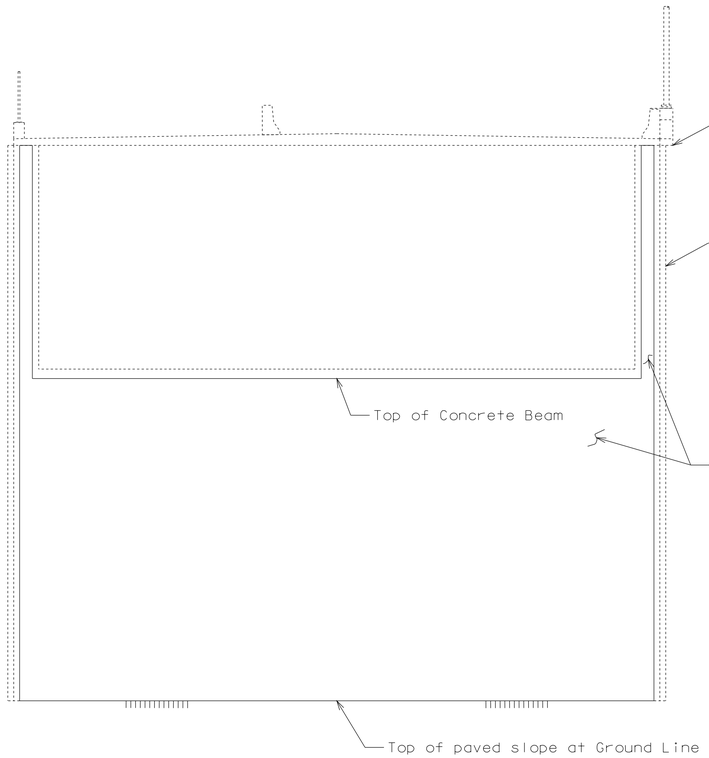

TYPICAL END ELEVATION
ABUTMENTS NO. 1 & 2
SHOWING PROTECTIVE COATING

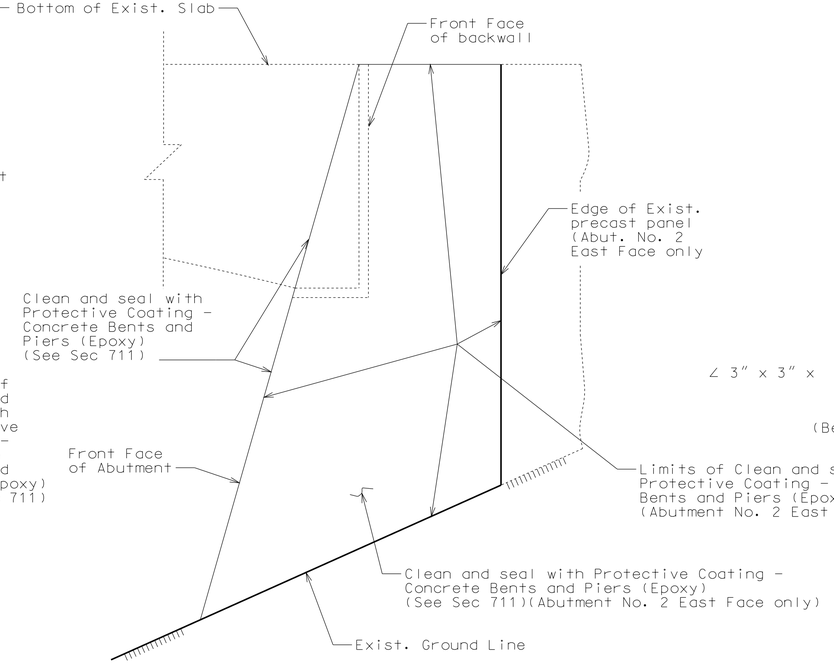

TYPICAL SIDE ELEVATION
ABUTMENTS NO. 1 & 2
SHOWING PROTECTIVE COATING

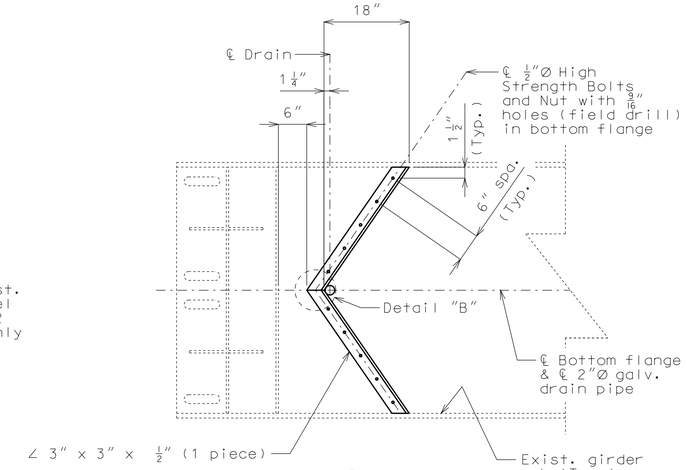

PLAN

(Bearing Pads and anchor bolts not shown for clarity)

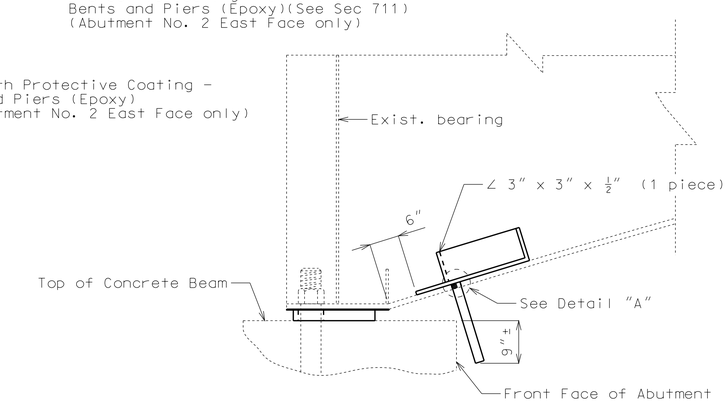

ELEVATION

DETAIL OF STEEL ANGLE (DAM) AT END OF GIRDERS AT ABUTMENTS NO. 1 & 2

Notes:

A silicone sealant in accordance with Sec 717.40 shall be placed between the steel angle and the girder bottom flange prior to final tightening.

Steel angle (dam), sealant and drain pipe installed complete in place will be considered completely covered by the contract unit price for Steel Angle (Dam).

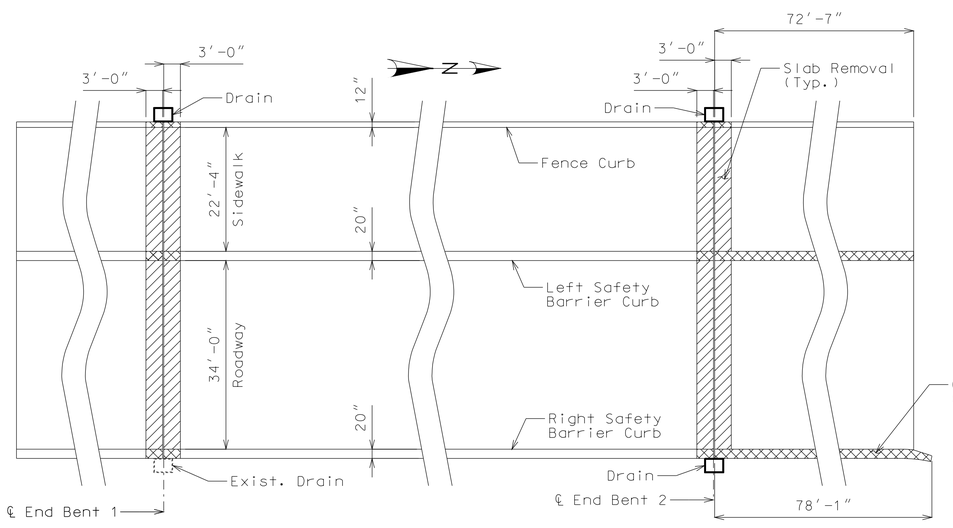

PLAN SHOWING SLAB AND CURB REMOVALS
AND LOCATIONS OF DRAINS

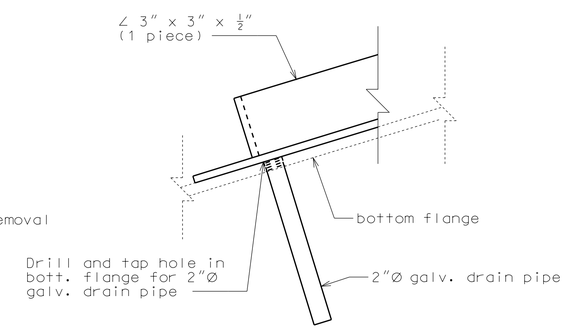

DETAIL "A"

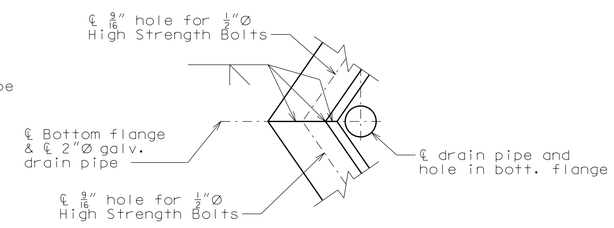

DETAIL "B"

Detailed Aug. 2013
Checked Sep. 2013

Note: This drawing is not to scale. Follow dimensions.

"THIS MEDIA SHOULD NOT BE CONSIDERED A CERTIFIED DOCUMENT."

DATE PREPARED	
12/16/2013	
ROUTE	STATE
I-670	MO
DISTRICT	SHEET NO.
BR	2
COUNTY	
JACKSON	
JOB NO.	
J4P2191	
CONTRACT ID.	
PROJECT NO.	
BRIDGE NO.	
A31412	

DATE	DESCRIPTION

MISSOURI HIGHWAYS AND TRANSPORTATION COMMISSION
105 WEST CAPITOL
JEFFERSON CITY, MO 65102
1-888-ASK-MODOT (1-888-275-6636)

IF A SEAL IS PRESENT ON THIS SHEET IT HAS BEEN ELECTRONICALLY SEALED AND DATED.

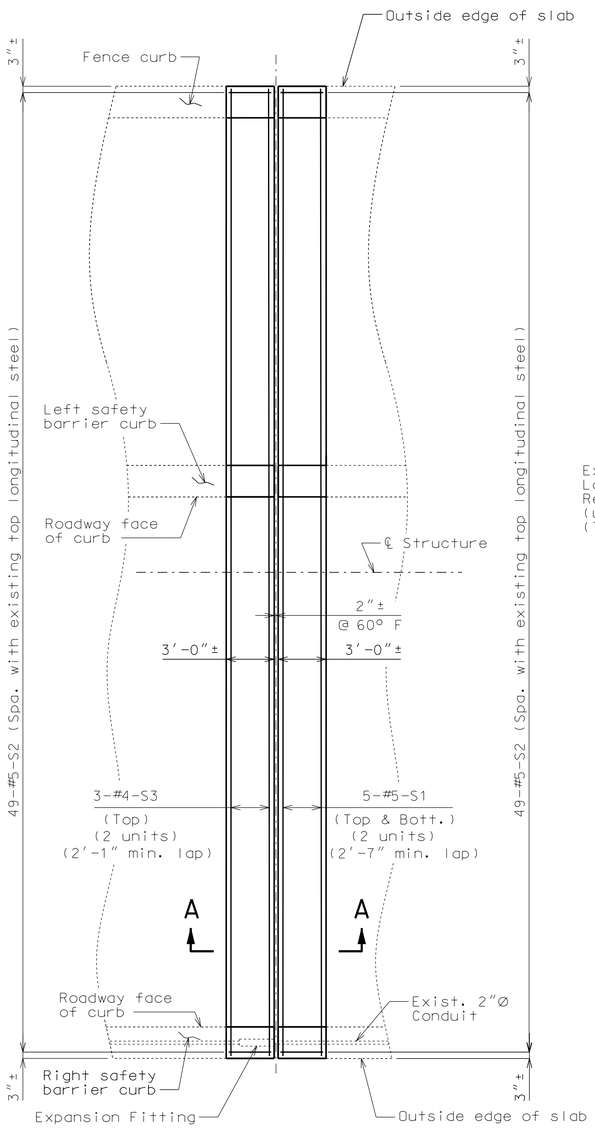

PART PLAN OF SLAB NEAR END BENT NO. 1

(End Bent No. 1 shown, End bent No. 2 similar)
(skid plate not shown for clarity)

Notes:

Existing conduit that falls within the area of curb removal shall be protected from damage.

Any damage to the conduit shall be repaired or replaced, at the contractor's expense, as directed by the engineer.

Conduit shall be reattached in removal areas. Cost of reattaching conduit will be considered completely covered by the contract unit price for Class B-1 Concrete.

Expansion fittings shall be placed as shown and set in accordance with the manufacturer's requirements and based on the air temperature at the time of setting given an estimated total expansion movement of 3" (Bt. 1) and 1" (Bt. 2) at open joints using a maximum temperature range of 150° F and a maximum temperature of 120° F.

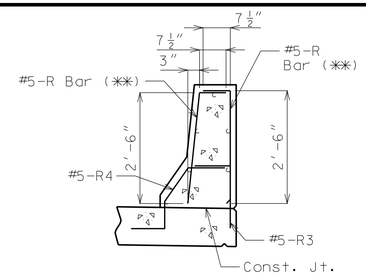

R-BAR PERMISSIBLE ALTERNATE SHAPE

(✱✱) The R1 bar may be separated into two bars as shown, at the contractor's option. (All dimensions are out to out.)

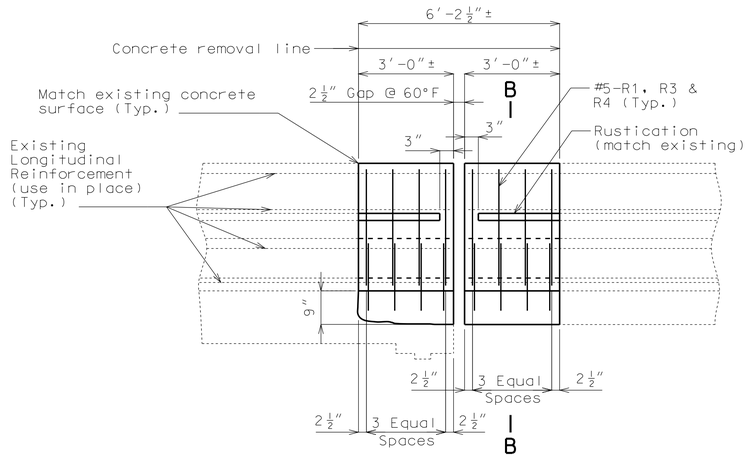

PART ELEVATION OF RIGHT SAFETY BARRIER CURB AT END BENT NO. 1

(Right barrier curb shown, left barrier curb similar)

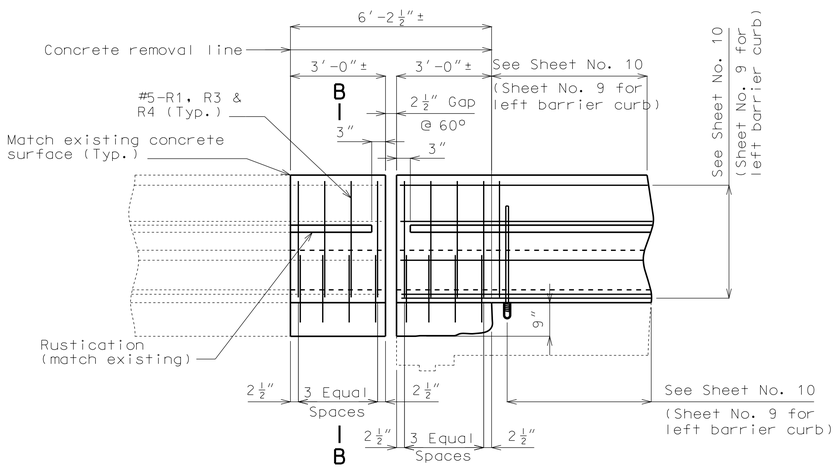

PART ELEVATION OF RIGHT SAFETY BARRIER CURB AT END BENT NO. 2

(Right barrier curb shown, left barrier curb similar)

DETAILS OF SLAB AND SAFETY BARRIER CURB AT END BENTS NO. 1 & 2

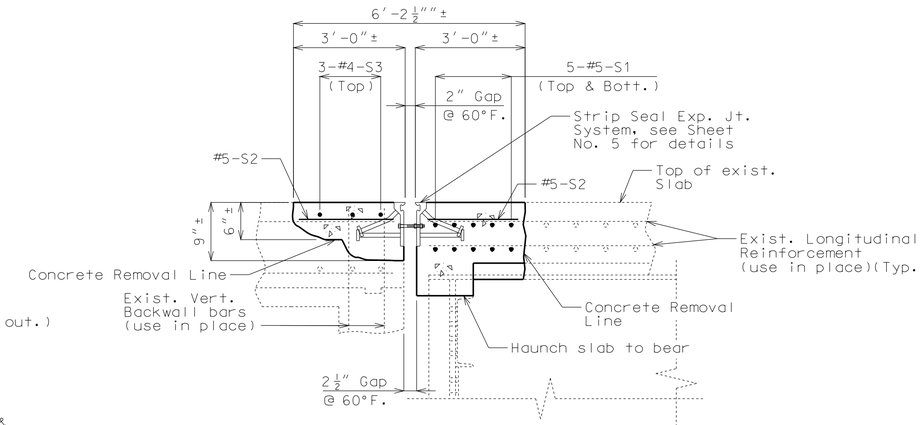

PART SECTION A-A

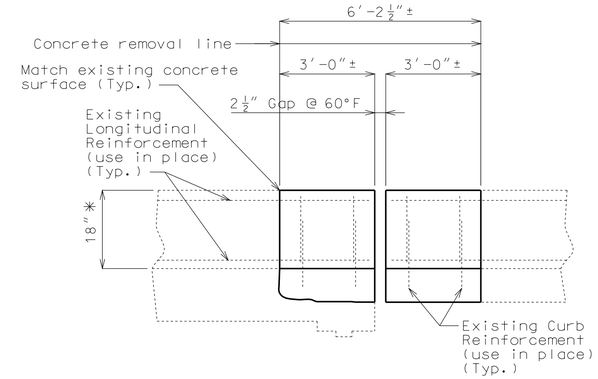

PART ELEVATION OF FENCE CURB AT END BENT NO. 1

(End Bent No. 1 shown, End Bent No. 2 similar)
(Fence not shown for clarity)

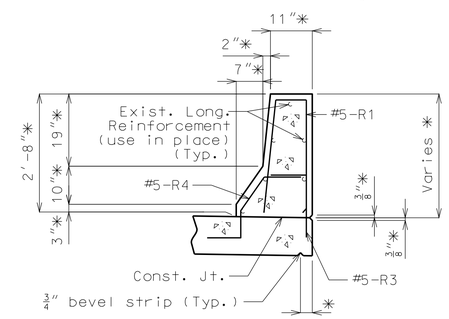

PART SECTION B-B

✱ Match existing.

Notes:

Payment for slab and curb removal will be considered completely covered by the contract unit price for Removal of Existing Expansion Joints and Adjacent Concrete per linear foot.

Remove and reinstall pedestrian fence as needed for curb removal. Remove and reinstall pedestrian fence will be considered completely covered by the contract unit price for Removal of Existing Expansion Joints and Adjacent Concrete per linear foot.

See Sheet No. 7 for Details of Sidewalk Skid Plate at End Bents No. 1 & 2.

See Sheets No. 9, 10 & 11 for Part Section Showing Rustication Details.

Detailed Aug. 2013
Checked Sep. 2013

Note: This drawing is not to scale. Follow dimensions.

"THIS MEDIA SHOULD NOT BE CONSIDERED A CERTIFIED DOCUMENT."

DATE PREPARED	
1/7/2014	
ROUTE	STATE
I-670	MO
DISTRICT	SHEET NO.
BR	3
COUNTY	
JACKSON	
JOB NO.	
J4P2191	
CONTRACT ID.	
PROJECT NO.	
BRIDGE NO.	
A31412	

DATE	DESCRIPTION

MISSOURI HIGHWAYS AND TRANSPORTATION COMMISSION
105 WEST CAPITOL
JEFFERSON CITY, MO 65102
1-888-ASK-MODOT (1-888-275-6636)

IF A SEAL IS PRESENT ON THIS SHEET IT HAS BEEN ELECTRONICALLY SEALED AND DATED.

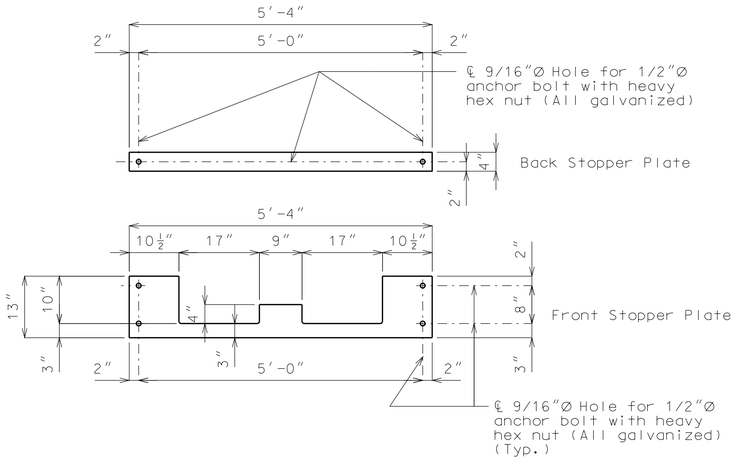

PLAN OF GALVANIZED STEEL STOPPER PLATES

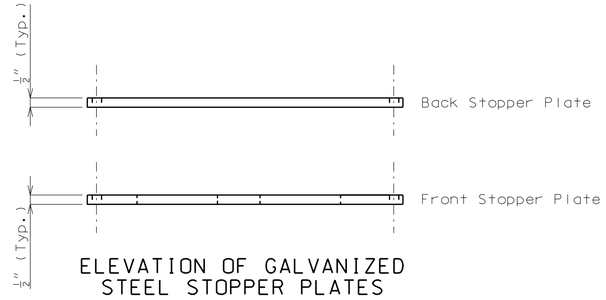

ELEVATION OF GALVANIZED STEEL STOPPER PLATES

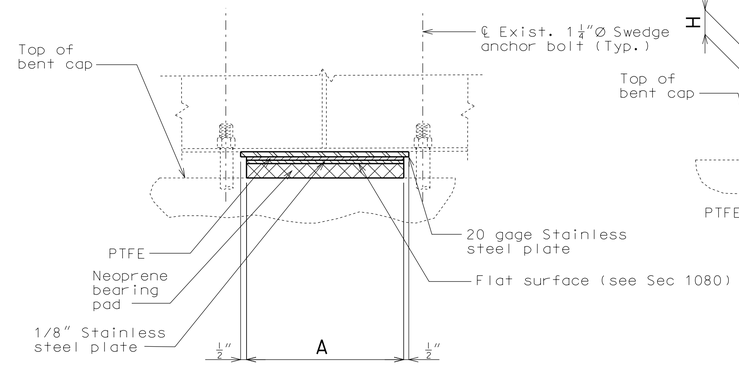

END VIEW

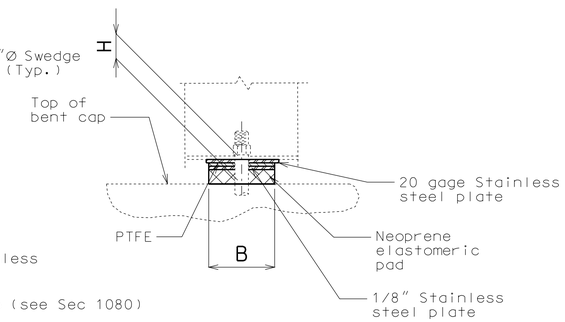

SIDE VIEW

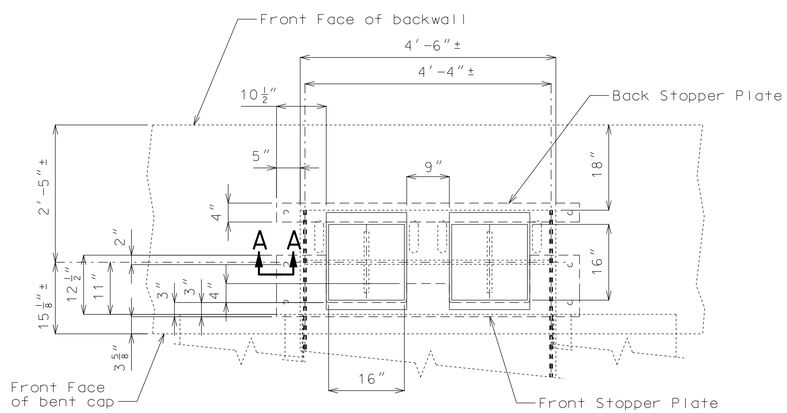

PART PLAN SHOWING STOPPER PLATES AT END BENT NO. 1

Stopper plates shall be provided to prevent loss of support due to creeping of PTFE bearings. Payment for fabricating and installing the stopper plates and straps will be considered completely covered by the contract unit price for Type N PTFE Bearing.

The bottom face of the 20 Gage stainless steel plate that is bonded to the flange shall be lubricated with a lubricant that is approved by the bearing manufacturer.

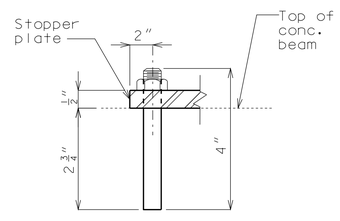

PART SECTION A-A

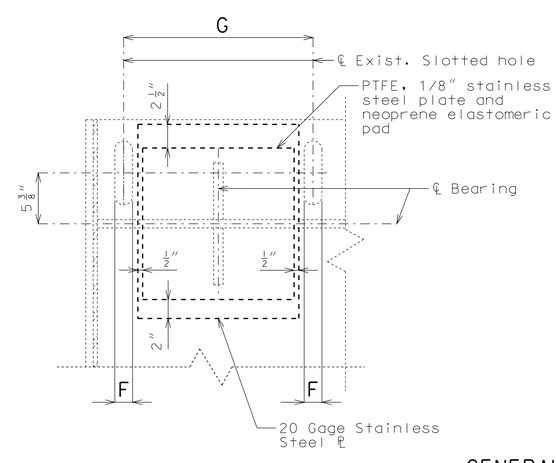

PART PLAN

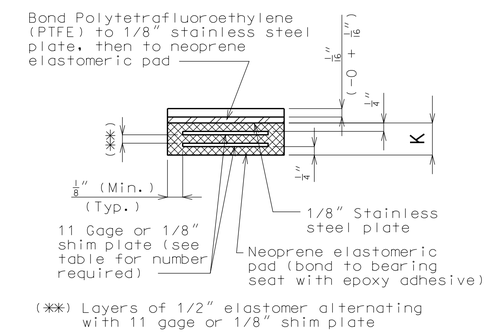

(✱✱) Layers of 1/2" elastomer alternating with 11 gage or 1/8" shim plate

NEOPRENE ELASTOMERIC PAD

PTFE SLIDING BEARINGS																		
BENT NO.	A	B			E	F	G	H		K					Q	R	NUMBER OF SHIM PLATES(✱)	NUMBER REQUIRED
1	16"	16"			7½"	1⅞"	20"	1¾" ±		1½"					3"	3/16"	2	14
																	TOTAL BEARINGS	14

(✱) The required shim plates shall be placed between layers of elastomer and molded together to form an integral unit.

GENERAL NOTES:

Anchor bolt shall be at the ℄ of slotted hole at 60°F. Bearing position shall be adjusted R for each 10° fall or rise in temperature at installation.

Neoprene Elastomeric Pads shall be 70 Durometer.

Type N PTFE Bearings shall be in accordance with Sec 716.

PTFE surface shall be fabricated as a single piece. Splicing will not be permitted.

The 20 Gage stainless steel plate shall be bonded to the flange with high temperature - resistant epoxy.

The temporary supports shall be capable of safely supporting a service dead load of 157 kips per bearing (factor of safety not included). See Special Provisions.

DETAILS OF TYPE "N" PTFE BEARINGS

Detailed July 2013
Checked Sep. 2013

Note: This drawing is not to scale. Follow dimensions.

"THIS MEDIA SHOULD NOT BE CONSIDERED A CERTIFIED DOCUMENT."

DATE PREPARED	
12/16/2013	
ROUTE I-670	STATE MO
DISTRICT BR	SHEET NO. 4
COUNTY JACKSON	
JOB NO. J4P2191	
CONTRACT ID.	
PROJECT NO.	
BRIDGE NO. A31412	

DATE	DESCRIPTION

MISSOURI HIGHWAYS AND TRANSPORTATION COMMISSION
105 WEST CAPITOL
JEFFERSON CITY, MO 65102
1-888-ASK-MODOT (1-888-275-6636)

IF A SEAL IS PRESENT ON THIS SHEET IT HAS BEEN ELECTRONICALLY SEALED AND DATED.

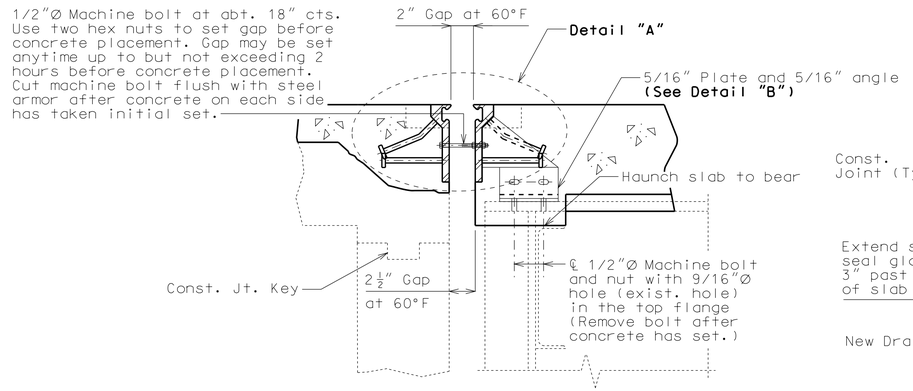

SECTION A-A

Note: Strip seal gland not shown for clarity.

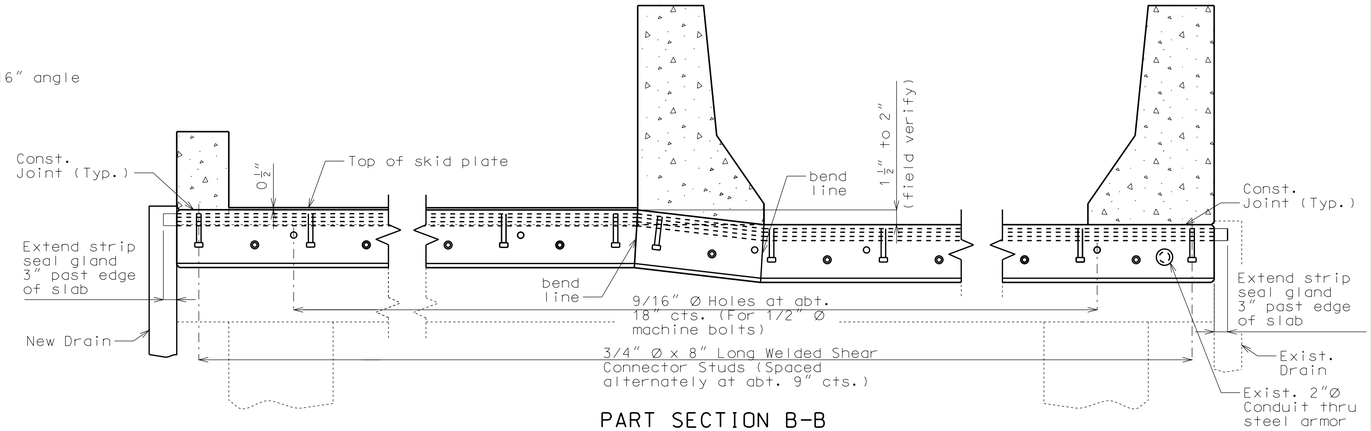

PART SECTION B-B

Notes:

See Sheet No. 7 for skid plate details.

See Sheet No. 8 for for new drain at Bent No. 1.

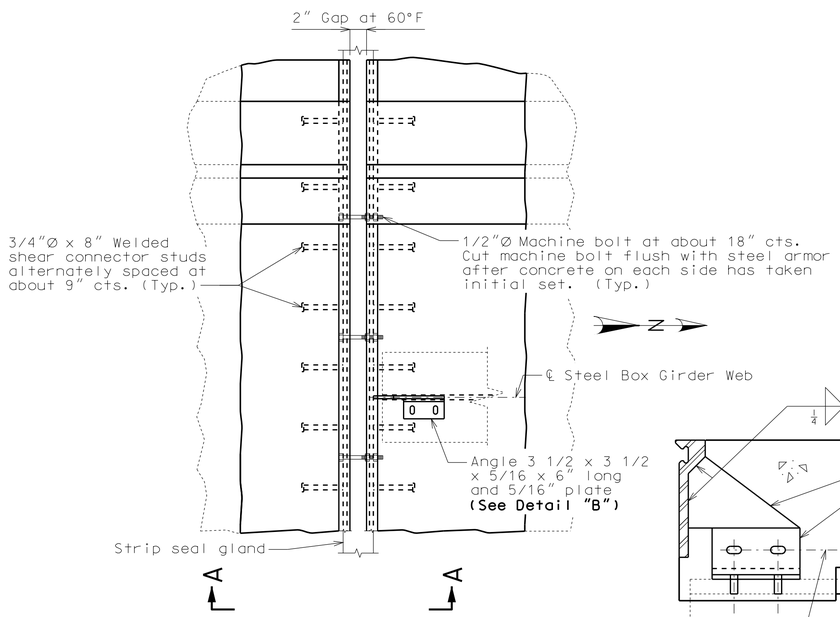

PART PLAN

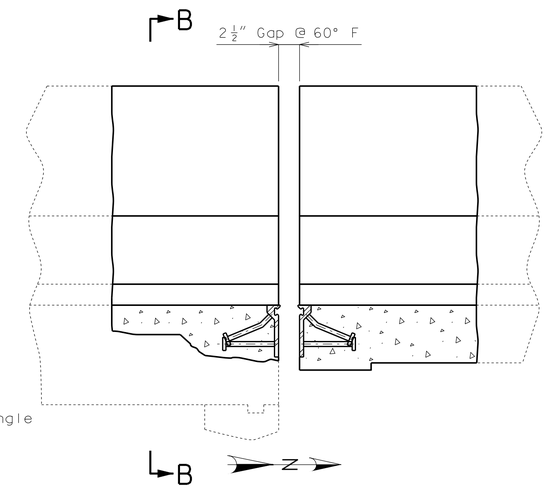

PART ELEVATION OF BARRIER CURB

Note: Strip seal gland not shown for clarity.

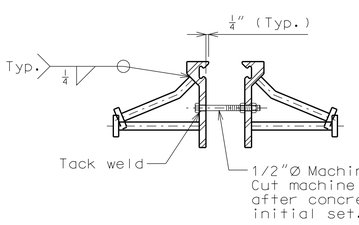

DETAIL "A"

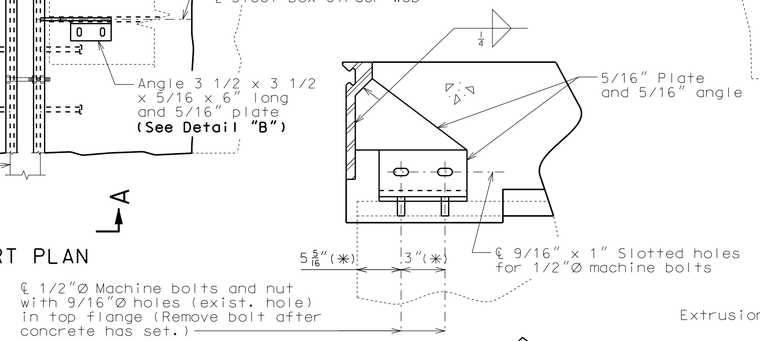

DETAIL "B"

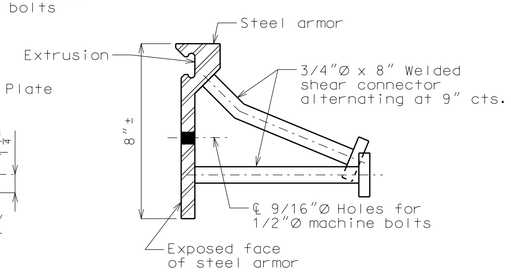

DETAIL OF JOINT ARMOR

GENERAL NOTES:

Expansion joint system shall be fabricated in one section, except for stage construction and when the length is over 50 feet. A complete joint penetration groove welded splice shall be required. Welds shall be ground flush to provide a smooth surface. The expansion joint system shall be fabricated and installed to the crown and grade of the roadway.

The strip seal gland shall be installed in joints in one continuous piece without field splices. Factory splicing will be permitted for joints in excess of 53 feet.

Structural steel for the expansion joint system shall be ASTM A709 Grade 36 except the steel armor may be ASTM A709 Grade 50W. Anchors for the expansion joint system shall be in accordance with Sec 1037. Strip seal expansion joint system shall be in accordance with Sec 717.

Structural steel for the expansion joint system shall be coated with a minimum of two coats of inorganic zinc primer (5 mils minimum) or galvanized in accordance with ASTM A123. Anchors need not be protected from overspray.

Plan dimensions are based on installation at 60°F. The expansion gap and other dimensions shall be increased or decreased 3/16" for each 10° fall or rise in temperature at installation.

Longitudinal reinforcing steel shall be placed so that ends shall not be more than ±1" from vertical leg of the steel armor at the expansion joint system.

Concrete shall be forced under and around steel armor and anchors. Proper consolidation of the concrete shall be achieved by localized internal vibration.

(*) Match existing.

DETAIL OF GLAND

DETAILS OF STRIP SEAL AT END BENT NO. 1

Detailed July 2013
Checked Sep. 2013

Note: This drawing is not to scale. Follow dimensions.

"THIS MEDIA SHOULD NOT BE CONSIDERED A CERTIFIED DOCUMENT."

DATE PREPARED	12/16/2013
ROUTE	I-670
STATE	MO
DISTRICT	BR
SHEET NO.	5
COUNTY	JACKSON
JOB NO.	J4P2191
CONTRACT ID.	
PROJECT NO.	
BRIDGE NO.	A31412

DESCRIPTION

DATE

MISSOURI HIGHWAYS AND TRANSPORTATION COMMISSION
105 WEST CAPITOL
JEFFERSON CITY, MO 65102
1-888-ASK-MODOT (1-888-275-6636)

IF A SEAL IS PRESENT ON THIS SHEET IT HAS BEEN ELECTRONICALLY SEALED AND DATED.

REV.

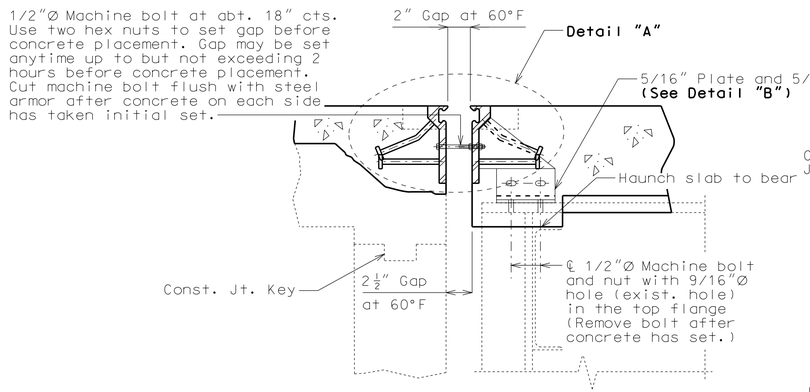

SECTION A-A

Note: Strip seal gland not shown for clarity.

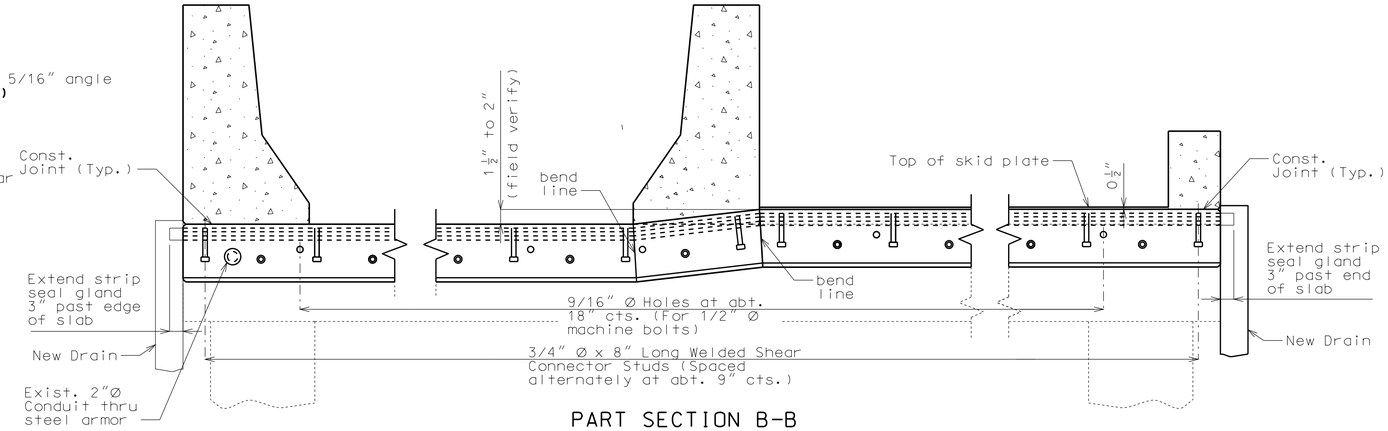

PART SECTION B-B

Notes:

See Sheet No. 7 for skid plate details.

See Sheet No. 8 for for new drain at Bent No. 2.

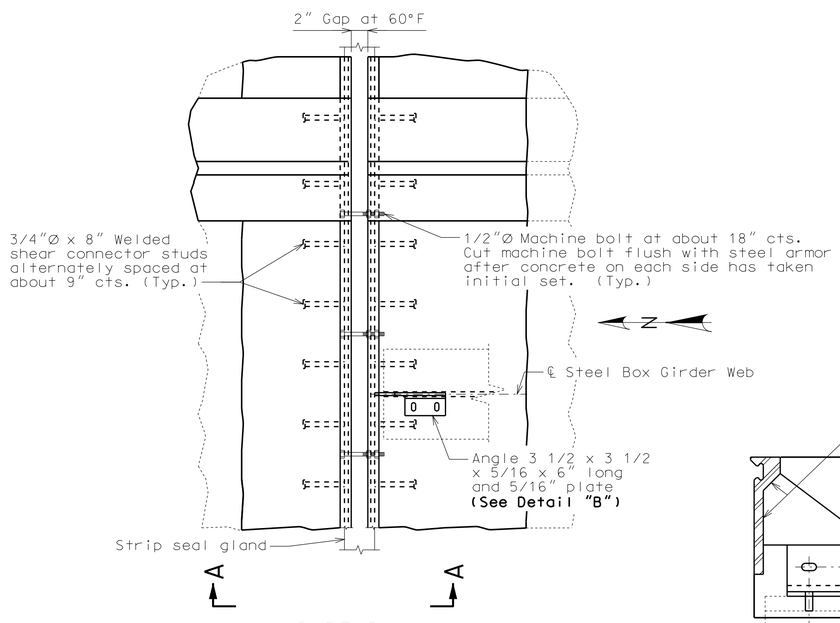

PART PLAN

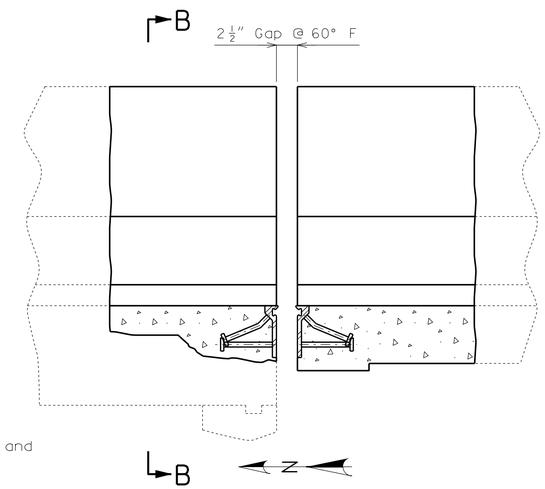

PART ELEVATION OF BARRIER CURB

Note: Strip seal gland not shown for clarity.

GENERAL NOTES:

Expansion joint system shall be fabricated in one section, except for stage construction and when the length is over 50 feet. A complete joint penetration groove welded splice shall be required. Welds shall be ground flush to provide a smooth surface. The expansion joint system shall be fabricated and installed to the crown and grade of the roadway.

The strip seal gland shall be installed in joints in one continuous piece without field splices. Factory splicing will be permitted for joints in excess of 53 feet.

Structural steel for the expansion joint system shall be ASTM A709 Grade 36 except the steel armor may be ASTM A709 Grade 50W. Anchors for the expansion joint system shall be in accordance with Sec 1037. Strip seal expansion joint system shall be in accordance with Sec 717.

Structural steel for the expansion joint system shall be coated with a minimum of two coats of inorganic zinc primer (5 mils minimum) or galvanized in accordance with ASTM A123. Anchors need not be protected from overspray.

Plan dimensions are based on installation at 60°F. The expansion gap and other dimensions shall be increased or decreased 0" for each 10° fall or rise in temperature at installation.

Longitudinal reinforcing steel shall be placed so that ends shall not be more than ±1" from vertical leg of the steel armor at the expansion joint system.

Concrete shall be forced under and around steel armor and anchors. Proper consolidation of the concrete shall be achieved by localized internal vibration.

(✱) Match existing

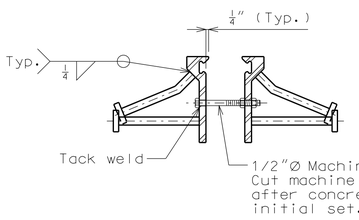

DETAIL "A"

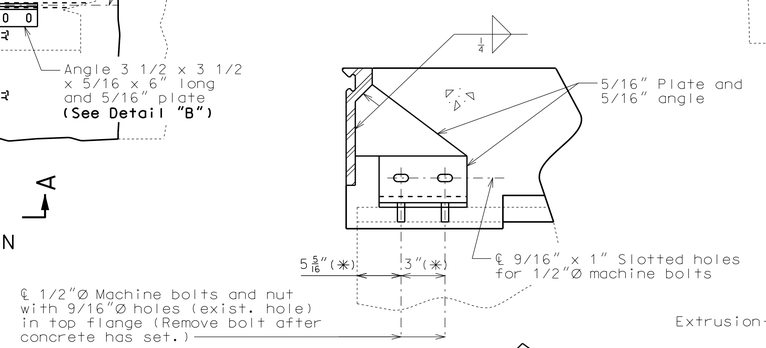

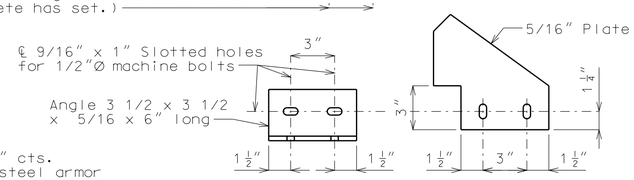

DETAIL "B"

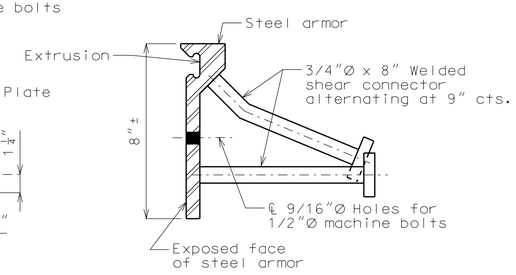

DETAIL OF JOINT ARMOR

Strip seal gland size = 4"

DETAIL OF GLAND

DETAILS OF STRIP SEAL AT END BENT NO. 2

Detailed July 2013
Checked Sep. 2013

Note: This drawing is not to scale. Follow dimensions.

"THIS MEDIA SHOULD NOT BE CONSIDERED A CERTIFIED DOCUMENT."

DATE PREPARED	12/16/2013
ROUTE	I-670
STATE	MO
DISTRICT	BR
SHEET NO.	6
COUNTY	JACKSON
JOB NO.	J4P2191
CONTRACT ID.	
PROJECT NO.	
BRIDGE NO.	A31412

DESCRIPTION

DATE

MISSOURI HIGHWAYS AND TRANSPORTATION COMMISSION

105 WEST CAPITOL
JEFFERSON CITY, MO 65102
1-888-ASK-MODOT (1-888-275-6636)

IF A SEAL IS PRESENT ON THIS SHEET IT HAS BEEN ELECTRONICALLY SEALED AND DATED.

REV.

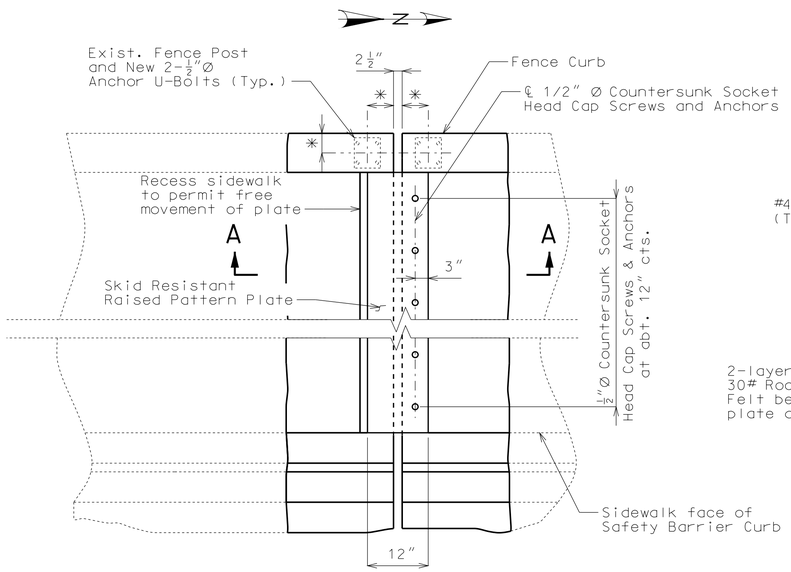

PART PLAN
SIDEWALK AT END BENT NO.1
(End bent No. 2 similar)
(Reinforcement steel not shown for clarity.)

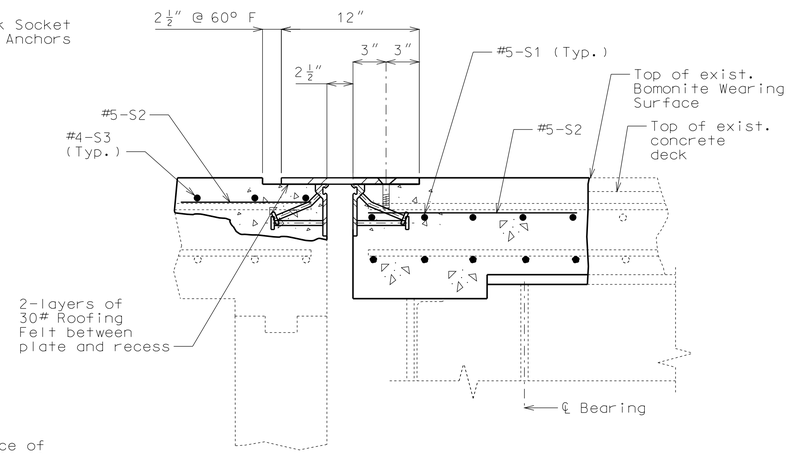

PART SECTION A-A

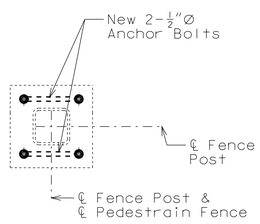

SECTION C-C

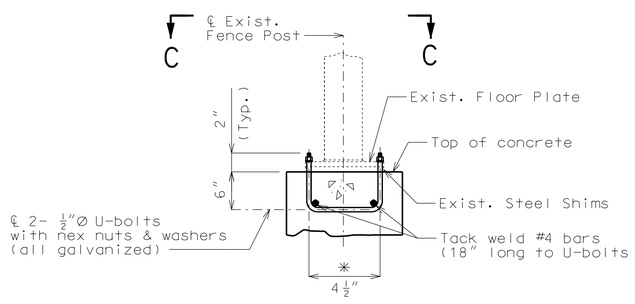

DETAIL "B"

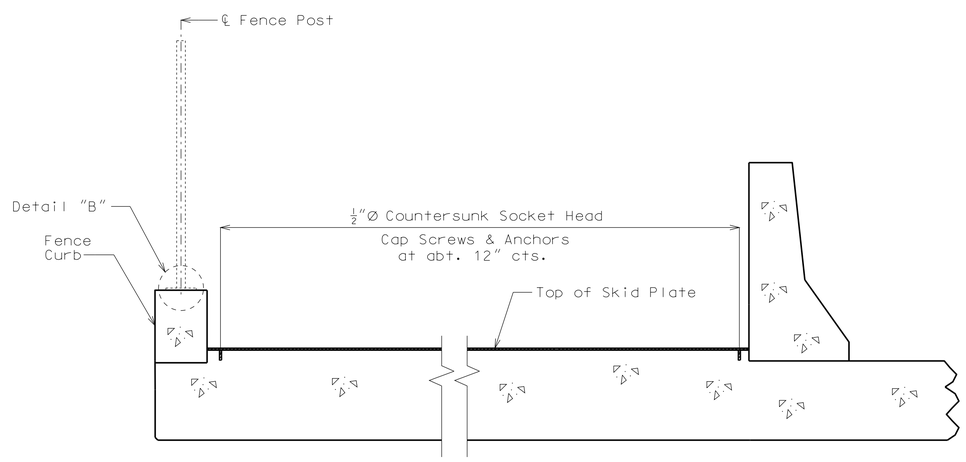

PART SECTION THRU FENCE CURB
AND SAFETY BARRIER CURB
SHOWING SIDEWALK SKID PLATE
(Strip seal expansion device not shown for clarity.)

GENERAL NOTES:

Expansion device shall be fabricated in one section. The expansion device shall be fabricated and installed to the crown and grade of the roadway.

Plan dimensions are based on installation at 60°F. The expansion gap and other dimensions shall be increased or decreased $\frac{3}{16}$" (Bt. 1) and 0" (Bt. 2) for each 10° fall or rise in temperature at installation.

Material for the expansion device shall be ASTM A709 Grade 36 structural steel. Anchors for the expansion device shall be in accordance with Sec 1037.

Skid Plate shall be coated with a minimum of two coats of inorganic zinc primer (5 mils minimum) or galvanized in accordance with ASTM A123.

Skid resistant raised pattern plate installed complete-in-place will be considered completely covered by the contract unit price for Sidewalk Skid Plate.

Skid resistant raised pattern plate anchors shall be a drilled cone expansion or a cast-in-place wing type threaded insert. The minimum ultimate pullout capacity for these anchors shall be 2700 lbs. in f'c = 4000 psi concrete. Lead anchors will not be permitted. Holes in the sidewalk for anchors shall not be drilled until the concrete is at least 7 days old.

For "Details of Slab and Safety Barrier Curb at End Bents No. 1 & 2" see Sheet No. 3.

Anchor U-bolts and nuts shall be ½"Ø ASTM F1554 Grade 55. Anchor U-bolts, nuts and washers shall be fully galvanized.

Remove and reinstall pedestrian fence including new anchor U-bolts as needed for curb removal. Remove and reinstall pedestrian fence including anchor U-bolts will be considered completely covered by the contract unit price for Removal of Existing Expansion Joints and Adjacent Concrete per linear foot.

✳ Match Existing.

"THIS MEDIA SHOULD NOT BE CONSIDERED A CERTIFIED DOCUMENT."

DATE PREPARED	
12/16/2013	
ROUTE: I-670	STATE: MO
DISTRICT: BR	SHEET NO.: 7
COUNTY: JACKSON	
JOB NO.: J4P2191	
CONTRACT ID.	
PROJECT NO.	
BRIDGE NO.: A31412	

DESCRIPTION	DATE

MISSOURI HIGHWAYS AND TRANSPORTATION COMMISSION
105 WEST CAPITOL
JEFFERSON CITY, MO 65102
1-888-ASK-MODOT (1-888-275-6636)

IF A SEAL IS PRESENT ON THIS SHEET IT HAS BEEN ELECTRONICALLY SEALED AND DATED.

DETAILS OF SIDEWALK SKID PLATE AT END BENTS NO. 1 & 2

Detailed Aug. 2013
Checked Sep. 2013

Note: This drawing is not to scale. Follow dimensions.

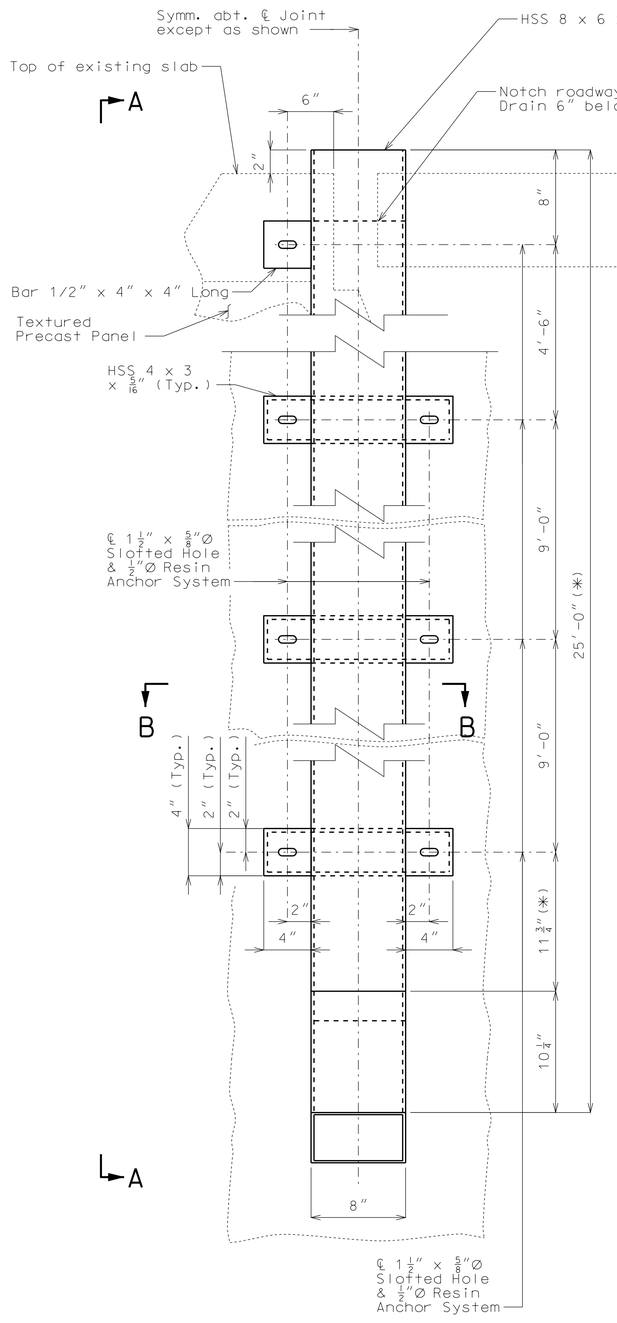

ELEVATION OF DRAIN AT END BENT

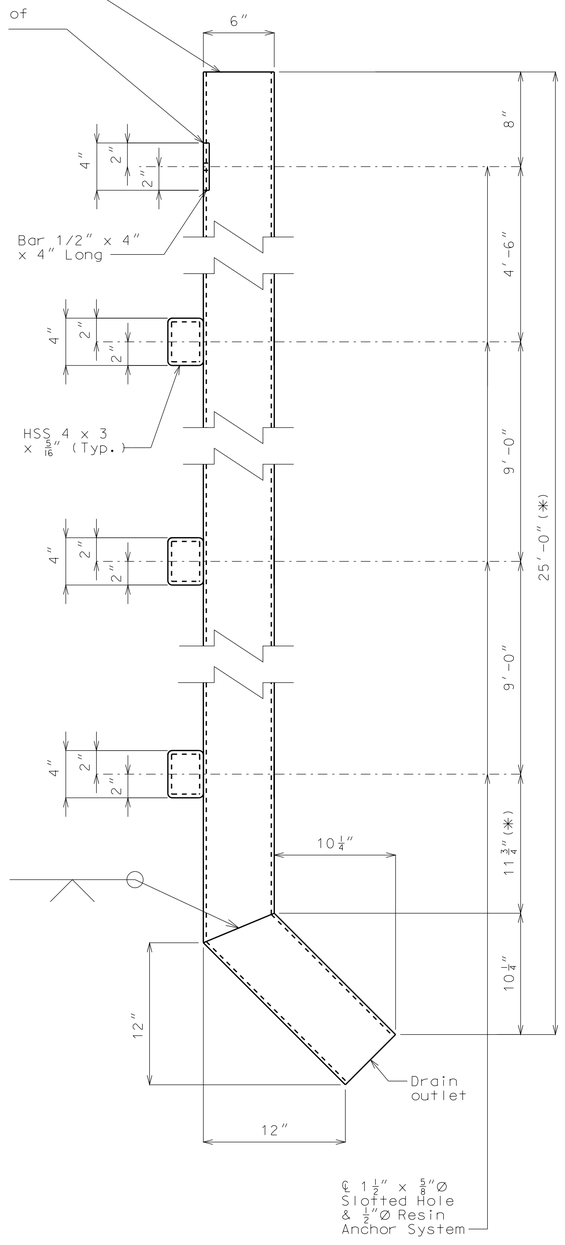

ELEVATION A-A

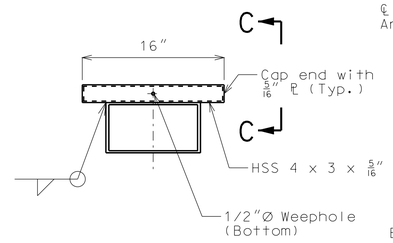

PART SECTION B-B

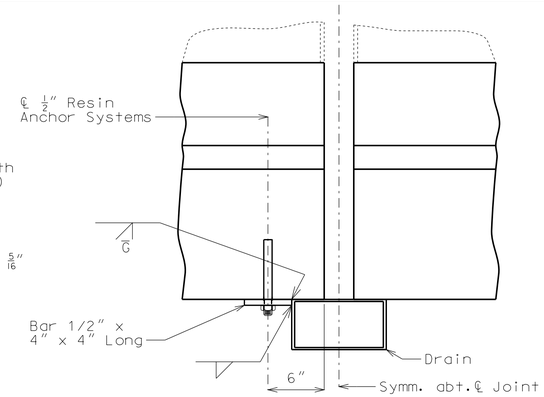

PART PLAN OF DRAIN ATTACHMENT

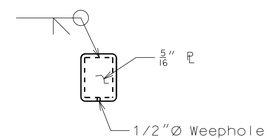

ELEVATION C-C

Notes:

The contractor shall use one of the qualified resin anchor systems in accordance with Sec 1039.

The minimum embedment depth in concrete with f'c = 4,000 psi for the resin anchor system shall be that required to meet the minimum ultimate pullout strength in accordance with Sec 1039 but shall not be less than 5".

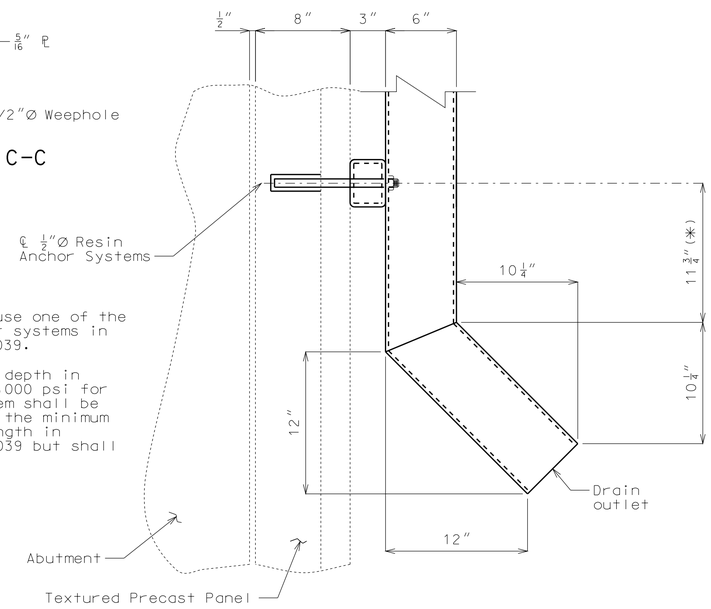

PART ELEVATION A-A SHOWING ATTACHMENT TO ABUTMENT

Notes:

Structural steel shall be either welded sheets of ASTM A709 Grade 36 steel or structural steel tubing ASTM A500 or A501.

Plate and bar material shall be ASTM A709 Grade 36 steel.

Outside dimensions of drains are 8" x 6".

The drains, spacers and bracket assemblies shall be galvanized in accordance with ASTM A123.

All bolts, hardened washers, lock washers and nuts shall be galvanized in accordance with ASTM A153.

Payment for furnishing and installing Drains and Resin Anchor Systems complete in place will be considered completely covered by the contract unit price for Drain.

Shop drawings will not be required for the slab drains and bracket assemblies.

Drain shall be centered on top of Slab Expansion Joint @ 60° F.

(*) Contractor shall field verify dimension needed to terminate drain outlet 12"± above existing ground.

DETAILS OF DRAIN AT EXPANSION DEVICES

BENT 1 (LEFT) & BENT 2 (LEFT)

(1 required for Bent 1, leftside & Bent 2, leftside)

Detailed Nov. 2013
Checked Nov. 2013

Note: This drawing is not to scale. Follow dimensions.

"THIS MEDIA SHOULD NOT BE CONSIDERED A CERTIFIED DOCUMENT."

DATE PREPARED	
12/16/2013	
ROUTE	STATE
I-670	MO
DISTRICT	SHEET NO.
BR	8
COUNTY	
JACKSON	
JOB NO.	
J4P2191	
CONTRACT ID.	
PROJECT NO.	
BRIDGE NO.	
A31412	

DATE	DESCRIPTION

MISSOURI HIGHWAYS AND TRANSPORTATION COMMISSION
105 WEST CAPITOL
JEFFERSON CITY, MO 65102
1-888-ASK-MODOT (1-888-275-6636)

IF A SEAL IS PRESENT ON THIS SHEET IT HAS BEEN ELECTRONICALLY SEALED AND DATED.

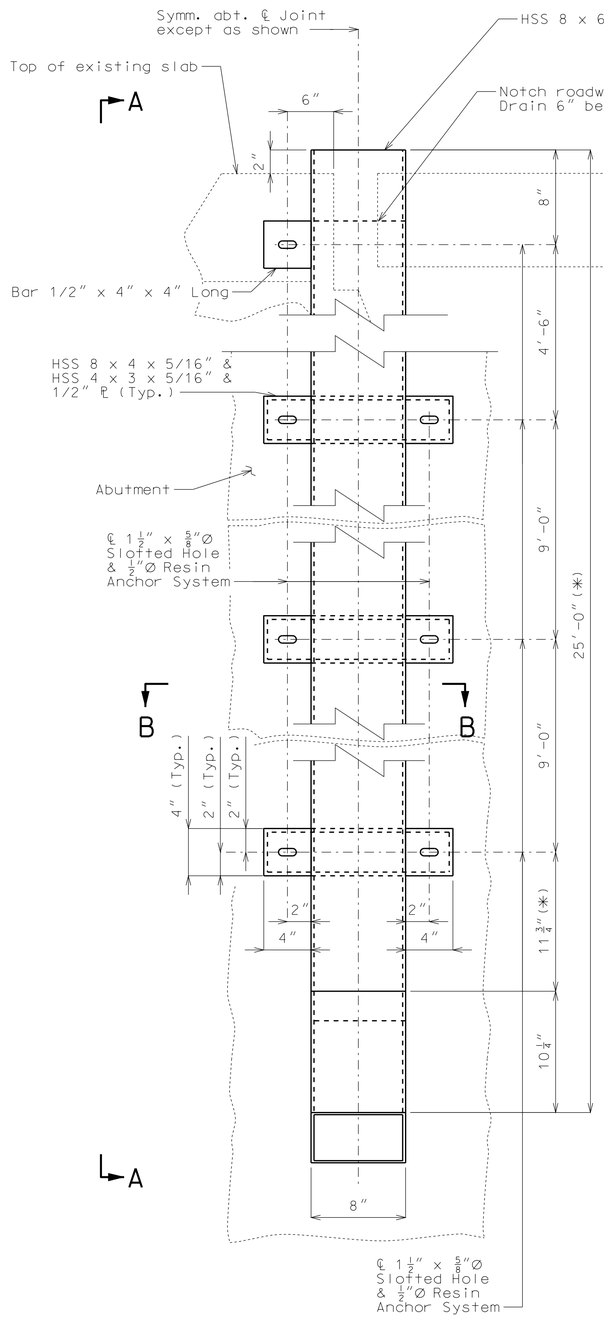

ELEVATION OF DRAIN AT END BENT

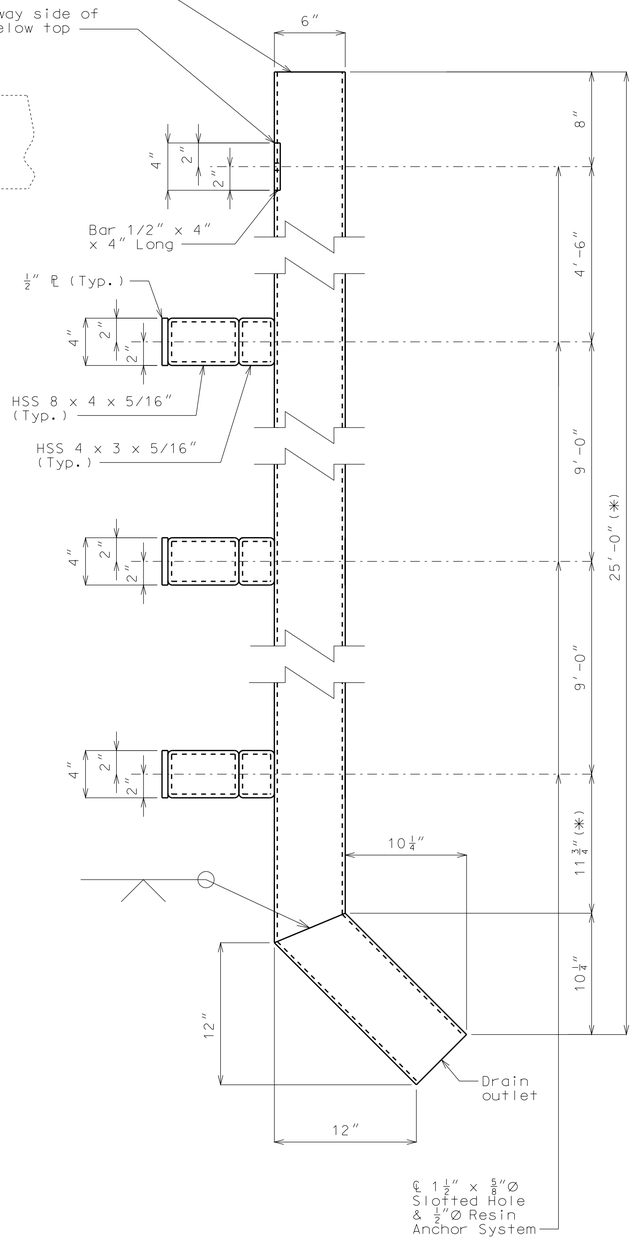

ELEVATION A-A

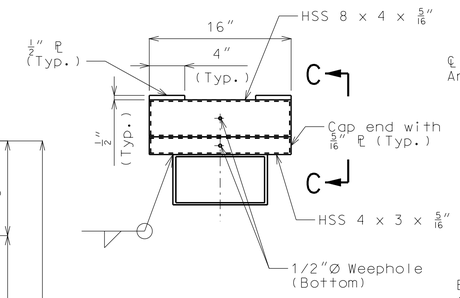

PART SECTION B-B

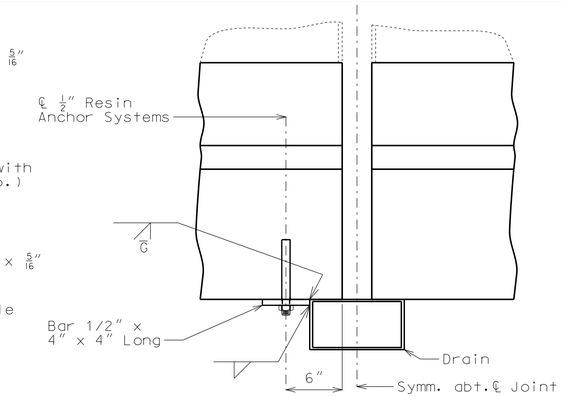

PART PLAN OF DRAIN ATTACHMENT

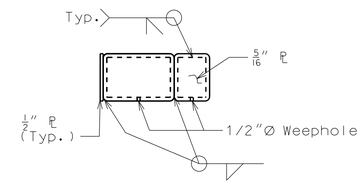

ELEVATION C-C

Notes:

The contractor shall use one of the qualified resin anchor systems in accordance with Sec 1039.

The minimum embedment depth in concrete with f'c = 4,000 psi for the resin anchor system shall be that required to meet the minimum ultimate pullout strength in accordance with Sec 1039 but shall not be less than 5".

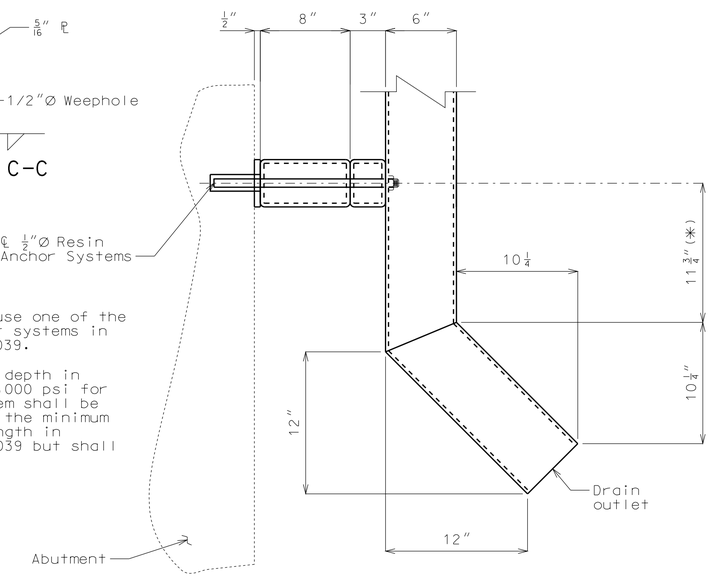

PART ELEVATION A-A SHOWING ATTACHMENT TO ABUTMENT

Notes:

Structural steel shall be either welded sheets of ASTM A709 Grade 36 steel or structural steel tubing ASTM A500 or A501.

Plate and bar material shall be ASTM A709 Grade 36 steel.

Outside dimensions of drains are 8" x 6".

The drains, spacers and bracket assemblies shall be galvanized in accordance with ASTM A123.

All bolts, hardened washers, lock washers and nuts shall be galvanized in accordance with ASTM A153.

Payment for furnishing and installing Drains and Resin Anchor Systems complete in place will be considered completely covered by the contract unit price for Drain.

Shop drawings will not be required for the slab drains and bracket assemblies.

Drain shall be centered on top of Slab Expansion Joint @ 60° F.

(*) Contractor shall field verify dimension needed to terminate drain outlet 12"± above existing ground.

DETAILS OF DRAIN AT EXPANSION DEVICES

BENT 2 (RIGHT)

(1 required for Bent 2, right side)

Detailed Nov. 2013
Checked Nov. 2013

Note: This drawing is not to scale. Follow dimensions.

"THIS MEDIA SHOULD NOT BE CONSIDERED A CERTIFIED DOCUMENT."

DATE PREPARED	
12/16/2013	
ROUTE	STATE
I-670	MO
DISTRICT	SHEET NO.
BR	9
COUNTY	
JACKSON	
JOB NO.	
J4P2191	
CONTRACT ID.	
PROJECT NO.	
BRIDGE NO.	
A31412	

DATE	DESCRIPTION

MISSOURI HIGHWAYS AND TRANSPORTATION COMMISSION
105 WEST CAPITOL
JEFFERSON CITY, MO 65102
1-888-ASK-MODOT (1-888-275-6636)

IF A SEAL IS PRESENT ON THIS SHEET IT HAS BEEN ELECTRONICALLY SEALED AND DATED.

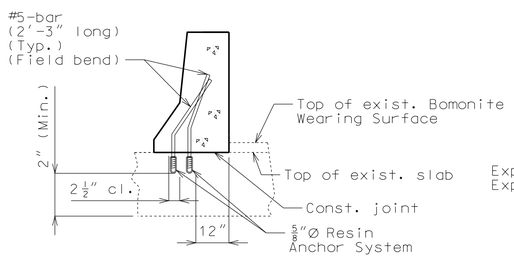

ANCHOR SYSTEMS AT SECTION A-A

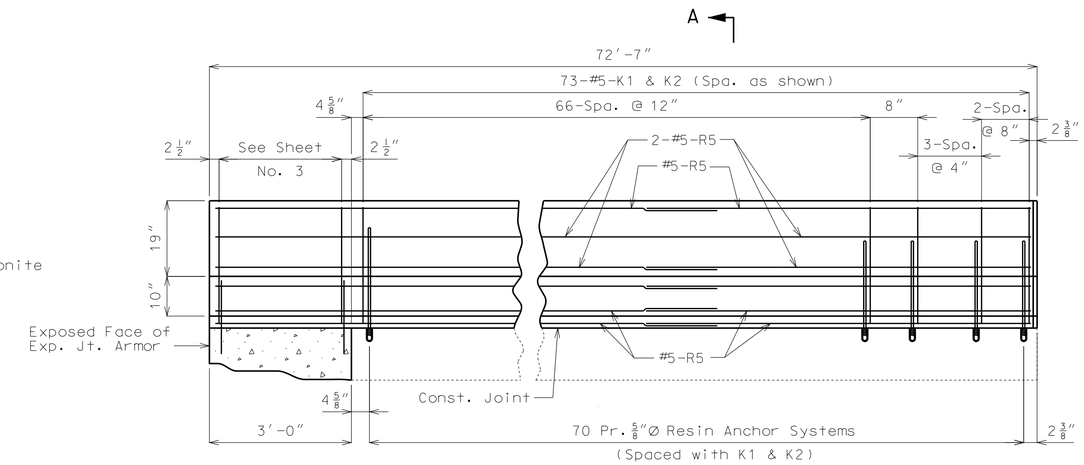

SECTION NEAR LEFT SAFETY BARRIER CURB

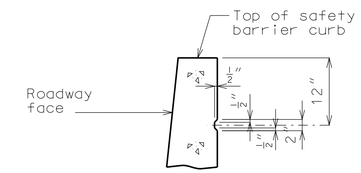

PART SECTION SHOWING RUSTICATION DETAILS

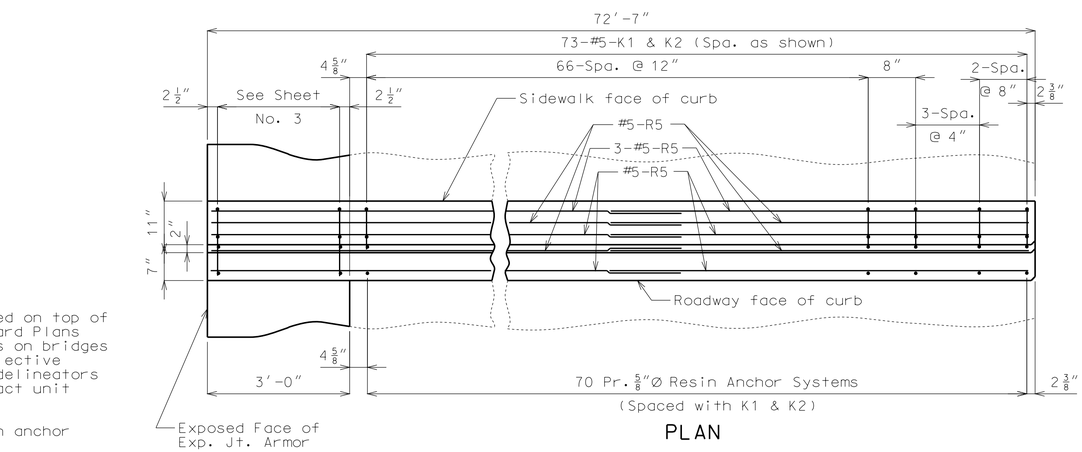

PLAN

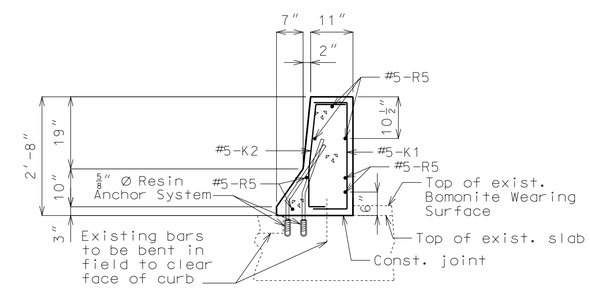

SECTION A-A

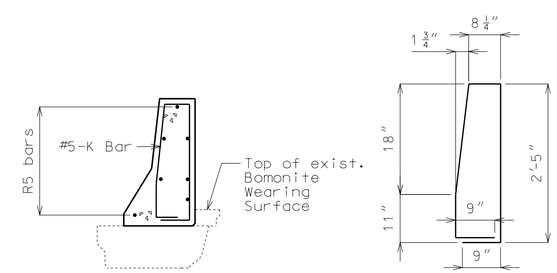

(Resin Anchor Systems not shown for clarity)

K1-K2 BAR PERMISSIBLE ALTERNATE SHAPE (✱✱✱)

(✱✱✱) The K1 and K2 bar combination may be furnished as one bar as shown, at the contractor's option.

Notes:

Use a minimum lap of 2'-11" between R5 bars.

Concrete traffic barrier delineators shall be placed on top of the safety barrier curb as shown on Missouri Standard Plans 617.10 and in accordance with Sec 617. Delineators on bridges with two-lane, two-way traffic shall have retroreflective sheeting on both sides. Concrete traffic barrier delineators will be considered completely covered by the contract unit price for Safety Barrier Curb.

The contractor shall use one of the qualified resin anchor systems in accordance with Sec 1039.

Cost of furnishing and installing the resin anchor system complete-in-place will be considered completely covered by the contract unit price for Safety Barrier Curb.

The minimum embedment depth in concrete with f'c = 4,000 psi for the resin anchor system shall be that required to meet the minimum ultimate pullout strength in accordance with Sec 1039 but shall not be less than 5".

An epoxy coated #5 Grade 60 reinforcing bar 2'-3" long shall be substituted for the 5/8"Ø threaded rod.

Top of safety barrier curb shall be built parallel to grade with barrier curb joints (except at end bents) normal to grade.

All exposed edges of safety barrier curb shall have either a 1/2" radius or a 3/8" bevel, unless otherwise noted.

Payment for all concrete and reinforcement, complete in place, will be considered completely covered by the contract unit price for Safety Barrier Curb per linear foot.

Concrete in the safety barrier curb shall be Class B-1.

Measurement of safety barrier curb is to the nearest linear foot, measured along the outside top of slab from end of curb to end of curb.

The cross-sectional area for each curb above the slab = 3.17 sq. ft.

Longitudinal dimensions are horizontal.

DETAILS OF LEFT SAFETY BARRIER CURB AT ABUTMENT NO. 2

Detailed Aug. 2013
Checked Sep. 2013

Note: This drawing is not to scale. Follow dimensions.

"THIS MEDIA SHOULD NOT BE CONSIDERED A CERTIFIED DOCUMENT."

DATE PREPARED	
12/16/2013	
ROUTE	STATE
I-670	MO
DISTRICT	SHEET NO.
BR	10
COUNTY	
JACKSON	
JOB NO.	
J4P2191	
CONTRACT ID.	
PROJECT NO.	
BRIDGE NO.	
A31412	

DATE	DESCRIPTION

MISSOURI HIGHWAYS AND TRANSPORTATION COMMISSION
105 WEST CAPITOL
JEFFERSON CITY, MO 65102
1-888-ASK-MODOT (1-888-275-6636)

IF A SEAL IS PRESENT ON THIS SHEET IT HAS BEEN ELECTRONICALLY SEALED AND DATED.

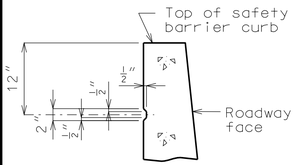

PART SECTION SHOWING RUSTICATION DETAILS

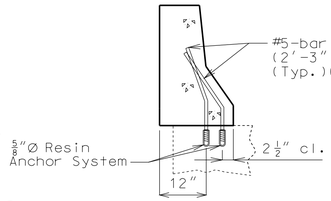

ANCHOR SYSTEMS AT SECTION A-A, B-B & C-C

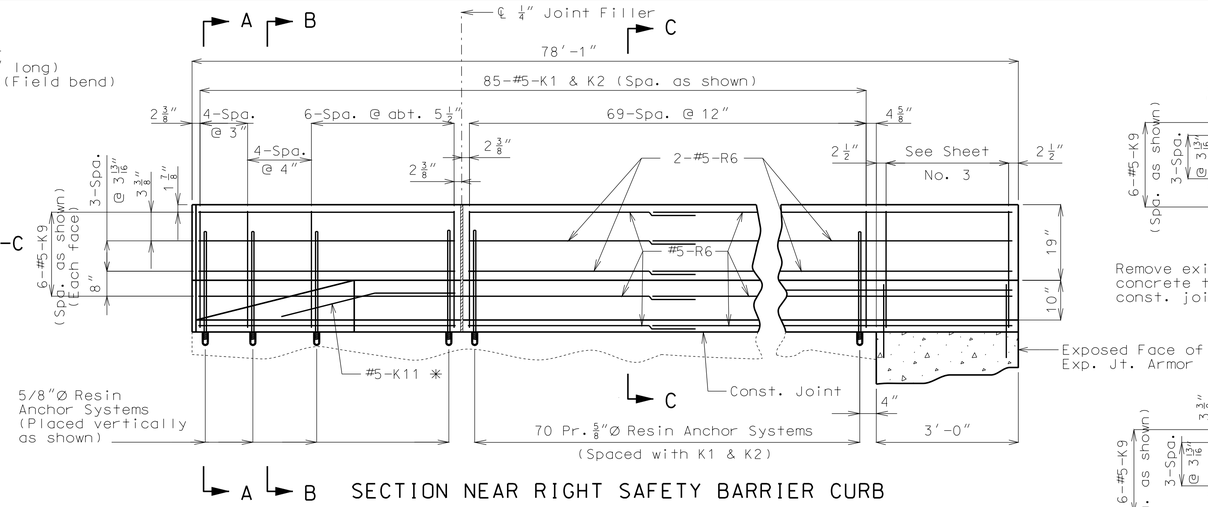

SECTION NEAR RIGHT SAFETY BARRIER CURB

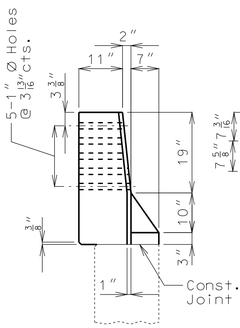

PART ELEVATION J-J

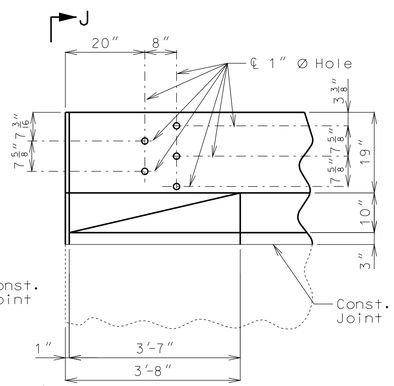

PART ELEVATION

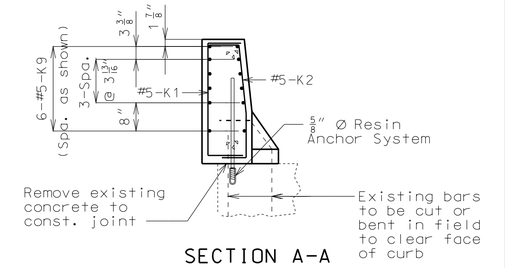

SECTION A-A

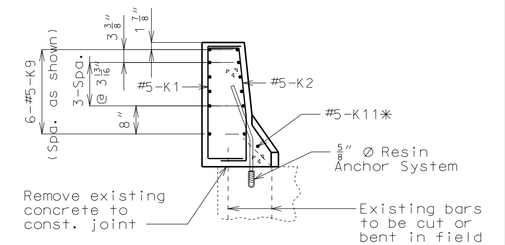

SECTION B-B

✱ Fit bar to follow transition face of curb.

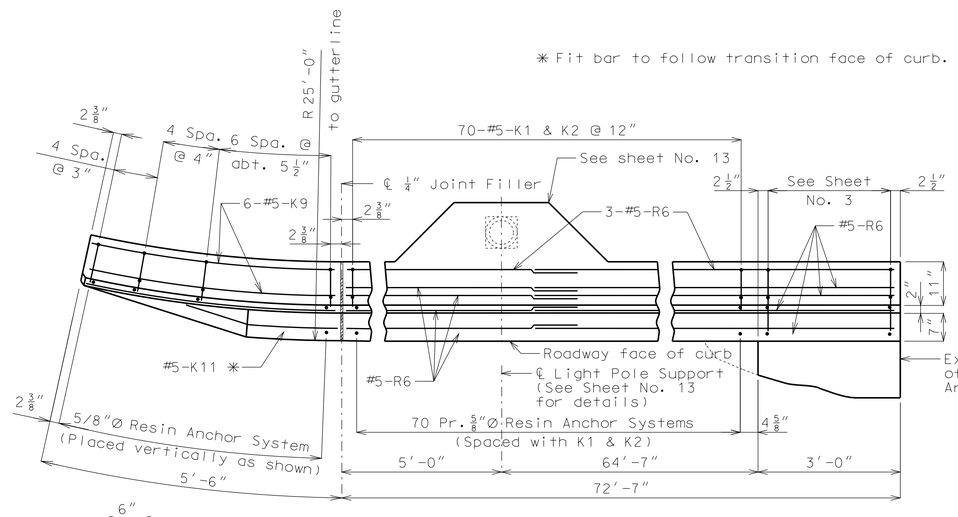

PLAN

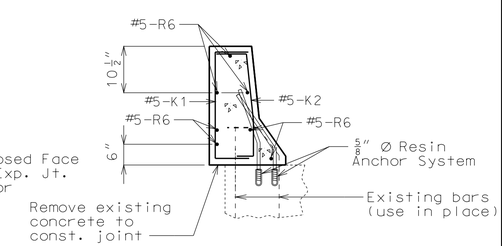

SECTION C-C

Notes:

Use a minimum lap of 2'-11" between R6 bars.

Concrete traffic barrier delineators shall be placed on top of the safety barrier curb as shown on Missouri Standard Plans 617.10 and in accordance with Sec 617. Delineators on bridges with two-lane, two-way traffic shall have retroreflective sheeting on both sides. Concrete traffic barrier delineators will be considered completely covered by the contract unit price for Safety Barrier Curb.

The contractor shall use one of the qualified resin anchor systems in accordance with Sec 1039.

Cost of furnishing and installing the resin anchor system complete-in-place will be considered completely covered by the contract unit price for Safety Barrier Curb.

The minimum embedment depth in concrete with f'c = 4,000 psi for the resin anchor system shall be that required to meet the minimum ultimate pullout strength in accordance with Sec 1039 but shall not be less than 5".

An epoxy coated #5 Grade 60 reinforcing bar 2'-3" long shall be substituted for the 5/8"Ø threaded rod.

Top of safety barrier curb shall be built parallel to grade with barrier curb joints (except at end bents) normal to grade.

All exposed edges of safety barrier curb shall have either a 1/2" radius or a 3/8" bevel, unless otherwise noted.

Payment for all concrete and reinforcement, complete in place, will be considered completely covered by the contract unit price for Safety Barrier Curb per linear foot.

Concrete in the safety barrier curb shall be Class B-1.

Measurement of safety barrier curb is to the nearest linear foot, measured along the outside top of slab from end of curb to end of curb.

The cross-sectional area for each curb above the slab = 3.17 sq. ft.

Longitudinal dimensions are horizontal.

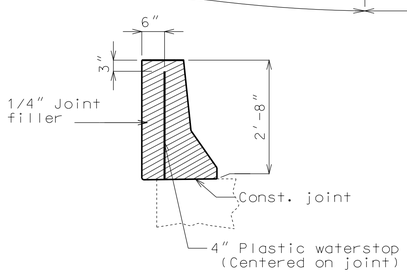

DETAILS OF PLASTIC WATERSTOP

Notes:

Plastic waterstop shall be placed in all safety barrier curb filled joints.

Cost of plastic waterstop, complete in place, will be considered completely covered by the contract unit price for Safety Barrier Curb.

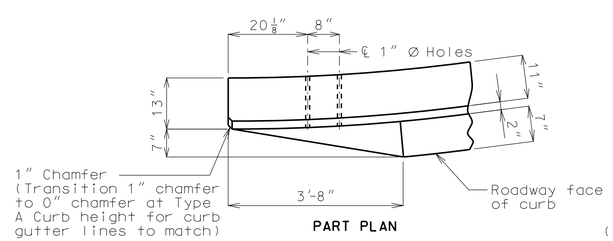

PART PLAN

DETAILS OF GUARD RAIL ATTACHMENT

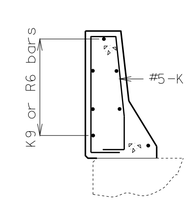

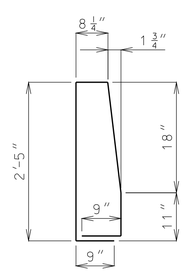

(Resin Anchor Systems not shown for clarity)

K1-K2 BAR PERMISSIBLE ALTERNATE SHAPE (✱✱✱)

(✱✱✱) The K1 and K2 bar combination may be furnished as one bar as shown, at the contractor's option.

DETAILS OF RIGHT SAFETY BARRIER CURB AT ABUTMENT NO. 2

Detailed Aug. 2013
Checked Sep. 2013

Note: This drawing is not to scale. Follow dimensions.

"THIS MEDIA SHOULD NOT BE CONSIDERED A CERTIFIED DOCUMENT."

DATE PREPARED	
12/16/2013	
ROUTE	STATE
I-670	MO
DISTRICT	SHEET NO.
BR	11
COUNTY	
JACKSON	
JOB NO.	
J4P2191	
CONTRACT ID.	
PROJECT NO.	
BRIDGE NO.	
A31412	

DESCRIPTION	DATE

MISSOURI HIGHWAYS AND TRANSPORTATION COMMISSION
105 WEST CAPITOL
JEFFERSON CITY, MO 65102
1-888-ASK-MODOT (1-888-275-6636)

IF A SEAL IS PRESENT ON THIS SHEET IT HAS BEEN ELECTRONICALLY SEALED AND DATED.

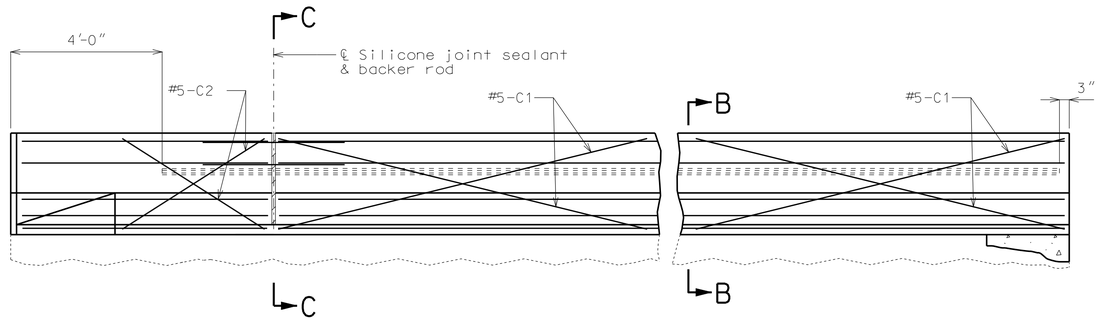

SECTION NEAR RIGHT SAFETY BARRIER CURB
(OPTIONAL SLIP-FORM BRIDGE SAFETY BARRIER CURB)

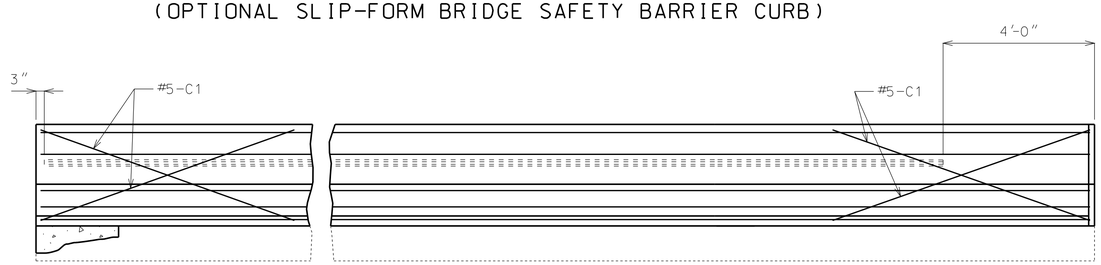

SECTION NEAR LEFT SAFETY BARRIER CURB
(OPTIONAL SLIP-FORM BRIDGE SAFETY BARRIER CURB)

Notes:

Top of safety barrier curb shall be built parallel to grade with barrier curb joints (except at end bents) normal to grade.

Payment for all concrete and reinforcement, complete in place, will be considered completely covered by the contract unit price for Safety Barrier Curb per linear foot.

Concrete in the safety barrier curb shall be Class B-1.

Measurement of safety barrier curb is to the nearest linear foot, measured along the outside top of curb from end of curb to end of curb.

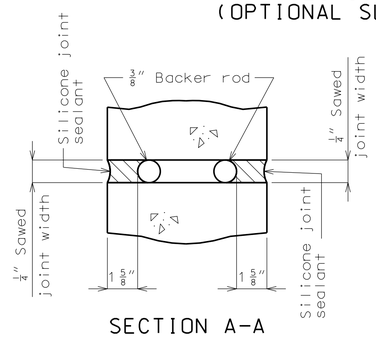

SECTION A-A

Note:

Cost of silicone joint sealant and backer rod, complete in place, will be considered completely covered by the contract unit price for Safety Barrier Curb.

Notes:

Joint sealant and backer rods shall be used on all slip-form barrier curbs instead of joint filler and shall be in accordance with Sec 717 for silicone joint sealant for saw cut and formed joints.

Plastic waterstop shall not be used with slip-form option.

C Bars (Slip-form option only) shall be used in addition to cast-in-place conventional forming reinforcement for bridge safety barrier curb.

For Slip-Form option, all sides of the safety barrier curb shall have a vertically broomed finish and the curb top shall have a transversely broomed finish.

Concrete traffic barrier delineators shall be placed on top of the safety barrier curb as shown on Missouri Standard Plans 617.10 and in accordance with Sec 617. Delineators on bridges with two-lane, two-way traffic shall have retroreflective sheeting on both sides. Concrete traffic barrier delineators will be considered completely covered by the contract unit price for Safety Barrier Curb.

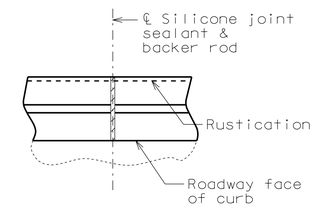

PART PLAN SHOWING SAFETY BARRIER CURB JOINT

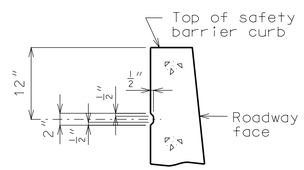

PART SECTION SHOWING RUSTICATION DETAILS

RUSTICATION DETAIL

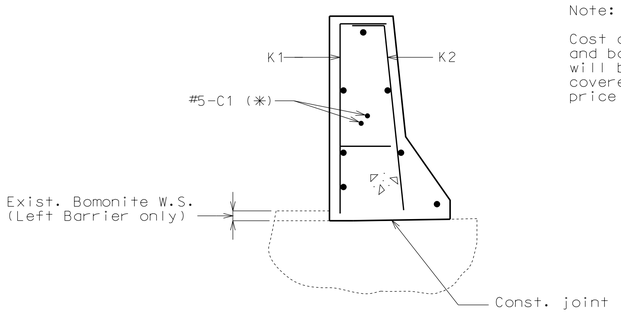

PART SECTION B-B

Notes:

(✳) Each side of joint location.

Resin Anchor Systems not shown for clarity.

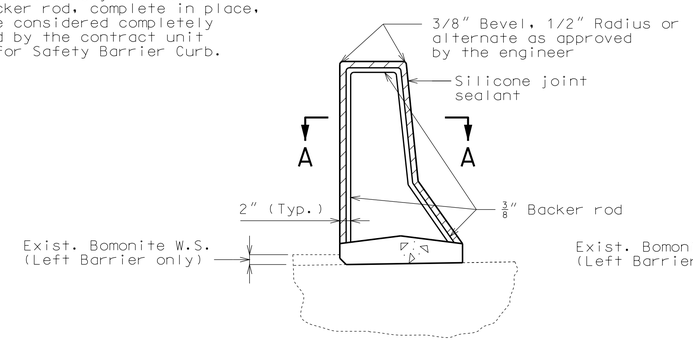

SECTION THRU JOINT

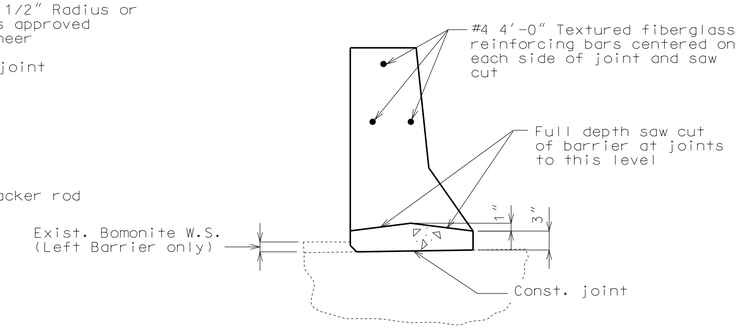

PART SECTION C-C

OPTIONAL SLIP-FORM BRIDGE SAFETY BARRIER CURB AT ABUTMENT NO. 2

Detailed Oct. 2013
Checked Oct. 2013

Note: This drawing is not to scale. Follow dimensions.

"THIS MEDIA SHOULD NOT BE CONSIDERED A CERTIFIED DOCUMENT."

DATE PREPARED	
12/16/2013	
ROUTE	STATE
I-670	MO
DISTRICT	SHEET NO.
BR	12
COUNTY	
JACKSON	
JOB NO.	
J4P2191	
CONTRACT ID.	
PROJECT NO.	
BRIDGE NO.	
A31412	

DATE	DESCRIPTION

IF A SEAL IS PRESENT ON THIS SHEET IT HAS BEEN ELECTRONICALLY SEALED AND DATED.

MISSOURI HIGHWAYS AND TRANSPORTATION COMMISSION
105 WEST CAPITOL
JEFFERSON CITY, MO 65102
1-888-ASK-MODOT (1-888-275-6636)

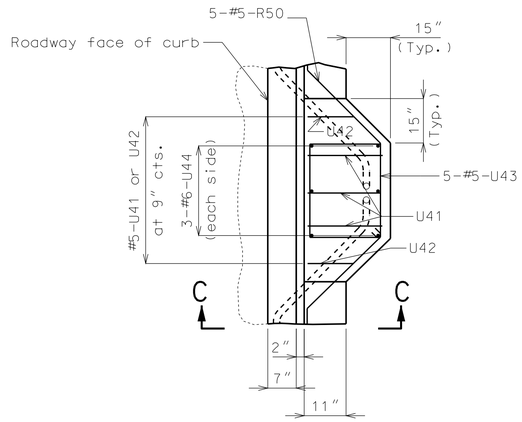

PART PLAN SHOWING
REINFORCEMENT

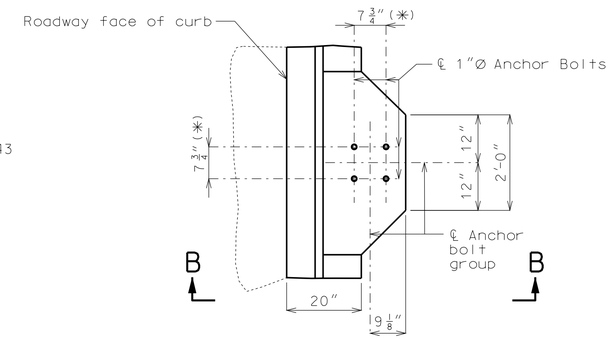

PART PLAN SHOWING
GENERAL LAYOUT

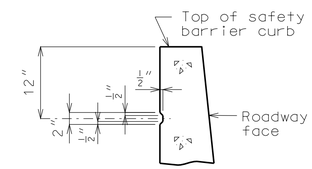

PART SECTION SHOWING
RUSTICATION DETAILS

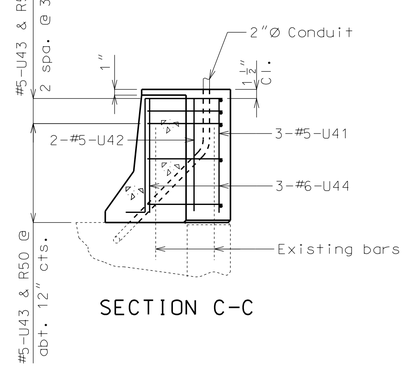

SECTION C-C

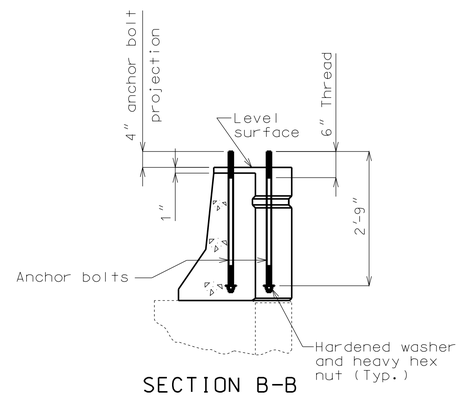

SECTION B-B

LIGHT POLE MOUNTING
(RIGHT BARRIER CURB)

Notes:

All conduit to be rigid galvanized steel with 3" minimum cover in concrete.

Shift reinforcing steel in field where necessary to clear conduit.

Top of light standard support shall be made horizontal, anchor bolts to be placed vertically.

Anchor bolts and nuts shall be 1"Ø ASTM F1554 Grade 55. Anchor bolts, nuts and washers shall be fully galvanized.

Remove and Reinstall light pole. (Roadway Item).

Cost of anchor bolts, nuts and washers, concrete and reinforcing will be considered completely covered by the contract unit price for Safety Barrier Curb per linear foot.

Resin Anchors Systems not shown for clarity.

See Missouri Standard Plans drawing 901.00 for details not shown.

(*) Match existing anchor bolt pattern.

DETAILS OF LIGHT POLE SUPPORT ON RIGHT SAFETY BARRIER CURB

Detailed Oct. 2013
Checked Oct. 2013

Note: This drawing is not to scale. Follow dimensions.

"THIS MEDIA SHOULD NOT BE CONSIDERED A CERTIFIED DOCUMENT."

DATE PREPARED	12/16/2013
ROUTE	I-670
STATE	MO
DISTRICT	BR
SHEET NO.	13
COUNTY	JACKSON
JOB NO.	J4P2191
CONTRACT ID.	
PROJECT NO.	
BRIDGE NO.	A31412

DATE	DESCRIPTION

MISSOURI HIGHWAYS AND TRANSPORTATION COMMISSION
105 WEST CAPITOL
JEFFERSON CITY, MO 65102
1-888-ASK-MODOT (1-888-275-6636)

IF A SEAL IS PRESENT ON THIS SHEET IT HAS BEEN ELECTRONICALLY SEALED AND DATED.

BILL OF REINFORCING STEEL

NO. REQ'D.	MARK NO. SIZE	MARK NO. MARK	LOCATION	EPOXY (E)	SHAPE NO.	STIRRUP (S)	SUBSTR. (X)	VARIES (V)	NO. EACH	B FT.	B IN.	C FT.	C IN.	D FT.	D IN.	E FT.	E IN.	F FT.	F IN.	H FT.	H IN.	K FT.	K IN.	NOMINAL LENGTH FT.	NOMINAL LENGTH IN.	ACTUAL LENGTH FT.	ACTUAL LENGTH IN.	WEIGHT LBS.
			SLAB																									
40	5	S1	SLAB	E	20					31	6.000													31	6	31	6	1314
196	5	S2	SLAB	E	20					2	8.000													2	8	2	8	545
14	4	S3	SLAB	E	20					31	3.000													31	3	31	3	292
32	5	R1	BARRIER CURB	E	14	S				2	6.000	8.250		2	6.125					2	6.000	3.000		5	8	5	6	184
32	5	R3	BARRIER CURB	E	19	S					17.000	10.000												2	3	2	2	72
32	5	R4	BARRIER CURB	E	27	S						10.000		11.125		7.000		12.000		9.125		6.375		3	4	3	2	106
16	5	R5	BARRIER CURB	E	20					37	9.000													37	9	37	9	630
14	5	R6	BARRIER CURB	E	20					37	9.000													37	9	37	9	551
158	5	K1	BARRIER CURB	E	11	S				2	5.000	9.000		2	5.000	16.000								9	4	8	11	1469
158	5	K2	BARRIER CURB	E	27	S					9.000	11.125		18.000		8.000				2.000		17.875		3	10	3	8	604
12	5	K9	BARRIER CURB	E	20					5	3.000													5	3	5	3	66
8	5	C1	SLIP FORM	E	20					10	0.000													10	0	10	0	83
2	5	C2	SLIP FORM	E	20					3	0.000													3	0	3	0	6
3	5	U41	LIGHT SUPPOR	E	10	S					6.000	2	5.500		22.000									7	3	6	11	22
2	5	U42	LIGHT SUPPOR	E	10	S					6.000	2	5.500		15.250									6	8	6	5	13
5	5	U43	LIGHT SUPPOR	E	13	S					22.500		22.500		22.500		22.500							8	5	8	1	42
8	6	U44	LIGHT SUPPOR	E	20					2	5.000													2	5	2	5	29
5	5	R50	LIGHT SUPPOR	E	30						18.000	2	7.875		22.500	2	7.875		18.000		22.500		22.500	10	2	10	2	53
			TOTALS																									
	4			E																								292
	5			E																								5760
	6			E																								29
			TOTAL																									0
			TOTAL	E																								6081
			Slab on Girder																									
	4			E																								292
	5			E																								1989
	6			E																								29
			TOTAL																									2310
			Safety Barrier Curb																									
	5			E																								3682
			TOTAL																									3682
			Slip Form Option																									
	5			E																								89
			TOTAL																									89

BILL OF REINFORCING STEEL

NO. REQ'D.	MARK NO. SIZE	MARK NO. MARK	LOCATION	EPOXY (E)	SHAPE NO.	STIRRUP (S)	SUBSTR. (X)	VARIES (V)	NO. EACH	B FT.	B IN.	C FT.	C IN.	D FT.	D IN.	E FT.	E IN.	F FT.	F IN.	H FT.	H IN.	K FT.	K IN.	NOMINAL LENGTH FT.	NOMINAL LENGTH IN.	ACTUAL LENGTH FT.	ACTUAL LENGTH IN.	WEIGHT LBS.

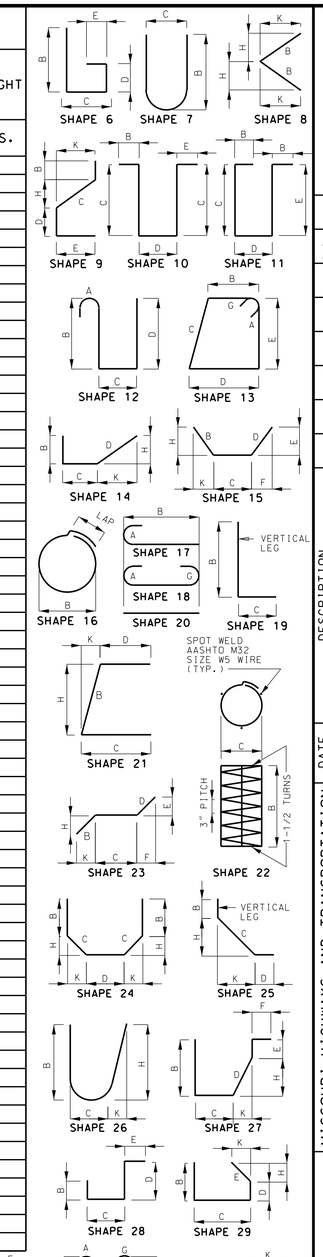

"THIS MEDIA SHOULD NOT BE CONSIDERED A CERTIFIED DOCUMENT."

DATE PREPARED	12/16/2013
ROUTE	I-670
STATE	MO
DISTRICT	BR
SHEET NO.	14
COUNTY	JACKSON
JOB NO.	J4P2191
CONTRACT ID.	
PROJECT NO.	
BRIDGE NO.	A31412

DESCRIPTION	DATE

MISSOURI HIGHWAYS AND TRANSPORTATION COMMISSION

105 WEST CAPITOL
JEFFERSON CITY, MO 65102
1-888-ASK-MODOT (1-888-275-6636)

IF A SEAL IS PRESENT ON THIS SHEET IT HAS BEEN ELECTRONICALLY SEALED AND DATED.

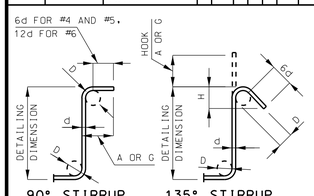

STIRRUP HOOK DIMENSIONS				
GRADES 40 - 50 - 60 KSI				
BAR SIZE	D (IN.)	90° HOOK	135° HOOK	
		HOOK A OR G	HOOK A OR G	APPROX. H
#4	2"	4 1/2"	4 1/2"	3"
#5	2 1/2"	6"	5 1/2"	3 3/4"
#6	4 1/2"	12"	8"	4 1/2"

NOTE: UNLESS OTHERWISE NOTED DIAMETER "D" IS THE SAME FOR ALL BENDS AND HOOKS ON A BAR.

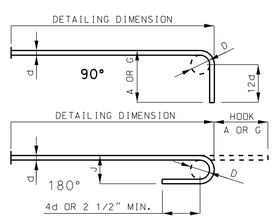

END HOOK DIMENSIONS				
BAR SIZE	D (IN.)	ALL GRADES		
		180° HOOKS		90° HOOKS
		A OR G	J	A OR G
#3	2 1/4"	5"	3"	6"
#4	3"	6"	4"	8"
#5	3 3/4"	7"	5"	10"
#6	4 1/2"	8"	6"	12"
#7	5 1/4"	10"	7"	14"
#8	6"	11"	8"	16"
#9	9 1/2"	15"	11 3/4"	19"
#10	10 3/4"	17"	13 1/4"	22"
#11	12"	19"	14 3/4"	2'-0"
#14	18 1/4"	2'-3"	21 3/4"	2'-7"

TWO ADDITIONAL #4-S3, #5-R5 & #6-U44 ARE INCLUDED IN THE BAR BILL FOR TESTING.

NOTE:
ALL STANDARD HOOKS AND BENDS OTHER THAN 180 DEGREE ARE TO BE BENT WITH SAME PROCEDURE AS FOR 90 DEGREE STANDARD HOOKS.
HOOKS AND BENDS SHALL BE IN ACCORDANCE WITH THE PROCEDURES AS SHOWN ON THIS SHEET.
E = EPOXY COATED REINFORCEMENT.
S = STIRRUP.
X = BAR IS INCLUDED IN SUBSTRUCTURE QUANTITIES.
V = BAR DIMENSIONS VARY IN EQUAL INCREMENTS BETWEEN DIMENSIONS SHOWN ON THIS LINE AND THE FOLLOWING LINE.
NO. EA. = NUMBER OF BARS OF EACH LENGTH.
NOMINAL LENGTHS ARE BASED ON OUT TO OUT DIMENSIONS SHOWN IN BENDING DIAGRAMS AND ARE LISTED FOR FABRICATORS USE. (NEAREST INCH)
ACTUAL LENGTHS ARE MEASURED ALONG CENTERLINE BAR TO THE NEAREST INCH.
PAYWEIGHTS ARE BASED ON ACTUAL LENGTHS.
FOUR ANGLE OR CHANNEL SPACERS ARE REQUIRED FOR EACH COLUMN SPIRAL. SPACERS ARE TO BE PLACED ON INSIDE OF SPIRALS. LENGTH AND WEIGHT OF COLUMN SPIRALS DO NOT INCLUDE SPLICES OR SPACERS.
REINFORCING STEEL (GRADE 60) FY = 60,000 PSI.

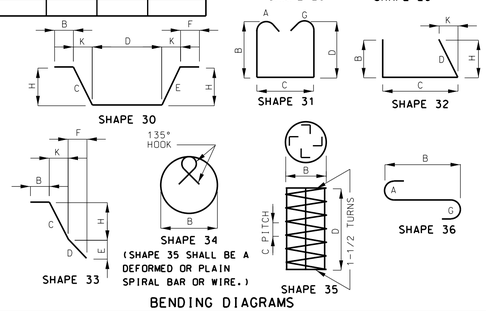

BENDING DIAGRAMS

Detailed Nov. 2013
Checked Nov. 2013

Note: This drawing is not to scale. Follow dimensions.

SEC/SUR 24 TWP 49N RGE 32W

MISSOURI HIGHWAYS AND TRANSPORTATION COMMISSION

U.I.P. AND REHABILITATE EXISTING (98'-106') CONTINUOUS COMPOSITE PLATE GIRDER SPANS (1°15'00" L.A.)

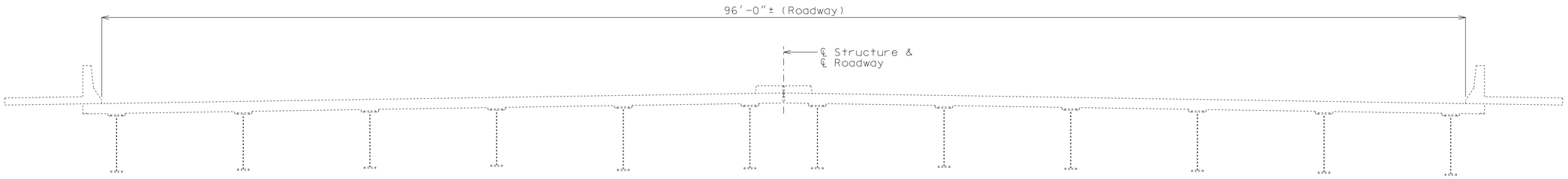

TYPICAL SECTION THRU SLAB

Note: Existing fence not shown for clarity.

GENERAL NOTES:

Design Specifications:

2002 - AASHTO LFD (17th Edition) Standard Specifications
Bridge Deck Rating = 7

Design Loading:

HS20-44 (1977 & New Construction)
Military 24,000# Tandem Axle

Design Unit Stresses:

Class B-1 Concrete (Slab & Safety Barrier Curb) f'c = 4,000 psi

Reinforcing Steel (Grade 60) fy = 60,000 psi

Reinforcing Steel:

Minimum clearance to reinforcing steel shall be 1½", unless otherwise shown.

Expansion Joints:

The concrete for slab, barrier curb and raised median curb replacement shall be Class B-1.

Payment for backwall and slab concrete, complete-in-place, for expansion joint replacement will be considered completely covered by the contract unit price for Class B-1 concrete per cu. yard.

Payment for furnishing and installing slab and backwall reinforcing steel, complete-in-place, for expansion joint replacement will be considered completely covered by the contract unit price for Reinforcing Steel (Epoxy Coated).

Concrete Protective Coatings:

Protective coating for concrete bents and piers (Epoxy) shall be applied as shown on the bridge plans and in accordance with Sec 711.

Miscellaneous:

Bars bonded in old concrete not removed shall be cleanly stripped and embedded into new concrete where possible. If length is available, old bars shall extend into new concrete at least 40 diameters for smooth bars and 30 diameters for deformed bars, unless otherwise noted.

Outline of old work is indicated by light dashed lines. Heavy lines indicate new work.

Contractor shall verify all dimensions in field before ordering new material.

The area exposed by the removal of concrete and not covered with new concrete shall be coated with an approved qualified special mortar in accordance with Sec 704.

The existing skid plates on the sidewalk shall be reinstalled with ⅜"Ø diameter counter sunk cone expansion anchors and they shall have a minimum ultimate pullout strength of 3900 lbs. in concrete with f'c= 4,000 psi.

Cost of reinstalling existing skid plates with ⅜"Ø diameter cone expansion anchors will be considered incidental to other pay items.

Traffic Handling:

See Sheet No. 2 for Details of Stage Construction and Roadway Plans for Traffic Control.

Estimated Quantities

Item		Total
Removal of Existing Expansion Joints & Adjacent Concrete	linear foot	192
Remove and Replace Barrier Curb	linear foot	12
Remove and Replace Raised Median Curb	sq. foot	24
Class B-1 Concrete	cu. yard	18.3
Reinforcing Steel (Epoxy Coated)	pound	1280
Protective Coating - Concrete Bents & Piers (Epoxy)	lump sum	1
Strip Seal Expansion Joint System	linear foot	192

REPAIRS TO BRIDGE: LEE'S SUMMIT ROAD OVER I-70

STATE ROAD FROM I-435 TO I-470

ABOUT 5.8 MILES EAST OF I-435

STA. 623+29.03± (MATCH EXIST.)

STD. 617.20

STD. 706.35

Detailed Aug. 2013
Checked Sep. 2013

Note: This drawing is not to scale. Follow dimensions.

"THIS MEDIA SHOULD NOT BE CONSIDERED A CERTIFIED DOCUMENT."

DATE PREPARED 10/24/2013

ROUTE I-70 | STATE MO

DISTRICT BR | SHEET NO. 1

COUNTY JACKSON

JOB NO. J4P2191

CONTRACT ID.

PROJECT NO.

BRIDGE NO. A37631

DATE	DESCRIPTION

IF A SEAL IS PRESENT ON THIS SHEET IT HAS BEEN ELECTRONICALLY SEALED AND DATED.

MISSOURI HIGHWAYS AND TRANSPORTATION COMMISSION
105 WEST CAPITOL
JEFFERSON CITY, MO 65102
1-888-ASK-MODOT (1-888-275-6636)

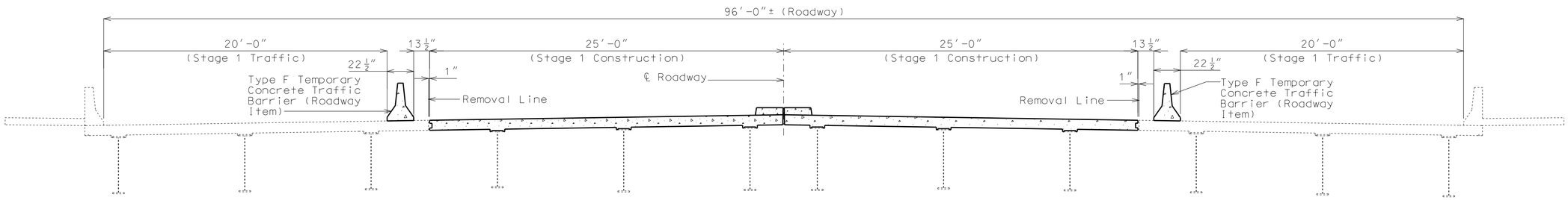

STAGE 1 CONSTRUCTION

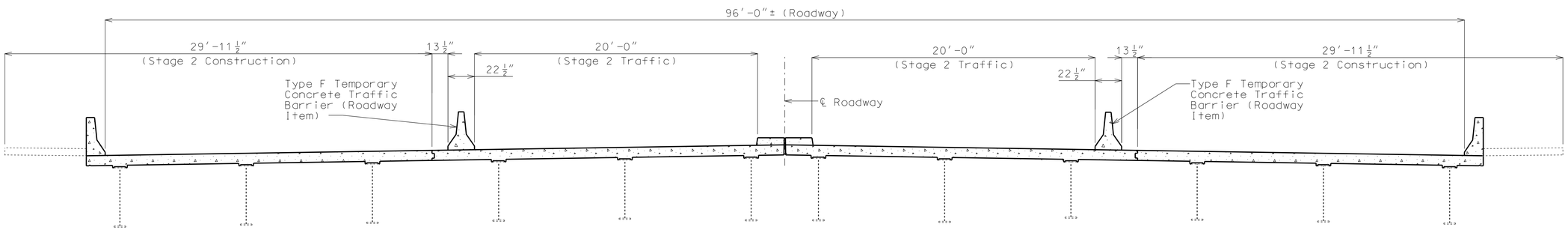

STAGE 2 CONSTRUCTION

Note:

Method of attachment for the Type F Temporary Barrier shall be the Tie-Down Strap.

DETAILS OF STAGE CONSTRUCTION AT EXPANSION JOINTS

Detailed Aug. 2013
Checked Sep. 2013

Note: This drawing is not to scale. Follow dimensions.

"THIS MEDIA SHOULD NOT BE CONSIDERED A CERTIFIED DOCUMENT."

DATE PREPARED	10/24/2013
ROUTE	I-70
STATE	MO
DISTRICT	BR
SHEET NO.	2
COUNTY	JACKSON
JOB NO.	J4P2191
CONTRACT ID.	
PROJECT NO.	
BRIDGE NO.	A37631

DATE	DESCRIPTION

IF A SEAL IS PRESENT ON THIS SHEET IT HAS BEEN ELECTRONICALLY SEALED AND DATED.

MISSOURI HIGHWAYS AND TRANSPORTATION COMMISSION
105 WEST CAPITOL
JEFFERSON CITY, MO 65102
1-888-ASK-MODOT (1-888-275-6636)

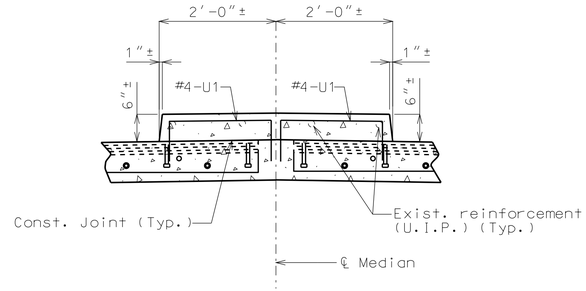

SECTION C-C

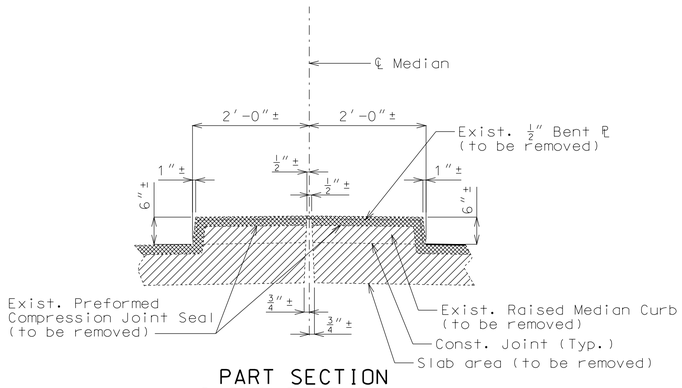

PART SECTION
SHOWING REMOVAL

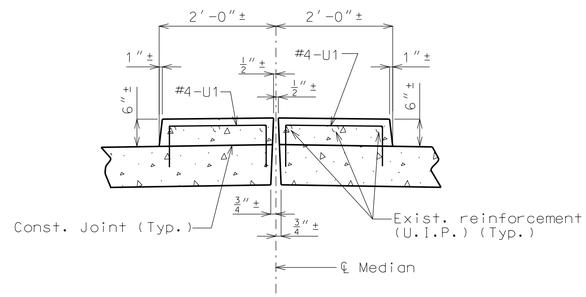

SECTION A-A

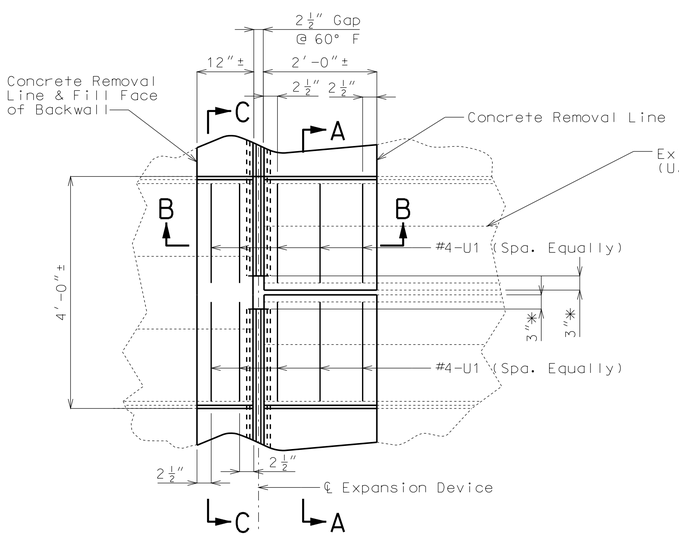

PART PLAN OF
RAISED MEDIAN CURB

✳ Limits of Strip Seal Expansion Joint System

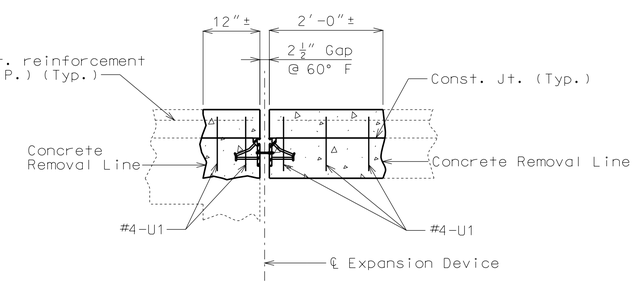

SECTION B-B

Note: Strip seal gland not shown for clarity.

Notes:

Payment for curb concrete removal and all concrete and reinforcement for raised median curb, complete-in-place, will be considered completely covered by the contract unit price for Remove and Replace Raised Median Curb per sqaure foot.

All exposed edges of new curb shall match existing curb.

For details of strip seal expansion joint system, see Sheet No. 4.

DETAILS OF RAISED MEDIAN CURB
REMOVAL AND REPLACEMENT

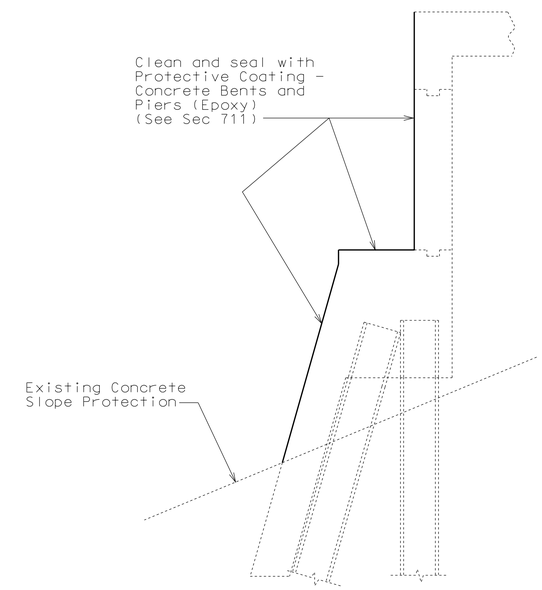

PART SECTION SHOWING
PROTECTIVE COATING AT
ABUTMENTS NO. 1 & 3

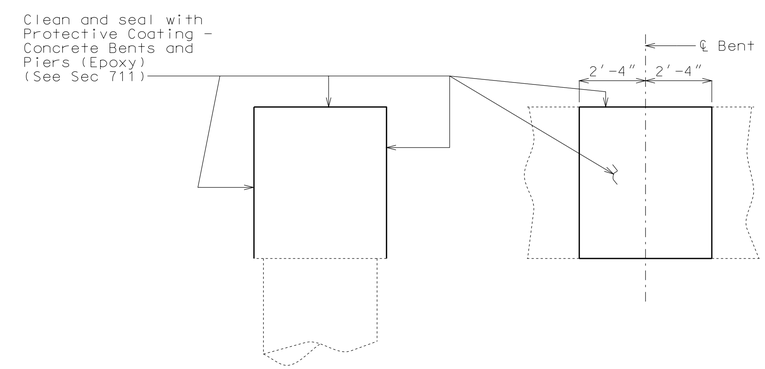

SIDE ELEVATION FRONT ELEVATION

DETAILS SHOWING
PROTECTIVE COATING AT
INTERMEDIATE BENT NO. 2

"THIS MEDIA SHOULD NOT BE CONSIDERED A CERTIFIED DOCUMENT."

DATE PREPARED	
10/24/2013	
ROUTE	STATE
I-70	MO
DISTRICT	SHEET NO.
BR	3
COUNTY	
JACKSON	
JOB NO.	
J4P2191	
CONTRACT ID.	
PROJECT NO.	
BRIDGE NO.	
A37631	

DATE	DESCRIPTION

MISSOURI HIGHWAYS AND TRANSPORTATION COMMISSION

105 WEST CAPITOL
JEFFERSON CITY, MO 65102
1-888-ASK-MODOT (1-888-275-6636)

IF A SEAL IS PRESENT ON THIS SHEET IT HAS BEEN ELECTRONICALLY SEALED AND DATED.

Detailed Aug. 2013
Checked Sep. 2013

Note: This drawing is not to scale. Follow dimensions.

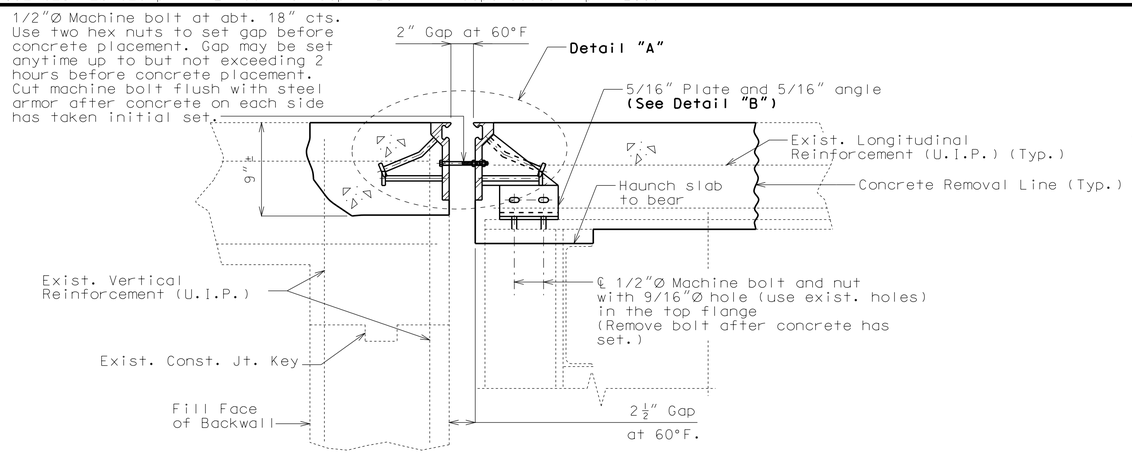

SECTION D-D

Notes: Strip seal gland not shown for clarity.
New reinforcement not shown for clarity.

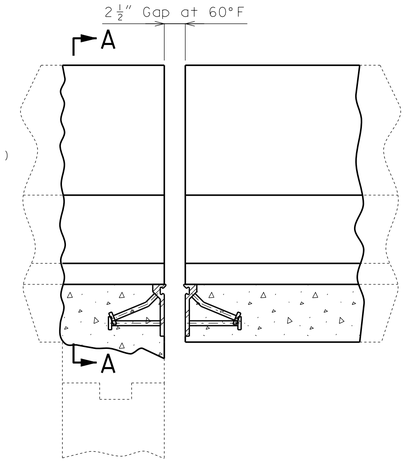

Note: Strip seal gland not shown for clarity.

PART ELEVATION OF BARRIER CURB

GENERAL NOTES:

Expansion joint system shall be fabricated in one section, except for stage construction and when the length is over 50 feet. A complete joint penetration groove welded splice shall be required. Welds shall be ground flush to provide a smooth surface. The expansion joint system shall be fabricated and installed to the crown and grade of the roadway.

The strip seal gland shall be installed in joints in one continuous piece without field splices. Factory splicing will be permitted for joints in excess of 53 feet.

Structural steel for the expansion joint system shall be ASTM A709 Grade 36 except the steel armor may be ASTM A709 Grade 50W. Anchors for the expansion joint system shall be in accordance with Sec 1037. Strip seal expansion joint system shall be in accordance with Sec 717.

Structural steel for the expansion joint system shall be coated with a minimum of two coats of inorganic zinc primer (5 mils minimum) or galvanized in accordance with ASTM A123. Anchors need not be protected from overspray.

Plan dimensions are based on installation at 60°F. The expansion gap and other dimensions shall be increased or decreased 1/16" for each 10° fall or rise in temperature at installation.

Longitudinal reinforcing steel shall be cut/bent so that ends shall not be more than ±1" from vertical leg of the steel armor at the expansion joint system.

Concrete shall be forced under and around steel armor and anchors. Proper consolidation of the concrete shall be achieved by localized internal vibration.

For details of Removal and Replacement of Raised Median Curb at Abutments No. 1 & 3. see Sheet No. 3.

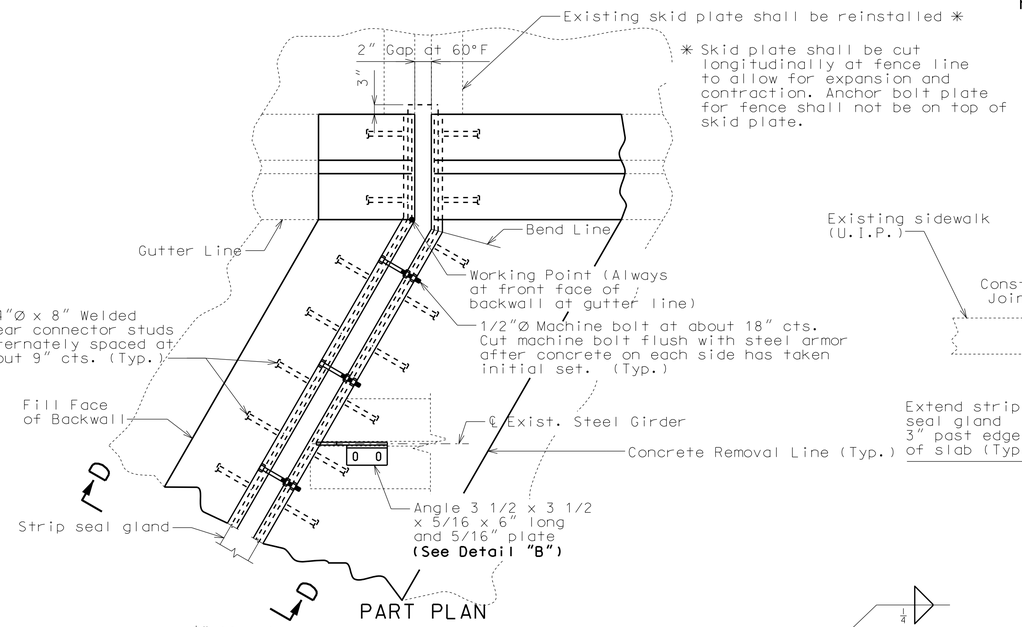

PART PLAN

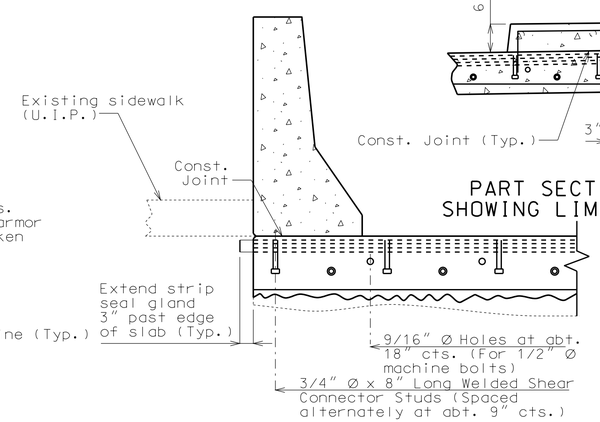

PART SECTION A-A

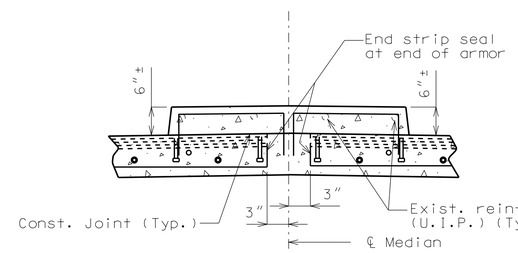

PART SECTION THRU MEDIAN SHOWING LIMITS OF STRIP SEAL

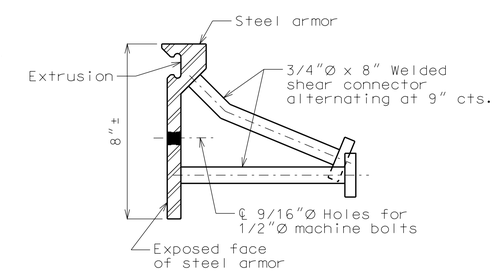

DETAIL OF JOINT ARMOR

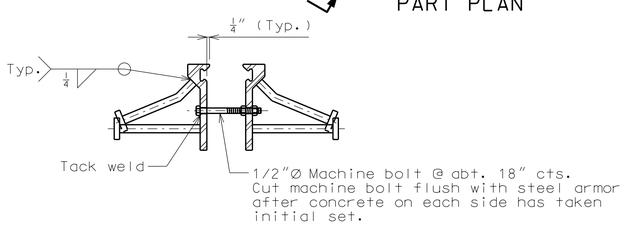

DETAIL "A"

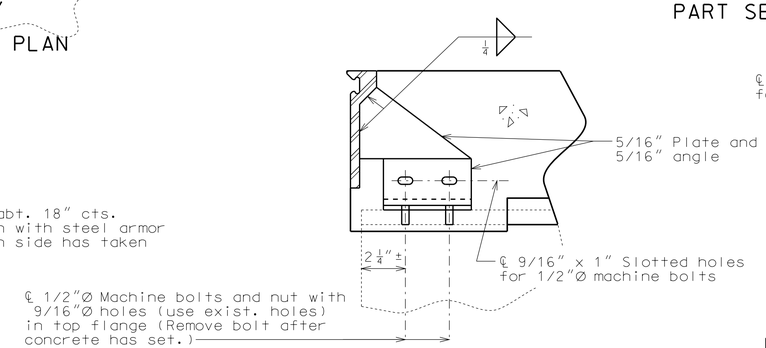

DETAIL "B"

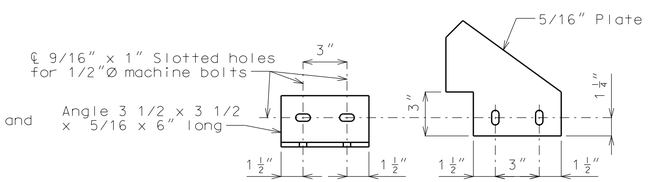

Strip seal gland size = 3"

DETAIL OF GLAND

DETAILS OF STRIP SEAL AT ABUTMENTS NO. 1 & 3

Detailed Aug. 2013
Checked Sep. 2013

Note: This drawing is not to scale. Follow dimensions.

"THIS MEDIA SHOULD NOT BE CONSIDERED A CERTIFIED DOCUMENT."

DATE PREPARED	
10/24/2013	
ROUTE	STATE
I-70	MO
DISTRICT	SHEET NO.
BR	4
COUNTY	
JACKSON	
JOB NO.	
J4P2191	
CONTRACT ID.	
PROJECT NO.	
BRIDGE NO.	
A37631	

DATE	DESCRIPTION

MISSOURI HIGHWAYS AND TRANSPORTATION COMMISSION
105 WEST CAPITOL
JEFFERSON CITY, MO 65102
1-888-ASK-MODOT (1-888-275-6636)

IF A SEAL IS PRESENT ON THIS SHEET IT HAS BEEN ELECTRONICALLY SEALED AND DATED.

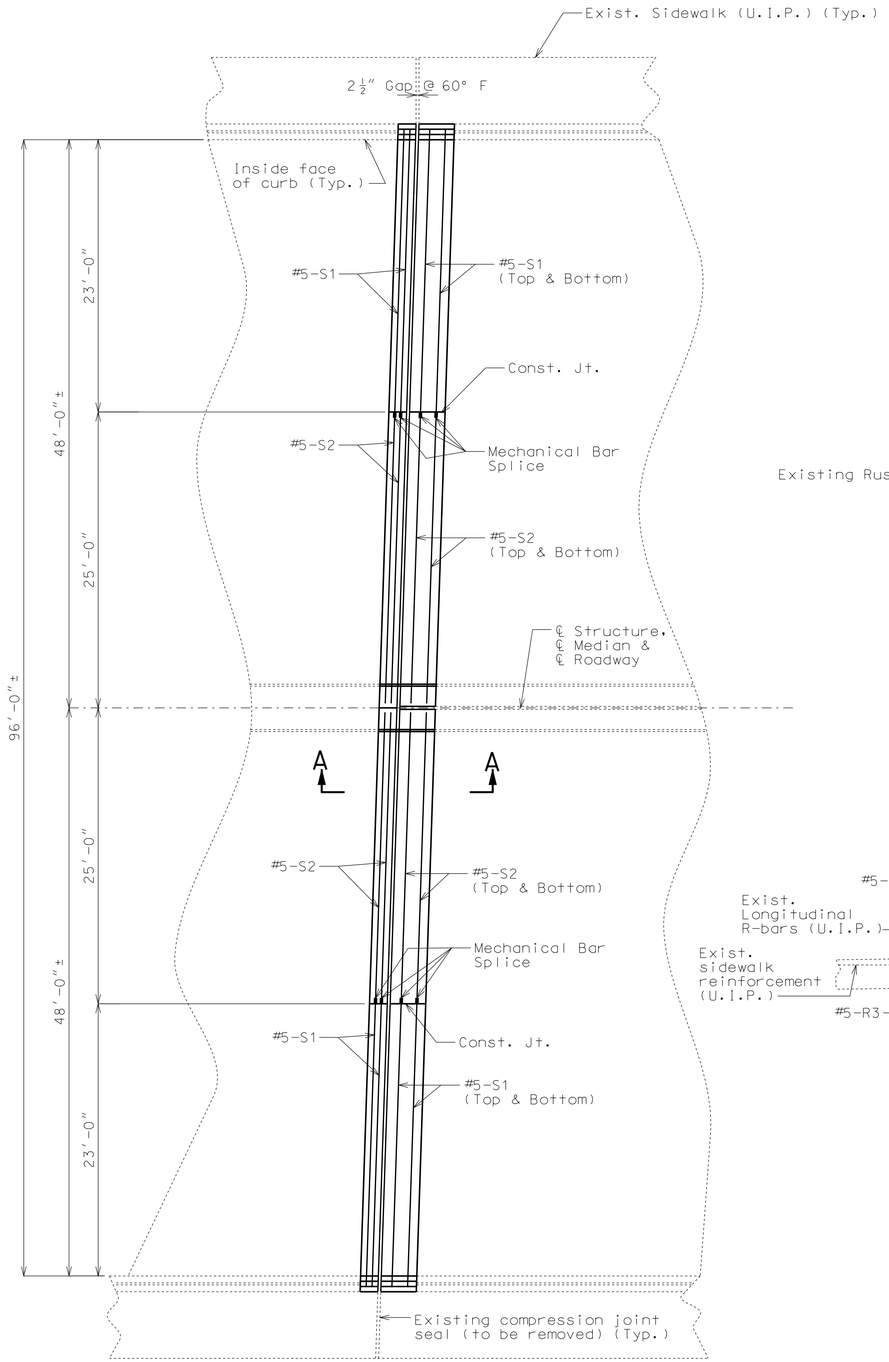

PART PLAN OF SLAB @ ABUTMENT NO. 1 SHOWING REINFORCEMENT

(Abutment No. 3 similar)

Note: Expansion device and skid plate not shown for clarity.

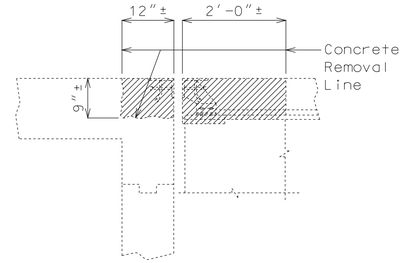

PART SECTION THRU ABUTMENT SHOWING REMOVAL

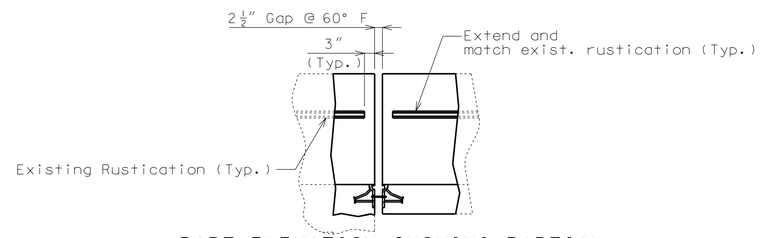

PART ELEVATION SHOWING PARTIAL SAFETY BARRIER CURB REPLACEMENT

(Abutment No. 1 shown, Abutment No. 3 similar)

Note: Strip seal not shown for clarity.

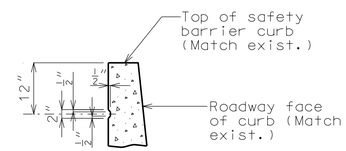

PART SECTION SHOWING RUSTICATION DETAILS

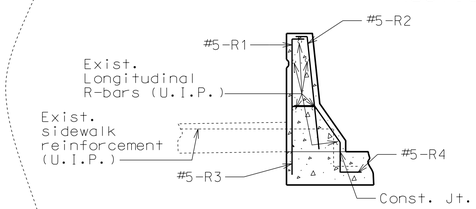

SECTION C-C

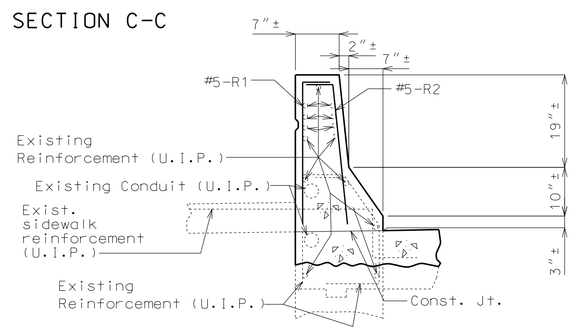

SECTION B-B

Note:

Cost of removing existing compression joint seal in sidewalks will be considered completely covered by the contract unit price for Removal of Existing Expansion Joints & Adjacent Concrete.

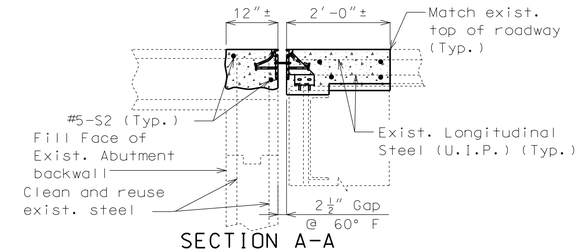

SECTION A-A

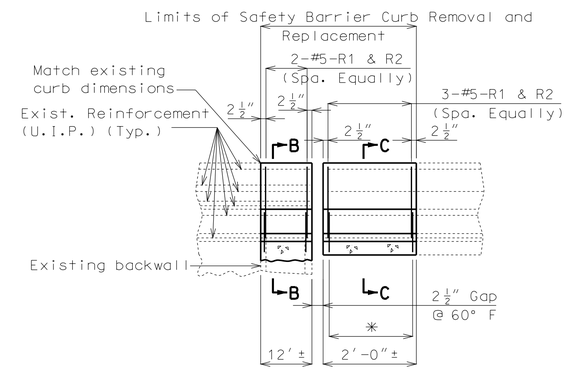

PART ELEVATION SHOWING LEFT BARRIER CURB REINFORCEMENT AT ABUTMENT NO. 1

* 3-#5-R3 & #5-R4 to be spaced with #5-R1 & R2 (Abutment No. 3 similar)

Note: Expansion device, conduit and rustication not shown for clarity.

Notes:

For details of expansion device not shown, see Sheet No. 4.

Shift #5-S1 & S2 bars where necessary to clear the expansion device.

Payment for curb concrete removal and all concrete and reinforcement for safety barrier curb, complete-in-place, will be considered completely covered by the contract unit price for Remove and Replace Barrier Curb per linear foot.

Existing conduit in the left safety barrier curb that falls within the area of curb removal shall be protected from damage. Any damage to the conduit shall be repaired or replaced, at the contractor's expense, as directed by the engineer.

For details of Raised Median Curb, see Sheet No. 3.

The contractor shall use a mechanical bar splice for #5-S1 & S2 bars at the specified location. The total bar lengths for bars indicated in the bill of reinforcing steel are determined based on the end of the bars being located flush to the face of the construction joint. No additional payment will be made for any additional bar lengths required for the mechanical bar splices. Mechanical bar splices shall be in accordance with Sec 706 except that no measurement will be made for mechanical bar splice and will be considered completely covered by the contract unit price for the reinforcing steel.

"THIS MEDIA SHOULD NOT BE CONSIDERED A CERTIFIED DOCUMENT."

DATE PREPARED	10/24/2013
ROUTE	I-70
STATE	MO
DISTRICT	BR
SHEET NO.	5
COUNTY	JACKSON
JOB NO.	J4P2191
CONTRACT ID.	
PROJECT NO.	
BRIDGE NO.	A37631

DESCRIPTION

DATE

MISSOURI HIGHWAYS AND TRANSPORTATION COMMISSION

105 WEST CAPITOL
JEFFERSON CITY, MO 65102
1-888-ASK-MODOT (1-888-275-6636)

IF A SEAL IS PRESENT ON THIS SHEET IT HAS BEEN ELECTRONICALLY SEALED AND DATED.

Detailed Aug. 2013
Checked Sep. 2013

Note: This drawing is not to scale. Follow dimensions.

BILL OF REINFORCING STEEL

NO. REQ'D.	MARK NO. SIZE	MARK NO. MARK	LOCATION	EPOXY (E)	SHAPE NO.	STIRRUP (S)	SUBSTR. (X)	VARIES (V)	NO. EACH	B FT. IN.	C FT. IN.	D FT. IN.	E FT. IN.	F FT. IN.	H FT. IN.	K FT. IN.	NOMINAL LENGTH FT. IN.	ACTUAL LENGTH FT. IN.	WEIGHT LBS.
			SLAB																
26	5	S1	SLAB	E	20					24 2.000							24 2	24 2	655
24	5	S2	SLAB	E	20					24 10.000							24 10	24 10	622
			RAISED																
			MEDIAN CURB																
20	4	U1	MED CURB	E	10	S					11.000	20.500					3 7	3 5	46
			BARRIER CURB																
20	5	R1	BARRIER CURB	E	19	S				2 6.000	3.500						2 10	2 8	56
20	5	R2	BARRIER CURB	E	15	S				2 6.125	3.500				2 6.000	3.000	2 10	2 9	57
12	5	R3	BARRIER CURB	E	19	S				17.000	6.000						0 23	0 22	23
12	5	R4	BARRIER CURB	E	27	S					6.000	11.125	7.000	12.000	9.125	6.375	3 0	2 10	35
			TOTALS																
	4			E															46
	5			E															1448
			TOTAL																0
			TOTAL	E															1494
			Slab on Girder																
	4			E															46
	5			E															1277
			TOTAL																1323
			Safety Barrier Curb																
	5			E															171
			TOTAL																171

BILL OF REINFORCING STEEL

NO. REQ'D.	MARK NO. SIZE	MARK NO. MARK	LOCATION	EPOXY (E)	SHAPE NO.	STIRRUP (S)	SUBSTR. (X)	VARIES (V)	NO. EACH	B FT. IN.	C FT. IN.	D FT. IN.	E FT. IN.	F FT. IN.	H FT. IN.	K FT. IN.	NOMINAL LENGTH FT. IN.	ACTUAL LENGTH FT. IN.	WEIGHT LBS.

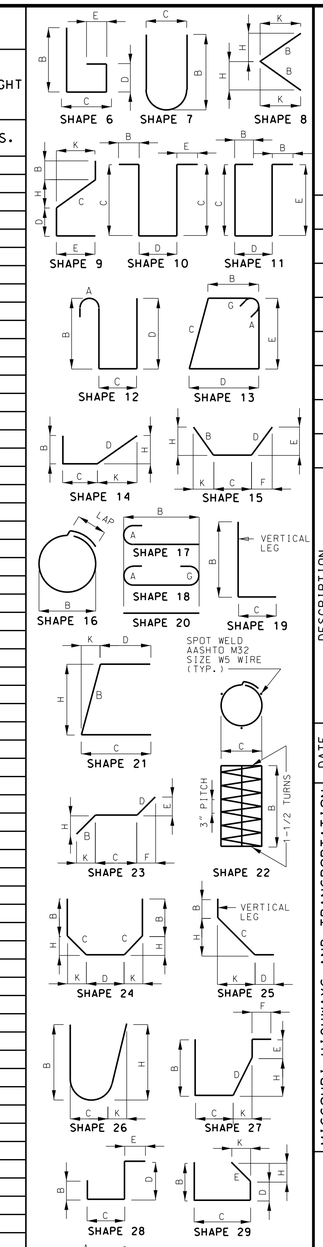

"THIS MEDIA SHOULD NOT BE CONSIDERED A CERTIFIED DOCUMENT."

DATE PREPARED	10/24/2013
ROUTE	I-70
STATE	MO
DISTRICT	BR
SHEET NO.	6
COUNTY	JACKSON
JOB NO.	J4P2191
CONTRACT ID.	
PROJECT NO.	
BRIDGE NO.	A37631

DESCRIPTION	DATE

MISSOURI HIGHWAYS AND TRANSPORTATION COMMISSION

105 WEST CAPITOL
JEFFERSON CITY, MO 65102
1-888-ASK-MODOT (1-888-275-6636)

IF A SEAL IS PRESENT ON THIS SHEET IT HAS BEEN ELECTRONICALLY SEALED AND DATED.

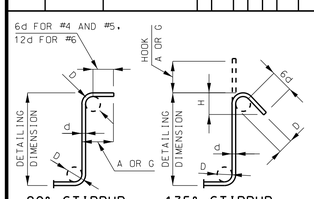

STIRRUP HOOK DIMENSIONS				
GRADES 40 - 50 - 60 KSI				
BAR SIZE	D (IN.)	90° HOOK	135° HOOK	
		HOOK A OR G	HOOK A OR G	APPROX. H
#4	2"	4 1/2"	4 1/2"	3"
#5	2 1/2"	6"	5 1/2"	3 3/4"
#6	4 1/2"	12"	8"	4 1/2"

NOTE: UNLESS OTHERWISE NOTED DIAMETER "D" IS THE SAME FOR ALL BENDS AND HOOKS ON A BAR.

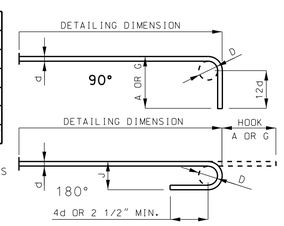

END HOOK DIMENSIONS				
BAR SIZE	D (IN.)	ALL GRADES		
		180° HOOKS		90° HOOKS
		A OR G	J	A OR G
#3	2 1/4"	5"	3"	6"
#4	3"	6"	4"	8"
#5	3 3/4"	7"	5"	10"
#6	4 1/2"	8"	6"	12"
#7	5 1/4"	10"	7"	14"
#8	6"	11"	8"	16"
#9	9 1/2"	15"	11 3/4"	19"
#10	10 3/4"	17"	13 1/4"	22"
#11	12"	19"	14 3/4"	2'-0"
#14	18 1/4"	2'-3"	21 3/4"	2'-7"

TWO ADDITIONAL #5-S1 ARE INCLUDED IN THE BAR BILL FOR TESTING.

NOTE:
ALL STANDARD HOOKS AND BENDS OTHER THAN 180 DEGREE ARE TO BE BENT WITH SAME PROCEDURE AS FOR 90 DEGREE STANDARD HOOKS.
HOOKS AND BENDS SHALL BE IN ACCORDANCE WITH THE PROCEDURES AS SHOWN ON THIS SHEET.
E = EPOXY COATED REINFORCEMENT.
S = STIRRUP.
X = BAR IS INCLUDED IN SUBSTRUCTURE QUANTITIES.
V = BAR DIMENSIONS VARY IN EQUAL INCREMENTS BETWEEN DIMENSIONS SHOWN ON THIS LINE AND THE FOLLOWING LINE.
NO. EA. = NUMBER OF BARS OF EACH LENGTH.
NOMINAL LENGTHS ARE BASED ON OUT TO OUT DIMENSIONS SHOWN IN BENDING DIAGRAMS AND ARE LISTED FOR FABRICATORS USE. (NEAREST INCH)
ACTUAL LENGTHS ARE MEASURED ALONG CENTERLINE BAR TO THE NEAREST INCH.
PAYWEIGHTS ARE BASED ON ACTUAL LENGTHS.
FOUR ANGLE OR CHANNEL SPACERS ARE REQUIRED FOR EACH COLUMN SPIRAL. SPACERS ARE TO BE PLACED ON INSIDE OF SPIRALS. LENGTH AND WEIGHT OF COLUMN SPIRALS DO NOT INCLUDE SPLICES OR SPACERS.
REINFORCING STEEL (GRADE 60) FY = 60,000 PSI.

Detailed Aug. 2013
Checked Sep. 2013

Note: This drawing is not to scale. Follow dimensions.

SEC/SUR 12 TWP 49N RGE 31W

MISSOURI HIGHWAYS AND TRANSPORTATION COMMISSION

U.I.P. AND REHABILITATE EXISTING (49'-60'-49') CONTINUOUS COMPOSITE WIDE FLANGE SPANS (SQUARE)

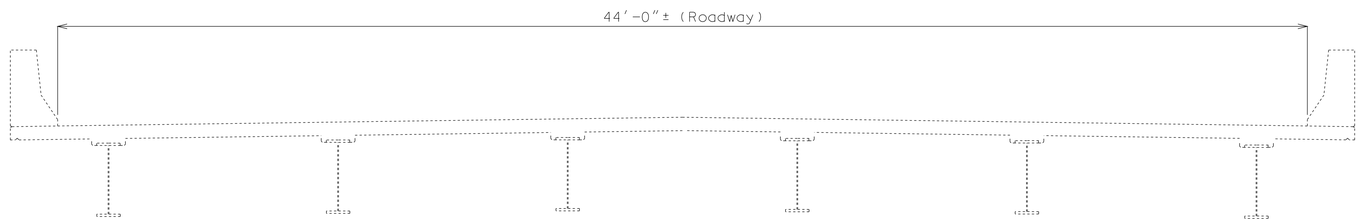

TYPICAL SECTION THRU SLAB

GENERAL NOTES:

Design Specifications:

2002 - AASHTO LFD (17th Edition) Standard Specifications
Bridge Deck Rating = 7

Design Loading:

HS20 (1977), HS20-44 (New Construction)

Design Unit Stresses:

Class B-1 Concrete (End Bents and Safety Barrier Curb) f'c = 4,000 psi

Reinforcing Steel (Grade 60) fy = 60,000 psi

Joint Filler:

All joint filler shall be in accordance with Sec 1057 for preformed sponge rubber expansion and partition joint filler, except as noted.

Reinforcing Steel:

Minimum clearance to reinforcing steel shall be 1½", unless otherwise shown.

Miscellaneous:

Bars bonded in old concrete not removed shall be cleanly stripped and embedded into new concrete where possible. If length is available, old bars shall extend into new concrete at least 40 diameters for smooth bars and 30 diameters for deformed bars, unless otherwise noted.

Outline of old work is indicated by light dashed lines. Heavy lines indicate new work.

Contractor shall verify all dimensions in field before ordering new material.

The area exposed by the removal of concrete and not covered with new concrete shall be coated with an approved qualified special mortar in accordance with Sec 704.

Traffic Handling:

See Sheet No. 2 for Details of Stage Construction and Roadway Plans for Traffic Control.

Estimated Quantities

Item		Total
Removal of Existing Expansion Joints & Adjacent Concrete	linear foot	88
Remove and Replace Barrier Curb	linear foot	14
Class B-1 Concrete	cu. yard	36.5
Reinforcing Steel (Epoxy Coated)	pound	2040

REPAIRS TO BRIDGE: RTE. 7 OVER WEST FIRE PRAIRIE CREEK DIVERSION CHANNEL

STATE ROAD FROM RTE. 78 SOUTH TO I-70

ABOUT 0.6 MILE SOUTH OF RTE. 78

STA. 9+18.50± (MATCH EXIST.)

STD. 617.20

STD. 706.35

Detailed Aug. 2013
Checked Sep. 2013

Note: This drawing is not to scale. Follow dimensions.

"THIS MEDIA SHOULD NOT BE CONSIDERED A CERTIFIED DOCUMENT."

DATE PREPARED 10/8/2013

ROUTE 7 | STATE MO

DISTRICT BR | SHEET NO. 1

COUNTY JACKSON

JOB NO. J4P2191

CONTRACT ID.

PROJECT NO.

BRIDGE NO. A42961

DESCRIPTION

DATE

IF A SEAL IS PRESENT ON THIS SHEET IT HAS BEEN ELECTRONICALLY SEALED AND DATED.

MISSOURI HIGHWAYS AND TRANSPORTATION COMMISSION
105 WEST CAPITOL
JEFFERSON CITY, MO 65102
1-888-ASK-MODOT (1-888-275-6636)

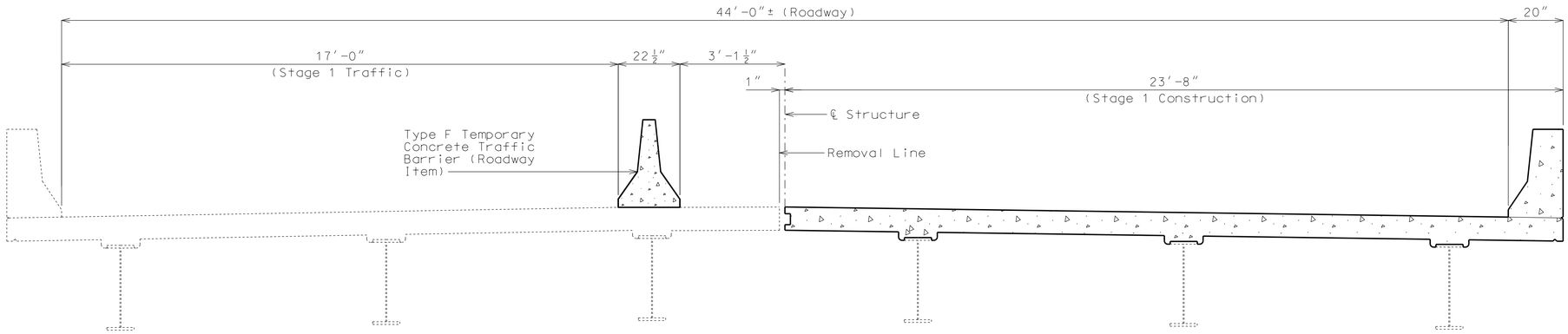

STAGE 1 CONSTRUCTION

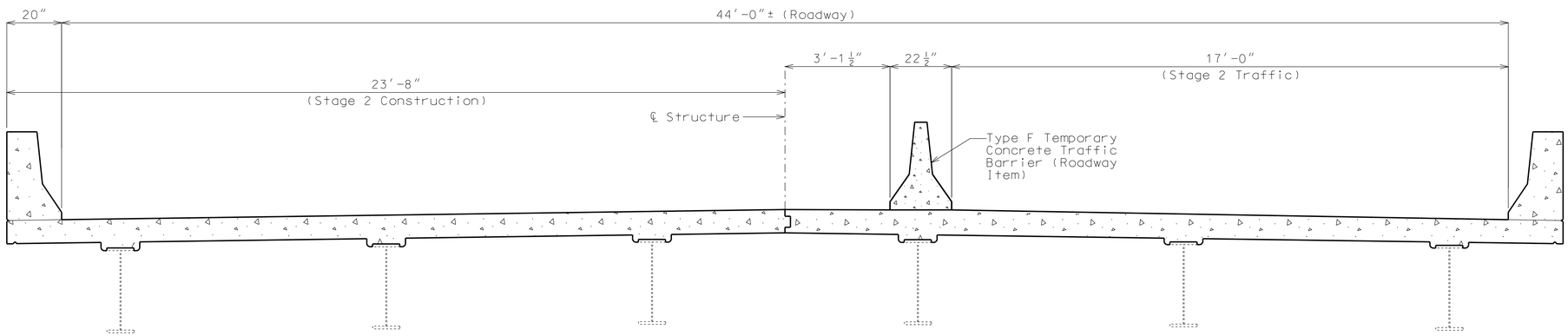

STAGE 2 CONSTRUCTION

Note:

Temporary Barrier shall not be attached to bridge.

DETAILS OF STAGE CONSTRUCTION AT EXPANSION JOINTS

Detailed Aug. 2013
Checked Sep. 2013

Note: This drawing is not to scale. Follow dimensions.

"THIS MEDIA SHOULD NOT BE CONSIDERED A CERTIFIED DOCUMENT."

DATE PREPARED	10/8/2013
ROUTE	7
STATE	MO
DISTRICT	BR
SHEET NO.	2
COUNTY	JACKSON
JOB NO.	J4P2191
CONTRACT ID.	
PROJECT NO.	
BRIDGE NO.	A42961

DATE	DESCRIPTION

MISSOURI HIGHWAYS AND TRANSPORTATION COMMISSION

105 WEST CAPITOL
JEFFERSON CITY, MO 65102
1-888-ASK-MODOT (1-888-275-6636)

IF A SEAL IS PRESENT ON THIS SHEET IT HAS BEEN ELECTRONICALLY SEALED AND DATED.

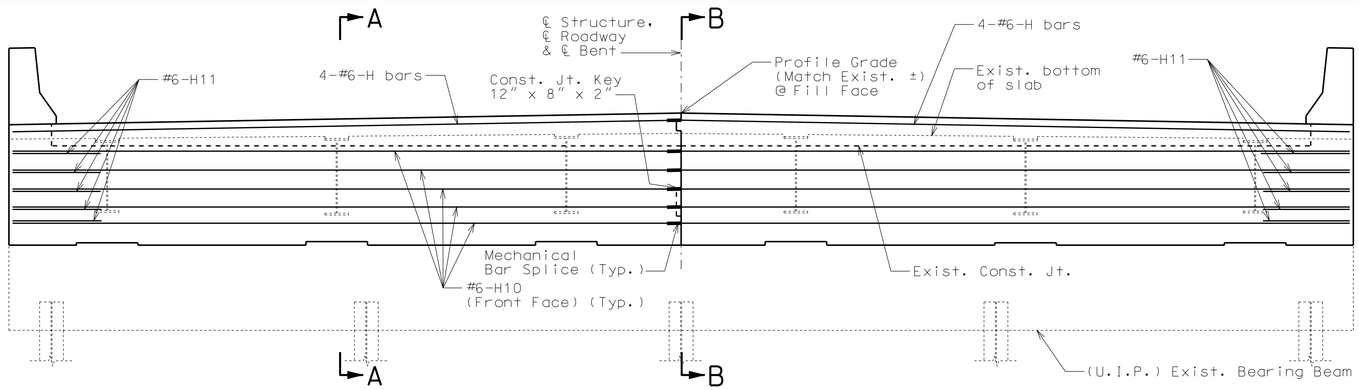

SECTION NEAR END BENT

Notes: Existing steel end diaphragms not shown for clarity (Leave-in-place).

U bars and resin anchors not shown for clarity.

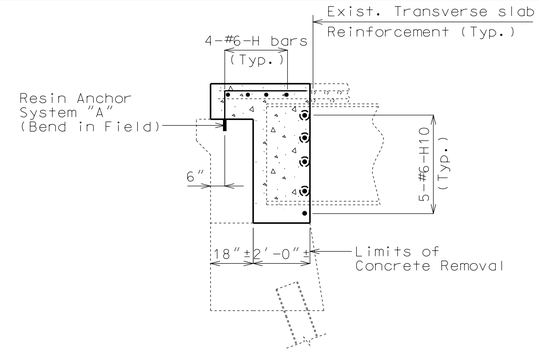

SECTION A-A

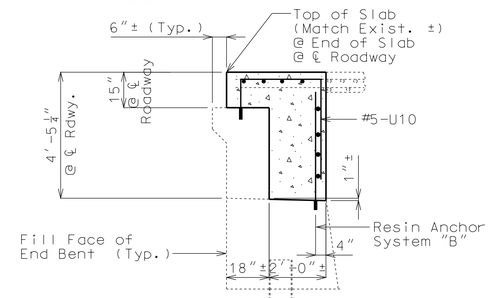

SECTION B-B

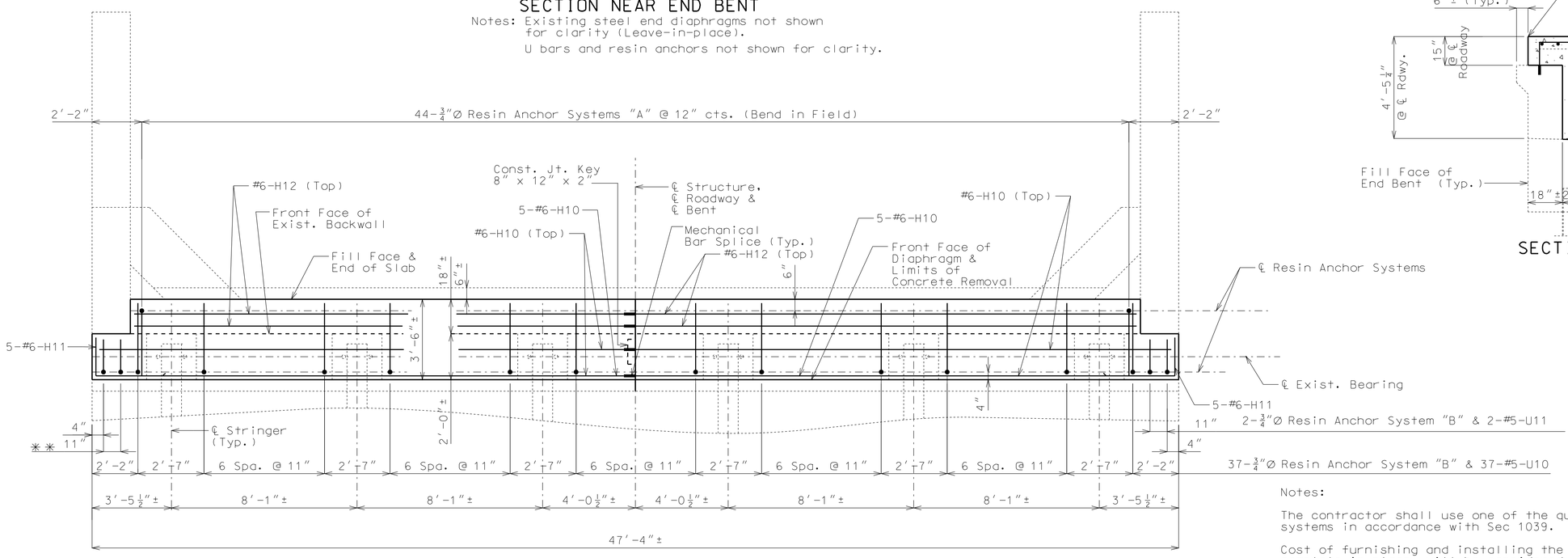

PART PLAN

✱✱ 2-¾"Ø Resin Anchor System "B" & 2-#5-U11

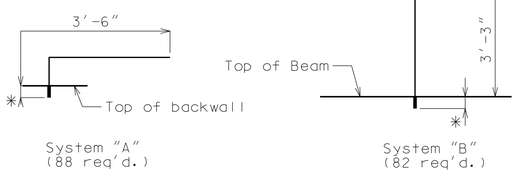

System "A" (88 req'd.)

System "B" (82 req'd.)

✱ Manufacturer's recommended embedment length (5" min. into sound concrete)

DETAILS OF RESIN ANCHOR SYSTEMS

Note:

The contractor shall use a mechanical bar splice for #6-H10 & H12 at the specified location. The total bar lengths for bars indicated in the bill of reinforcing steel are determined based on the end of the bars being located flush to the face of the construction joint. No additional payment will be made for any additional bar lengths required for the mechanical bar splices. Mechanical bar splices shall be in accordance with Sec 706 except that no measurement will be made for mechanical bar splice and will be considered completely covered by the contract unit price for the reinforcing steel.

DETAILS OF END BENTS NO. 1 & 4

(End Bent No. 1 shown, End Bent No. 4 similar)

Notes:

The contractor shall use one of the qualified resin anchor systems in accordance with Sec 1039.

Cost of furnishing and installing the resin anchor system, complete-in-place, will be considered completely covered by the contract unit price for Class B-1 Concrete.

The minimum embedment depth in concrete with f'c = 4,000 psi for the resin anchor system shall be that required to meet the minimum ultimate pullout strength in accordance with Sec 1039 but shall not be less than 5".

A #6 Grade 60 reinforcing bar shall be substituted for the ¾"Ø threaded rod.

The exposed and accessible sufaces of the existing structural steel and bearings that will be encased in concrete shall be cleaned with a minimum of SSPC-SP-2 surface preparation before concrete is poured. Payment for cleaning the steel to be encased in concrete will be considered completely covered by the contract unit price for Class B-1 Concrete.

Payment for diaphragm and slab concrete, complete-in-place, will be considered completely covered by the contract unit price for Class B-1 Concrete.

Payment for furnishing and installing diaphragm and slab reinforcing steel, complete-in-place, will be considered completely covered by the contract unit price for Reinforcing Steel (Epoxy Coated).

All concrete in the end bent shall be Class B-1.

For detail of Web Holes at End Bent, and Details of Concrete Removal at End Bents, see Sheet No. 4.

Detailed Aug. 2013
Checked Sep. 2013

Note: This drawing is not to scale. Follow dimensions.

"THIS MEDIA SHOULD NOT BE CONSIDERED A CERTIFIED DOCUMENT."

DATE PREPARED	
10/8/2013	
ROUTE 7	STATE MO
DISTRICT BR	SHEET NO. 3
COUNTY JACKSON	
JOB NO. J4P2191	
CONTRACT ID.	
PROJECT NO.	
BRIDGE NO. A42961	

DATE	DESCRIPTION

MISSOURI HIGHWAYS AND TRANSPORTATION COMMISSION
105 WEST CAPITOL
JEFFERSON CITY, MO 65102
1-888-ASK-MODOT (1-888-275-6636)

IF A SEAL IS PRESENT ON THIS SHEET IT HAS BEEN ELECTRONICALLY SEALED AND DATED.

Notes:

Remove existing stirrups within limits of Safety Barrier Curb Removal.

Concrete in the safety barrier curb replacement shall be Class B-1.

All exposed edges of new safety barrier curb shall match existing safety barrier curb.

Payment for curb removal and all concrete and reinforcement for safety barrier curb, complete-in-place, will be considered completely covered by the contract unit price for Remove and Replace Barrier Curb per linear foot.

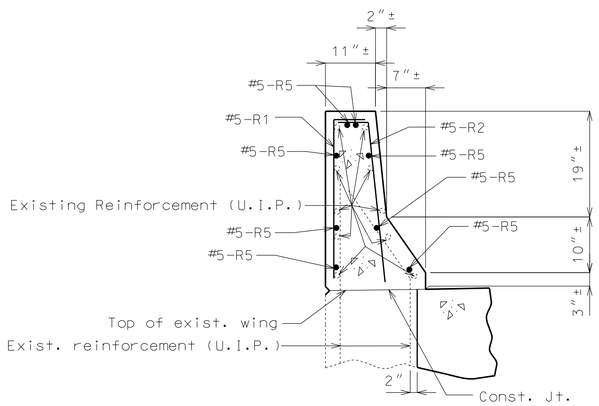

PART SECTION A-A

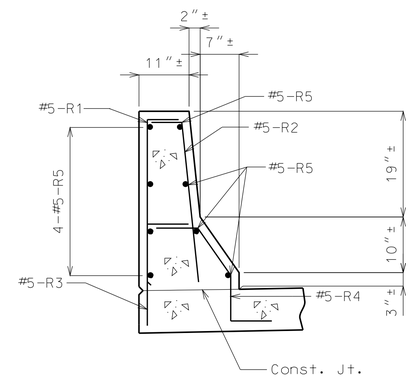

PART SECTION B-B

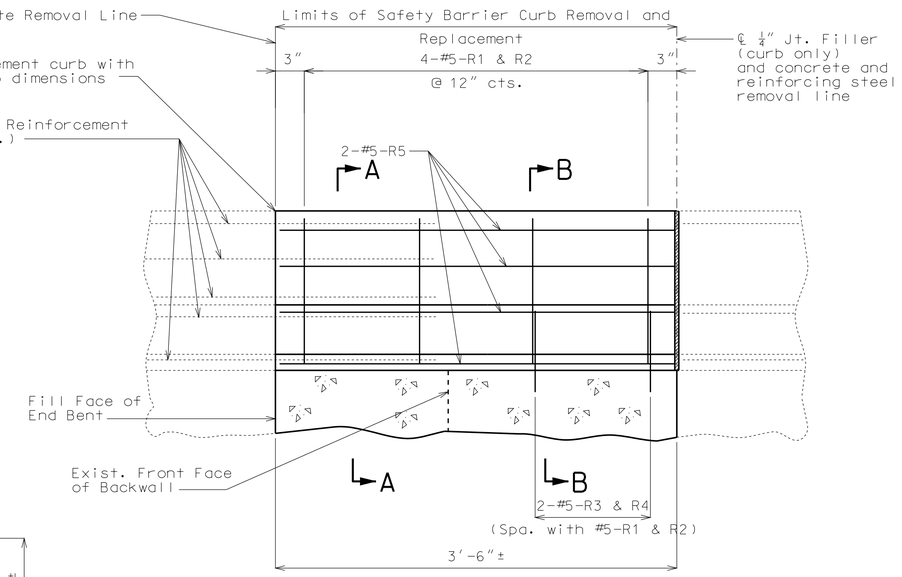

PART ELEVATION SHOWING LEFT BARRIER CURB REINFORCEMENT AT END BENT NO. 1

(Right barrier curb & End Bent No. 4 similar)

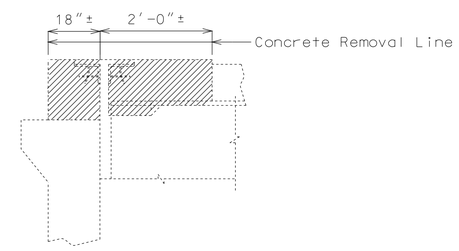

PART SECTION THRU END BENT SHOWING REMOVAL

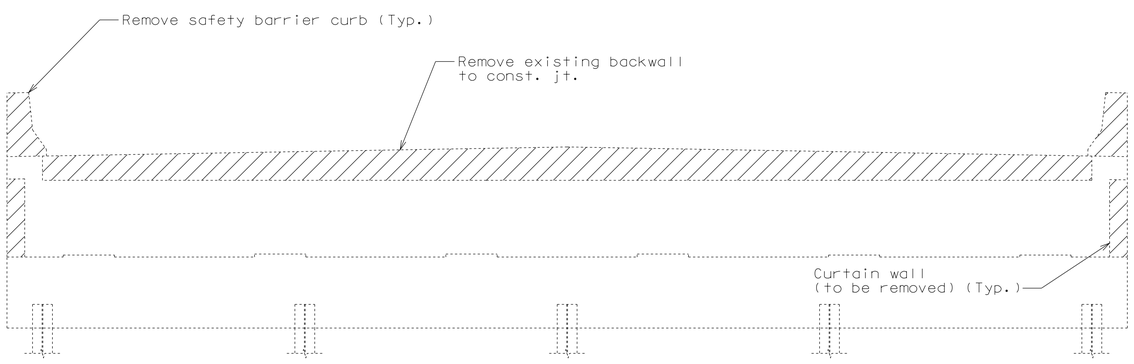

DETAILS OF CONCRETE REMOVAL AT END BENTS

Note:

The cost of concrete removal as shown, including existing expansion device, will be considered completely covered by the contract unit price for Removal of Existing Expansion Joints & Adjacent Concrete.

℄ $1\frac{1}{16}$"Ø holes in each stringer. Cost of field drilling holes in exist. webs will be considered completely covered by the contract unit price for Class B-1 Concrete.

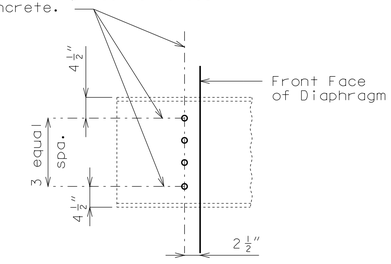

DETAIL OF WEB HOLES AT END BENT

Detailed Aug. 2013
Checked Sep. 2013

Note: This drawing is not to scale. Follow dimensions.

"THIS MEDIA SHOULD NOT BE CONSIDERED A CERTIFIED DOCUMENT."

DATE PREPARED	
10/8/2013	
ROUTE 7	STATE MO
DISTRICT BR	SHEET NO. 4
COUNTY JACKSON	
JOB NO. J4P2191	
CONTRACT ID.	
PROJECT NO.	
BRIDGE NO. A42961	

DATE	DESCRIPTION

MISSOURI HIGHWAYS AND TRANSPORTATION COMMISSION

105 WEST CAPITOL
JEFFERSON CITY, MO 65102
1-888-ASK-MODOT (1-888-275-6636)

IF A SEAL IS PRESENT ON THIS SHEET IT HAS BEEN ELECTRONICALLY SEALED AND DATED.

BILL OF REINFORCING STEEL

NO. REQ'D.	MARK NO. SIZE	MARK NO. MARK	LOCATION	EPOXY (E)	SHAPE NO.	STIRRUP (S)	SUBSTR. (X)	VARIES (V)	NO. EACH	B FT. IN.	C FT. IN.	D FT. IN.	E FT. IN.	F FT. IN.	H FT. IN.	K FT. IN.	NOMINAL LENGTH FT. IN.	ACTUAL LENGTH FT. IN.	WEIGHT LBS.
			END BENTS																
28	6	H10	DIAPHRAGM	E	20					23 6.000							23 6	23 6	988
20	6	H11	DIAPHRAGM	E	19	S				21.000	3 0.000						4 9	4 7	138
10	6	H12	DIAPHRAGM	E	20					22 0.000							22 0	22 0	330
74	5	U10	DIAPHRAGM	E	19	S				3 10.000	3 2.000						7 0	6 11	534
8	5	U11	DIAPHRAGM	E	19	S				3 10.000	20.000						5 6	5 5	45
			BARRIER CURB																
16	5	R1	BARRIER CURB	E	19	S				2 6.000	6.000						3 0	2 11	49
16	5	R2	BARRIER CURB	E	15	S				2 6.125	6.000				2 6.000	3.000	3 0	2 11	49
8	5	R3	BARRIER CURB	E	19	S				9.000	17.000						2 2	2 1	17
8	5	R4	BARRIER CURB	E	27	S					9.000	11.125	7.000	12.000	9.125	6.375	3 3	3 1	26
32	5	R5	BARRIER CURB	E	20					3 3.000							3 3	3 3	108
			TOTALS																
	5			E															828
	6			E															1456
			TOTAL																0
			TOTAL	E															2284
			Slab on Girder																
	5			E															579
	6			E															1456
			TOTAL																2035
			Safety Barrier Curb																
	5			E															249
			TOTAL																249

BILL OF REINFORCING STEEL

NO. REQ'D.	MARK NO. SIZE	MARK NO. MARK	LOCATION	EPOXY (E)	SHAPE NO.	STIRRUP (S)	SUBSTR. (X)	VARIES (V)	NO. EACH	B FT. IN.	C FT. IN.	D FT. IN.	E FT. IN.	F FT. IN.	H FT. IN.	K FT. IN.	NOMINAL LENGTH FT. IN.	ACTUAL LENGTH FT. IN.	WEIGHT LBS.

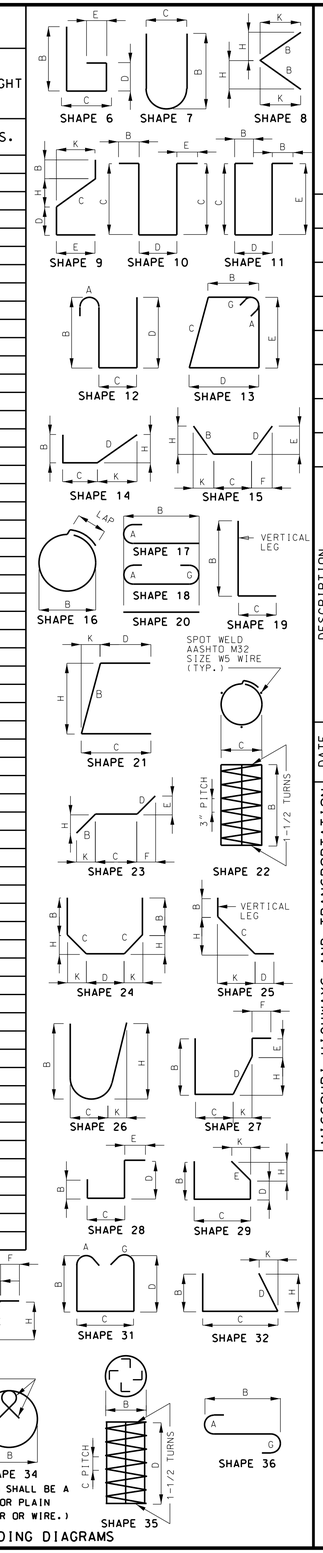

BENDING DIAGRAMS

"THIS MEDIA SHOULD NOT BE CONSIDERED A CERTIFIED DOCUMENT."

DATE PREPARED	10/8/2013
ROUTE	7
STATE	MO
DISTRICT	BR
SHEET NO.	5
COUNTY	JACKSON
JOB NO.	J4P2191
CONTRACT ID.	
PROJECT NO.	
BRIDGE NO.	A42961

DATE	DESCRIPTION

IF A SEAL IS PRESENT ON THIS SHEET IT HAS BEEN ELECTRONICALLY SEALED AND DATED.

MISSOURI HIGHWAYS AND TRANSPORTATION COMMISSION

105 WEST CAPITOL
JEFFERSON CITY, MO 65102
1-888-ASK-MODOT (1-888-275-6636)

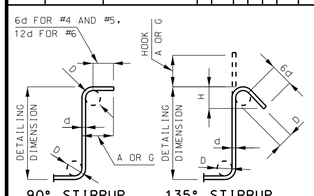

STIRRUP HOOK DIMENSIONS				
GRADES 40 - 50 - 60 KSI				
BAR SIZE	D (IN.)	90° HOOK	135° HOOK	
		HOOK A OR G	HOOK A OR G	APPROX. H
#4	2"	4 1/2"	4 1/2"	3"
#5	2 1/2"	6"	5 1/2"	3 3/4"
#6	4 1/2"	12"	8"	4 1/2"

NOTE: UNLESS OTHERWISE NOTED DIAMETER "D" IS THE SAME FOR ALL BENDS AND HOOKS ON A BAR.

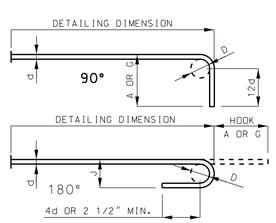

END HOOK DIMENSIONS				
BAR SIZE	D (IN.)	ALL GRADES		
		180° HOOKS		90° HOOKS
		A OR G	J	A OR G
#3	2 1/4"	5"	3"	6"
#4	3"	6"	4"	8"
#5	3 3/4"	7"	5"	10"
#6	4 1/2"	8"	6"	12"
#7	5 1/4"	10"	7"	14"
#8	6"	11"	8"	16"
#9	9 1/2"	15"	11 3/4"	19"
#10	10 3/4"	17"	13 1/4"	22"
#11	12"	19"	14 3/4"	2'-0"
#14	18 1/4"	2'-3"	21 3/4"	2'-7"

TWO ADDITIONAL #6-H12 ARE INCLUDED IN THE BAR BILL FOR TESTING.

NOTE:
ALL STANDARD HOOKS AND BENDS OTHER THAN 180 DEGREE ARE TO BE BENT WITH SAME PROCEDURE AS FOR 90 DEGREE STANDARD HOOKS.
HOOKS AND BENDS SHALL BE IN ACCORDANCE WITH THE PROCEDURES AS SHOWN ON THIS SHEET.
E = EPOXY COATED REINFORCEMENT.
S = STIRRUP.
X = BAR IS INCLUDED IN SUBSTRUCTURE QUANTITIES.
V = BAR DIMENSIONS VARY IN EQUAL INCREMENTS BETWEEN DIMENSIONS SHOWN ON THIS LINE AND THE FOLLOWING LINE.
NO. EA. = NUMBER OF BARS OF EACH LENGTH.
NOMINAL LENGTHS ARE BASED ON OUT TO OUT DIMENSIONS SHOWN IN BENDING DIAGRAMS AND ARE LISTED FOR FABRICATORS USE. (NEAREST INCH)
ACTUAL LENGTHS ARE MEASURED ALONG CENTERLINE BAR TO THE NEAREST INCH.
PAYWEIGHTS ARE BASED ON ACTUAL LENGTHS.
FOUR ANGLE OR CHANNEL SPACERS ARE REQUIRED FOR EACH COLUMN SPIRAL. SPACERS ARE TO BE PLACED ON INSIDE OF SPIRALS. LENGTH AND WEIGHT OF COLUMN SPIRALS DO NOT INCLUDE SPLICES OR SPACERS.
REINFORCING STEEL (GRADE 60) FY = 60,000 PSI.

Detailed Sep. 2013
Checked Sep. 2013

Note: This drawing is not to scale. Follow dimensions.