# MISSOURI HIGHWAYS AND TRANSPORTATION COMMISSION

## PLANS FOR PROPOSED STATE HIGHWAY

## JACKSON AND CLAY COUNTIES

### DESIGN DESIGNATION

A.A.D.T. - 20XX = VARIES
A.A.D.T. - 20XX = VARIES
D.H.V. = VARIES
T = VARIES
V = VARIES
D = VARIES
FUNCTIONAL CLASSIFICATION- VARIES

NO RIGHT OF WAY TO BE PURCHASED FOR THIS PROJECT

### CONVENTIONAL SYMBOLS
(USED IN PLANS)

| | EXISTING | NEW |
|---|---|---|
| BUILDINGS AND STRUCTURES | | |
| GUARD RAIL | | |
| GUARD CABLE | | |
| CONCRETE RIGHT-OF-WAY MARKER | | |
| STEEL RIGHT-OF-WAY MARKER | | |
| LOCATION SURVEY MARKER | | |
| UTILITIES | | |
| FIBER OPTICS | —FO— | —FO— |
| OVERHEAD CABLE TV | —OTV— | —OTV— |
| UNDERGROUND CABLE TV | —UTV— | —UTV— |
| OVERHEAD TELEPHONE | —OT— | —OT— |
| UNDERGROUND TELEPHONE | —UT— | —UT— |
| OVERHEAD POWER | —OE— | —OE— |
| UNDERGROUND POWER | —UE— | —UE— |
| SANITARY SEWER | —S— | —S— |
| STORM SEWER | —SS— | —SS— |
| GAS | —G— | —G— |
| WATER | —W— | —W— |
| MANHOLE | SAN | |
| FIRE HYDRANT | HYD | |
| WATER VALVE | WV | |
| WATER METER | WM | |
| DROP INLET | DI | |
| DITCH BLOCK | | |
| GROUND MOUNTED SIGN | SIGN | |
| LIGHT POLE | | |
| H-FRAME POWER POLE | | |
| TELEPHONE PEDESTAL | PED | |
| FENCE | | |
| CHAIN LINK | —V— | |
| WOVEN WIRE | —X— | |
| GATE POST | | |
| BENCHMARK | BM | |

NOTE: DASHED OR OPEN SYMBOLS INDICATE EXISTING FEATURES

BRIDGE A35302
N OAK TRFY
OVER MO 152

BRIDGE A51801
E 31ST ST
OVER RTE 71

BRIDGE A51811
LINWOOD BLVD
OVER RTE 71

BRIDGE A51831
E 39TH ST
OVER RTE 71

BRIDGE A48631
E 63RD ST
OVER RTE 71

BRIDGE A48611
MEYER BLVD EB
OVER RTE 71
BRIDGE A48621
MEYER BLVD WB
OVER RTE 71

BRIDGE A47382
77TH ST
OVER RTE 71

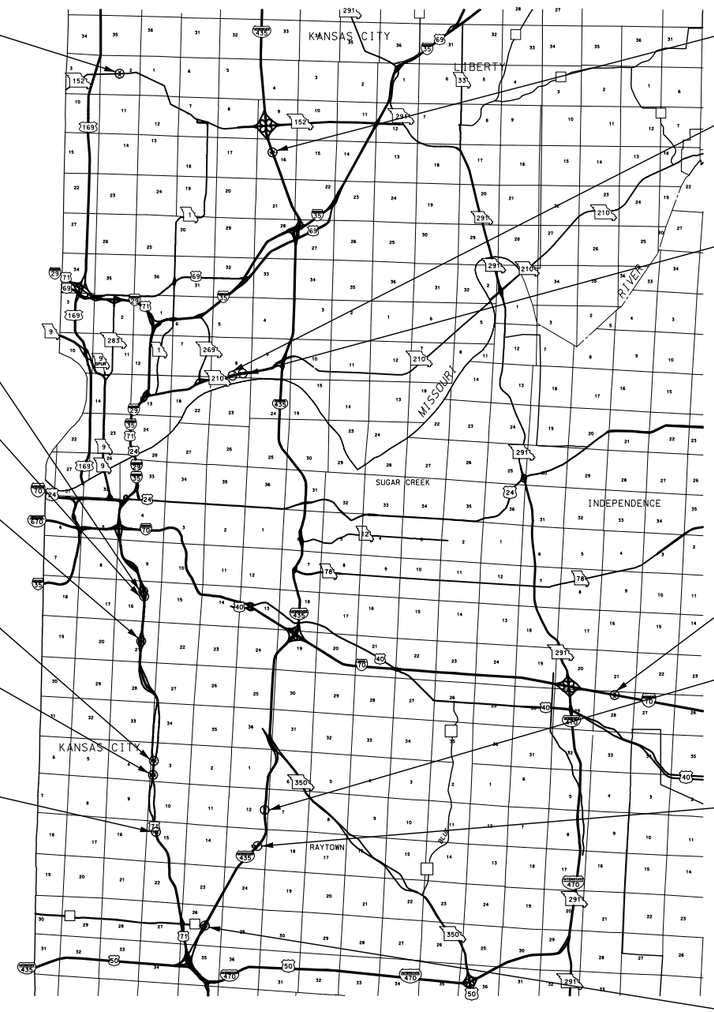


BRIDGE A34482
NE SOCCER DR
OVER I-435

BRIDGE A21773
MO 210 EB
OVER N. BRIGHTON AVE
BRIDGE A21774
MO 210 WB
OVER N. BRIGHTON AVE

BRIDGE A21813
MO 210 EB
OVER SEARCY CREEK PKWY
BRIDGE A21814
MO 210 WB
OVER SEARCY CREEK PKWY

BRIDGE A57261
LITTLE BLUE PKWY
OVER I-70

BRIDGE A14855
I-435 NB
OVER GREGORY BLVD
BRIDGE A14856
I-435 SB
OVER GREGORY BLVD

BRIDGE A16405
I-435 NB
OVER OLDHAM RD
BRIDGE A16406
I-435 SB
OVER OLDHAM RD

BRIDGE A16433
BANNISTER RD
OVER I-435

PROJECT LIMITS: VARIOUS

JOINT REPLACEMENTS, PROTECTIVE COATING APPLICATIONS, COMPRESSION SEAL REPLACEMENTS, DRAINAGE IMPROVEMENTS

NOT TO SCALE

THE EXISTENCE AND APPROXIMATE LOCATION OF UTILITY FACILITIES KNOWN TO EXIST, AS SHOWN ON THE PLANS, ARE BASED ON THE BEST INFORMATION AVAILABLE TO THE COMMISSION AT THIS TIME. THIS INFORMATION IS PROVIDED BY THE COMMISSION "AS-IS" AND THE COMMISSION EXPRESSLY DISCLAIMS ANY REPRESENTATION OR WARRANTY AS TO THE COMPLETENESS, ACCURACY, OR SUITABILITY OF THE INFORMATION FOR ANY USE. RELIANCE UPON THIS INFORMATION IS DONE AT THE RISK AND PERIL OF THE USER, AND THE COMMISSION SHALL NOT BE LIABLE FOR ANY DAMAGES THAT MAY ARISE FROM ANY ERROR IN THE INFORMATION. IT IS, THEREFORE, THE RESPONSIBILITY OF THE CONTRACTOR TO VERIFY THE EXISTENCE, LOCATION AND STATUS OF ANY FACILITY. SUCH VERIFICATION INCLUDES DIRECT CONTACT WITH THE LISTED UTILITIES.

### INDEX OF SHEETS


| DESCRIPTION | SHEET NUMBER |
|---|---|
| TITLE SHEET | 1 |
| QUANTITIES (QU) (2 SHEETS) | 3 |
| SPECIAL SHEETS (SS) | 4 |
| TRAFFIC CONTROL SHEETS (TC) | 5-13 |
| BRIDGE DRAWINGS (B) | |
| A14855 | 1-3 |
| A14856 | 1-3 |
| A16405 | 1-3 |
| A16406 | 1-6 |
| A16433 | 1-4 |
| A21773 | 1-6 |
| A21774 | 1-6 |
| A21813 | 1-6 |
| A21814 | 1-6 |
| A34482 | 1 |
| A35302 | 1 |
| A47382 | 1-3 |
| A48611 | 1 |
| A48621 | 1 |
| A48631 | 1 |
| A51801 | 1-4 |
| A51811 | 1-3 |
| A51831 | 1-4 |
| A57261 | 1 |


### LENGTH OF PROJECT

| | | |
|---|---|---|
| BEGINNING OF PROJECT | VARIES | |
| END OF PROJECT | VARIES | |
| BRIDGE A14855 | 175 | FT |
| BRIDGE A14856 | 175 | FT |
| BRIDGE A16405 | 165 | FT |
| BRIDGE A16406 | 187 | FT |
| BRIDGE A16433 | 243 | FT |
| BRIDGE A21773 | 241 | FT |
| BRIDGE A21774 | 241 | FT |
| BRIDGE A21813 | 137 | FT |
| BRIDGE A21814 | 137 | FT |
| BRIDGE A34482 | 308 | FT |
| BRIDGE A35302 | 285 | FT |
| BRIDGE A47382 | 245 | FT |
| BRIDGE A48611 | 127 | FT |
| BRIDGE A48621 | 128 | FT |
| BRIDGE A48631 | 199 | FT |
| BRIDGE A51801 | 275 | FT |
| BRIDGE A51811 | 190 | FT |
| BRIDGE A51831 | 247 | FT |
| BRIDGE A57261 | 309 | FT |
| APPARENT LENGTH | 3769.00 | FEET |
| TOTAL CORRECTIONS | 0.00 | FEET |
| NET LENGTH OF PROJECT | 3769.00 | FEET |
| STATE LENGTH | 0.714 | MILES |

STATE OF MISSOURI
MARK C. FISHER
NUMBER PE-27971
PROFESSIONAL ENGINEER
THIS SHEET HAS BEEN SIGNED, SEALED AND DATED ELECTRONICALLY.

DATE PREPARED: 2/20/2020
ROUTE: VAR | STATE: MO
DISTRICT: KC | SHEET NO.: 1
COUNTY: VARIOUS
JOB NO.: J4P3266
CONTRACT ID.
PROJECT NO.
BRIDGE NO.

| DATE | DESCRIPTION |
|---|---|

IF A SEAL IS PRESENT ON THIS SHEET IT HAS BEEN ELECTRONICALLY SEALED AND DATED.

MISSOURI HIGHWAYS AND TRANSPORTATION COMMISSION
105 WEST CAPITOL
JEFFERSON CITY, MO 65102
1-888-ASK-MODOT (1-888-275-6636)

## ACM QUANTITIES

| BRIDGE NO. | LOCATION | REMOVAL OF MISCELLANEOUS ACM (NON-FRIABLE) SF |
|---|---|---|
| A14855 | I-435 NB OVER GREGORY BLVD | 17 |
| A14856 | I-435 SB OVER GREGORY BLVD | 17 |
| A16405 | I-435 NB OVER OLDHAM RD | 18 |
| A16406 | I-435 SB OVER OLDHAM RD | 18 |
| A16433 | BANNISTER RD OVER I-435 | 11 |
| A21773 | MO 210 EB OVER BIRMINGHAM RD | 23 |
| A21774 | MO 210 WB OVER BIRMINGHAM RD | 23 |
| A21813 | MO 210 EB OVER SEARCY CREEK PKWY | 13 |
| A21814 | MO 210 WB OVER SEARCY CREEK PKWY | 13 |
| | PAY TOTAL | 153 |

## REMOVAL OF IMPROVEMENTS QUANTITIES

| BRIDGE NO. | LOCATION | LOG MILE | LOG MILE | ITEM | QUANTITY AND UNITS |
|---|---|---|---|---|---|
| A21773 | MO 210 EB OVER BRIGHTON RD | 2.235 | 2.408 | RT | 912.5 |
| A21773 | MO 210 EB OVER BRIGHTON RD | 2.342 | 2.408 | LT | 375 |
| A21773/A21813 | MO 210 EB OVER SEARCY CREEK PKWY | 2.454 | 2.693 | RT | 1250 |
| A21774 | MO 210 WB OVER BRIGHTON RD | 31.109 | 31.175 | LT | 350 |
| A21774 | MO 210 WB OVER BRIGHTON RD | 31.221 | 31.320 | RT | 525 |
| A21813 | MO 210 EB OVER SEARCY CREEK PKWY | 2.611 | 2.693 | LT | 412.5 |
| A21813 | MO 210 EB OVER SEARCY CREEK PKWY | 2.720 | 2.779 | RT | 350 |
| A21814 | MO 210 WB OVER SEARCY CREEK PKWY | 30.809 | 30.907 | RT | 575 |
| A21814 | MO 210 WB OVER SEARCY CREEK PKWY | 30.841 | 30.907 | LT | 350 |
| A21814/A21774 | MO 210 WB OVER SEARCY CREEK PKWY | 30.935 | 31.175 | RT | 1262.5 |
| | | | | | ONE LUMP SUM |

| MOBILIZATION |
|---|
| ONE LUMP SUM |

## GUARDRAIL QUANTITIES

| BRIDGE NO. | LOCATION | LOG MILE | LOG MILE | SIDE | GUARDRAIL REMOVAL | MGS GUARDRAIL LF | MGS BRIDGE APPROACH TRANSITION SECTION (REGULAR/NO CURB) EA | TYPE A CRASHWORTHY END TERMINAL (MASH) EA | MGS END ANCHOR EA |
|---|---|---|---|---|---|---|---|---|---|
| A21773 | MO 210 EB OVER BRIGHTON RD | 2.235 | 2.408 | RT | 912.5 | 825 | 1 | 1 | |
| A21773 | MO 210 EB OVER BRIGHTON RD | 2.342 | 2.408 | LT | 375 | 287.5 | 1 | 1 | |
| A21773/A21813 | MO 210 EB OVER SEARCY CREEK PKWY | 2.454 | 2.693 | RT | 1250 | 1175 | 2 | | |
| A21774 | MO 210 WB OVER BRIGHTON RD | 31.109 | 31.175 | LT | 350 | 262.5 | 1 | 1 | |
| A21774 | MO 210 WB OVER BRIGHTON RD | 31.221 | 31.320 | RT | 525 | 475 | 1 | | 1 |
| A21813 | MO 210 EB OVER SEARCY CREEK PKWY | 2.611 | 2.693 | LT | 412.5 | 325 | 1 | 1 | |
| A21813 | MO 210 EB OVER SEARCY CREEK PKWY | 2.720 | 2.779 | RT | 350 | 300 | 1 | | 1 |
| A21814 | MO 210 WB OVER SEARCY CREEK PKWY | 30.809 | 30.907 | RT | 575 | 487.5 | 1 | 1 | |
| A21814 | MO 210 WB OVER SEARCY CREEK PKWY | 30.841 | 30.907 | LT | 350 | 262.5 | 1 | 1 | |
| A21814/A21774 | MO 210 WB OVER SEARCY CREEK PKWY | 30.935 | 31.175 | RT | 1262.5 | 1187.5 | 2 | | |
| | | | | SUBTOTALS | 6362.5 | 5587.5 | 12 | 6 | 2 |
| | | | | PAY TOTALS | | 5588 | 12 | 6 | 2 |

3 REVISED 4/15/2020

QUANTITIES ADDED AND MODIFIED

2 REVISED 4/3/2020

QUANTITIES ADDED/REVISED FROM ADDED TRAFFIC CONTROL SHEETS

## PAVEMENT QUANTITIES

| BRIDGE NO. | LOCATION | LOG MILE | LOG MILE | ASPHALTIC CONCRETE MIXTURE PG 70-22 (SP095BSM MIX)✳ TON | MODIFIED COLDMILLING (DEPTH TRANSITIONS) SY |
|---|---|---|---|---|---|
| A21773 | MO 210 EB OVER BRIGHTON RD | 2.400 | 2.400 | 28.90 | 316.7 |
| A21773 | MO 210 EB OVER BRIGHTON RD | 2.500 | 2.500 | 28.90 | 316.7 |
| A21774 | MO 210 WB OVER BRIGHTON RD | 31.200 | 31.200 | 28.90 | 316.7 |
| A21774 | MO 210 WB OVER BRIGHTON RD | 31.200 | 31.200 | 28.90 | 316.7 |
| A21813 | MO 210 EB OVER SEARCY CREEK PKWY | 2.700 | 2.700 | 28.90 | 316.7 |
| A21813 | MO 210 EB OVER SEARCY CREEK PKWY | 2.700 | 2.700 | 28.90 | 316.7 |
| A21814 | MO 210 WB OVER SEARCY CREEK PKWY | 30.900 | 30.900 | 28.90 | 316.7 |
| A21814 | MO 210 WB OVER SEARCY CREEK PKWY | 30.900 | 30.900 | 28.90 | 316.7 |
| | | | PAY TOTALS | 231.2 | 2534 |

✳ ASSUME FACTOR OF 2.19 TON/CY

## TEMPORARY PAVEMENT MARKING QUANTITIES

| BRIDGE NO. | LOCATION | 4" TEMPORARY PVMT MARKING PAINT LF | PVMT MARKING REMOVAL LF |
|---|---|---|---|
| A14855 | I-435 NB OVER GREGORY BLVD | 1910 | 2300 |
| A14586 | I-435 SB OVER GREGORY BLVD | 1910 | 2300 |
| A16405 | I-435 NB OVER OLDHAM RD | 1912 | 2308 |
| A16406 | I-435 SB OVER OLDHAM RD | 1956 | 2352 |
| A16433 | BANNISTER RD OVER I-435 | 850 | 850 |
| A21773 | MO 210 EB OVER BRIGHTON RD | 1884 | 2060 |
| A21774 | MO 210 WB OVER BRIGHTON RD | 1884 | 2060 |
| A21813 | MO 210 EB OVER SEARCY CREEK PKWY | 1676 | 1852 |
| A21814 | MO 10 WB OVER SEARCY CREEK PKWY | 1676 | 1852 |
| A47382 | 77TH ST OVER US 71 | 3005 | 3005 |
| | PAY TOTALS | 18663 | 20939 |

## PAVEMENT MARKING QUANTITIES

| BRIDGE NO. | LOCATION | LENGTH FT | 6" WHITE HIGH BUILD WATERBORNE PVMT MARKING PAINT TYPE L BEADS LF | 6" YELLOW HIGH BUILD WATERBORNE PVMT MARKING PAINT TYPE L BEADS LF | 4" WHITE STANDARD WATERBORNE PVMT MARKING PAINT TYPE P BEADS LF | 4" YELLOW STANDARD WATERBORNE PVMT MARKING PAINT TYPE P BEADS LF | PREFORMED THERMOPLASTIC PVMT MARKING LEFT/RIGHT ARROW EA | COMMENTS |
|---|---|---|---|---|---|---|---|---|
| A14855 | I-435 NB OVER GREGORY BLVD | 175 | 652.5 | 175.0 | | | | TWO BROKEN WHITE LANE LINES; ONE WHITE AND ONE YELLOW EDGELINE |
| A14856 | I-435 SB OVER GREGORY BLVD | 175 | 652.5 | 175.0 | | | | TWO BROKEN WHITE LANE LINES; ONE WHITE AND ONE YELLOW EDGELINE |
| A16405 | I-435 NB OVER OLDHAM RD | 165 | 643.1 | 165.0 | | | | TWO BROKEN WHITE LANE LINES; ONE WHITE AND ONE YELLOW EDGELINE |
| A16406 | I-435 SB OVER OLDHAM RD | 187 | 676.1 | 187.0 | | | | TWO BROKEN WHITE LANE LINES; ONE WHITE AND ONE YELLOW EDGELINE |
| A16433 | BANNISTER RD OVER I-435 | 243 | | | 1640.3 | 486.0 | 12 | THREE BROKEN WHITE LANE LINES; FOUR SOLID WHITE LANE LINES; TWO SOLID YELLOW EDGELINES; TWO SOLID WHITE EDGELINES; TWELVE LEFT TURN ARROWS |
| A21773 | MO 210 EB OVER BRIGHTON RD | 241 | 476.6 | 241.0 | | | | ONE BROKEN WHITE LANE LINE; ONE WHITE AND ONE YELLOW EDGELINE |
| A21774 | MO 210 WB OVER BRIGHTON RD | 241 | 476.6 | 241.0 | | | | ONE BROKEN WHITE LANE LINE; ONE WHITE AND ONE YELLOW EDGELINE |
| A21813 | MO 210 EB OVER SEARCY CREEK PKWY | 137 | 346.6 | 137.0 | | | | ONE BROKEN WHITE LANE LINE; ONE WHITE AND ONE YELLOW EDGELINE |
| A21814 | MO 10 WB OVER SEARCY CREEK PKWY | 137 | 346.6 | 137.0 | | | | ONE BROKEN WHITE LANE LINE; ONE WHITE AND ONE YELLOW EDGELINE |
| A47382 | 77TH ST OVER US 71 | 2255 | | | | 4585.0 | 4 | TWTL; DOUBLE YELLOW CENTERLINE; FOUR LEFT TURN ARROWS |
| | | PAY TOTALS | 4271 | 1458 | 1640 | 5071 | 16 | |

3 REVISED 4/15/2020

QUANTITIES MODIFIED

3 SHEET REVISED 4/15/2020

2 SHEET REVISED 4/3/2020

SUMMARY OF QUANTITIES
SHEET 1 OF 2

STATE OF MISSOURI
MARK C. FISHER
NUMBER PE-27971
PROFESSIONAL ENGINEER

THIS SHEET HAS BEEN SIGNED, SEALED AND DATED ELECTRONICALLY.

DATE PREPARED 4/15/2020

ROUTE VAR | STATE MO

DISTRICT KC | SHEET NO. 3

COUNTY VARIOUS

JOB NO. J4P3266

CONTRACT ID.

PROJECT NO.

BRIDGE NO.

DESCRIPTION

DATE

MISSOURI HIGHWAYS AND TRANSPORTATION COMMISSION

105 WEST CAPITOL
JEFFERSON CITY, MO 65102
1-888-ASK-MODOT (1-888-275-6636)

IF A SEAL IS PRESENT ON THIS SHEET IT HAS BEEN ELECTRONICALLY SEALED AND DATED.

REV. 3

EFFECTIVE: 07-01-2019

| SIGN | SIZE IN. | AREA SQ.FT. | QTY EACH | TOTAL AREA SQ.FT. | QTY RELOC EACH | TOTAL RELOC SQ.FT. | SIGN NUM. | DESCRIPTION |
|---|---|---|---|---|---|---|---|---|
| WARNING SIGNS | | | | | | | | |
| W01-1L | 48X48 | 16.00 | | | | | | TURN (SYMBOL LEFT ARROW) |
| W01-1R | 48X48 | 16.00 | | | | | | TURN (SYMBOL RIGHT ARROW) |
| W01-2L | 48X48 | 16.00 | | | | | | CURVE (SYMBOL LEFT ARROW) |
| W01-2R | 48X48 | 16.00 | | | | | | CURVE (SYMBOL RIGHT ARROW) |
| W01-3L | 48X48 | 16.00 | | | | | | REVERSE TURN (SYMBOL LEFT ARROW) |
| W01-3R | 48X48 | 16.00 | | | | | | REVERSE TURN (SYMBOL RIGHT ARROW) |
| W01-4L | 48X48 | 16.00 | 2 | 32.0 | | | | REVERSE CURVE (SYMBOL LEFT ARROW) |
| W01-4R | 48X48 | 16.00 | 1 | 16.0 | | | | REVERSE CURVE (SYMBOL RIGHT ARROW) |
| W01-4bL | 48X48 | 16.00 | | | | | | DOUBLE ARROW REVERSE CURVE (SYMBOL LT ARROWS) |
| W01-4bR | 48X48 | 16.00 | | | | | | DOUBLE ARROW REVERSE CURVE (SYMBOL RT ARROWS) |
| W01-4cL | 48X48 | 16.00 | | | | | | TRIPLE ARROW REVERSE CURVE (SYMBOL LT ARROWS) |
| W01-4cR | 48X48 | 16.00 | | | | | | TRIPLE ARROW REVERSE CURVE (SYMBOL RT ARROWS) |
| W01-6 | 60X30 | 12.50 | | | | | | HORIZONTAL ARROW (SYMBOL) |
| W01-6a | 72X36 | 18.00 | | | | | | HORIZ. ARROW (SYMBOL ON PERMANENT BARRICADE) |
| W01-7 | 60X30 | 12.50 | | | | | | DOUBLE HEAD HORIZONTAL ARROW (SYMBOL) |
| W01-7a | 72X36 | 18.00 | | | | | | DOUBLE HEAD HORIZ. ARROW (SYMBOL ON PERM. BARR.) |
| W01-8 | 18X24 | 3.00 | | | | | | CHEVRON (SYMBOL) |
| W01-8a | 30X36 | 7.50 | | | | | | CHEVRON (SYMBOL FOR DIVIDED HIGHWAYS) |
| W03-1 | 48X48 | 16.00 | | | | | | STOP AHEAD (SYMBOL) |
| W03-2 | 48X48 | 16.00 | | | | | | YIELD AHEAD (SYMBOL) |
| W03-3 | 48X48 | 16.00 | 2 | 32.0 | | | | SIGNAL AHEAD (SYMBOL) |
| W03-4 | 48X48 | 16.00 | 4 | 64.0 | | | | BE PREPARED TO STOP |
| W03-5 | 48X48 | 16.00 | | | | | | SPEED LIMIT AHEAD |
| W04-1L | 48X48 | 16.00 | | | | | | MERGE (SYMBOL FROM LEFT) |
| W04-1R | 48X48 | 16.00 | | | | | | MERGE (SYMBOL FROM RIGHT) |
| W04-1aL | 48X48 | 16.00 | 4 | 64.0 | | | | MERGE (ARROW SYMBOL) |
| W04-1aR | 48X48 | 16.00 | 4 | 64.0 | | | | MERGE (ARROW SYMBOL) |
| W05-1 | 48X48 | 16.00 | | | | | | ROAD/BRIDGE/RAMP NARROWS |
| W05-3 | 48X48 | 16.00 | | | | | | ONE LANE BRIDGE |
| W05-5 | 48X48 | 16.00 | | | | | | NARROW LANES |
| W06-1 | 48X48 | 16.00 | | | | | | DIVIDED HIGHWAY (SYMBOL) |
| W06-2 | 48X48 | 16.00 | | | | | | DIVIDED HIGHWAY END (SYMBOL) |
| W06-3 | 48X48 | 16.00 | | | | | | TWO WAY TRAFFIC (SYMBOL) |
| W07-3a | 30X24 | 5.00 | | | | | | NEXT XX MILES (PLAQUE) |
| W08-1 | 48X48 | 16.00 | | | | | | BUMP |
| W08-2 | 48X48 | 16.00 | | | | | | DIP |
| W08-3 | 48X48 | 16.00 | | | | | | PAVEMENT ENDS |
| W08-4 | 48X48 | 16.00 | | | | | | SOFT SHOULDER |
| W08-5 | 48X48 | 16.00 | | | | | | SLIPPERY WHEN WET (SYMBOL) |
| W08-6 | 48X48 | 16.00 | | | | | | TRUCK CROSSING |
| W08-6c | 48X48 | 16.00 | | | | | | TRUCK ENTRANCE |
| W08-7 | 36X36 | 9.00 | | | | | | LOOSE GRAVEL |
| W08-7a | 36X36 | 9.00 | | | | | | FRESH OIL/LOOSE GRAVEL |
| W08-9 | 48X48 | 16.00 | | | | | | LOW SHOULDER |
| W08-11 | 48X48 | 16.00 | | | | | | UNEVEN LANES |
| W08-12 | 48X48 | 16.00 | | | | | | NO CENTER LINE |
| W08-15 | 48X48 | 16.00 | | | | | | GROOVED PAVEMENT |
| W08-15P | 30X24 | 5.00 | | | | | | MOTORCYCLE (PLAQUE) |
| W08-17 | 48X48 | 16.00 | | | | | | SHOULDER DROP-OFF (SYMBOL) |
| W08-17P | 30X24 | 5.00 | | | | | | SHOULDER DROP-OFF (PLAQUE) |
| W10-1 | 42RND. | 9.62 | | | | | | RAILROAD CROSSING |
| W012-1 | 24X24 | 4.00 | | | | | | DOUBLE DOWN ARROW (SYMBOL) |
| W012-2 | 48X48 | 16.00 | | | | | | LOW CLEARANCE (SYMBOL) |
| W012-2X | 24X18 | 3.00 | | | | | | LOW CLEARANCE (PLAQUE) |
| W012-2a | 84X24 | 14.00 | | | | | | OVERHEAD LOW CLEARANCE (FEET AND INCHES) |
| W012-4 | 120X60 | 50.00 | | | | | | LOW CLEARANCE XX FT XX IN XX MILES AHEAD |
| W012-5 | 120X60 | 50.00 | | | | | | WIDTH RESTRICTION XX FT XX IN XX MILES AHEAD |
| W013-1 | 30X30 | 6.25 | | | | | | ADVISORY SPEED (PLAQUE) 35 MPH |
| W013-1 | 30X30 | 6.25 | | | | | | ADVISORY SPEED (PLAQUE) 25 MPH |
| W016-2 | 30X24 | 5.00 | | | | | | XXX FEET (PLAQUE) |
| W016-3 | 30X24 | 5.00 | | | | | | X MILE (PLAQUE) |
| W020-1 | 48X48 | 16.00 | 4 | 64.0 | | | | ROAD/BRIDGE/RAMP WORK AHEAD |
| W020-2 | 48X48 | 16.00 | | | | | | DETOUR AHEAD |
| W020-3 | 48X48 | 16.00 | | | | | | ROAD CLOSED AHEAD |
| W020-4 | 48X48 | 16.00 | 4 | 64.0 | | | | ONE LANE ROAD AHEAD |
| W020-5 | 48X48 | 16.00 | 8 | 128.0 | | | | RIGHT/CENTER/LEFT LANE CLOSED AHEAD |
| W020-5a | 48X48 | 16.00 | 2 | 32.0 | | | | 2 RIGHT/CENTER/LEFT LANES CLOSED AHEAD |
| W020-6a | 48X48 | 16.00 | 4 | 64.0 | | | | RIGHT/CENTER/LEFT LANE CLOSED |
| W020-7a | 48X48 | 16.00 | 4 | 64.0 | | | | FLAGGER (SYMBOL) WITH FLAGS |
| W021-2 | 36X36 | 9.00 | | | | | | FRESH OIL |
| W021-5 | 48X48 | 16.00 | | | | | | SHOULDER WORK AHEAD |
| W022-1 | 48X48 | 16.00 | | | | | | BLASTING ZONE AHEAD |
| W022-2 | 42X36 | 10.50 | | | | | | TURN OFF 2-WAY RADIO AND PHONE |
| W022-3 | 42X36 | 10.50 | | | | | | END BLASTING ZONE |
| G022-1 | 21X15 | 2.19 | 8 | 17.5 | | | | WET PAINT (ARROW PIVOTS) |

| SIGN | SIZE IN. | AREA SQ.FT. | QTY EACH | TOTAL SQ.FT. | QTY RELOC EACH | TOTAL RELOC SQ.FT. | SIGN NUM. | DESCRIPTION |
|---|---|---|---|---|---|---|---|---|
| GUIDE SIGNS | | | | | | | | |
| E05-1 | 36X48 | 12.00 | | | | | | GORE EXIT |
| E05-2 | 48X36 | 12.00 | | | | | | EXIT OPEN |
| E05-2a | 48X36 | 12.00 | | | | | | EXIT CLOSED |
| G020-1 | 60X24 | 10.00 | | | | | | ROAD WORK NEXT XX MILES |
| G020-2 | 48X24 | 8.00 | | | | | | END ROAD WORK |
| G020-4 | 36X18 | 4.50 | | | | | | PILOT CAR FOLLOW ME |
| G020-4a | 42X30 | 8.75 | | | | | | PILOT CAR IN USE WAIT & FOLLOW |
| G020-5aP | 36X24 | 6.00 | 4 | 24.0 | | | | WORK ZONE (PLAQUE) |
| M04-8a | 24X18 | 3.00 | | | | | | END DETOUR |
| M04-9L | 48X36 | 12.00 | | | | | | DETOUR (LEFT ARROW) |
| M04-9R | 48X36 | 12.00 | | | | | | DETOUR (RIGHT ARROW) |
| M04-9P | 48X12 | 4.00 | | | | | | STREET NAME (PLAQUE) |
| M04-10L | 48X18 | 6.00 | | | | | | DETOUR (ARROW LEFT) |
| M04-10R | 48X18 | 6.00 | | | | | | DETOUR (ARROW RIGHT) |
| REGULATORY SIGNS | | | | | | | | |
| R1-1 | 48X48 | 13.25 | | | | | | STOP |
| R1-2 | 48TRI. | 6.93 | | | | | | YIELD |
| R1-2a | 36X36 | 9.00 | | | | | | TO ONCOMING TRAFFIC (PLAQUE) |
| R1-3P | 30X12 | 2.50 | | | | | | ALL WAY (PLAQUE) |
| R2-1 | 36X48 | 12.00 | 4 | 48.0 | | | | SPEED LIMIT 20 MPH |
| R2-1 | 36X48 | 12.00 | 4 | 48.0 | | | | SPEED LIMIT 25 MPH |
| R2-1 | 36X48 | 12.00 | 4 | 48.0 | | | | SPEED LIMIT 30 MPH |
| R2-1 | 36X48 | 12.00 | 4 | 48.0 | | | | SPEED LIMIT 35 MPH |
| R2-1 | 36X48 | 12.00 | 4 | 48.0 | | | | SPEED LIMIT 40 MPH |
| R2-1 | 36X48 | 12.00 | 4 | 48.0 | | | | SPEED LIMIT 45 MPH |
| R2-1 | 36X48 | 12.00 | 4 | 48.0 | | | | SPEED LIMIT 55 MPH |
| R3-1 | 48X48 | 16.00 | | | | | | NO RIGHT TURN (SYMBOL) |
| R3-2 | 48X48 | 16.00 | | | | | | NO LEFT TURN (SYMBOL) |
| R3-3 | 36X36 | 9.00 | | | | | | NO TURNS |
| R3-4 | 48X48 | 16.00 | | | | | | NO U-TURN (SYMBOL) |
| R3-7L | 30X30 | 6.25 | | | | | | LEFT LANE MUST TURN LEFT |
| R3-7R | 30X30 | 6.25 | | | | | | RIGHT LANE MUST TURN RIGHT |
| R4-1 | 36X48 | 12.00 | | | | | | DO NOT PASS |
| R4-2 | 36X48 | 12.00 | | | | | | PASS WITH CARE |
| R4-8a | 36X48 | 12.00 | | | | | | KEEP LEFT (HORIZONTAL ARROW) |
| R4-7a | 36X48 | 12.00 | | | | | | KEEP RIGHT (HORIZONTAL ARROW) |
| R5-1 | 30X30 | 6.25 | | | | | | DO NOT ENTER |
| R5-1a | 36X24 | 6.00 | | | | | | WRONG WAY |
| R6-1L | 54X18 | 6.75 | | | | | | ONE WAY ARROW (LEFT) |
| R6-1R | 54X18 | 6.75 | | | | | | ONE WAY ARROW (RIGHT) |
| R6-2L | 24X30 | 5.00 | | | | | | ONE WAY (LEFT) |
| R6-2R | 24X30 | 5.00 | | | | | | ONE WAY (RIGHT) |
| R9-9 | 24X12 | 2.00 | | | | | | SIDEWALK CLOSED |
| R9-11L | 24X18 | 3.00 | | | | | | SIDEWALK CLOSED AHEAD, (ARROW LEFT) CROSS HERE |
| R9-11R | 24X18 | 3.00 | | | | | | SIDEWALK CLOSED AHEAD, (ARROW RIGHT) CROSS HERE |
| R10-6 | 24X36 | 6.00 | 2 | 12.0 | | | | STOP HERE ON RED (45° ARROW) |
| R11-2 | 48X30 | 10.00 | | | | | | ROAD CLOSED |
| | | | | | | | | ROAD CLOSED XX MILES AHEAD |
| R11-3a | 60X30 | 12.50 | | | | | | LOCAL TRAFFIC ONLY |
| R11-4 | 60X30 | 12.50 | | | | | | ROAD CLOSED TO THRU TRAFFIC |
| CONST-3A | 60X48 | 20.00 | | | | | | FINE SIGN |
| CONST-3X | 56X12 | 4.67 | | | | | | SPEEDING/PASSING (PLATE) |
| MISCELLANEOUS SIGNS | | | | | | | | |
| CONST-5 | 48X36 | 12.00 | | | | | | POINT OF PRESENCE |
| CONST-5 | 96X48 | 32.00 | | | | | | POINT OF PRESENCE |
| CONST-7 | 48X24 | 8.00 | | | | | | RATE OUR WORK ZONE |
| CONST-7 | 72X36 | 18.00 | | | | | | RATE OUR WORK ZONE |
| CONST-8 | 48X36 | 12.00 | | | | | | WORK ZONE NO PHONE ZONE |

| | TOTAL |
|---|---|
| 616-10.05 CONSTRUCTION SIGNS | 1078 |
| 616-10.10 RELOCATED SIGNS | 0 |

| ITEM NUMBER | TOTAL QTY | DESCRIPTION |
|---|---|---|
| 6122008 | | IMPACT ATTENUATOR 40 MPH (SAND BARRELS) |
| 6122009 | | IMPACT ATTENUATOR 45 MPH (SAND BARRELS) |
| 6122010 | | IMPACT ATTENUATOR 50 MPH (SAND BARRELS) |
| 6122012 | | IMPACT ATTENUATOR 55 MPH (SAND BARRELS) |
| 6122014 | | IMPACT ATTENUATOR 60 MPH (SAND BARRELS) |
| 6122017 | | IMPACT ATTENUATOR 65 MPH (SAND BARRELS) |
| 6122019 | | IMPACT ATTENUATOR 70 MPH (SAND BARRELS) |
| 6122020 | | REPLACEMENT SAND BARREL |
| 6122030 | | IMPACT ATTENUATOR (RELOCATION) |
| 6123000A | | TRUCK OR TRAILER MOUNTED ATTENUATOR (TMA) |
| 6161007 | | SPEED LIMIT AND STROBE LIGHT ASSEMBLY |
| 6161008 | 8 | ADVANCED WARNING RAIL SYSTEM |
| 6161009 | 8 | FLAG ASSEMBLY |
| 6161012 | | BUOYS (BOATS KEEP OUT) |
| 6161013 | | BUOYS (NO WAKE) |
| 6161014 | | SPECIAL SIGN ASSEMBLY (BOATS KEEP OUT) |
| 6161024 | | CHANNELIZER (TRIM LINE) WITH LIGHT |
| 6161025 | 210 | CHANNELIZER (TRIM LINE) |
| 6161030 | 16 | TYPE III MOVEABLE BARRICADE |
| 6161031 | | TYPE III MOVEABLE BARRICADE WITH LIGHTS |
| 6161033 | | DIRECTION INDICATOR BARRICADE |
| 6161034 | | DIRECTION INDICATOR BARRICADE, WITH LIGHT |
| 6161040 | 4 | FLASHING ARROW PANEL |
| 6161047 | | TYPE III OBJECT MARKER |
| 6161052 | | WARNING LIGHT, TYPE B |
| 6161055 | | SEQUENTIAL FLASHING WARNING LIGHT |
| 6161070 | | TUBULAR MARKER |
| 6161095 | | RADAR SPEED ADVISORY SYSTEM |
| 6161096 | 4 | CHANGEABLE MESSAGE SIGN, COMMISSION FURNISHED/RETAINED |
| 6161098A | | CHANGEABLE MESSAGE SIGN W/O COMM. INTERFACE, CONTRACTOR FURNISHED/RETAINED |
| 6161099 | | CHANGEABLE MESSAGE SIGN WITH COMM. INTERFACE, CONTRACTOR FURNISHED/RETAINED |
| 6162000A | 1 | WORK ZONE TRAFFIC SIGNAL SYSTEM |
| 6162002 | | TEMPORARY LONG-TERM RUMBLE STRIPS |
| 6162004 | | TEMPORARY SHORT-TERM RUMBLE STRIPS |
| 6173600D | 1230 | TEMPORARY TRAFFIC BARRIER CONTRACTOR FURNISHED/RETAINED |
| 6173602B | | TEMPORARY TRAFFIC BARRIER CONTRACTOR FURNISHED/COMMISSION RETAINED |
| 6173700B | 1289 | TEMPORARY TRAFFIC BARRIER ANCHORED CONTRACTOR FURNISHED/RETAINED |
| 6174000A | 6 | TEMP. TRAFFIC BARRIER HEIGHT TRANSITION |
| 6175010A | 6444 | RELOCATING TEMPORARY TRAFFIC BARRIER |
| 6176000B | | TEMPORARY TRAFFIC BARRIER COMMISSION FURNISHED/RETAINED |
| 6177000B | | TEMP. TRAFFIC BARRIER HEIGHT TRANSITION COMMISSION FURNISHED/RETAINED |
| 6208064A | | TEMPORARY RAISED PAVEMENT MARKER |
| 9029400 | | TEMPORARY TRAFFIC SIGNALS |
| 9029401 | | TEMPORARY TRAFFIC SIGNALS AND LIGHTING |

3 REVISED 4/15/2020
MODIFIED QUANTITIES

2 REVISED 4/3/2020
QUANTITIES FROM ADDITIONAL TRAFFIC CONTROL SHEETS

NOTE:
TEMPORARY TRAFFIC CONTROL QUANTITIES CALCULATED BASED ON CONTRACTOR WORKING AT TWO DIFFERENT BRIDGES WITHIN THE SAME TIMEFRAME

2 SHEET REVISED 4/3/2020
3 SHEET REVISED 4/14/2020

SUMMARY OF QUANTITIES
SHEET 2 OF 2

STATE OF MISSOURI
MARK C. FISHER
NUMBER PE-27971
PROFESSIONAL ENGINEER
THIS SHEET HAS BEEN SIGNED, SEALED AND DATED ELECTRONICALLY.

DATE PREPARED 4/15/2020
ROUTE VAR | STATE MO
DISTRICT KC | SHEET NO. 3
COUNTY VARIOUS
JOB NO. J4P3266
CONTRACT ID.
PROJECT NO.
BRIDGE NO.

DESCRIPTION | DATE

MISSOURI HIGHWAYS AND TRANSPORTATION COMMISSION
105 WEST CAPITOL
JEFFERSON CITY, MO 65102
1-888-ASK-MODOT (1-888-275-6636)

IF A SEAL IS PRESENT ON THIS SHEET IT HAS BEEN ELECTRONICALLY SEALED AND DATED.

REV. 3

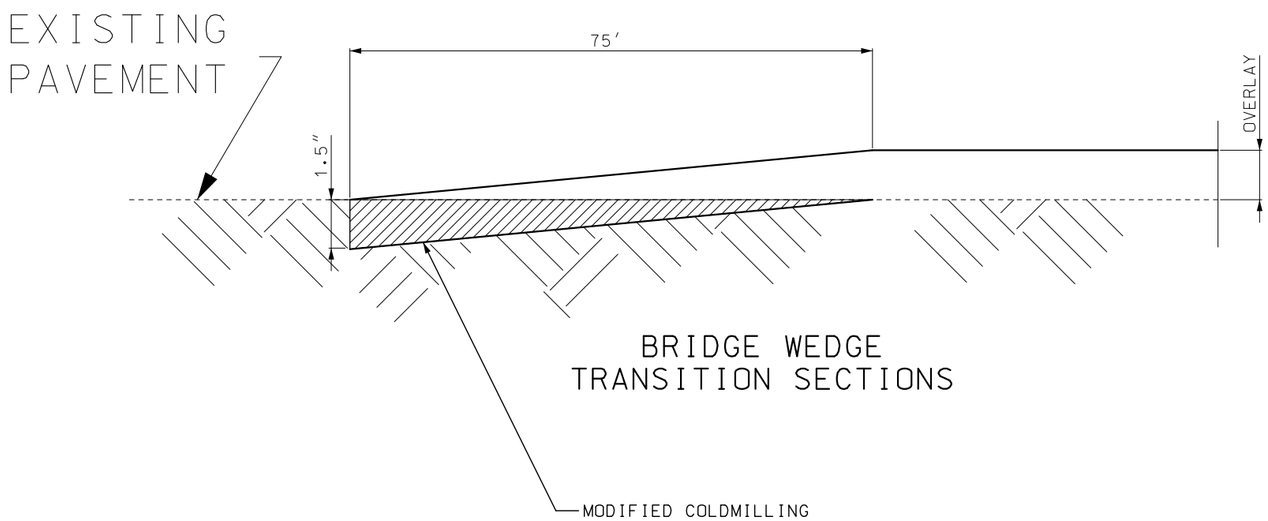


SPECIAL SHEET
1 OF 1

STATE OF MISSOURI
MARK C. FISHER
NUMBER
PE-27971
PROFESSIONAL ENGINEER

THIS SHEET HAS BEEN SIGNED, SEALED AND DATED ELECTRONICALLY.

| DATE PREPARED | |
|---|---|
| 2/3/2020 | |
| ROUTE | STATE |
| VAR | MO |
| DISTRICT | SHEET NO. |
| KC | 4 |
| COUNTY | |
| VARIOUS | |
| JOB NO. | |
| J4P3266 | |
| CONTRACT ID. | |
| PROJECT NO. | |
| BRIDGE NO. | |

| DESCRIPTION | DATE |
|---|---|
| | |

MISSOURI HIGHWAYS AND TRANSPORTATION COMMISSION

105 WEST CAPITOL
JEFFERSON CITY, MO 65102
1-888-ASK-MODOT (1-888-275-6636)

IF A SEAL IS PRESENT ON THIS SHEET IT HAS BEEN ELECTRONICALLY SEALED AND DATED.

REV.

# SPACING AND TAPER LENGTHS FOR WORK ZONE SIGNS, CHANNELIZERS AND CONCRETE BARRIER

| SIGN SPACING FOR ADVANCE SIGN SERIES (1) (2) | | |
|---|---|---|
| PERMANENT POSTED SPEED MPH | UNDIVIDED HIGHWAYS | DIVIDED HIGHWAYS |
| 0-35 | 200′ | 200′ |
| 40-45 | 350′ | 500′ |
| 50-55 | 500′ | 1000′ |
| 60-70 | 1000′ | SA - 1000′ SB - 1500′ SC - 2640′ |

| TAPER LENGTHS AND END TREATEMENTS FOR CONCRETE BARRIER | | | | |
|---|---|---|---|---|
| PERMANENT POSTED SPEED MPH | MINIMUM LANE TAPER LENGTH (3) | | | END TREATMENT (4) |
| | 10′ | 11′ | 12′ | |
| LT 40 | 160′ | 168′ | 176′ | BARRIER HEIGHT TRANSITION |
| GT 40 | 160′ | 168′ | 176′ | APPROVED CRASH CUSHION |

| TAPER LENGTHS AND SPACING FOR CHANNELIZERS | | | | | | | |
|---|---|---|---|---|---|---|---|
| PERMANENT POSTED SPEED MPH | MINIMUM LANE TAPER LENGTH (3) | | | MINIMUM SHOULDER TAPER LENGTH BASED ON 10′ SHOULDER | BUFFER LENGTH FT | MAXIMUM CHANNELIZER SPACING | |
| | 10′ | 11′ | 12′ | | | THROUGH TAPER | THROUGH WORK AREA |
| 0-35 | 205′ | 225′ | 245′ | 70′ | 280′ | 35′ | 40′ |
| 40-45 | 450′ | 495′ | 540′ | 150′ | 400′ | 40′ | 80′ |
| 50-55 | 550′ | 605′ | 660′ | 185′ | 560′ | 50′ | 80′ |
| 60-70 | 700′ | 770′ | 840′ | 235′ | 840′ | 60′ | 120′ |

NOTE:

(1) SPACING BETWEEN SIGNS AND SPACING BETWEEN LAST SIGN AND FLAGGER, BEGINNING OF TAPER, OF SIGNED CONDITION.

(2) SPACING MAY BE ADJUSTED AS NECESSARY TO MEET FIELD CONDITIONS.

(3) TAPER LENGTHS SHOWN INCLUDE LENGTH REQUIRED FOR LANE AND 10' SHOULDER

(4) CONCRETE BARRIER MAY BE INSTALLED AT 8:1 FLARE RATE FROM THE SHOULDER POINT OF THE LIMITS OF THE CLEAR ZONE WHERE THE SIDE SLOPE IS 6:1 OR FLATTER

TA-51

TEMPORARY
TRAFFIC CONTROL
SHEET 1 OF 9

STATE OF MISSOURI
MARK C. FISHER
NUMBER PE-27971
PROFESSIONAL ENGINEER

THIS SHEET HAS BEEN SIGNED, SEALED AND DATED ELECTRONICALLY.

DATE PREPARED 2/3/2020

| ROUTE | STATE |
|---|---|
| VAR | MO |
| DISTRICT | SHEET NO. |
| KC | 5 |

COUNTY VARIOUS

JOB NO. J4P3266

CONTRACT ID.

PROJECT NO.

BRIDGE NO.

| DESCRIPTION | DATE |
|---|---|
| | |

MISSOURI HIGHWAYS AND TRANSPORTATION COMMISSION

105 WEST CAPITOL
JEFFERSON CITY, MO 65102
1-888-ASK-MODOT (1-888-275-6636)

IF A SEAL IS PRESENT ON THIS SHEET IT HAS BEEN ELECTRONICALLY SEALED AND DATED.

REV.

EFFECTIVE: 02-01-2009

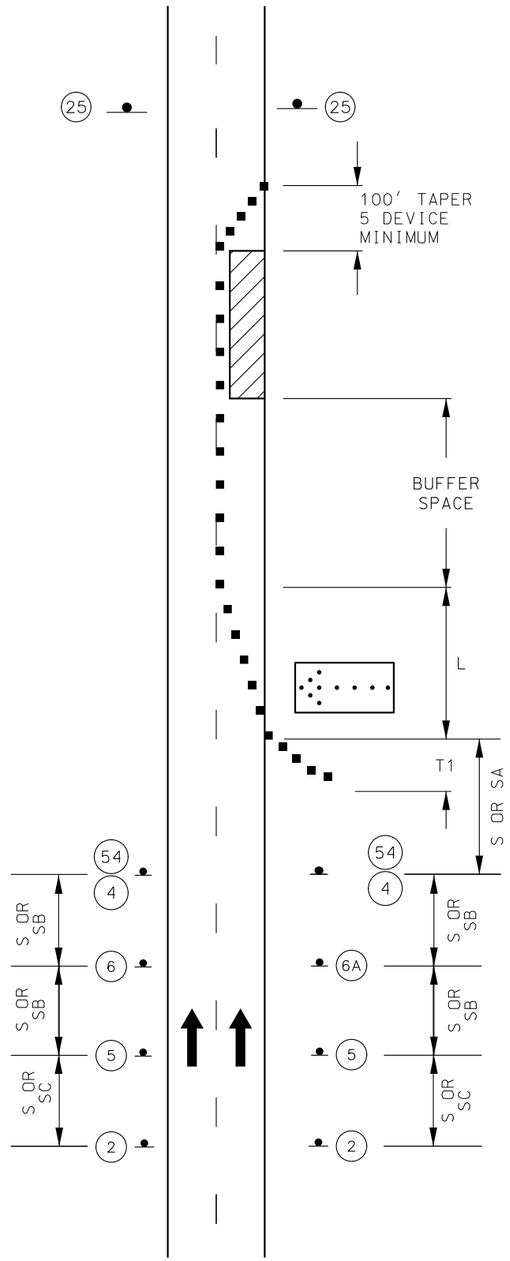


TWO-LANE DIVIDED HIGHWAY

TA-33

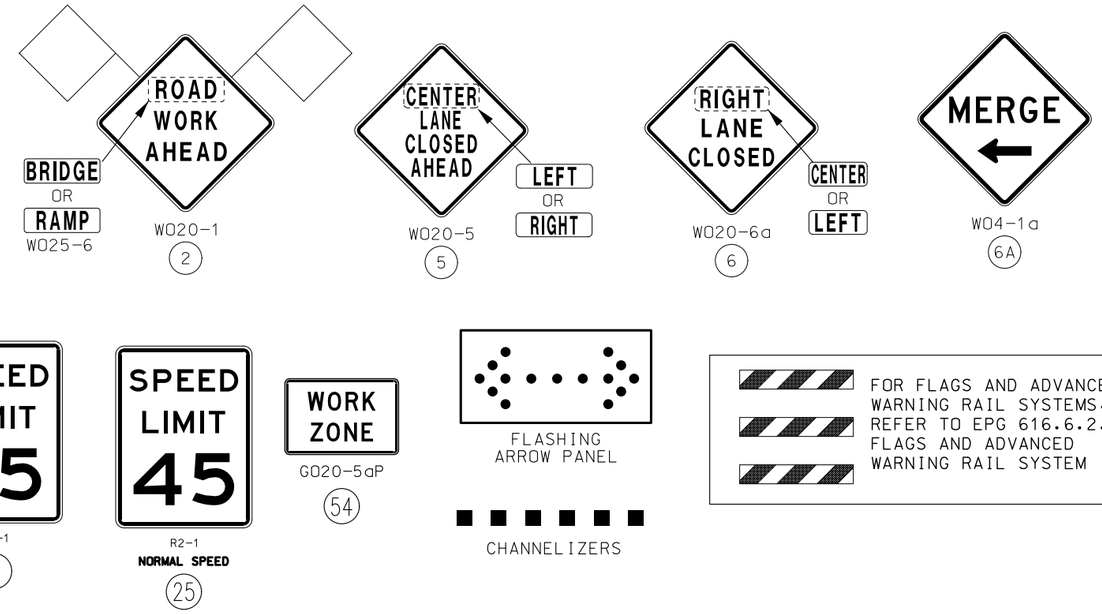


NOTES:

SEE TRAFFIC CONTROL SHEET 1 FOR WORK ZONE SPEED LIMIT GUIDELINES.

SEE TRAFFIC CONTROL SHEET 1 FOR SIGN SPACING, DEVICE SPACING AND CHANNELIZING TAPER LENGTHS.

REMOVE AND/OR MODIFY ANY EXISTING PAVEMENT MARKING AS NEEDED.

TEMPORARY PAVEMENT MARKING REQUIRED WITH LONG TERM CLOSURES.

THIS INFORMATION ALSO SHALL BE USED WHEN WORK IS BEING PREFORMED IN THE LANE ADJACENT TO THE MEDIAN ON A DIVIDED HIGHWAY. IN THIS CASE, THE LEFT LANE CLOSED SIGNS AND THE CORRESPONDING MERGE OR LANE ENDS SIGN SHALL BE SUBSTITUTED.

WHEN A SIDE ROAD INTERSECTS THE HIGHWAY WITHIN THE TTC ZONE ADDITIONAL TTC DEVICES SHALL BE PLACED AS NEEDED.

TEMPORARY TRAFFIC BARRIERS, IF USED SHALL COMPLY WITH THE PROVISIONS IN EPG 616.6.85 TEMPORARY TRAFFIC BARRIER AND REVIEW TA-34 LANE CLOSURE WITH A TEMPORARY TRAFFIC BARRIER.

REVIEW EPG TA-34a LANE CLOSURE WITH WIDTH AND LANE RESTRICTIONS DE/CM FOR A LANE CLOSURE WITH WIDTH RESTRICTIONS.

AN ARROW BOARD SHALL BE USED WHEN A FREEWAY LANE IS CLOSED. WHEN MORE THAN ONE FREEWAY LANE IS CLOSED, A SEPARATE ARROW BOARD SHALL BE USED FOR EACH CLOSED LANE.

REVIEW EPG 616.6.83 WARNING LIGHTS WHEN SEQUENTIAL OR WARNING LIGHTS SHOULD BE USED ON NIGHTTIME OPERATIONS.

IF RUMBLE STRIPS ARE USED, REVIEW EPG 616.6.87 RUMBLE STRIPS.

FOR FLAGS AND ADVANCE WARNING RAIL SYSTEM, REFER TO EPG 616.6.2.2 FLAG AND ADVANCE WARNING RAIL SYSTEM.

REVIEW EPG 616.6.63 CHANNELIZING DEVICES FOR DIFFERENT TYPES AND GUIDELINES FOR THE DEVICES

STATIONARY
LANE CLOSURE
ON DIVIDED HIGHWAY
TEMPORARY
TRAFFIC CONTROL
SHEET 2 OF 9

STATE OF MISSOURI
MARK C. FISHER
NUMBER PE-27971
PROFESSIONAL ENGINEER

THIS SHEET HAS BEEN SIGNED, SEALED AND DATED ELECTRONICALLY.

| DATE PREPARED | |
|---|---|
| 2/3/2020 | |
| ROUTE | STATE |
| VAR | MO |
| DISTRICT | SHEET NO. |
| KC | 6 |
| COUNTY | |
| VARIOUS | |
| JOB NO. | |
| J4P3266 | |
| CONTRACT ID. | |
| PROJECT NO. | |
| BRIDGE NO. | |

| DESCRIPTION | DATE |
|---|---|
| | |

MISSOURI HIGHWAYS AND TRANSPORTATION COMMISSION
105 WEST CAPITOL
JEFFERSON CITY, MO 65102
1-888-ASK-MODOT (1-888-275-6636)

IF A SEAL IS PRESENT ON THIS SHEET IT HAS BEEN ELECTRONICALLY SEALED AND DATED.

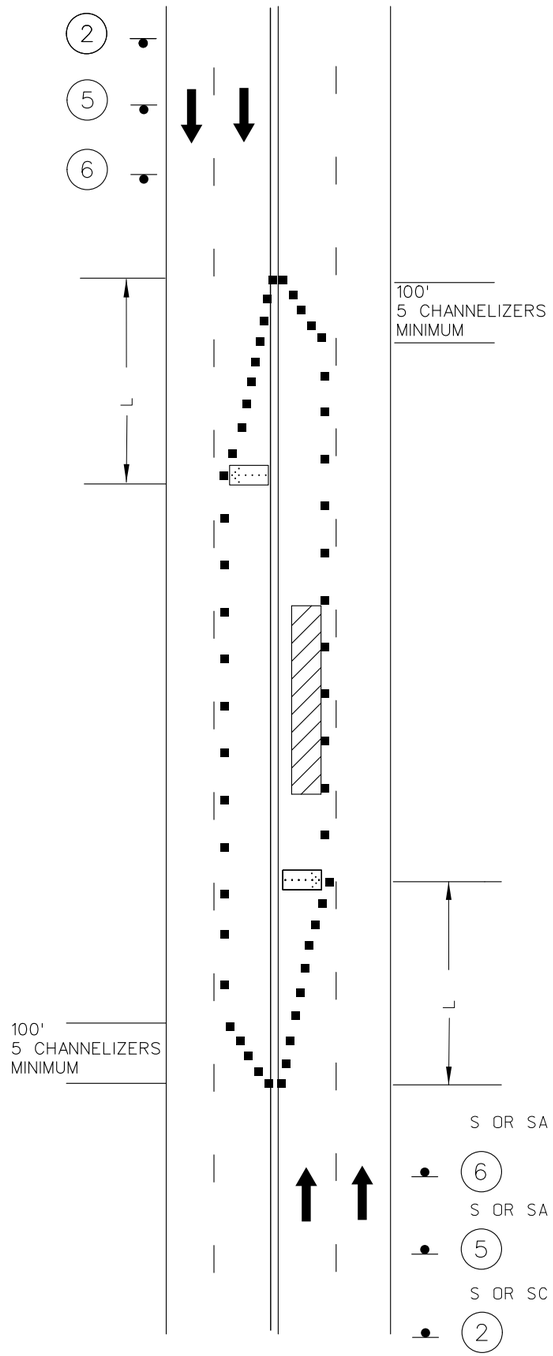


LANE CLOSURE ON
MULTI-LANE UNDIVIDED HIGHWAY

NOTES:

(1) SIGN (5) MAY BE OMITTED IN URBAN AREAS WHERE THERE IS NOT SUFFICIENT SPACE FOR THE FULL SIGN SERIES, AND THE POSTED SPEED LIMIT PRIOR TO CONSTRUCTION IS 45 MPH OR LESS.

(2) SIGN (44) IS ONLY REQUIRED WHERE FULL LENGTH SHIFTING TAPERS CANNOT BE PROVIDED.

(3) SEE TRAFFIC CONTROL SHEET 1 FOR WORK ZONE SPEED LIMIT GUIDELINES.

(4) SEE TRAFFIC CONTROL SHEET 1 FOR SIGN SPACING, DEVICE SPACING AND CHANNELIZING TAPER LENGTHS.

(5) REMOVE AND/OR MODIFY ANY EXISTING PAVEMENT MARKING AS NEEDED.

(6) TEMPORARY PAVEMENT MARKING REQUIRED WITH LONG TERM CLOSURES.

(7) FOR SHORT TERM OPERATIONS WHERE IT IS NOT FEASIBLE TO MODIFY PAVEMENT MARKING, A 10' DEVICE SPACING IS USED IN THE SHIFTING TAPERS AND WHERE TRAFFIC IS GUIDED ACROSS OTHER CONFLICTING PAVEMENT MARKING, ALL OTHER SPACINGS ARE ONE-HALF OF THE TYPICAL SPACING.

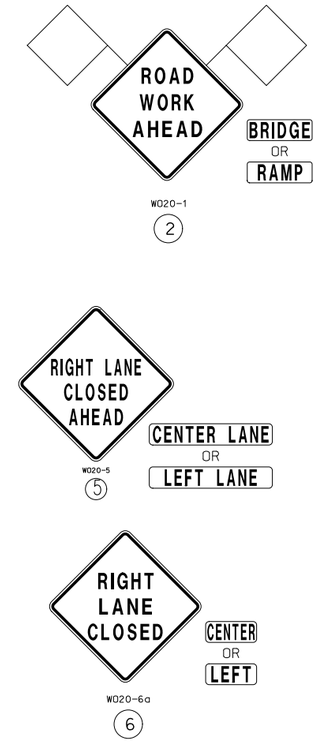


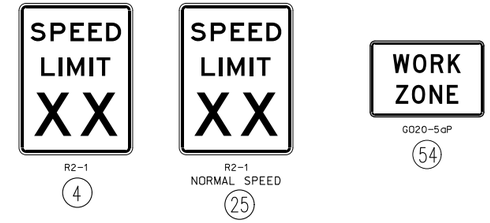


FOR FLAGS AND ADVANCE WARNING RAIL SYSTEMS, REFER TO EPG 616.6.2.2 FLAGS AND ADVANCED WARNING RAIL SYSTEM

CENTER TURN LANE
LANE CLOSURE
TEMPORARY
TRAFFIC CONTROL
SHEET 3 OF 9

STATE OF MISSOURI
MARK C. FISHER
NUMBER PE-27971
PROFESSIONAL ENGINEER

THIS SHEET HAS BEEN SIGNED, SEALED AND DATED ELECTRONICALLY.

| | |
|---|---|
| DATE PREPARED | 2/3/2020 |
| ROUTE | VAR |
| STATE | MO |
| DISTRICT | KC |
| SHEET NO. | 7 |
| COUNTY | VARIOUS |
| JOB NO. | J4P3266 |
| CONTRACT ID. | |
| PROJECT NO. | |
| BRIDGE NO. | |

DESCRIPTION

DATE

MISSOURI HIGHWAYS AND TRANSPORTATION COMMISSION

105 WEST CAPITOL
JEFFERSON CITY, MO 65102
1-888-ASK-MODOT (1-888-275-6636)

IF A SEAL IS PRESENT ON THIS SHEET IT HAS BEEN ELECTRONICALLY SEALED AND DATED.

REV.

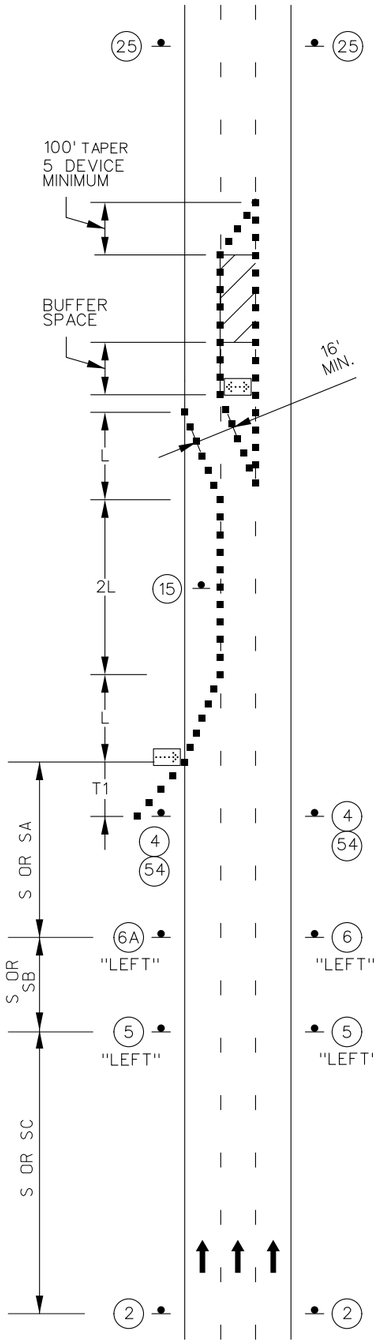


INTERIOR LANE

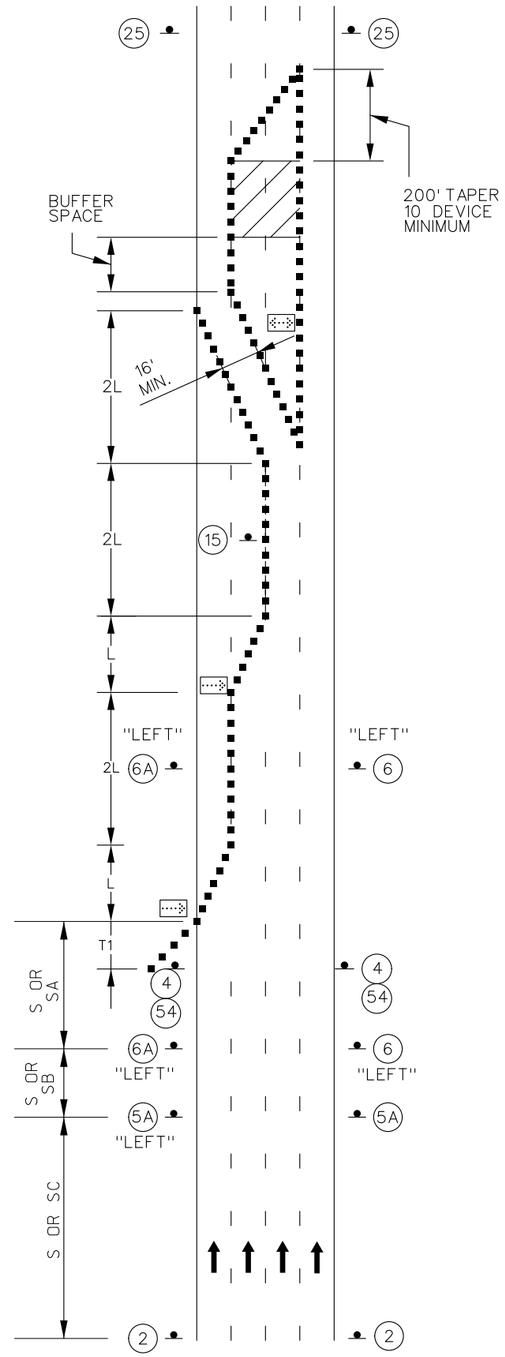


TWO INTERIOR LANES

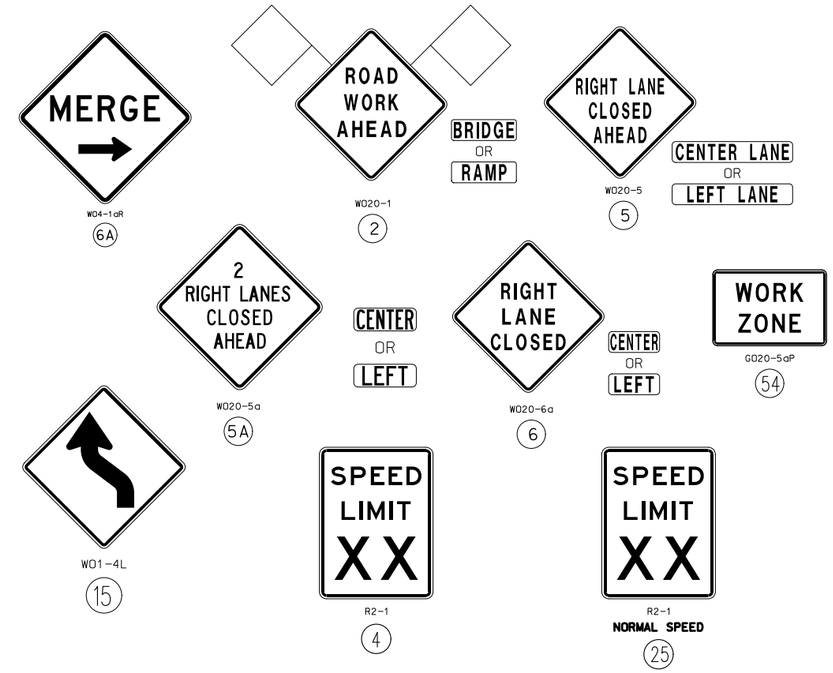

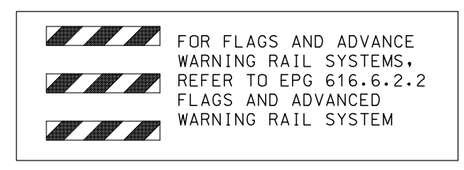


NOTES:

(1). SEE TRAFFIC CONTROL SHEET 1 FOR WORK ZONE SPEED LIMIT GUIDELINES.

(2). SEE TRAFFIC CONTROL SHEET 1 FOR SIGN SPACING, DEVICE SPACING AND CHANNELIZING TAPER LENGTHS.

(3). REMOVE AND/OR MODIFY EXISTING PAVEMENT MARKING AS NEEDED.

(4). TEMPORARY PAVEMENT MARKING REQUIRED WITH LONG TERM LANE CLOSURES.

(5). ALTERNATIVE TEMPORARY TRAFFIC CONTROL SET-UPS SHOULD BE CONSIDERED WHEN REDUCTION IN CAPACITY CANNOT BE TOLERATED.

(6). FOR NIGHTTIME OPERATIONS, REVIEW EPG 616.6.83 WARNING LIGHT FOR USE OF SEQUENTIAL LIGHTS.

TA-38 - LANE CLOSURE
INTERIOR LANE CLOSURES OF MULTI-LANE DIVIDED HIGHWAY

INTERIOR LANE
CLOSURE ON FREEWAY
TEMPORARY
TRAFFIC CONTROL
SHEET 4 OF 9

STATE OF MISSOURI
MARK C. FISHER
NUMBER PE-27971
PROFESSIONAL ENGINEER
THIS SHEET HAS BEEN SIGNED, SEALED AND DATED ELECTRONICALLY.

| DATE PREPARED | |
|---|---|
| 2/3/2020 | |
| ROUTE: VAR | STATE: MO |
| DISTRICT: KC | SHEET NO.: 8 |
| COUNTY: VARIOUS | |
| JOB NO.: J4P3266 | |
| CONTRACT ID. | |
| PROJECT NO. | |
| BRIDGE NO. | |

| DATE | DESCRIPTION |
|---|---|
| | |

MISSOURI HIGHWAYS AND TRANSPORTATION COMMISSION
105 WEST CAPITOL
JEFFERSON CITY, MO 65102
1-888-ASK-MODOT (1-888-275-6636)

IF A SEAL IS PRESENT ON THIS SHEET IT HAS BEEN ELECTRONICALLY SEALED AND DATED.

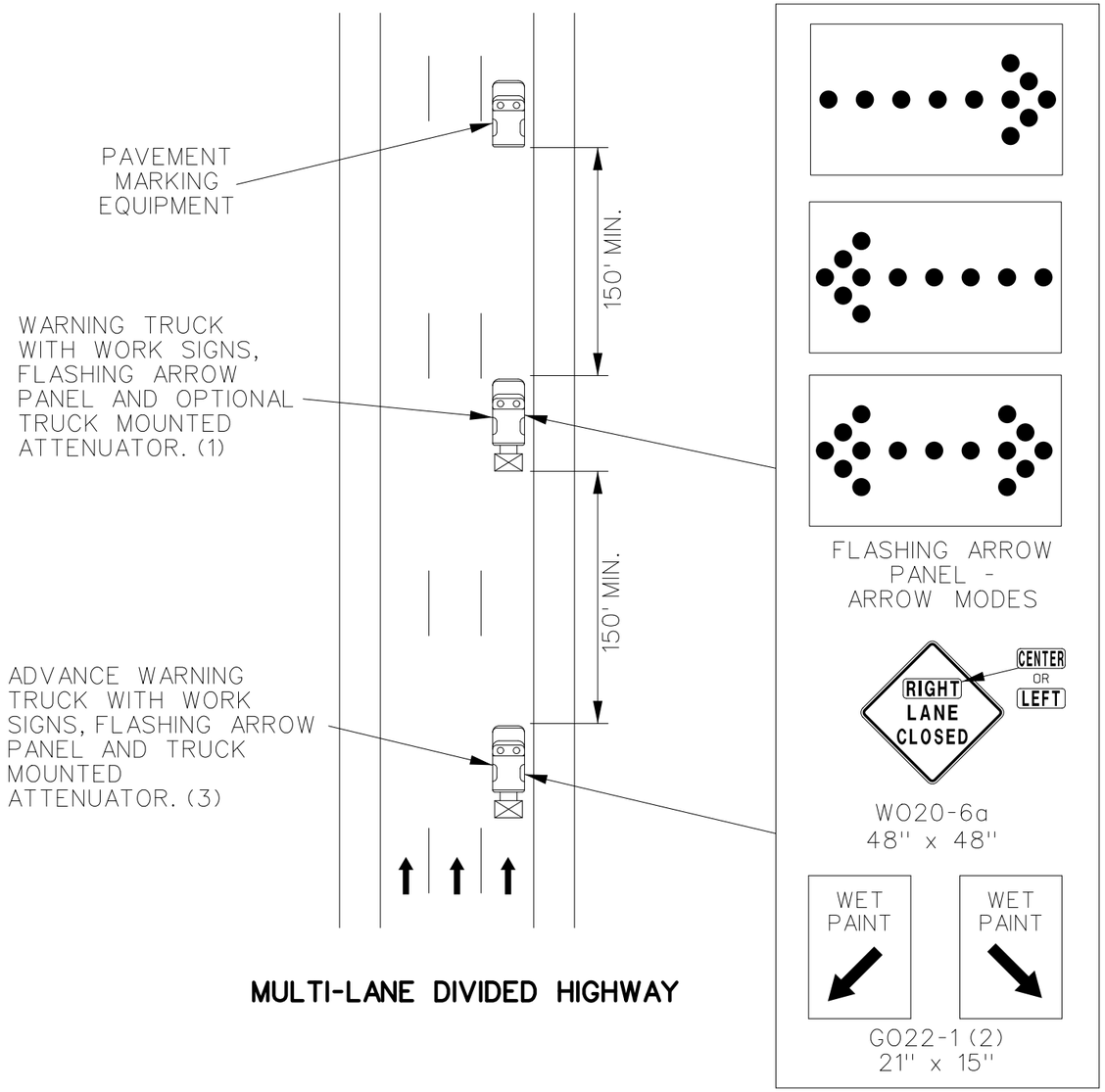


**MULTI-LANE DIVIDED HIGHWAY**

**MOVING OPERATION ON HIGHWAY OPEN TO TRAFFIC**

NOTES:

ALL SIGNS HAVE TYPE 3 FLUORESCENT ORANGE RETROFLECTIVE SHEETING.

UPON APPROVAL OF THE ENGINEER, THE CONTRACTOR MAY PROVIDE ADDITIONAL PROTECTIVE TRUCKS EQUIPPED WITH PROPER WARNING DEVICES.

PROTECTIVE TRUCK AND WORK VEHICLES SHALL DISPLAY HIGH-INTENSITY ROTATING, FLASHING, OSCILLATING OR STROBE LIGHTS.

VEHICLE HAZARD WARNING SIGNALS SHALL NOT BE USED INSTEAD OF THE VEHICLE'S HIGH -INTENSITY ROTATING FLASHING, FLASHING, OSCILLATING, OR STROBE LIGHTS.

(1). TRUCK IS OPTIONAL ON TWO-LANE UNDIVIDED HIGHWAYS IF SIGNING AND ARROW BOARD IS MOUNTED ON THE PAVEMENT MARKING EQUIPMENT.

(2). WET PAINT SIGNS ARE INSTALLED TO INDICATE THE SIDE IN WHICH THE PAVEMENT MARKING MATERIAL IS BEING APPLIED. AT THE CONTRACTOR'S OPTION. A FRONT FACING WET PAINT SIGN MAY BE INSTALLED ON THE LEFT SIDE OF THE PAVEMENT MARKING EQUIPMENT.

(3). ADVANCE WARNING TRUCK IS POSITIONED AT THE NO TRACK POINT OF THE PAVEMENT MARKING MATERIAL OR SPACING SHOWN, WHICHEVER IS GREATER.

**TA-17A**

MOVING OPERATION
OPEN TO TRAFFIC
TEMPORARY
TRAFFIC CONTROL
SHEET 5 OF 9

STATE OF MISSOURI
MARK C. FISHER
NUMBER PE-27971
PROFESSIONAL ENGINEER

THIS SHEET HAS BEEN SIGNED, SEALED AND DATED ELECTRONICALLY.

| DATE PREPARED | |
|---|---|
| 2/3/2020 | |
| ROUTE: VAR | STATE: MO |
| DISTRICT: KC | SHEET NO.: 9 |
| COUNTY: VARIOUS | |
| JOB NO.: J4P3266 | |
| CONTRACT ID. | |
| PROJECT NO. | |
| BRIDGE NO. | |

| DATE | DESCRIPTION |
|---|---|
| | |

MISSOURI HIGHWAYS AND TRANSPORTATION COMMISSION
105 WEST CAPITOL
JEFFERSON CITY, MO 65102
1-888-ASK-MODOT (1-888-275-6636)

IF A SEAL IS PRESENT ON THIS SHEET IT HAS BEEN ELECTRONICALLY SEALED AND DATED.

EFFECTIVE: 02-01-2009

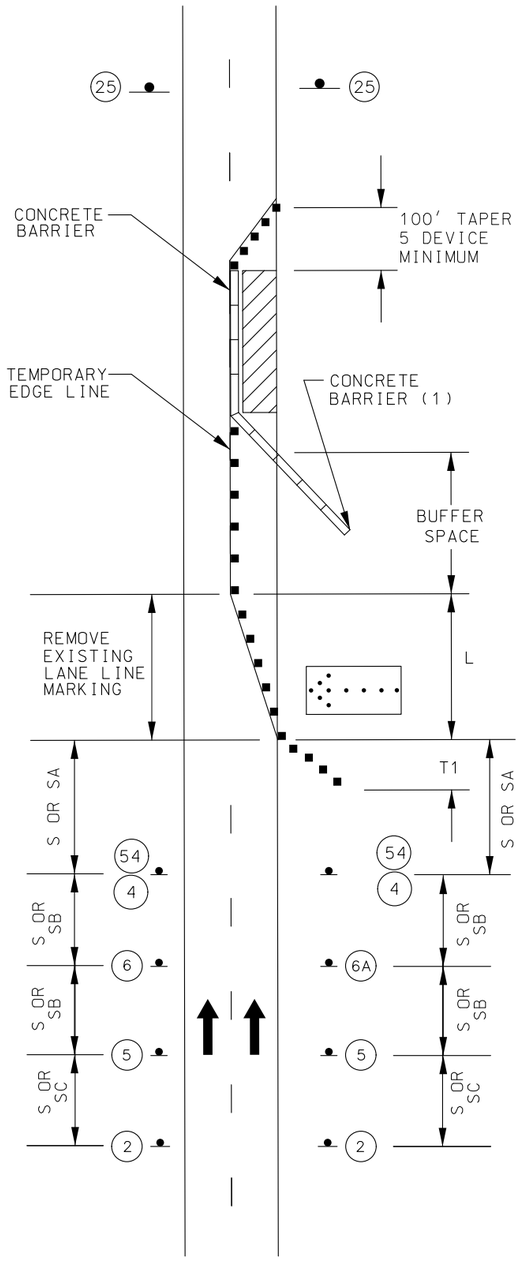


TWO-LANE DIVIDED HIGHWAY
WITH BARRIER

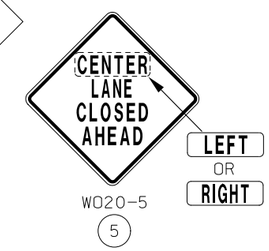

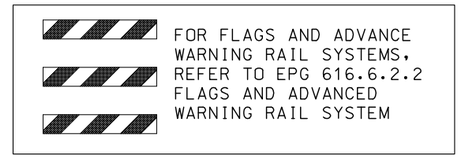


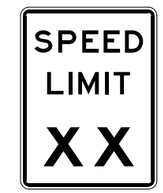


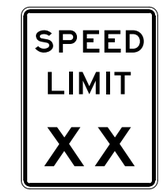

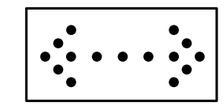

FLASHING
ARROW PANEL

CHANNELIZERS

NOTES:

SEE TRAFFIC CONTROL SHEET 1 FOR WORK ZONE SPEED LIMIT GUIDELINES.

SEE TRAFFIC CONTROL SHEET 1 FOR SIGN SPACING, DEVICE SPACING AND CHANNELIZING TAPER LENGTHS.

REMOVE AND/OR MODIFY ANY EXISTING PAVEMENT MARKING AS NEEDED.

TEMPORARY PAVEMENT MARKING REQUIRED WITH LONG TERM CLOSURES.

REVIEW TA-33 STATIONARY LANE CLOSURE.

SEE SHEET FIGURE TA-34A, LANE CLOSURE WITH WIDTH AND LANE RESTRICTION-DE/CM FOR A LANE CLOSURE WITH WIDTH RESTRICTION.

TEMPORARY TRAFFIC BARRIERS, IF USED SHALL COMPLY WITH THE PROVISIONS IN EPG 616.6.85 TEMPORARY TRAFFIC BARRIERS.

FOR NIGHTTIME OPERATIONS, REVIEW EPG 616.6.83 WARNING LIGHTS FOR USE OF SEQUENTIAL LIGHTS.

IF RUMBLE STRIPS ARE USED, REVIEW EPG 616.6.87 RUMBLE STRIPS.

REVIEW EPG 616.6.63 CHANNELIZING DEVICES FOR DIFFERENT TYPES AND GUIDELINES FOR THE DEVICES.

(1) FLARE BARRIER TO EXTEND BEYOND CLEAR ZONE OR FLARE BARRIER TO THE EDGE LINE AND USE APPROVED END TREATMENT.

CONCRETE BARRIER SHALL BE INSTALLED AT AN 8:1 FLARE RATE WITHIN THE TRAVEL LANES.

CONCRETE BARRIER MAY BE INSTALLED AT AN 8:1 FLARE RATE FROM THE SHOULDER POINT TO THE LIMITS OF THE CLEAR ZONE WHERE THE SIDE SLOPE IS 6:1 OR FLATTER.

APPROVED CRASH CUSHION ARE TO BE USED WHEN THE POSTED SPEED LIMIT PRIOR TO ROAD WORK IS GREATER THAN OR EQUAL TO 40 MPH.

BARRIER HEIGHT TRANSITION MAY BE USED WHEN THE POSTED SPEED LIMIT PRIOR TO ROAD WORK IS LESS THAN 40 MPH.

TA-34

LANE CLOSURE WITH
TEMPORARY TRAFFIC BARRIER
TEMPORARY
TRAFFIC CONTROL
SHEET 6 OF 9

STATE OF MISSOURI
MARK C. FISHER
NUMBER PE-27971
PROFESSIONAL ENGINEER
THIS SHEET HAS BEEN SIGNED, SEALED AND DATED ELECTRONICALLY.

| DATE PREPARED | |
|---|---|
| 2/3/2020 | |
| ROUTE | STATE |
| VAR | MO |
| DISTRICT | SHEET NO. |
| KC | 10 |
| COUNTY | |
| VARIOUS | |
| JOB NO. | |
| J4P3266 | |
| CONTRACT ID. | |
| PROJECT NO. | |
| BRIDGE NO. | |

| DATE | DESCRIPTION |
|---|---|

IF A SEAL IS PRESENT ON THIS SHEET IT HAS BEEN ELECTRONICALLY SEALED AND DATED.

MISSOURI HIGHWAYS AND TRANSPORTATION COMMISSION
105 WEST CAPITOL
JEFFERSON CITY, MO 65102
1-888-ASK-MODOT (1-888-275-6636)

EFFECTIVE: 02-01-2009

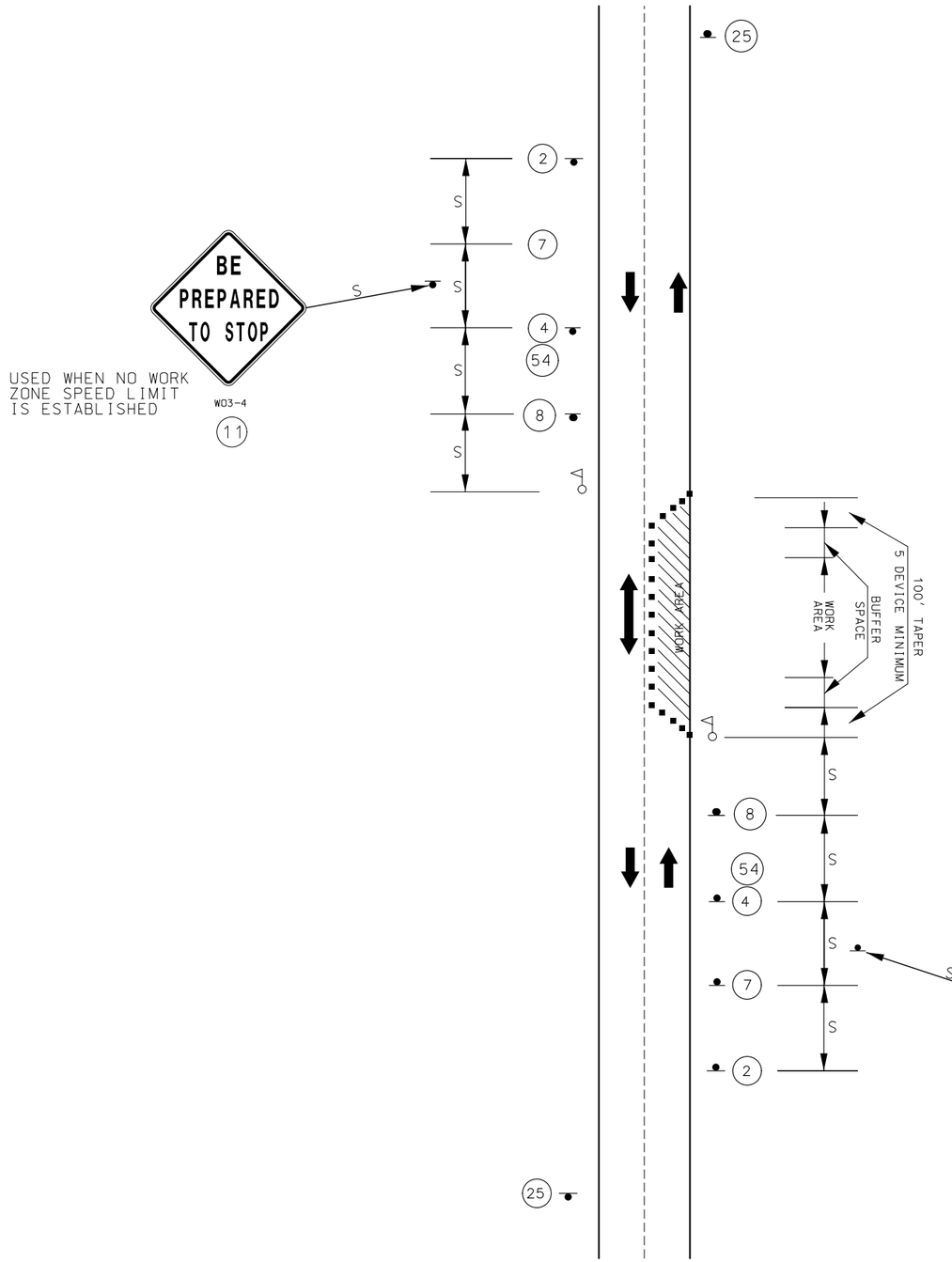


TA-10
LANE CLOSURE
ON TWO-LANE
ROAD USING FLAGGERS

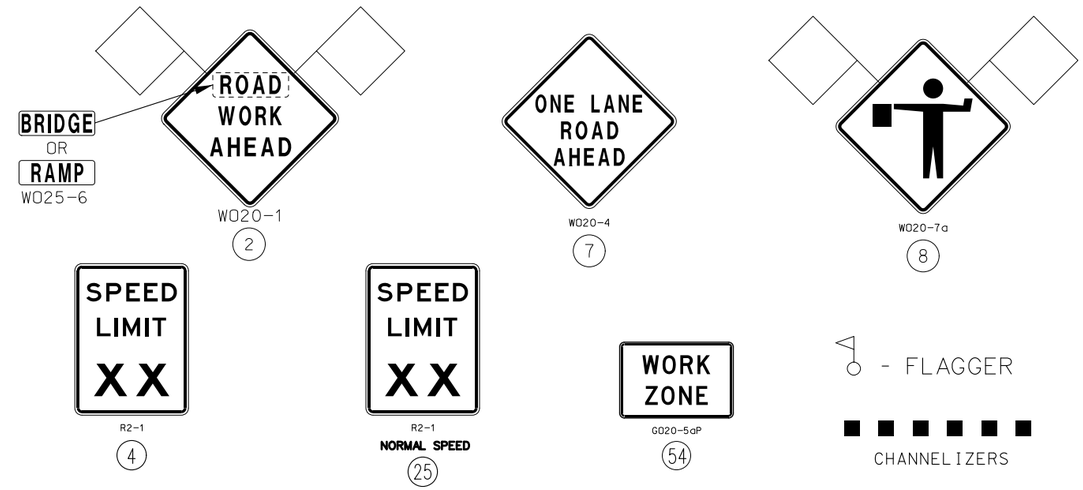


NOTES: SEE TRAFFIC CONTROL SHEET 1 FOR WORK ZONE SPEED LIMIT GUIDELINES.

SEE TRAFFIC CONTROL SHEET 1 FOR SIGN SPACING, DEVICE SPACING AND CHANNELIZING TAPER LENGTHS.

AUTOMATED FLAGGER ASSISTANCE DEVICES (AFAD) AND PORTABLE SIGNAL FLAGGING DEVICES (PSFD) MAY BE USED AS AND ALTERNATIVE FLAGGING OPERATION.

AFAD AND PSFD TYPICAL APPLICATIONS AND CRITERIA ARE LOCATED AT THE FOLLOWING: EPG 616.8.10A (TA-10A) LANE CLOSURE ON TWO-LANE HIGHWAYS USING AUTOMATED FLAGGER ASSISTANCE DEVICE WITH RED AND AMBER SIGNAL SYSTEM & EPG 616.8.10 (TA-10C) LANE CLOSURE ON TWO-LANE HIGHWAYS USING PORTABLE SIGNAL FLAGGING DEVICE.

IF RUMBLE STRIPS ARE USED, REVIEW 616.6.87 RUMBLE STRIPS.

IF USED AT NIGHT, THE FLAGGER STATIONS SHALL BE ILLUMINATED WITH AN AVERAGE MAINTAINED INTENSITY OF 0.6 FOOT CANDLES (6.5 LUX).

USED WHEN NO WORK ZONE SPEED LIMIT IS ESTABLISHED

FOR FLAGS AND ADVANCE WARNING RAIL SYSTEMS, REFER TO EPG 616.6.2.2 FLAGS AND ADVANCED WARNING RAIL SYSTEM

ONE LANE CLOSURE TWO WAY
FLAGGER CONTROL
TEMPORARY
TRAFFIC CONTROL
SHEET 7 OF 9

STATE OF MISSOURI
MARK C. FISHER
NUMBER PE-27971
PROFESSIONAL ENGINEER

THIS SHEET HAS BEEN SIGNED, SEALED AND DATED ELECTRONICALLY.

| | |
|---|---|
| DATE PREPARED | 2/3/2020 |
| ROUTE | VAR |
| STATE | MO |
| DISTRICT | KC |
| SHEET NO. | 11 |
| COUNTY | VARIOUS |
| JOB NO. | J4P3266 |
| CONTRACT ID. | |
| PROJECT NO. | |
| BRIDGE NO. | |

| DATE | DESCRIPTION |
|---|---|
| | |

MISSOURI HIGHWAYS AND TRANSPORTATION COMMISSION
105 WEST CAPITOL
JEFFERSON CITY, MO 65102
1-888-ASK-MODOT (1-888-275-6636)

IF A SEAL IS PRESENT ON THIS SHEET IT HAS BEEN ELECTRONICALLY SEALED AND DATED.

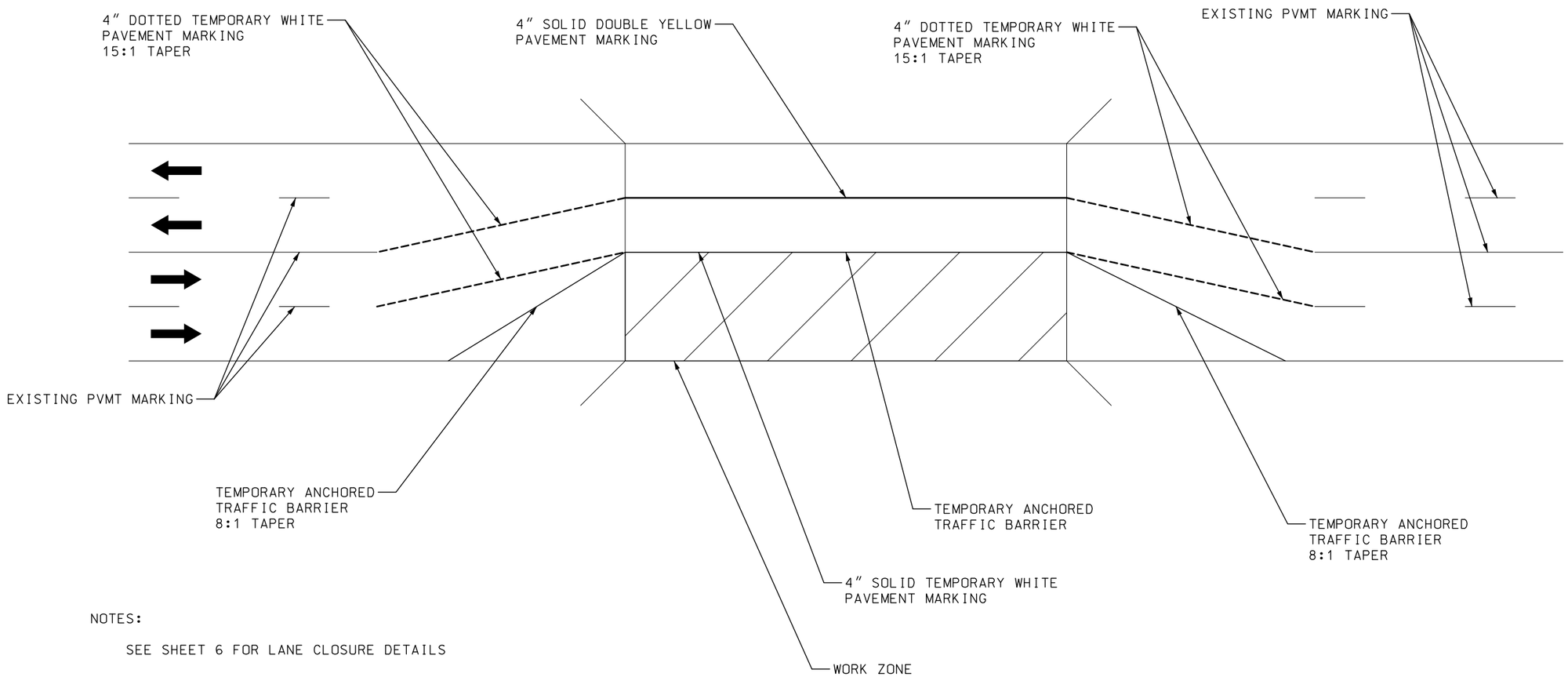


NOTES:

SEE SHEET 6 FOR LANE CLOSURE DETAILS

NOT TO SCALE

BRIDGE CROSSOVER
TRAFFIC CONTROL SHEET
SHEET 8 OF 9

STATE OF MISSOURI
MARK C. FISHER
NUMBER PE-27971
PROFESSIONAL ENGINEER

THIS SHEET HAS BEEN SIGNED, SEALED AND DATED ELECTRONICALLY.

| DATE PREPARED | |
|---|---|
| 2/3/2020 | |
| ROUTE | STATE |
| VAR | MO |
| DISTRICT | SHEET NO. |
| KC | 12 |
| COUNTY | |
| VARIOUS | |
| JOB NO. | |
| J4P3266 | |
| CONTRACT ID. | |
| PROJECT NO. | |
| BRIDGE NO. | |

| DATE | DESCRIPTION |
|---|---|
| | |

IF A SEAL IS PRESENT ON THIS SHEET IT HAS BEEN ELECTRONICALLY SEALED AND DATED.

MISSOURI HIGHWAYS AND TRANSPORTATION COMMISSION

105 WEST CAPITOL
JEFFERSON CITY, MO 65102
1-888-ASK-MODOT (1-888-275-6636)

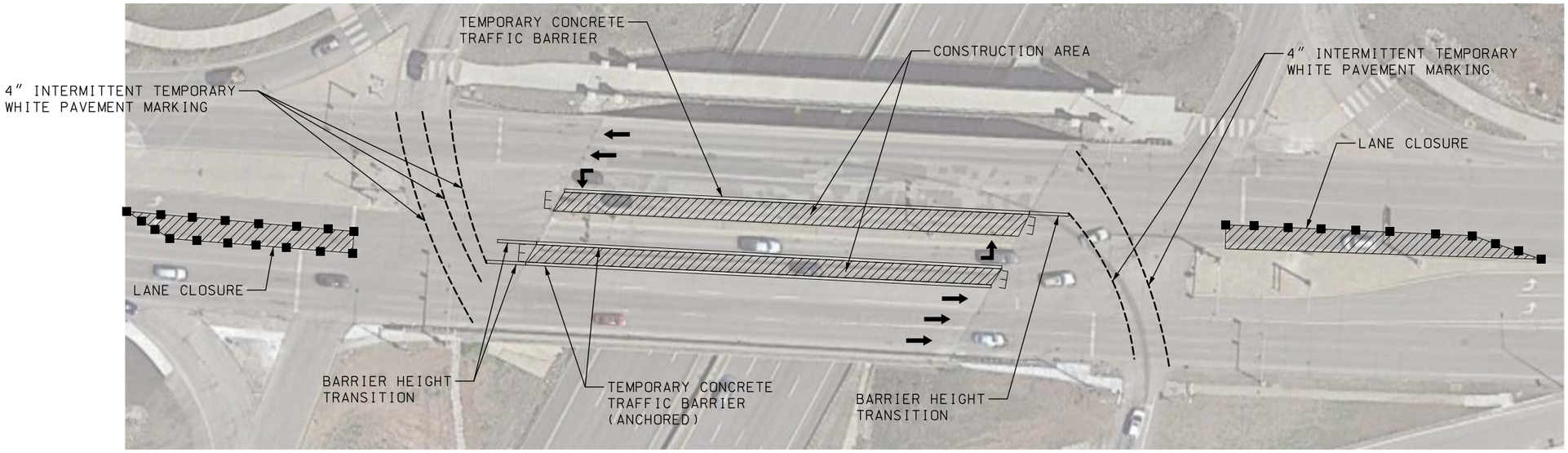


STAGE 1 CONSTRUCTION

NOTE:

SEE TRAFFIC CONTROL SHEETS 2 AND 4
FOR LANE CLOSURE DETAILS

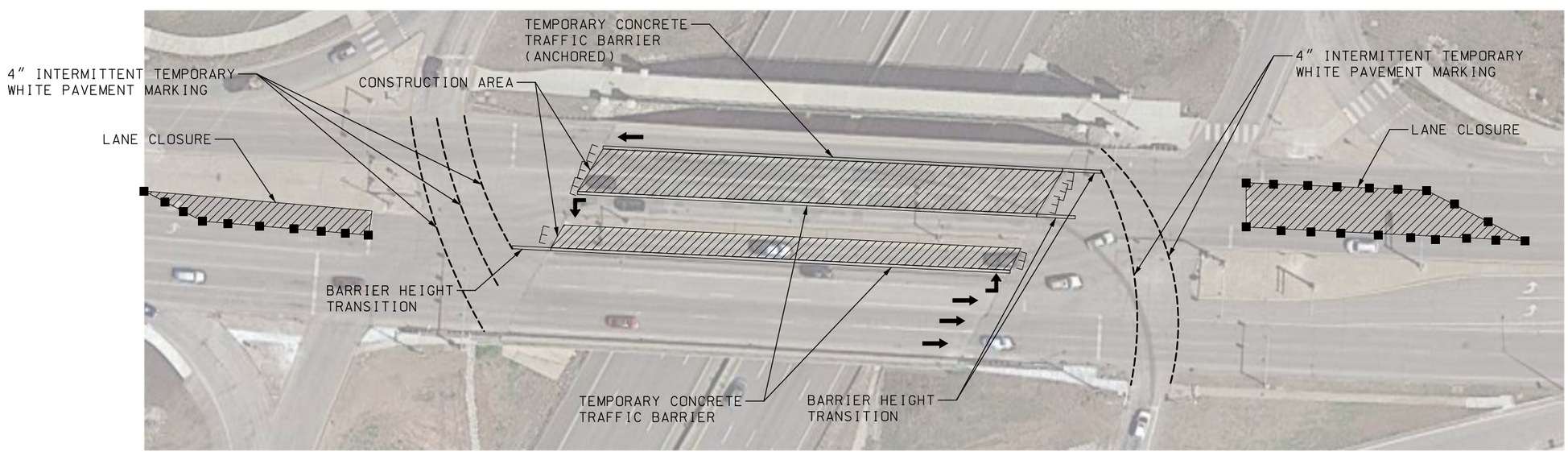


STAGE 2 CONSTRUCTION

NOT TO SCALE

TRAFFIC CONTROL SHEET
BANNISTER TRAFFIC STAGING
SHEET 9 OF 9

STATE OF MISSOURI
MARK C. FISHER
NUMBER PE-27971
PROFESSIONAL ENGINEER

THIS SHEET HAS BEEN SIGNED, SEALED AND DATED ELECTRONICALLY.

| DATE PREPARED | |
|---|---|
| 2/20/2020 | |
| ROUTE: VAR | STATE: MO |
| DISTRICT: KC | SHEET NO.: 13 |
| COUNTY: VARIOUS | |
| JOB NO.: J4P3266 | |
| CONTRACT ID. | |
| PROJECT NO. | |
| BRIDGE NO. | |

| DATE | DESCRIPTION |
|---|---|
| | |

MISSOURI HIGHWAYS AND TRANSPORTATION COMMISSION
105 WEST CAPITOL
JEFFERSON CITY, MO 65102
1-888-ASK-MODOT (1-888-275-6636)

IF A SEAL IS PRESENT ON THIS SHEET IT HAS BEEN ELECTRONICALLY SEALED AND DATED.

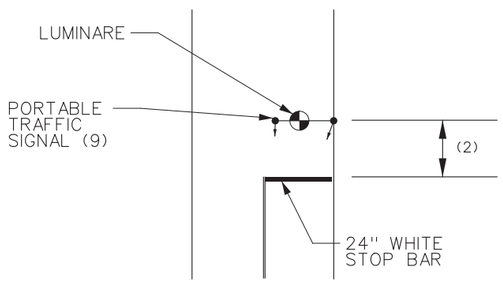


PORTABLE TRAFFIC SIGNAL DETAIL (1)

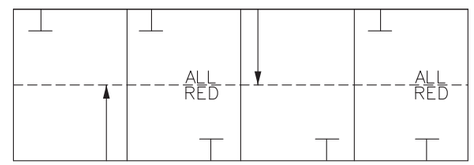


PHASE A PHASE B

PHASE A AND PHASE B SHALL ALWAYS BE FOLLOWED BY AN ALL RED PHASE OR INTERVAL.

SIGNALS SHALL REST IN ALL RED WHEN THERE ARE NO VEHICLE CALLS.

NOTES:

(1). SIGNING AND PAVEMENT MARKING INDENTICAL ON BOTH APPROACHES.

(2). 75' RECOMMENDED SPACING. SPACING MAY BE BETWEEN 40'-150'.

(3). NON-INSTRUSIVE DETECTION IS PREFERRED. HOWEVER, IF OTHER VEHICLE INTERFERENCE IS PRESENT (I.E. PARKING LOTS OR SIDE ROAD ACTIVITY), THEN OTHER DETECTION METHODS MAY BE USED.

(4). IF SIDE ROADS OR DRIVEWAYS OCCUR WITHIN THE LIMITS OF THE STOP BARS, ADDITIONAL INDICATIONS AND PHASING ARE REQUIRED. FUTHERMORE, RIGHT TURNS SHALL BE PROHIBITED FROM THESE ACCESS POINTS DURING THE RED INTERVAL.

(5). FLARE BARRIER TO EXTEND BEYOND CLEAR ZONE OR FLARE BARRIER TO EDGE LINE AND USE APPROVED END TREATMENT.

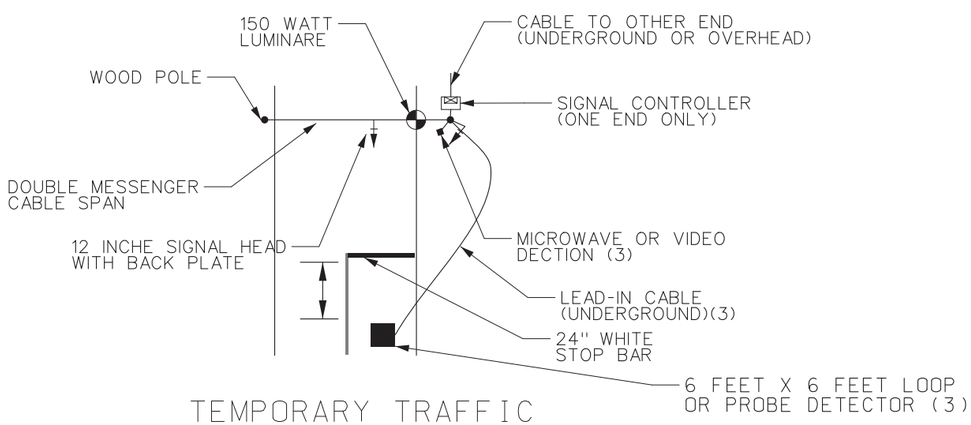


TEMPORARY TRAFFIC SIGNAL DETAIL (1)

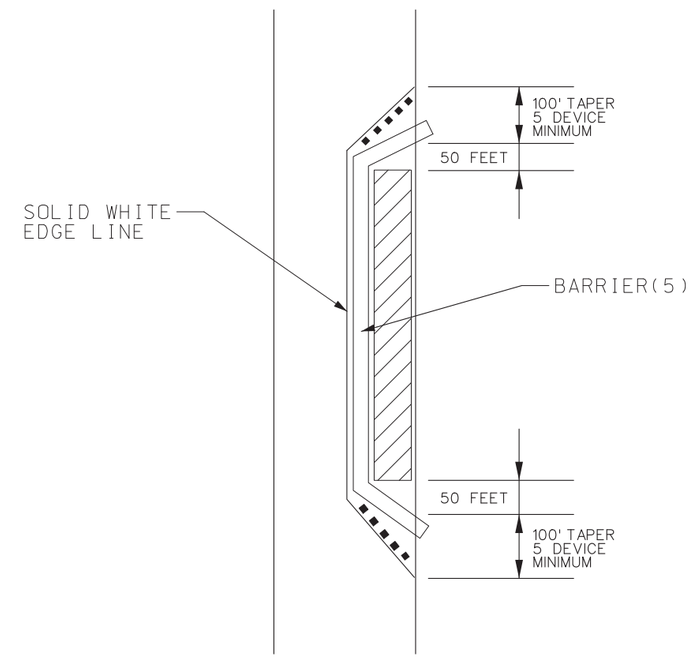


TEMPORARY TRAFFIC SIGNAL DETAIL WITH BARRIER(1)

2 SHEET ADDED 4/3/2020

TA-12A

FOR BRIDGE A47382
77TH STREET OVER US 71 ONLY

PORTABLE TRAFFIC SIGNALS
TEMPORARY TRAFFIC SIGNALS
TEMPORARY BARRIER DETAIL
TEMPORARY
TRAFFIC CONTROL
SHEET 10 OF 11

STATE OF MISSOURI
MARK C. FISHER
NUMBER PE-27971
PROFESSIONAL ENGINEER

THIS SHEET HAS BEEN SIGNED, SEALED AND DATED ELECTRONICALLY.

| DATE PREPARED | |
|---|---|
| 4/6/2020 | |
| ROUTE | STATE |
| VAR | MO |
| DISTRICT | SHEET NO. |
| KC | 13A |
| COUNTY | |
| VARIOUS | |
| JOB NO. | |
| J4P3266 | |
| CONTRACT ID. | |
| PROJECT NO. | |
| BRIDGE NO. | |

| DATE | DESCRIPTION |
|---|---|

MISSOURI HIGHWAYS AND TRANSPORTATION COMMISSION
105 WEST CAPITOL
JEFFERSON CITY, MO 65102
1-888-ASK-MODOT (1-888-275-6636)

IF A SEAL IS PRESENT ON THIS SHEET IT HAS BEEN ELECTRONICALLY SEALED AND DATED.

REV. 2

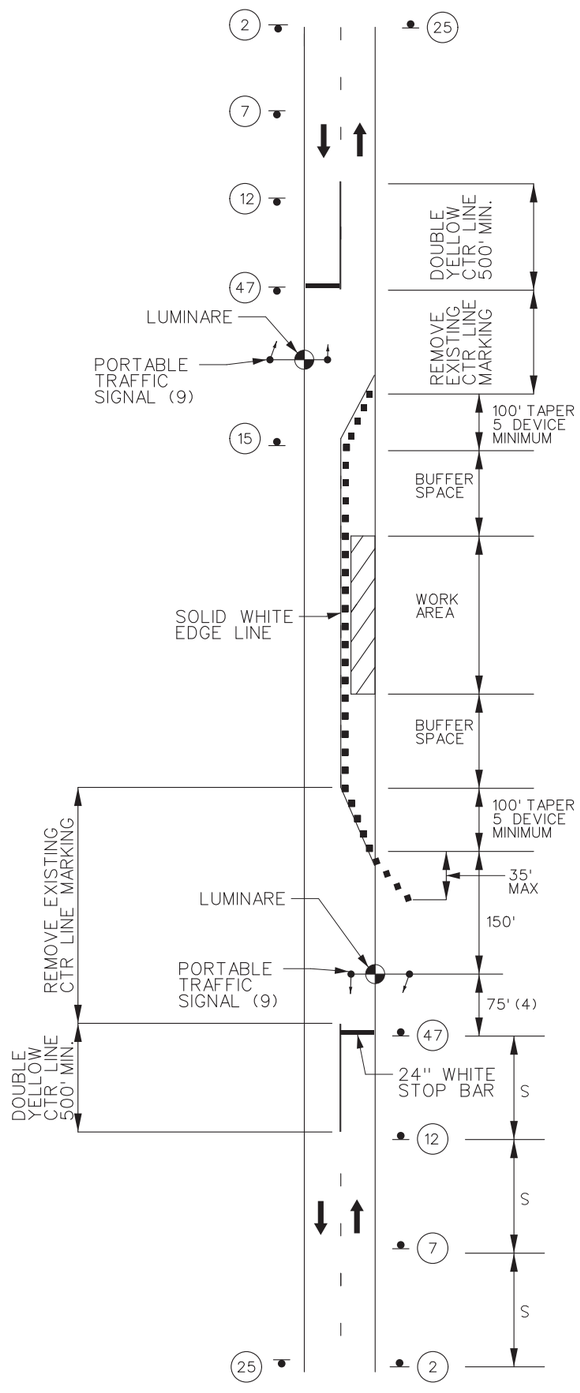


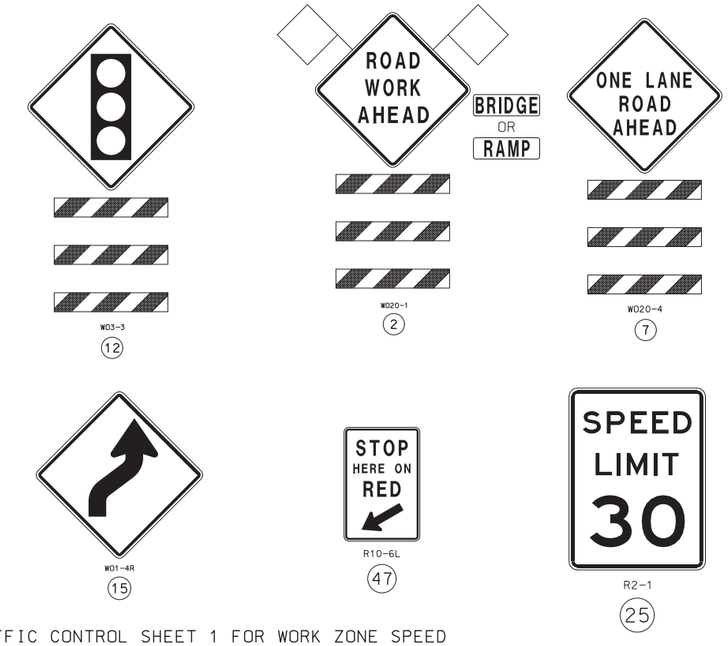


NOTES:

(1). SEE TRAFFIC CONTROL SHEET 1 FOR WORK ZONE SPEED LIMIT GUIDELINES.

(2). SEE TRAFFIC CONTROL SHEET 1 FOR SIGN SPACING, DEVICE SPACING AND CHANALIZING TAPER LENGTHS.

(3). SIGN 2 NOT REQUIRED IF SHOULDER WORK IS LOCATED WITHIN THE LIMITS OF AN ACTIVITY AREA WHERE ANOTHER SIGN 2 IS ALREADY USED.

(4). 75' RECOMMENDED SPACING. SPACING MAY BE BETWEEN 40'-150'.

(5). TEMPORARY TRAFFIC CONTROL SIGNALS SHALL MEET THE PHYSICAL DISPLAY AND OPERATIONAL REQUIREMENTS OF CONVENTIONAL TRAFFIC CONTROL SIGNALS.

(6). TEMPORARY TRAFFIC CONTROL SIGNAL TIMING SHALL BE ESTABLISHED BY AUTHORIZED OFFICIALS. DURATIONS OF RED CLEARANCE INTERVALS SHALL BE ADEQUATE TO CLEAR THE ONE LANE SECTION OF CONFLICTING VEHICLES.

(7). WHEN THE TEMPORARY TRAFFIC CONTROL SIGNALS IS CHANGED TO THE FLASHING MODE, EITHER MANUALLY OR AUTOMATICALLY, RED SIGNAL INDICATIONS SHALL BE FLASHED TO BOTH APPROACHES.

(8). STOP LINES SHALL BE INSTALLED WITH TEMPORARY TRAFFIC CONTROL SIGNALS FOR INTERMEDIATE AND LONG-TERM CLOSURES. EXISTING CONFLICTING PAVEMENT MARKINGS AND RAISED PAVEMENT MARKER REFLECTORS BETWEEN THE ACTIVITY AREA AND THE STOP LINE SHALL BE REMOVED. AFTER THE TEMPORARY TRAFFIC CONTROL SIGNAL IS REMOVED, THE STOP LINES AND OTHER TEMPORARY PAVEMENT MARKINGS SHALL BE REMOVED AND THE PERMANENT PAVEMENT MARKINGS RESTORED.

(9). WORK ZONE TRAFFIC CONTROL SIGNAL SYSTEM TO BE PAID FOR AS ONE LUMP SUM FOR ENTIRE SETUP

(10).SEE TA-12A, PORTABLE TRAFFIC CONTROL SIGNAL DETAILS.

2 SHEET ADDED 4/3/2020

TA-12

FOR BRIDGE A47382
77TH STREET OVER US 71 ONLY

LANE CLOSURE
ON A TWO-LANE ROAD
USING TRAFFIC CONTROL SIGNALS
TEMPORARY
TRAFFIC CONTROL
SHEET 11 OF 11

STATE OF MISSOURI
MARK C. FISHER
NUMBER PE-27971
PROFESSIONAL ENGINEER

THIS SHEET HAS BEEN SIGNED, SEALED AND DATED ELECTRONICALLY.

| DATE PREPARED | |
|---|---|
| 4/6/2020 | |
| ROUTE | STATE |
| VAR | MO |
| DISTRICT | SHEET NO. |
| KC | 13B |
| COUNTY | |
| VARIOUS | |
| JOB NO. | |
| J4P3266 | |
| CONTRACT ID. | |
| PROJECT NO. | |
| BRIDGE NO. | |

| DATE | DESCRIPTION |
|---|---|

MISSOURI HIGHWAYS AND TRANSPORTATION COMMISSION
105 WEST CAPITOL
JEFFERSON CITY, MO 65102
1-888-ASK-MODOT (1-888-275-6636)

IF A SEAL IS PRESENT ON THIS SHEET IT HAS BEEN ELECTRONICALLY SEALED AND DATED.

REV. 2

SEC/SUR 12 TWP 48N RGE 33W

# U.I.P. AND REHABILITATE EXISTING (48'-76'-48') CONTINUOUS CONCRETE BOX GIRDER SPANS

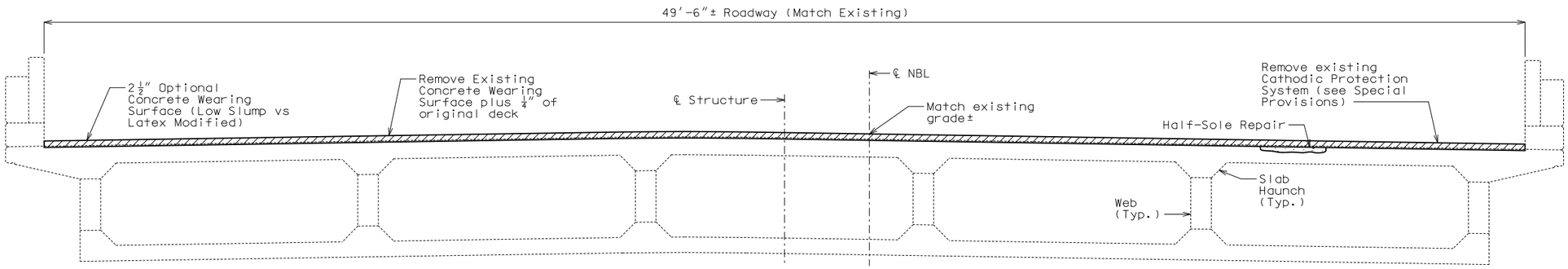


TYPICAL SECTION THRU EXISTING DECK

## General Notes:

**Design Specifications:**

2002 AASTHO LFD (17th Ed.) Standard Specifications
Bridge Deck Rating = 7

**Design Loading:**

HS20-44 (1961 & New Construction) and Military 24,000 lb Tandem Axle

**Design Unit Stresses:**

Class B-1 Concrete (Half-Sole Repair) f'c = 4,000 psi

**Miscellaneous:**

Roadway surfacing adjacent to bridge ends shall match new bridge wearing surface (roadway item).

All concrete repairs shall be in accordance with Sec 704, unless otherwise noted.

Outline of old work is indicated by light dashed lines. Heavy lines indicate new work.

Contractor shall verify all dimensions if field before ordering new material.

In order to maintain grade and a minimum thickness of wearing surface as shown on plans it may be necessary to use additional quantities of wearing surface at various locations throughout the structure. The cost of furnishing and installing the wearing surface will be considered completely covered in the contract unit price, including all additional labor, materials or equipment for variations in thickness of wearing surface.

**Traffic Handling:**

Maintain traffic on structure during construction. See Sheet No. 2 for staged construction details.

### Estimated Quantities

| Item | | Total |
|---|---|---|
| Removal of Concrete Wearing Surface | sq. foot | 8665 |
| Removal of Cathodic Protection System | lump sum | 1 |
| Optional Concrete Wearing Surface | sq. yard | 963 |
| Half-Sole Repair | sq. foot | 450 |
| | | |
| | | |
| | | |
| | | |

### Optional Concrete Wearing Surface

| Type of Concrete Wearing Surface | Type Used (✓) |
|---|---|
| Low Slump Concrete Wearing Surface | |
| Latex Modified Concrete Wearing Surface | |

MoDOT construction personnel will complete column labeled "Type Used (✓)".

The contractor shall select one of the alternate concrete wearing surfaces listed in the table. The alternate concrete wearing surface method of measurement and basis of payment shall be in accordance with Sec 505.

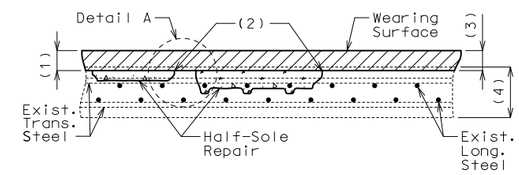


HALF-SOLE REPAIR

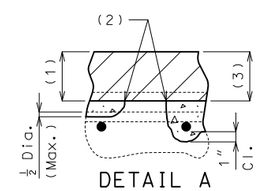


DETAIL A

Clearance around top bar and around bottom bar at the intersection of top bar shall be required when more than half the diameter of the top bar is exposed.

## DECK REPAIR

(1) Removal of existing 2 1/4"± concrete overlay and cathodic protection system plus 1/4" of existing deck

(2) 1" vertical side shall be established outside the deteriorated area.

(3) 2 1/2" Optional Concrete Wearing Surface (Low Slump vs Latex Modified)

(4) Original thickness of top slab minus previous scarification

REPAIRS TO BRIDGE: ROUTE I-435 NB OVER GREGORY BLVD.

ROUTE I-435 NB FROM I-49 TO ROUTE 350
ABOUT 4.3 MILES NORTH OF I-49
STA. 621+12.16± (Match Existing)

| |
|---|
| STD. 617.10 |
| STD. 617.20 |
| STD. 706.35 |

Detailed Jan. 2020
Checked Jan. 2020

Note: This drawing is not to scale. Follow dimensions.



STATE OF MISSOURI
TRAVIS S. STUMP
NUMBER PE-2010000870
PROFESSIONAL ENGINEER
THIS SHEET HAS BEEN SIGNED, SEALED AND DATED ELECTRONICALLY.

DATE PREPARED 3/3/2020
ROUTE I-435 STATE MO
DISTRICT BR SHEET NO. 1
COUNTY JACKSON
JOB NO. J4P3266
CONTRACT ID.
PROJECT NO.
BRIDGE NO. A14855

DESCRIPTION
DATE

IF A SEAL IS PRESENT ON THIS SHEET IT HAS BEEN ELECTRONICALLY SEALED AND DATED.

MISSOURI HIGHWAYS AND TRANSPORTATION COMMISSION
105 WEST CAPITOL
JEFFERSON CITY, MO 65102
1-888-ASK-MODOT (1-888-275-6636)

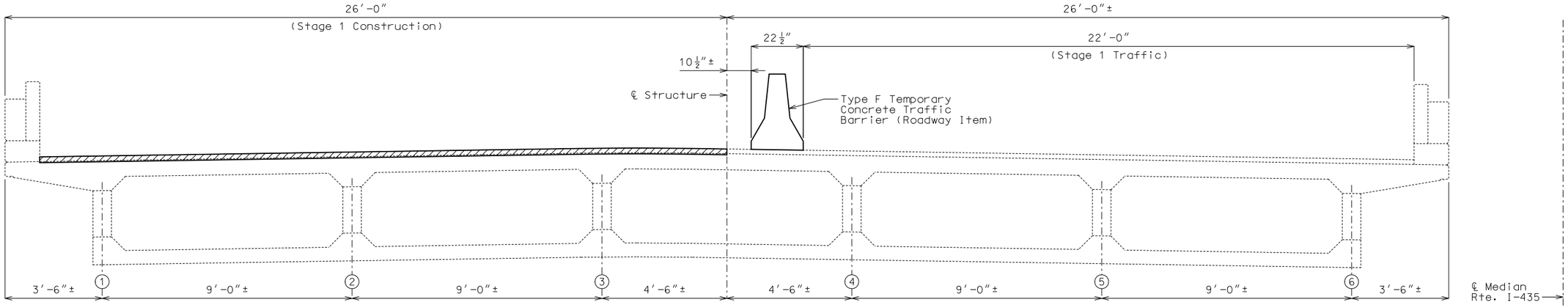


STAGE 1 CONSTRUCTION

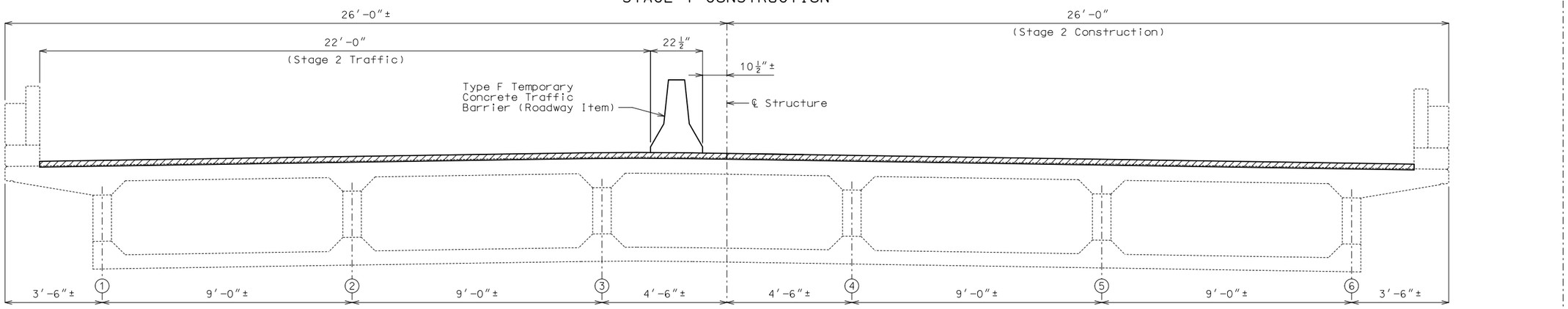


STAGE 2 CONSTRUCTION

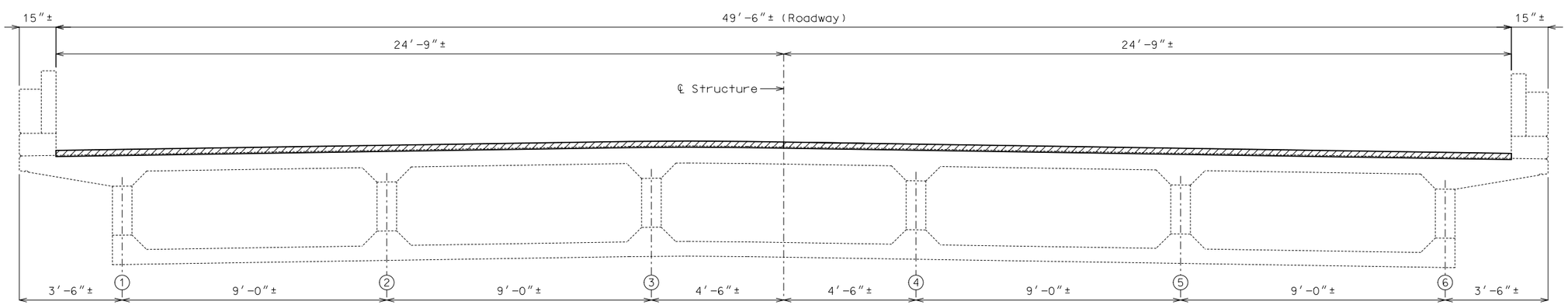


FINAL STAGE

Note:
Method of attachment for Type F Temporary Concrete Barrier shall be tie down strap.

# DETAILS SHOWING STAGED CONSTRUCTION

Detailed Jan. 2020
Checked Jan. 2020

Note: This drawing is not to scale. Follow dimensions.

Sheet No. 2 of 3

STATE OF MISSOURI
TRAVIS S. STUMP
NUMBER PE-2010000870
PROFESSIONAL ENGINEER

THIS SHEET HAS BEEN SIGNED, SEALED AND DATED ELECTRONICALLY.

| | |
|---|---|
| DATE PREPARED | 2/18/2020 |
| ROUTE | I-435 |
| STATE | MO |
| DISTRICT | BR |
| SHEET NO. | 2 |
| COUNTY | JACKSON |
| JOB NO. | J4P3266 |
| CONTRACT ID. | |
| PROJECT NO. | |
| BRIDGE NO. | A14855 |

| DATE | DESCRIPTION |
|---|---|
| | |

MISSOURI HIGHWAYS AND TRANSPORTATION COMMISSION
105 WEST CAPITOL
JEFFERSON CITY, MO 65102
1-888-ASK-MODOT (1-888-275-6636)

IF A SEAL IS PRESENT ON THIS SHEET IT HAS BEEN ELECTRONICALLY SEALED AND DATED.

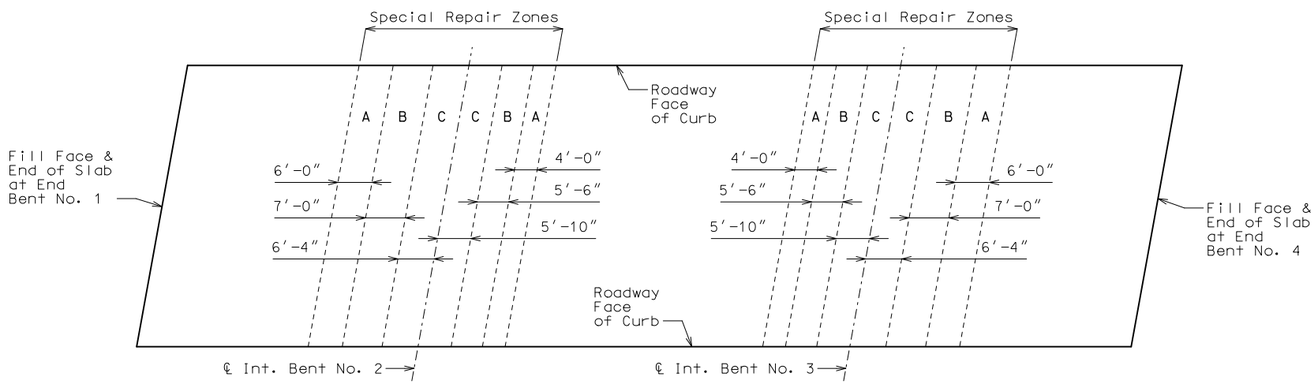


PLAN OF SLAB SHOWING SPECIAL REPAIR ZONES

## Deck Repair Notes:

**Order of Repair:**

1. Remove existing wearing surface and cathodic protection system plus 1/4" of existing deck.
2. Sound deck to identify areas in need of repair.
3. Outside special repair zones, complete the following repairs:
   a. Half-Sole Repair
4. Inside special repair zones, complete the following repairs:
   a. Half-Sole Repair
5. Place new wearing surface.

**Special Repair Zones:**

Any deck repair in areas not designated as a special repair zone shall be completed prior to work in Zone A.

Deck repair required in the areas designated as special repair zones shall be completed in alphabetical sequence beinning with Zone A. Zones with the same letter designation may be repaired at the same time.

Removal and deck repair shall be completed in one special repair zone and concrete shall have attained a compressive strength of 3200 psi before work can be started in the next special repair zone.

Total width of full depth repair shall not exceed 1/3 of the deck width at one time. For any area of deck repair that extends over a web and is more than 18 inches in length along the web, the concrete removal shall stop at the centerline of web and repair completed in this area. Prior to continuing work in this area, the concrete shall have attained a compressive strength of 3200 psi. No traffic shall be permitted over the web that is undergoing repair.

When the full depth repair extends over a diaphragm or web and the deteriorated concrete extends into the diaphragm or web, all deteriorated concrete shall be removed and replaced as full depth repair. Concrete in webs shall not be removed below the slab haunch of the girder without prior review and approval from the engineer.

Interior falsework installed by the contractor resting on the bottom slab shall be removed where entry access is available.

If any single repair area does not exceed 9 square feet in size and the total repair area within a special repair zone does not exceed 27 square feet, the special repair zone may repaired at the same time as an adjacent zone.

Half-sole repair in the special repair zone, on either side of the intermediate bents, shall be to a depth that will not expose half the diameter of the longitudinal reinforcing bar. Full depth repair shall be made when removal of deteriorated concrete exposes half or more of the diameter of the longitudinal reinforcing bar.

STATE OF MISSOURI
TRAVIS S. STUMP
NUMBER PE-2010000870
PROFESSIONAL ENGINEER
THIS SHEET HAS BEEN SIGNED, SEALED AND DATED ELECTRONICALLY.

| | |
|---|---|
| DATE PREPARED | 3/3/2020 |
| ROUTE | I-435 |
| STATE | MO |
| DISTRICT | BR |
| SHEET NO. | 3 |
| COUNTY | JACKSON |
| JOB NO. | J4P3266 |
| CONTRACT ID. | |
| PROJECT NO. | |
| BRIDGE NO. | A14855 |

DESCRIPTION | DATE

MISSOURI HIGHWAYS AND TRANSPORTATION COMMISSION
105 WEST CAPITOL
JEFFERSON CITY, MO 65102
1-888-ASK-MODOT (1-888-275-6636)

IF A SEAL IS PRESENT ON THIS SHEET IT HAS BEEN ELECTRONICALLY SEALED AND DATED.

Detailed Jan. 2020
Checked Jan. 2020

Note: This drawing is not to scale. Follow dimensions.

SEC/SUR 12 TWP 48N RGE 33W

# U.I.P. AND REHABILITATE EXISTING (48'-76'-48') CONTINUOUS CONCRETE BOX GIRDER SPANS

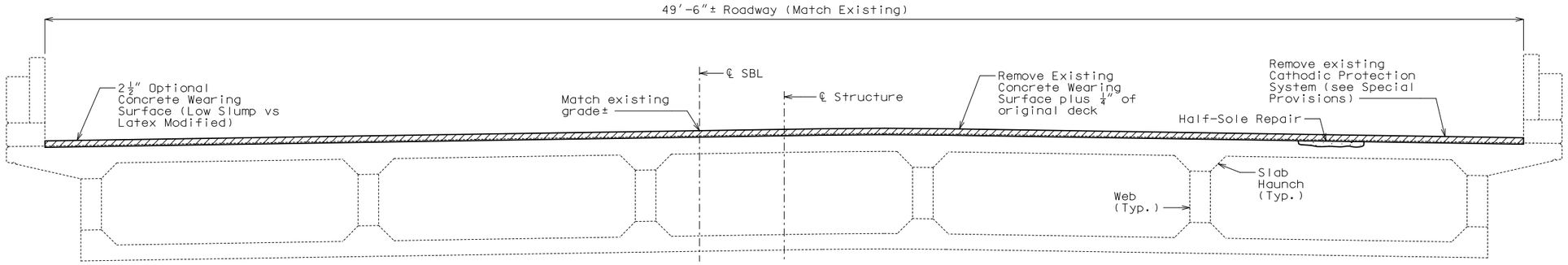


TYPICAL SECTION THRU EXISTING DECK

## General Notes:

**Design Specifications:**

2002 AASTHO LFD (17th Ed.) Standard Specifications
Bridge Deck Rating = 6

**Design Loading:**

HS20-44 (1961 & New Construction) and Military 24,000 lb Tandem Axle

**Design Unit Stresses:**

Class B-1 Concrete (Half-Sole Repair) f'c = 4,000 psi

**Miscellaneous:**

Roadway surfacing adjacent to bridge ends shall match new bridge wearing surface (roadway item).

All concrete repairs shall be in accordance with Sec 704, unless otherwise noted.

Outline of old work is indicated by light dashed lines. Heavy lines indicate new work.

Contractor shall verify all dimensions if field before ordering new material.

In order to maintain grade and a minimum thickness of wearing surface as shown on plans it may be necessary to use additional quantities of wearing surface at various locations throughout the structure. The cost of furnishing and installing the wearing surface will be considered completely covered in the contract unit price, including all additional labor, materials or equipment for variations in thickness of wearing surface.

**Traffic Handling:**

Maintain traffic on structure during construction. See Sheet No. 2 for staged construction details.

| Estimated Quantities | | |
|---|---|---|
| Item | | Total |
| Removal of Concrete Wearing Surface | sq. foot | 8665 |
| Removal of Cathodic Protection System | lump sum | 1 |
| Optional Concrete Wearing Surface | sq. yard | 963 |
| Half-Sole Repair | sq. foot | 450 |
| | | |
| | | |
| | | |
| | | |

| Optional Concrete Wearing Surface | |
|---|---|
| Type of Concrete Wearing Surface | Type Used (✓) |
| Low Slump Concrete Wearing Surface | |
| Latex Modified Concrete Wearing Surface | |

MoDOT construction personnel will complete column labeled "Type Used (✓)".

The contractor shall select one of the alternate concrete wearing surfaces listed in the table. The alternate concrete wearing surface method of measurement and basis of payment shall be in accordance with Sec 505.

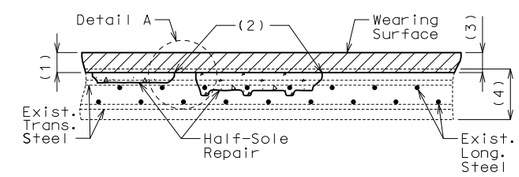


HALF-SOLE REPAIR

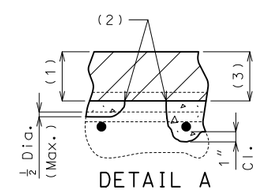


DETAIL A

Clearance around top bar and around bottom bar at the intersection of top bar shall be required when more than half the diameter of the top bar is exposed.

DECK REPAIR

(1) Removal of existing 2 1/4"± concrete overlay and cathodic protection system plus 1/4" of existing deck

(2) 1" vertical side shall be established outside the deteriorated area.

(3) 2 1/2" Optional Concrete Wearing Surface (Low Slump vs Latex Modified)

(4) Original thickness of top slab minus previous scarification

REPAIRS TO BRIDGE: ROUTE I-435 SB OVER GREGORY BLVD.

ROUTE I-435 SB FROM ROUTE 350 TO I-49
ABOUT 1.9 MILES SOUTH OF ROUTE 350
STA. 620+98.39± (Match Existing)

| |
|---|
| STD. 617.10 |
| STD. 617.20 |
| STD. 706.35 |

Detailed Jan. 2020
Checked Jan. 2020

Note: This drawing is not to scale. Follow dimensions.



STATE OF MISSOURI
TRAVIS S. STUMP
NUMBER PE-2010000870
PROFESSIONAL ENGINEER
THIS SHEET HAS BEEN SIGNED, SEALED AND DATED ELECTRONICALLY.

DATE PREPARED 3/3/2020

| ROUTE | STATE |
|---|---|
| I-435 | MO |
| DISTRICT | SHEET NO. |
| BR | 1 |

COUNTY JACKSON
JOB NO. J4P3266
CONTRACT ID.
PROJECT NO.
BRIDGE NO. A14856

| DATE | DESCRIPTION |
|---|---|

MISSOURI HIGHWAYS AND TRANSPORTATION COMMISSION
105 WEST CAPITOL
JEFFERSON CITY, MO 65102
1-888-ASK-MODOT (1-888-275-6636)

IF A SEAL IS PRESENT ON THIS SHEET IT HAS BEEN ELECTRONICALLY SEALED AND DATED.

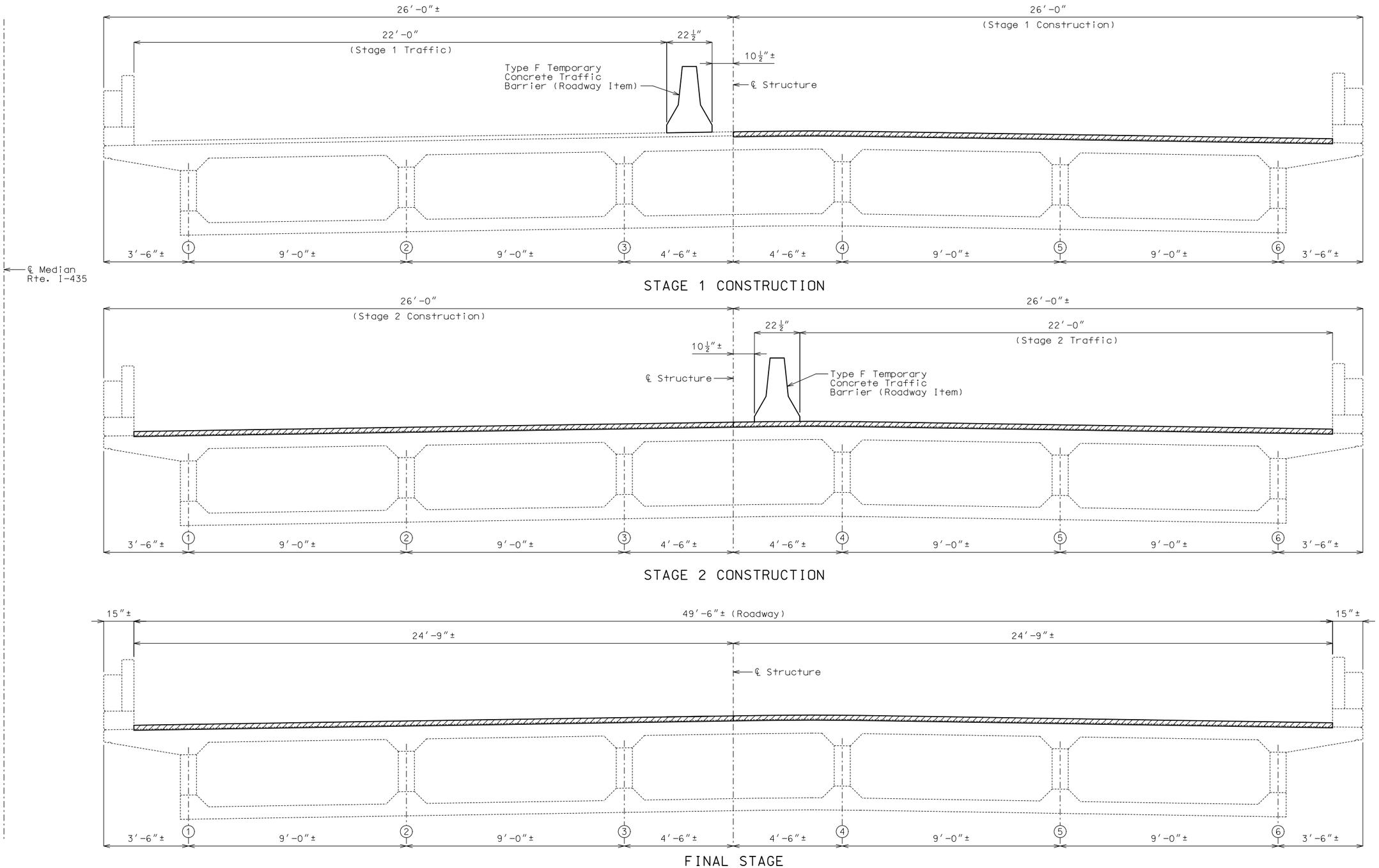


Note:
Method of attachment for Type F Temporary Concrete Barrier shall be tie down strap.

# DETAILS SHOWING STAGED CONSTRUCTION

Detailed Jan. 2020
Checked Jan. 2020

Note: This drawing is not to scale. Follow dimensions.



STATE OF MISSOURI
TRAVIS S. STUMP
NUMBER
PE-2010000870
PROFESSIONAL ENGINEER

THIS SHEET HAS BEEN SIGNED, SEALED AND DATED ELECTRONICALLY.

| | |
|---|---|
| DATE PREPARED | 2/18/2020 |
| ROUTE | I-435 |
| STATE | MO |
| DISTRICT | BR |
| SHEET NO. | 2 |
| COUNTY | JACKSON |
| JOB NO. | J4P3266 |
| CONTRACT ID. | |
| PROJECT NO. | |
| BRIDGE NO. | A14856 |

| DESCRIPTION | DATE |
|---|---|
| | |

MISSOURI HIGHWAYS AND TRANSPORTATION COMMISSION
105 WEST CAPITOL
JEFFERSON CITY, MO 65102
1-888-ASK-MODOT (1-888-275-6636)

IF A SEAL IS PRESENT ON THIS SHEET IT HAS BEEN ELECTRONICALLY SEALED AND DATED.

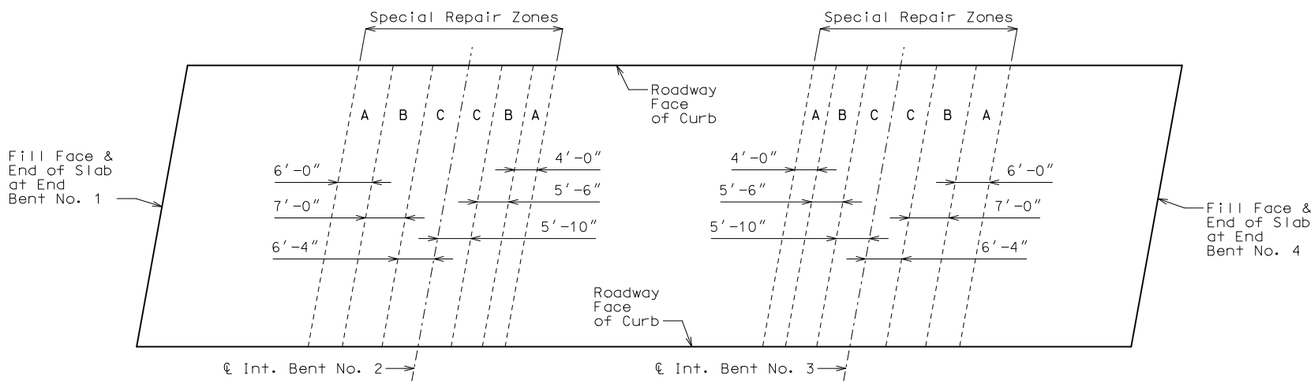


PLAN OF SLAB SHOWING SPECIAL REPAIR ZONES

## Deck Repair Notes:

**Order of Repair:**

1. Remove existing wearing surface and cathodic protection system plus 1/4" of existing deck.
2. Sound deck to identify areas in need of repair.
3. Outside special repair zones, complete the following repairs:
   a. Half-Sole Repair
4. Inside special repair zones, complete the following repairs:
   a. Half-Sole Repair
5. Place new wearing surface.

**Special Repair Zones:**

Any deck repair in areas not designated as a special repair zone shall be completed prior to work in Zone A.

Deck repair required in the areas designated as special repair zones shall be completed in alphabetical sequence beinning with Zone A. Zones with the same letter designation may be repaired at the same time.

Removal and deck repair shall be completed in one special repair zone and concrete shall have attained a compressive strength of 3200 psi before work can be started in the next special repair zone.

Total width of full depth repair shall not exceed 1/3 of the deck width at one time. For any area of deck repair that extends over a web and is more than 18 inches in length along the web, the concrete removal shall stop at the centerline of web and repair completed in this area. Prior to continuing work in this area, the concrete shall have attained a compressive strength of 3200 psi. No traffic shall be permitted over the web that is undergoing repair.

When the full depth repair extends over a diaphragm or web and the deteriorated concrete extends into the diaphragm or web, all deteriorated concrete shall be removed and replaced as full depth repair. Concrete in webs shall not be removed below the slab haunch of the girder without prior review and approval from the engineer.

Interior falsework installed by the contractor resting on the bottom slab shall be removed where entry access is available.

If any single repair area does not exceed 9 square feet in size and the total repair area within a special repair zone does not exceed 27 square feet, the special repair zone may be repaired at the same time as an adjacent zone.

STATE OF MISSOURI
TRAVIS S. STUMP
NUMBER PE-2010000870
PROFESSIONAL ENGINEER
THIS SHEET HAS BEEN SIGNED, SEALED AND DATED ELECTRONICALLY.

| | |
|---|---|
| DATE PREPARED | 3/3/2020 |
| ROUTE | I-435 |
| STATE | MO |
| DISTRICT | BR |
| SHEET NO. | 3 |
| COUNTY | JACKSON |
| JOB NO. | J4P3266 |
| CONTRACT ID. | |
| PROJECT NO. | |
| BRIDGE NO. | A14856 |

DESCRIPTION | DATE

MISSOURI HIGHWAYS AND TRANSPORTATION COMMISSION
105 WEST CAPITOL
JEFFERSON CITY, MO 65102
1-888-ASK-MODOT (1-888-275-6636)

IF A SEAL IS PRESENT ON THIS SHEET IT HAS BEEN ELECTRONICALLY SEALED AND DATED.

SEC/SUR 13 TWP 48N RGE 33W

# U.I.P. AND REHABILITATE EXISTING (38'-75'-49') CONTINUOUS CONCRETE BOX GIRDER SPANS

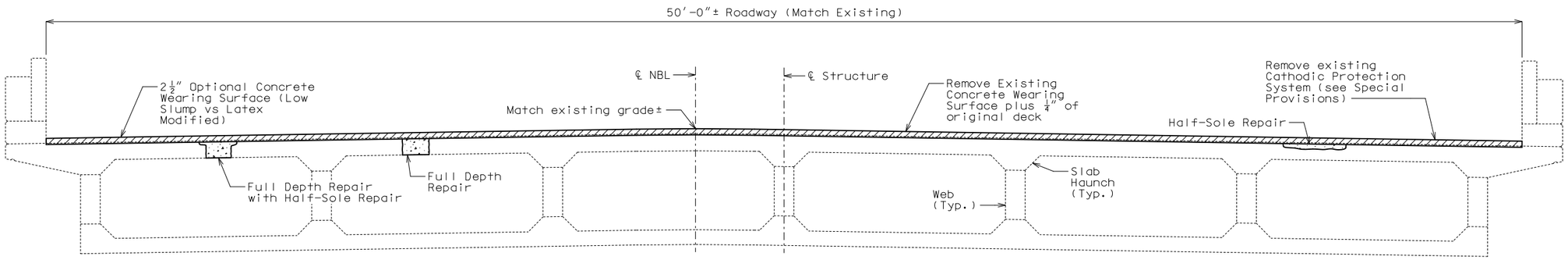


TYPICAL SECTION THRU EXISTING DECK

## General Notes:

**Design Specifications:**

2002 AASTHO LFD (17th Ed.) Standard Specifications
Bridge Deck Rating = 6

**Design Loading:**

HS20-44 (1961 & New Construction) and Military 24,000 lb Tandem Axle

**Design Unit Stresses:**

Class B-1 Concrete (Half-Sole and Full Depth Repair) f'c = 4,000 psi

**Miscellaneous:**

Roadway surfacing adjacent to bridge ends shall match new bridge wearing surface (roadway item).

All concrete repairs shall be in accordance with Sec 704, unless otherwise noted.

Outline of old work is indicated by light dashed lines. Heavy lines indicate new work.

Contractor shall verify all dimensions if field before ordering new material.

In order to maintain grade and a minimum thickness of wearing surface as shown on plans it may be necessary to use additional quantities of wearing surface at various locations throughout the structure. The cost of furnishing and installing the wearing surface will be considered completely covered in the contract unit price, including all additional labor, materials or equipment for variations in thickness of wearing surface.

**Traffic Handling:**

Maintain traffic on structure during construction. See Sheet No. 2 for staged construction details.

### Estimated Quantities

| Item | | Total |
|---|---|---|
| Removal of Concrete Wearing Surface | sq. foot | 8230 |
| Removal of Cathodic Protection System | lump sum | 1 |
| Optional Concrete Wearing Surface | sq. yard | 914 |
| Half-Sole Repair | sq. foot | 400 |
| Full Depth Repair | sq. foot | 100 |
| | | |
| | | |
| | | |
| | | |

### Optional Concrete Wearing Surface

| Type of Concrete Wearing Surface | Type Used (✓) |
|---|---|
| Low Slump Concrete Wearing Surface | |
| Latex Modified Concrete Wearing Surface | |

MoDOT construction personnel will complete column labeled "Type Used (✓)".

The contractor shall select one of the alternate concrete wearing surfaces listed in the table. The alternate concrete wearing surface method of measurement and basis of payment shall be in accordance with Sec 505.

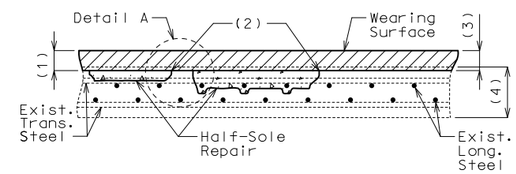


HALF-SOLE REPAIR

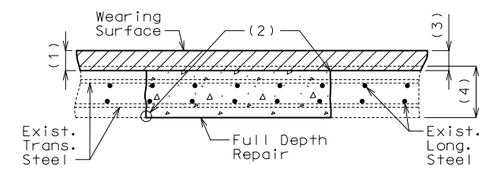


FULL DEPTH REPAIR

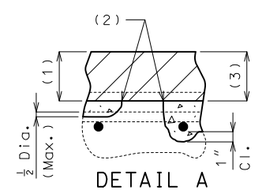


DETAIL A

Clearance around top bar and around bottom bar at the intersection of top bar shall be required when more than half the diameter of the top bar is exposed.

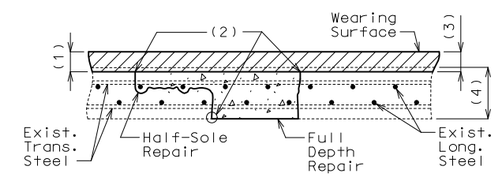


FULL DEPTH REPAIR WITH HALF-SOLE REPAIR

DECK REPAIR

(1) Removal of existing 2 1/4"± concrete overlay and cathodic protection system plus 1/4" of existing deck

(2) 1" vertical side shall be established outside the deteriorated area.

(3) 2 1/2" Optional Concrete Wearing Surface (Low Slump vs Latex Modified)

(4) Original thickness of top slab minus previous scarification

REPAIRS TO BRIDGE: ROUTE I-435 NB OVER OLDHAM ROAD

ROUTE I-435 NB FROM I-49 TO ROUTE 350
ABOUT 3.3 MILES NORTH OF I-49
STA. 671+83.24± (Match Existing)

| |
|---|
| STD. 617.10 |
| STD. 617.20 |
| STD. 706.35 |

Detailed Jan. 2020
Checked Jan. 2020

Note: This drawing is not to scale. Follow dimensions.



STATE OF MISSOURI
TRAVIS S. STUMP
NUMBER PE-2010000870
PROFESSIONAL ENGINEER
THIS SHEET HAS BEEN SIGNED, SEALED AND DATED ELECTRONICALLY.

DATE PREPARED 3/3/2020
ROUTE I-435 | STATE MO
DISTRICT BR | SHEET NO. 1
COUNTY JACKSON
JOB NO. J4P3266
CONTRACT ID.
PROJECT NO.
BRIDGE NO. A16405

DESCRIPTION | DATE

MISSOURI HIGHWAYS AND TRANSPORTATION COMMISSION
105 WEST CAPITOL
JEFFERSON CITY, MO 65102
1-888-ASK-MODOT (1-888-275-6636)

IF A SEAL IS PRESENT ON THIS SHEET IT HAS BEEN ELECTRONICALLY SEALED AND DATED.

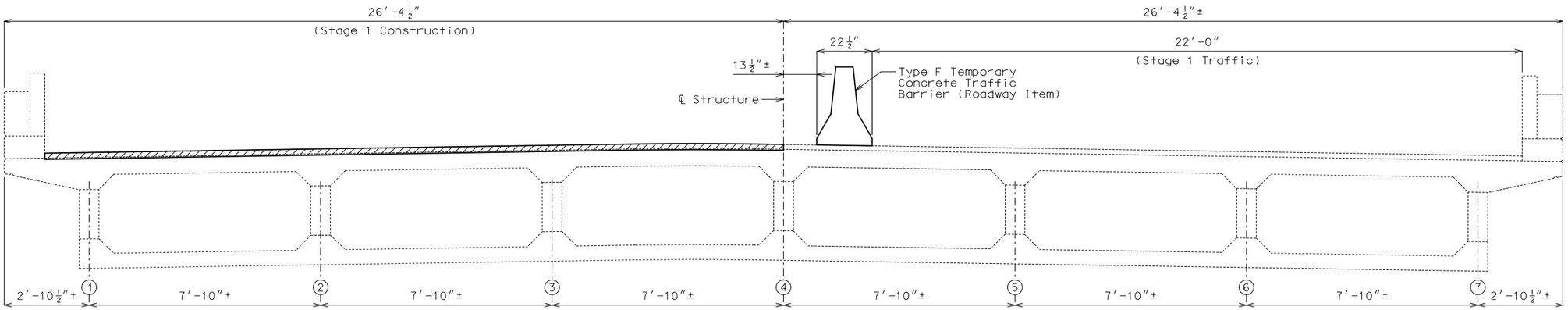


STAGE 1 CONSTRUCTION

℄ Median
Rte. I-435

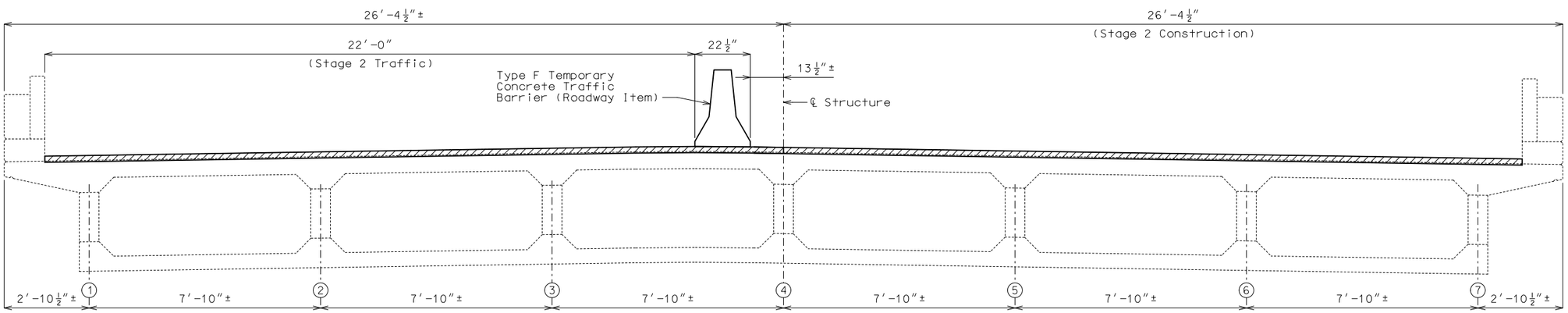


STAGE 2 CONSTRUCTION

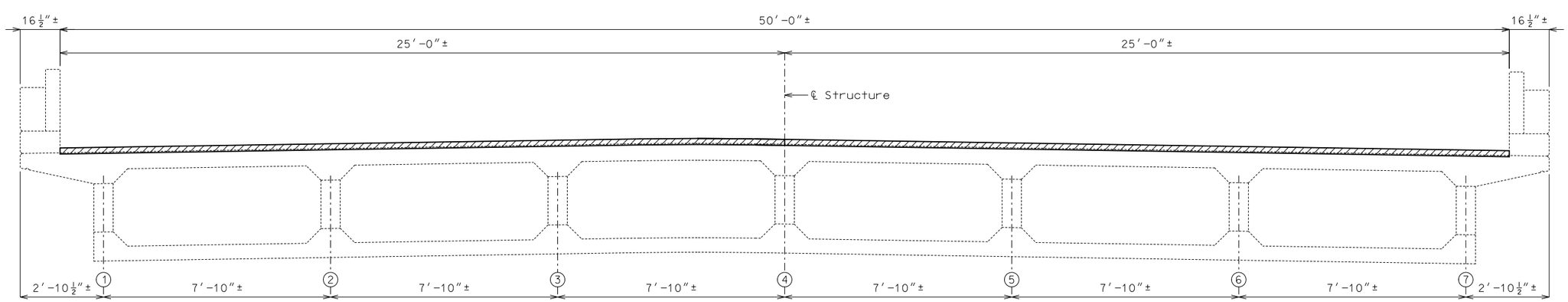


FINAL STAGE

# DETAILS SHOWING STAGED CONSTRUCTION

Note:
Method of attachment for Type F Temporary Concrete Barrier shall be tie down strap.

Detailed Jan. 2020
Checked Jan. 2020

Note: This drawing is not to scale. Follow dimensions.

Sheet No. 2 of 3

STATE OF MISSOURI
TRAVIS S. STUMP
NUMBER PE-2010000870
PROFESSIONAL ENGINEER

THIS SHEET HAS BEEN SIGNED, SEALED AND DATED ELECTRONICALLY.

| DATE PREPARED | |
|---|---|
| 2/18/2020 | |
| ROUTE | STATE |
| I-435 | MO |
| DISTRICT | SHEET NO. |
| BR | 2 |
| COUNTY | |
| JACKSON | |
| JOB NO. | |
| J4P3266 | |
| CONTRACT ID. | |
| PROJECT NO. | |
| BRIDGE NO. | |
| A16405 | |

| DATE | DESCRIPTION |
|---|---|
| | |

MISSOURI HIGHWAYS AND TRANSPORTATION COMMISSION

105 WEST CAPITOL
JEFFERSON CITY, MO 65102
1-888-ASK-MODOT (1-888-275-6636)

IF A SEAL IS PRESENT ON THIS SHEET IT HAS BEEN ELECTRONICALLY SEALED AND DATED.

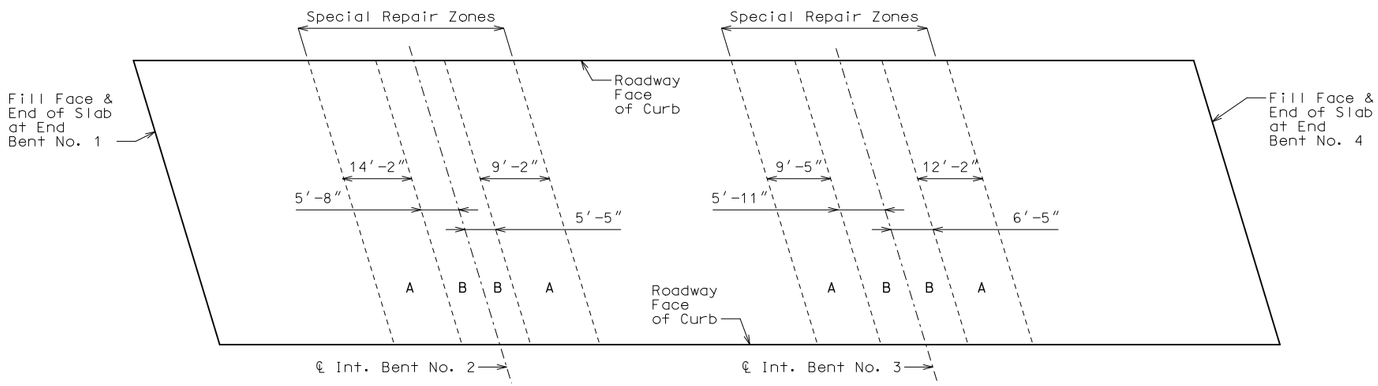


PLAN OF SLAB SHOWING SPECIAL REPAIR ZONES

## Deck Repair Notes:

**Order of Repair:**

1. Remove existing wearing surface and cathodic protection system plus 1/4″ of existing deck.
2. Sound deck to identify areas in need of repair.
3. Outside special repair zones, complete the following repairs:
   a. Half-Sole Repair
   b. Full depth repair
4. Inside special repair zones, complete the following repairs:
   a. Half-Sole Repair
   b. Full depth repair
5. Place new wearing surface.

**Special Repair Zones:**

Any deck repair in areas not designated as a special repair zone shall be completed prior to work in Zone A.

Deck repair required in the areas designated as special repair zones shall be completed in alphabetical sequence beinning with Zone A. Zones with the same letter designation may be repaired at the same time.

Removal and deck repair shall be completed in one special repair zone and concrete shall have attained a compressive strength of 3200 psi before work can be started in the next special repair zone.

Total width of full depth repair shall not exceed 1/3 of the deck width at one time. For any area of deck repair that extends over a web and is more than 18 inches in length along the web, the concrete removal shall stop at the centerline of web and repair completed in this area. Prior to continuing work in this area, the concrete shall have attained a compressive strength of 3200 psi. No traffic shall be permitted over the web that is undergoing repair.

When the full depth repair extends over a diaphragm or web and the deteriorated concrete extends into the diaphragm or web, all deteriorated concrete shall be removed and replaced as full depth repair. Concrete in webs shall not be removed below the slab haunch of the girder without prior review and approval from the engineer.

Interior falsework installed by the contractor resting on the bottom slab shall be removed where entry access is available.

If any single repair area does not exceed 9 square feet in size and the total repair area within a special repair zone does not exceed 27 square feet, the special repair zone may be repaired at the same time as an adjacent zone.

STATE OF MISSOURI
TRAVIS S. STUMP
NUMBER PE-2010000870
PROFESSIONAL ENGINEER
THIS SHEET HAS BEEN SIGNED, SEALED AND DATED ELECTRONICALLY.

| | |
|---|---|
| DATE PREPARED | 3/3/2020 |
| ROUTE | I-435 |
| STATE | MO |
| DISTRICT | BR |
| SHEET NO. | 3 |
| COUNTY | JACKSON |
| JOB NO. | J4P3266 |
| CONTRACT ID. | |
| PROJECT NO. | |
| BRIDGE NO. | A16405 |

| DATE | DESCRIPTION |
|---|---|

MISSOURI HIGHWAYS AND TRANSPORTATION COMMISSION
105 WEST CAPITOL
JEFFERSON CITY, MO 65102
1-888-ASK-MODOT (1-888-275-6636)

IF A SEAL IS PRESENT ON THIS SHEET IT HAS BEEN ELECTRONICALLY SEALED AND DATED.

SEC/SUR 13 TWP 48N RGE 33W

# U.I.P. AND REHABILITATE EXISTING (48′-75′-61′) CONTINUOUS CONCRETE BOX GIRDER SPANS

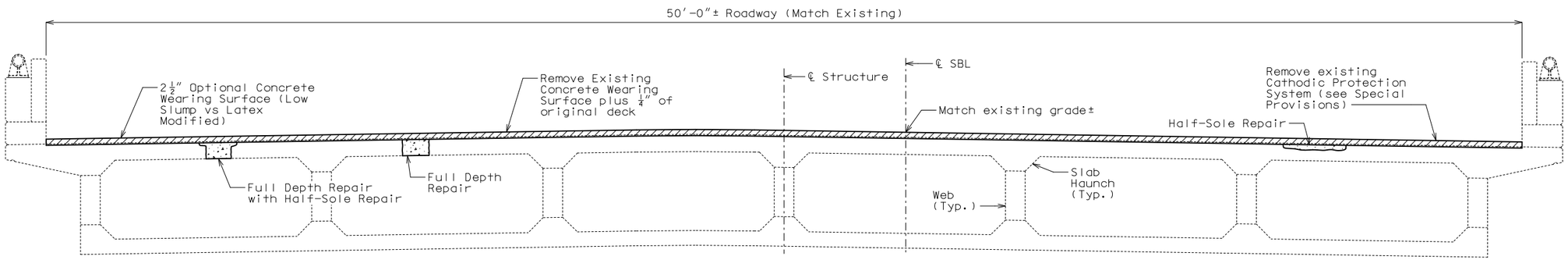


TYPICAL SECTION THRU EXISTING DECK

## General Notes:

**Design Specifications:**

2002 AASTHO LFD (17th Ed.) Standard Specifications
Bridge Deck Rating = 6

**Design Loading:**

HS20-44 (1961 & New Construction) and Military 24,000 lb Tandem Axle

**Design Unit Stresses:**

Class B-1 Concrete (Half-Sole and Full Depth Repair, Wing and Curb Blockout Replacement) f′c = 4,000 psi
Reinforcing Steel (Grade 60) fy = 60,000 psi

**Reinforcing Steel:**

Minimum clearance to reinforcing steel shall be 1 1/2″, unless otherwise shown.

**Joint Filler:**

All joint filler shall be in accordance with Sec 1057 for preformed sponge rubber expansion and partition joint filler, except as noted.

**Miscellaneous:**

Roadway surfacing adjacent to bridge ends shall match new bridge wearing surface (roadway item).

All concrete repairs shall be in accordance with Sec 704, unless otherwise noted.

Outline of old work is indicated by light dashed lines. Heavy lines indicate new work.

Contractor shall verify all dimensions if field before ordering new material.

In order to maintain grade and a minimum thickness of wearing surface as shown on plans it may be necessary to use additional quantities of wearing surface at various locations throughout the structure. The cost of furnishing and installing the wearing surface will be considered completely covered in the contract unit price, including all additional labor, materials or equipment for variations in thickness of wearing surface.

Bars bonded in old concrete not removed shall be cleanly stripped and embedded into new concrete where possible. If length is available, old bars shall extend into new concrete at least 40 diameters for plain bars and 30 diameters for deformed bars, unless otherwise noted.

**Traffic Handling:**

Maintain traffic on structure during construction. See Sheet No. 2 for staged construction details.

### Estimated Quantities

| Item | | Total |
|---|---|---|
| Removal of Concrete Wearing Surface | sq. foot | 9330 |
| Partial Removal of Substructure Concrete | lump sum | 1 |
| Curb Removal | linear foot | 10 |
| Removal of Cathodic Protection System | lump sum | 1 |
| Optional Concrete Wearing Surface | sq. yard | 1037 |
| Class B-1 Concrete | cu. yard | 4.2 |
| Curb Blockout | linear foot | 21 |
| Half-Sole Repair | sq. foot | 450 |
| Full Depth Repair | sq. foot | 100 |
| Reinforcing Steel (Epoxy Coated) | pound | 790 |
| | | |
| | | |
| | | |
| | | |
| | | |

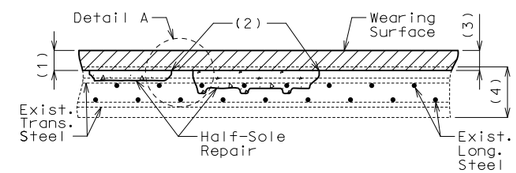


HALF-SOLE REPAIR

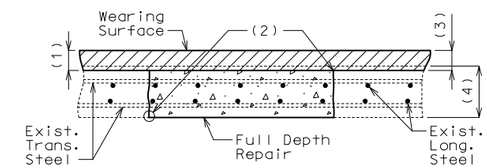


FULL DEPTH REPAIR

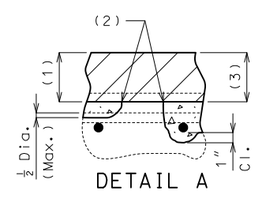


DETAIL A

Clearance around top bar and around bottom bar at the intersection of top bar shall be required when more than half the diameter of the top bar is exposed.

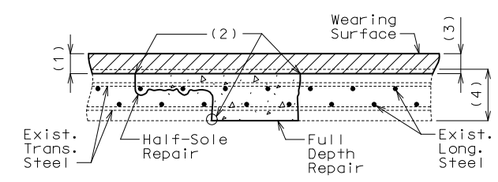


FULL DEPTH REPAIR WITH HALF-SOLE REPAIR

DECK REPAIR

(1) Removal of existing 2 1/4″± concrete overlay and cathodic protection system plus 1/4″ of existing deck

(2) 1″ vertical side shall be established outside the deteriorated area.

(3) 2 1/2″ Optional Concrete Wearing Surface (Low Slump vs Latex Modified)

(4) Original thickness of top slab minus previous scarification

### Optional Concrete Wearing Surface

| Type of Concrete Wearing Surface | Type Used (✓) |
|---|---|
| Low Slump Concrete Wearing Surface | |
| Latex Modified Concrete Wearing Surface | |

MoDOT construction personnel will complete column labeled "Type Used (✓)".

The contractor shall select one of the alternate concrete wearing surfaces listed in the table. The alternate concrete wearing surface method of measurement and basis of payment shall be in accordance with Sec 505.

REPAIRS TO BRIDGE: ROUTE I-435 SB OVER OLDHAM ROAD

ROUTE I-435 SB FROM ROUTE 350 TO I-49
ABOUT 2.9 MILES SOUTH OF ROUTE 350
STA. 671+98.12± (Match Existing)

STD. 617.10
STD. 617.20
STD. 706.35

Detailed Jan. 2020
Checked Jan. 2020

Note: This drawing is not to scale. Follow dimensions.



STATE OF MISSOURI
TRAVIS S. STUMP
NUMBER PE-2010000870
PROFESSIONAL ENGINEER
THIS SHEET HAS BEEN SIGNED, SEALED AND DATED ELECTRONICALLY.

DATE PREPARED 3/3/2020
ROUTE I-435 STATE MO
DISTRICT BR SHEET NO. 1
COUNTY JACKSON
JOB NO. J4P3266
CONTRACT ID.
PROJECT NO.
BRIDGE NO. A16406

| DATE | DESCRIPTION |
|---|---|

IF A SEAL IS PRESENT ON THIS SHEET IT HAS BEEN ELECTRONICALLY SEALED AND DATED.

MISSOURI HIGHWAYS AND TRANSPORTATION COMMISSION
105 WEST CAPITOL
JEFFERSON CITY, MO 65102
1-888-ASK-MODOT (1-888-275-6636)

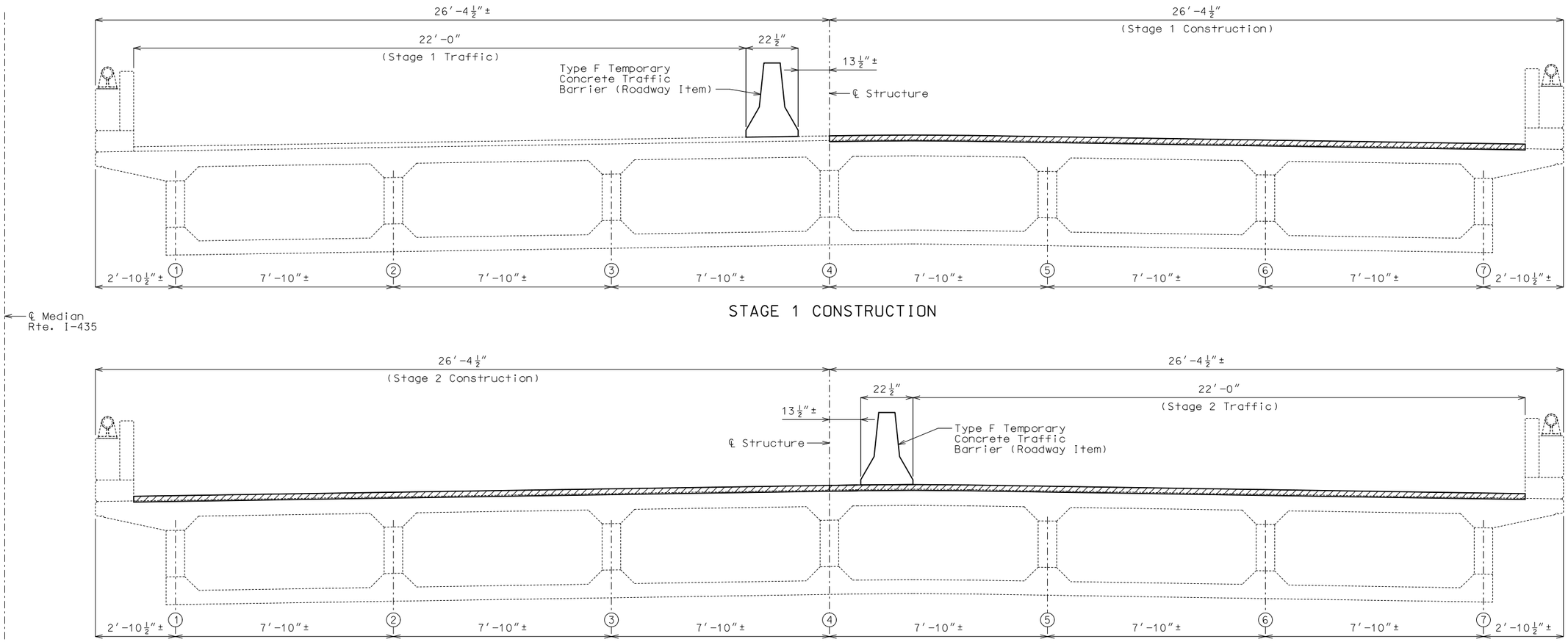


STAGE 1 CONSTRUCTION

STAGE 2 CONSTRUCTION

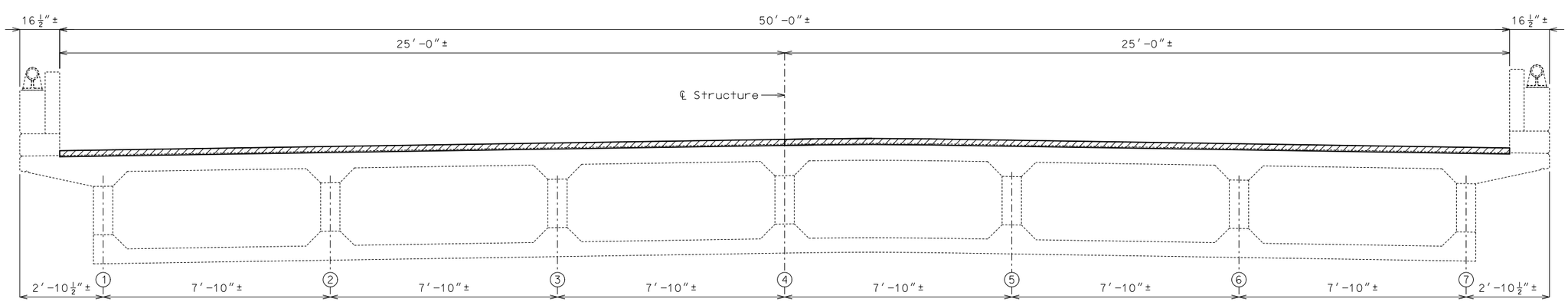


FINAL STAGE

# DETAILS SHOWING STAGED CONSTRUCTION

Note:
Method of attachment for Type F Temporary Concrete Barrier shall be tie down strap.

Detailed Jan. 2020
Checked Jan. 2020

Note: This drawing is not to scale. Follow dimensions.



STATE OF MISSOURI
TRAVIS S. STUMP
NUMBER
PE-2010000870
PROFESSIONAL ENGINEER

THIS SHEET HAS BEEN SIGNED, SEALED AND DATED ELECTRONICALLY.

| | |
|---|---|
| DATE PREPARED | 2/18/2020 |
| ROUTE | I-435 |
| STATE | MO |
| DISTRICT | BR |
| SHEET NO. | 2 |
| COUNTY | JACKSON |
| JOB NO. | J4P3266 |
| CONTRACT ID. | |
| PROJECT NO. | |
| BRIDGE NO. | A16406 |

| DATE | DESCRIPTION |
|---|---|

MISSOURI HIGHWAYS AND TRANSPORTATION COMMISSION
105 WEST CAPITOL
JEFFERSON CITY, MO 65102
1-888-ASK-MODOT (1-888-275-6636)

IF A SEAL IS PRESENT ON THIS SHEET IT HAS BEEN ELECTRONICALLY SEALED AND DATED.

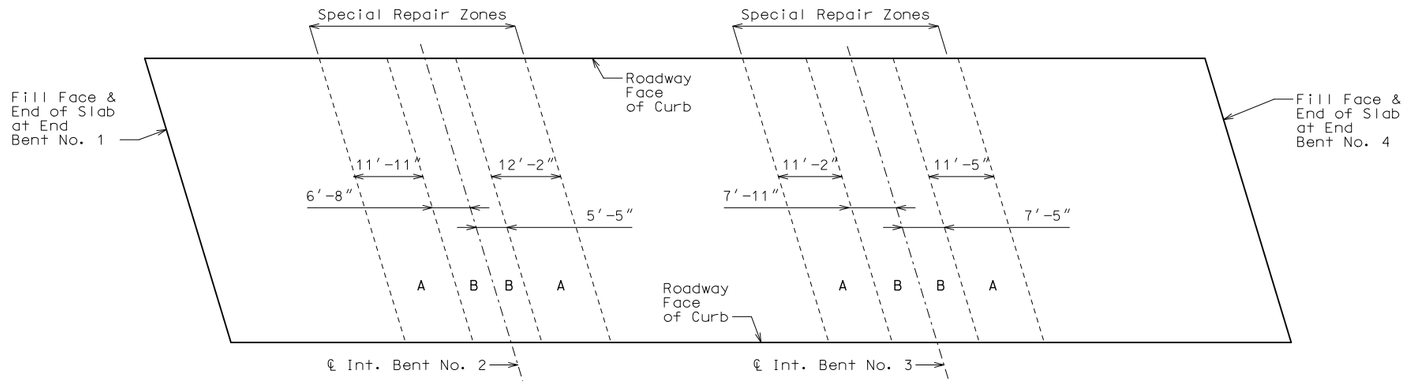


PLAN OF SLAB SHOWING SPECIAL REPAIR ZONES

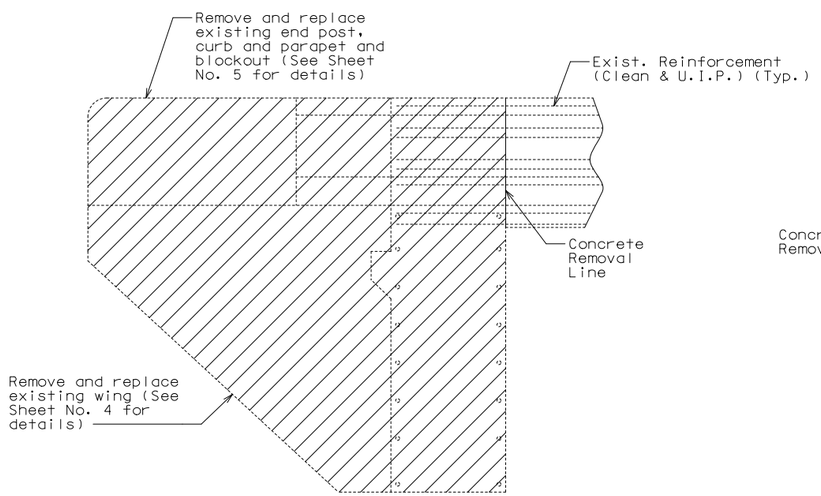


PART ELEVATION SHOWING CONCRETE REMOVAL AT END BENT NO. 1 RIGHT WING

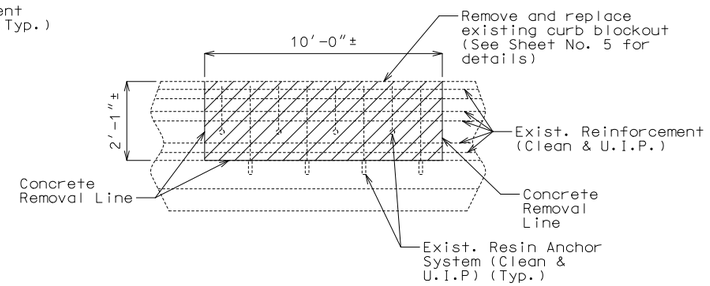


PART ELEVATION OF RIGHT CURB BLOCKOUT IN SPAN (3-4) SHOWING CONCRETE REMOVAL

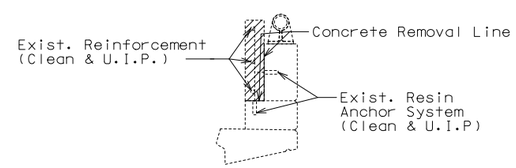


PART SECTION THRU RIGHT CURB BLOCKOUT IN SPAN (3-4) SHOWING CONCRETE REMOVAL

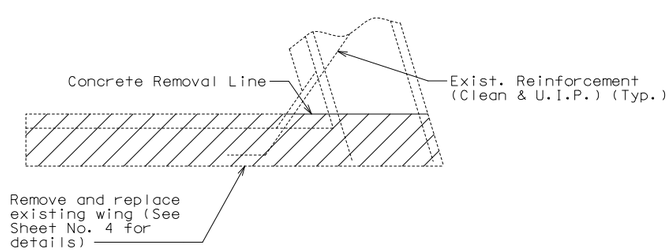


PART PLAN SHOWING CONCRETE REMOVAL AT END BENT NO. 1 RIGHT WING

Notes:

Removal of existing wing, end post, curb blockout and curb and parapet at End Bent No. 1 shall be covered by the contract lump sum price for Partial Removal of Substructure Concrete.

Removal of curb blockout in Span (3-4) shall be covered by the contract unit price for Curb Removal.

Cost of any required excavation and temporary shoring will be considered completely covered by the contract lump sum price for Partial Removal of Substructure Concrete.

Existing reinforcement embedded in the substructure beam and diaphragm, bridge slab or the curbs shall be cleaned and reused where possible.

Tube rail on parapet where parapet is removed shall not be reinstalled. Tube rail and posts required to be removed shall become property of the contractor and properly disposed. See note on Sheet No. 5 for additional information.

## Deck Repair Notes:

**Order of Repair:**

1. Remove existing wearing surface and cathodic protection system plus 1/4″ of existing deck.
2. Sound deck to identify areas in need of repair.
3. Outside special repair zones, complete the following repairs:
   a. Half-Sole Repair
   b. Full depth repair
4. Inside special repair zones, complete the following repairs:
   a. Half-Sole Repair
   b. Full depth repair
5. Place new wearing surface.

**Special Repair Zones:**

Any deck repair in areas not designated as a special repair zone shall be completed prior to work in Zone A.

Deck repair required in the areas designated as special repair zones shall be completed in alphabetical sequence beinning with Zone A. Zones with the same letter designation may be repaired at the same time.

Removal and deck repair shall be completed in one special repair zone and concrete shall have attained a compressive strength of 3200 psi before work can be started in the next special repair zone.

Total width of full depth repair shall not exceed 1/3 of the deck width at one time. For any area of deck repair that extends over a web and is more than 18 inches in length along the web, the concrete removal shall stop at the centerline of web and repair completed in this area. Prior to continuing work in this area, the concrete shall have attained a compressive strength of 3200 psi. No traffic shall be permitted over the web that is undergoing repair.

When the full depth repair extends over a diaphragm or web and the deteriorated concrete extends into the diaphragm or web, all deteriorated concrete shall be removed and replaced as full depth repair. Concrete in webs shall not be removed below the slab haunch of the girder without prior review and approval from the engineer.

Interior falsework installed by the contractor resting on the bottom slab shall be removed where entry access is available.

If any single repair area does not exceed 9 square feet in size and the total repair area within a special repair zone does not exceed 27 square feet, the special repair zone may be repaired at the same time as an adjacent zone.

STATE OF MISSOURI
TRAVIS S. STUMP
NUMBER PE-2010000870
PROFESSIONAL ENGINEER
THIS SHEET HAS BEEN SIGNED, SEALED AND DATED ELECTRONICALLY.

| DATE PREPARED | |
|---|---|
| 3/3/2020 | |
| ROUTE I-435 | STATE MO |
| DISTRICT BR | SHEET NO. 3 |
| COUNTY JACKSON | |
| JOB NO. J4P3266 | |
| CONTRACT ID. | |
| PROJECT NO. | |
| BRIDGE NO. A16406 | |

| DATE | DESCRIPTION |
|---|---|
| | |

MISSOURI HIGHWAYS AND TRANSPORTATION COMMISSION
105 WEST CAPITOL
JEFFERSON CITY, MO 65102
1-888-ASK-MODOT (1-888-275-6636)

IF A SEAL IS PRESENT ON THIS SHEET IT HAS BEEN ELECTRONICALLY SEALED AND DATED.

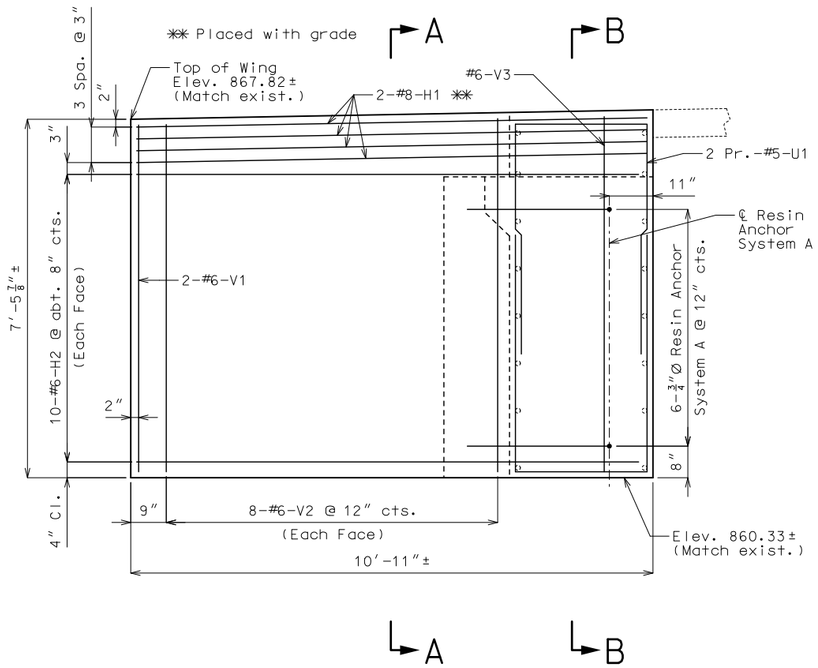


ELEVATION OF RIGHT WING

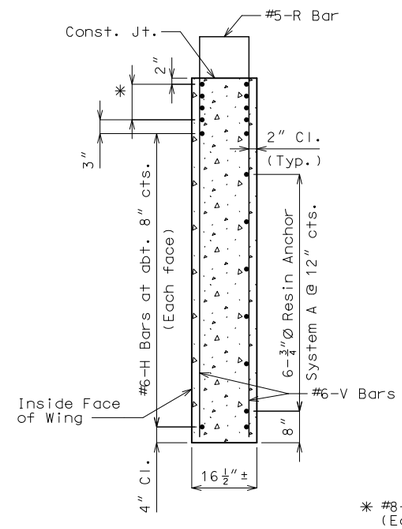


SECTION A-A

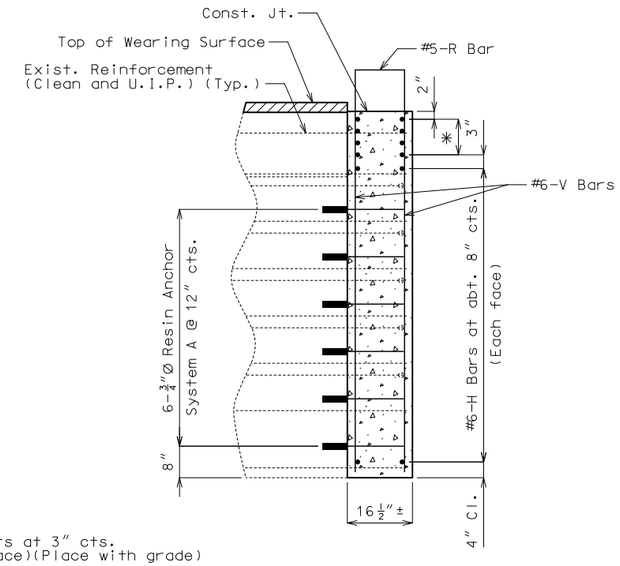


* #8-H Bars at 3" cts.
(Each face)(Place with grade)

SECTION B-B

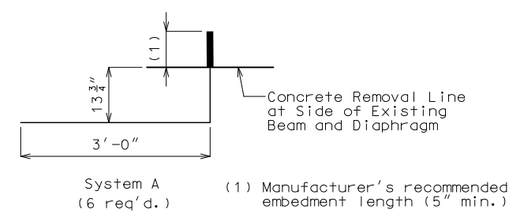


DETAILS OF RESIN ANCHOR SYSTEMS

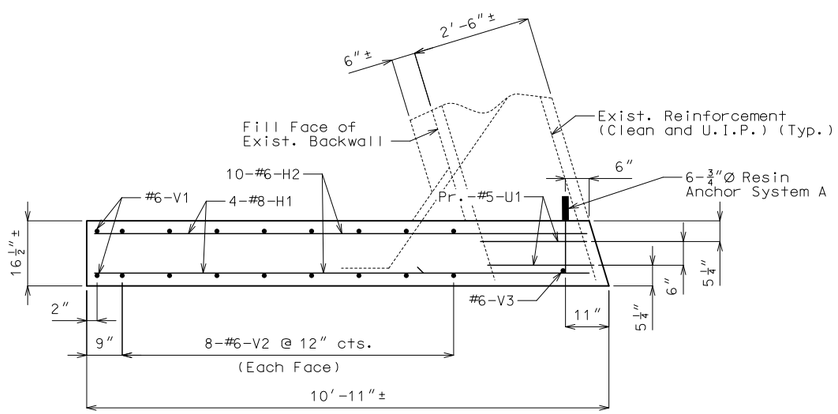


PART PLAN OF RIGHT WING

Notes:

The contractor shall use one of the qualified resin anchor systems in accordance with Sec 1039.

Cost of furnishing and installing the resin anchor systems, complete in place, will be considered completely covered by the contract unit price for Class B-1 Concrete.

The minimum embedment depth in concrete with f'c = 4,000 psi for the resin anchor systems shall be that required to meet the minimum ultimate pullout strength in accordance with Sec 1039 but shall not be less than 5".

An epoxy coated #6 Grade 60 reinforcing bar shall be substituted for the 3/4"Ø threaded rod.

Concrete shall be Class B-1 with f'c = 4,000 psi.

Concrete and any other work incidental to constructing the new wing, complete in place, shall be covered by the contract unit price for Class B-1 Concrete.

All reinforcing steel shall be epoxy coated.

Reinforcing steel will be covered by the contract unit price for Reinforcing Steel (Epoxy Coated).

For details of concrete removal, see Sheet No. 3.

For details of Curb Blockout Replacement, see Sheet No. 5.

# DETAILS OF RIGHT WING REPLACEMENT AT END BENT NO. 1

Detailed Jan. 2020
Checked Jan. 2020

Note: This drawing is not to scale. Follow dimensions.



STATE OF MISSOURI
TRAVIS S. STUMP
NUMBER PE-2010000870
PROFESSIONAL ENGINEER
THIS SHEET HAS BEEN SIGNED, SEALED AND DATED ELECTRONICALLY.

DATE PREPARED 2/18/2020
ROUTE I-435 | STATE MO
DISTRICT BR | SHEET NO. 4
COUNTY JACKSON
JOB NO. J4P3266
CONTRACT ID.
PROJECT NO.
BRIDGE NO. A16406

DESCRIPTION | DATE

MISSOURI HIGHWAYS AND TRANSPORTATION COMMISSION
105 WEST CAPITOL
JEFFERSON CITY, MO 65102
1-888-ASK-MODOT (1-888-275-6636)

IF A SEAL IS PRESENT ON THIS SHEET IT HAS BEEN ELECTRONICALLY SEALED AND DATED.

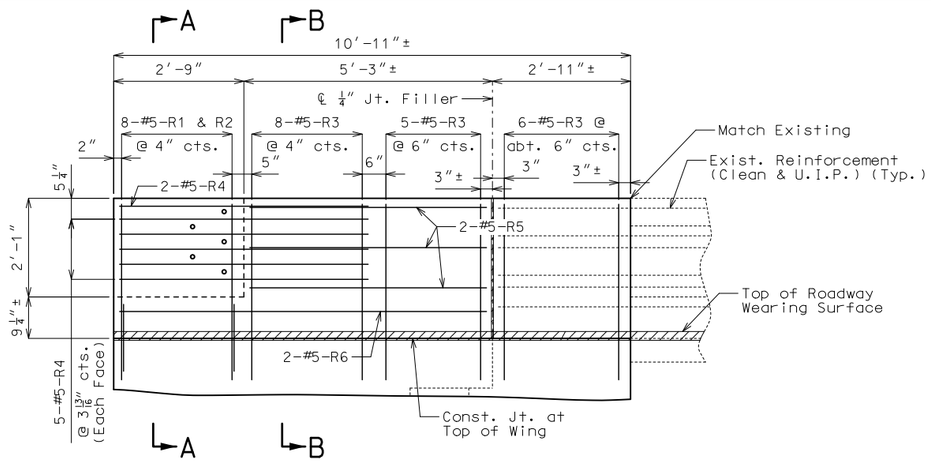


ELEVATION SHOWING RIGHT CURB BLOCKOUT REPLACEMENT AT END BENT NO. 1

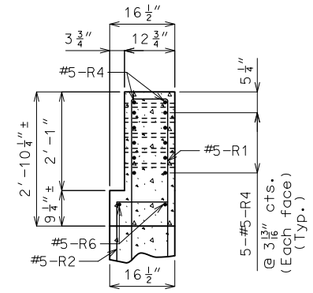


SECTION A-A

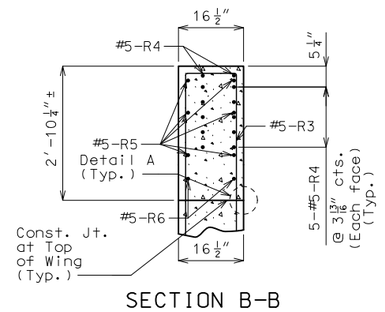


SECTION B-B

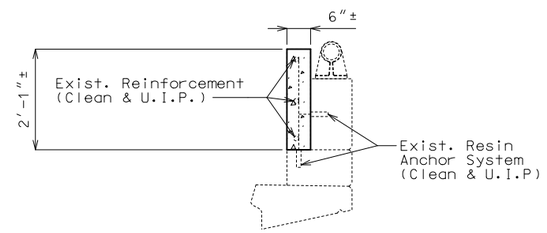


PART SECTION THRU RIGHT CURB BLOCKOUT IN SPAN (3-4) SHOWING CURB BLOCKOUT REPLACEMENT

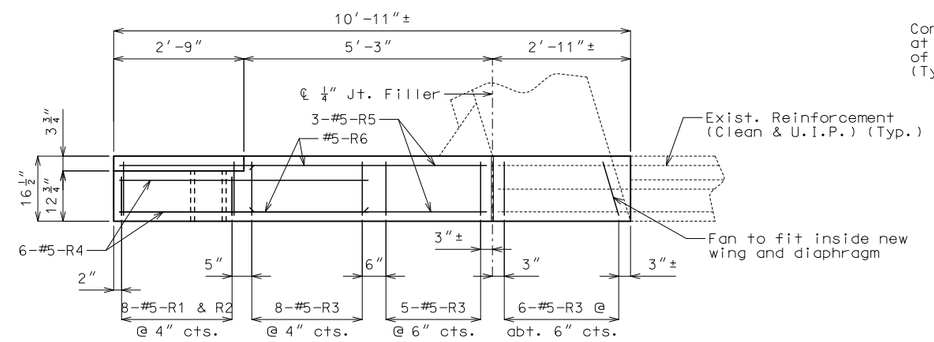


PLAN SHOWING RIGHT CURB BLOCKOUT REPLACEMENT AT END BENT NO. 1

Note: Cut off existing bridge rail 3 inches from end of new curb blockout and cap the end of rail to be left in place.

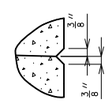


DETAIL A

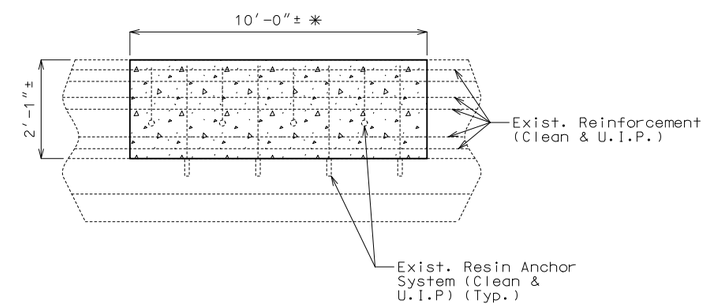


PART ELEVATION OF RIGHT CURB BLOCKOUT IN SPAN (3-4) SHOWING CURB BLOCKOUT REPLACEMENT

✳ Location to be as directed by engineer.

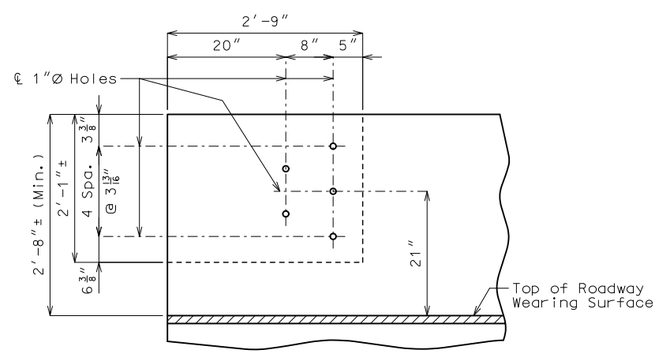


DETAILS OF GUARD RAIL ATTACHMENT

Notes:

All exposed edges of curb blockout shall have 1/2″ radius or 3/8″ bevel unless otherwise shown.

Concrete shall be Class B-1 with f′c = 4,000 psi.

Payment for concrete, reinforcing steel and any other work incidental to the curb blockout, complete in place, will be included in the contract unit price for Curb Blockout per linear foot.

Cost of any concrete curb or parapet repair will be included in the contract unit price for Curb Blockout.

All reinforcing steel shall be epoxy coated.

For details of concrete removal, see Sheet No. 3.

Bridge rail not shown for clarity.

# DETAILS OF CURB BLOCKOUT REPLACEMENT

Detailed Jan. 2020
Checked Jan. 2020

Note: This drawing is not to scale. Follow dimensions.



STATE OF MISSOURI
TRAVIS S. STUMP
NUMBER PE-2010000870
PROFESSIONAL ENGINEER
THIS SHEET HAS BEEN SIGNED, SEALED AND DATED ELECTRONICALLY.

| | |
|---|---|
| DATE PREPARED | 2/18/2020 |
| ROUTE | I-435 |
| STATE | MO |
| DISTRICT | BR |
| SHEET NO. | 5 |
| COUNTY | JACKSON |
| JOB NO. | J4P3266 |
| CONTRACT ID. | |
| PROJECT NO. | |
| BRIDGE NO. | A16406 |

DESCRIPTION

DATE

MISSOURI HIGHWAYS AND TRANSPORTATION COMMISSION
105 WEST CAPITOL
JEFFERSON CITY, MO 65102
1-888-ASK-MODOT (1-888-275-6636)

IF A SEAL IS PRESENT ON THIS SHEET IT HAS BEEN ELECTRONICALLY SEALED AND DATED.

# BILL OF REINFORCING STEEL

| NO. REQ'D. | MARK NO. SIZE | MARK NO. MARK | LOCATION | EPOXY (E) | SHAPE NO. | STIRRUP (S) | SUBSTR. (X) | VARIES (V) | NO. EACH | B FT. IN. | C FT. IN. | D FT. IN. | E FT. IN. | F FT. IN. | H FT. IN. | K FT. IN. | NOMINAL LENGTH FT. IN. | ACTUAL LENGTH FT. IN. | WEIGHT LBS. |
|---|---|---|---|---|---|---|---|---|---|---|---|---|---|---|---|---|---|---|---|
| | | | END BENT 1 | | | | | | | | | | | | | | | | |
| 8 | 8 | H1 | WING | E | 20 | | | | | 10 4.000 | | | | | | | 10 4 | 10 4 | 221 |
| 20 | 6 | H2 | WING | E | 20 | | | | | 10 4.000 | | | | | | | 10 4 | 10 4 | 310 |
| 4 | 5 | U1 | WING | E | 10 | S | | | | | 5 0.000 | 2 3.500 | | | | | 12 4 | 12 1 | 50 |
| 2 | 6 | V1 | WING | E | 20 | | | | | 7 2.000 | | | | | | | 7 2 | 7 2 | 22 |
| 16 | 6 | V2 | WING | E | 20 | | | | | 7 3.000 | | | | | | | 7 3 | 7 3 | 174 |
| 1 | 6 | V3 | WING | E | 20 | | | | | 7 4.000 | | | | | | | 7 4 | 7 4 | 11 |
| | | | BLOCKOUT | | | | | | | | | | | | | | | | |
| 8 | 5 | R1 | BLOCKOUT | E | 10 | S | | | | | 4 7.000 | 9.250 | | | | | 9 11 | 9 9 | 81 |
| 8 | 5 | R2 | BLOCKOUT | E | 10 | S | | | | | 2 6.000 | 12.500 | | | | | 6 1 | 5 10 | 49 |
| 19 | 5 | R3 | BLOCKOUT | E | 10 | S | | | | | 4 7.000 | 12.500 | | | | | 10 3 | 10 0 | 198 |
| 12 | 5 | R4 | BLOCKOUT | E | 20 | | | | | 5 10.000 | | | | | | | 5 10 | 5 10 | 73 |
| 6 | 5 | R5 | BLOCKOUT | E | 20 | | | | | 5 0.000 | | | | | | | 5 0 | 5 0 | 31 |
| 2 | 5 | R6 | BLOCKOUT | E | 20 | | | | | 7 9.000 | | | | | | | 7 9 | 7 9 | 16 |
| | | | TOTALS | | | | | | | | | | | | | | | | |
| | 5 | | | E | | | | | | | | | | | | | | | 498 |
| | 6 | | | E | | | | | | | | | | | | | | | 517 |
| | 8 | | | E | | | | | | | | | | | | | | | 221 |
| | | | TOTAL | | | | | | | | | | | | | | | | 0 |
| | | | TOTAL | E | | | | | | | | | | | | | | | 1236 |
| | | | Slab on Girder | | | | | | | | | | | | | | | | |
| | 5 | | | E | | | | | | | | | | | | | | | 498 |
| | 6 | | | E | | | | | | | | | | | | | | | 517 |
| | 8 | | | E | | | | | | | | | | | | | | | 221 |
| | | | TOTAL | | | | | | | | | | | | | | | | 1236 |

# BILL OF REINFORCING STEEL

| NO. REQ'D. | MARK NO. SIZE | MARK NO. MARK | LOCATION | EPOXY (E) | SHAPE NO. | STIRRUP (S) | SUBSTR. (X) | VARIES (V) | NO. EACH | B FT. IN. | C FT. IN. | D FT. IN. | E FT. IN. | F FT. IN. | H FT. IN. | K FT. IN. | NOMINAL LENGTH FT. IN. | ACTUAL LENGTH FT. IN. | WEIGHT LBS. |
|---|---|---|---|---|---|---|---|---|---|---|---|---|---|---|---|---|---|---|---|

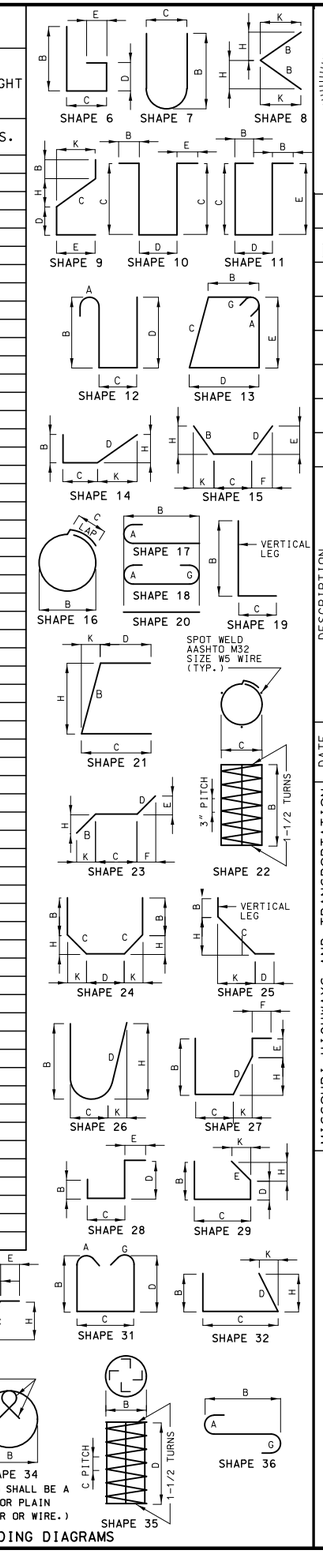


BENDING DIAGRAMS

STATE OF MISSOURI
TRAVIS S. STUMP
NUMBER PE-2010000870
PROFESSIONAL ENGINEER

THIS SHEET HAS BEEN SIGNED, SEALED AND DATED ELECTRONICALLY.

| | |
|---|---|
| DATE PREPARED | 2/18/2020 |
| ROUTE | I-435 |
| STATE | MO |
| DISTRICT | BR |
| SHEET NO. | 6 |
| COUNTY | JACKSON |
| JOB NO. | J4P3266 |
| CONTRACT ID. | |
| PROJECT NO. | |
| BRIDGE NO. | A16406 |

| DESCRIPTION | DATE |
|---|---|
| | |

MISSOURI HIGHWAYS AND TRANSPORTATION COMMISSION
105 WEST CAPITOL
JEFFERSON CITY, MO 65102
1-888-ASK-MODOT (1-888-275-6636)

IF A SEAL IS PRESENT ON THIS SHEET IT HAS BEEN ELECTRONICALLY SEALED AND DATED.

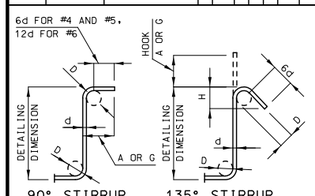


| STIRRUP HOOK DIMENSIONS | | | | |
|---|---|---|---|---|
| GRADES 40 - 50 - 60 KSI | | | | |
| BAR SIZE | D (IN.) | 90° HOOK | 135° HOOK | |
| | | HOOK A OR G | HOOK A OR G | APPROX. H |
| #4 | 2" | 4 1/2" | 4 1/2" | 3" |
| #5 | 2 1/2" | 6" | 5 1/2" | 3 3/4" |
| #6 | 4 1/2" | 12" | 8" | 4 1/2" |

NOTE: UNLESS OTHERWISE NOTED, DIAMETER "D" IS THE SAME FOR ALL BENDS AND HOOKS ON A BAR.

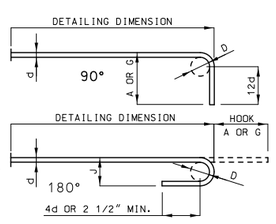


| END HOOK DIMENSIONS | | | | |
|---|---|---|---|---|
| BAR SIZE | D (IN.) | ALL GRADES | | |
| | | 180° HOOKS | | 90° HOOKS |
| | | A OR G | J | A OR G |
| #3 | 2 1/4" | 5" | 3" | 6" |
| #4 | 3" | 6" | 4" | 8" |
| #5 | 3 3/4" | 7" | 5" | 10" |
| #6 | 4 1/2" | 8" | 6" | 12" |
| #7 | 5 1/4" | 10" | 7" | 14" |
| #8 | 6" | 11" | 8" | 16" |
| #9 | 9 1/2" | 15" | 11 3/4" | 19" |
| #10 | 10 3/4" | 17" | 13 1/4" | 22" |
| #11 | 12" | 19" | 14 3/4" | 2'-0" |
| #14 | 18 1/4" | 2'-3" | 21 3/4" | 2'-7" |

**NOTE:**
ALL STANDARD HOOKS AND BENDS OTHER THAN 180 DEGREE ARE TO BE BENT WITH SAME PROCEDURE AS FOR 90 DEGREE STANDARD HOOKS.
HOOKS AND BENDS SHALL BE IN ACCORDANCE WITH THE PROCEDURES AS SHOWN ON THIS SHEET.
E = EPOXY COATED REINFORCEMENT.
S = STIRRUP.
X = BAR IS INCLUDED IN SUBSTRUCTURE QUANTITIES.
V = BAR DIMENSIONS VARY IN EQUAL INCREMENTS BETWEEN DIMENSIONS SHOWN ON THIS LINE AND THE FOLLOWING LINE.
NO. EA. = NUMBER OF BARS OF EACH LENGTH.
NOMINAL LENGTHS ARE BASED ON OUT TO OUT DIMENSIONS SHOWN IN BENDING DIAGRAMS AND ARE LISTED FOR FABRICATORS USE. (NEAREST INCH)
ACTUAL LENGTHS ARE MEASURED ALONG CENTERLINE BAR TO THE NEAREST INCH.
PAYWEIGHTS ARE BASED ON ACTUAL LENGTHS.
FOUR ANGLE OR CHANNEL SPACERS ARE REQUIRED FOR EACH COLUMN SPIRAL. SPACERS ARE TO BE PLACED ON INSIDE OF SPIRALS. LENGTH AND WEIGHT OF COLUMN SPIRALS DO NOT INCLUDE SPLICES OR SPACERS.
REINFORCING STEEL (GRADE 60) FY = 60,000 PSI.

Detailed Jan. 2020
Checked Jan. 2020

Note: This drawing is not to scale. Follow dimensions.

SEC/SUR 26 TWP 48N RGE 33W

# U.I.P. AND REHABILITATE EXISTING (45'-75'-75'-45') CONTINUOUS CONCRETE BOX GIRDER SPANS

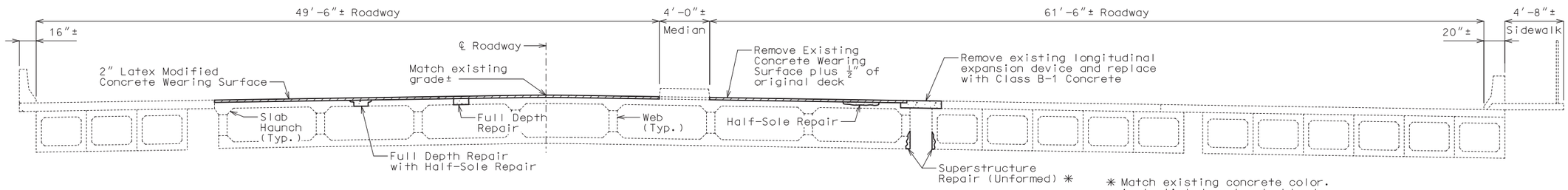


✳ Match existing concrete color. Apply tinted sealer to blend repairs to existing concrete.

TYPICAL SECTION THRU EXISTING DECK

## General Notes:

**Design Specifications:**

2002 AASTHO LFD (17th Ed.) Standard Specifications
Bridge Deck Rating = 5

**Design Loading:**

HS20-44 (1961, 1977, 1989 & New Construction) and Military 24,000 lb Tandem Axle

**Design Unit Stresses:**

Class B-1 Concrete (Half-Sole and Full Depth Repair and Slab Replacement) f'c = 4,000 psi
Reinforcing Steel (Grade 60) fy = 60,000 psi

**Reinforcing Steel:**

Minimum clearance to reinforcing steel shall be 1 1/2", unless otherwise shown.

**Miscellaneous:**

Roadway surfacing adjacent to bridge ends shall match new bridge wearing surface (roadway item).

All concrete repairs shall be in accordance with Sec 704, unless otherwise noted.

Outline of old work is indicated by light dashed lines. Heavy lines indicate new work.

Contractor shall verify all dimensions if field before ordering new material.

In order to maintain grade and a minimum thickness of wearing surface as shown on plans it may be necessary to use additional quantities of wearing surface at various locations throughout the structure. The cost of furnishing and installing the wearing surface will be considered completely covered in the contract unit price, including all additional labor, materials or equipment for variations in thickness of wearing surface.

Bars bonded in old concrete not removed shall be cleanly stripped and embedded into new concrete where possible. If length is available, old bars shall extend into new concrete at least 40 diameters for plain bars and 30 diameters for deformed bars, unless otherwise noted.

**Traffic Handling:**

Maintain traffic on structure during construction. See Sheet No. 2 for staged construction details.

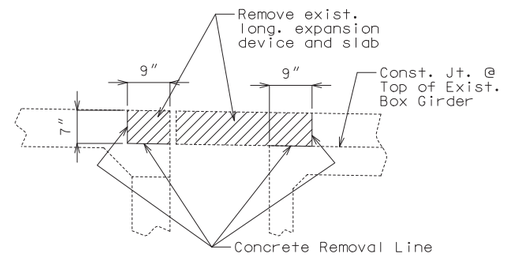


PART SECTION OF SLAB SHOWING REMOVAL

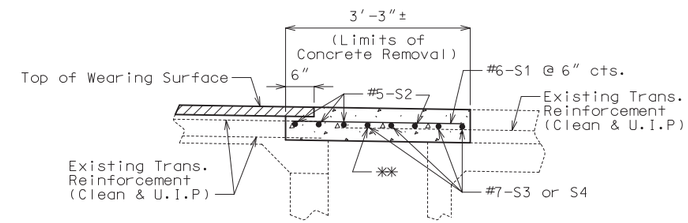


✳✳ Remove and replace existing long. reinf. as shown (spa. similar to existing) (Typ.)

PART SECTION SHOWING SLAB REPLACEMENT

Notes:

Concrete for the slab shall be Class B-1.

Removal of existing expansion device within the limits shown will be considered completely covered by the contract unit price for Removal of Existing Expansion Joint & Adjacent Concrete.

Payment for slab concrete, complete-in-place, will be considered completely covered by the contract unit price for Class B-1 Concrete.

Payment for furnishing and installing all reinforcement in the slab will be considered completely covered by the contract unit price for Reinforcing Steel (Epoxy Coated).

Minimum lap for #5-S2 shall be 3'-3"

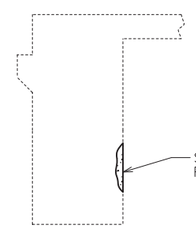

TYPICAL SECTION THRU END BENTS NO. 1 & 5 SHOWING SUBSTRUCTURE REPAIR (FORMED)

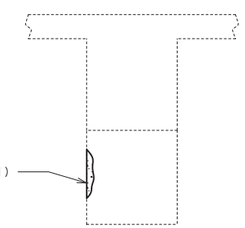


TYPICAL SECTION THRU INT. BENTS NO. 2 & 4 SHOWING SUBSTRUCTURE REPAIR (FORMED)

### Estimated Quantities

| Item | | Total |
|---|---|---|
| Removal of Concrete Wearing Surface | sq. foot | 12,442 |
| Removal of Existing Expansion Joint & Adjacent Concrete | linear foot | 243 |
| Latex Modified Concrete Wearing Surface | sq. yard | 1376 |
| Class B-1 Concrete | cu. yard | 16.3 |
| Substructure Repair (Formed) | sq. foot | 200 |
| Superstructure Repair (Unformed) | sq. foot | 500 |
| Half-Sole Repair | sq. foot | 1850 |
| Full Depth Repair | sq. foot | 600 |
| Reinforcing Steel (Epoxy Coated) | pound | 4280 |
| | | |
| | | |
| | | |
| | | |
| | | |

### Table Showing S-Bar Lengths

| Int. Bent No. 2 | | Int. Bent No. 3 | | Int. Bent No. 4 | |
|---|---|---|---|---|---|
| #7-S3 | | #7-S4 | | #7-S3 | |
| Span 1 | Span 2 | Span 2 | Span 3 | Span 3 | Span 4 |
| 25'-8" | 13'-6" | 24'-1" | 24'-1" | 13'-6" | 25'-8" |

REPAIRS TO BRIDGE: BANNISTER ROAD OVER I-435

ROUTE BANNISTER ROAD FROM I-49 TO BLUE RIDGE BLVD.
ABOUT 0.5 MILES EAST OF I-49
STA. 238+15.11± (Match Existing) (BANNISTER ROAD)

STD. 617.10
STD. 617.20
STD. 706.35

Detailed Jan. 2020
Checked Jan. 2020

Note: This drawing is not to scale. Follow dimensions.



STATE OF MISSOURI
TRAVIS S. STUMP
NUMBER PE-2010000870
PROFESSIONAL ENGINEER
THIS SHEET HAS BEEN SIGNED, SEALED AND DATED ELECTRONICALLY.

DATE PREPARED 3/3/2020
ROUTE I-435 | STATE MO
DISTRICT BR | SHEET NO. 1
COUNTY JACKSON
JOB NO. J4P3266
CONTRACT ID.
PROJECT NO.
BRIDGE NO. A16433

DESCRIPTION | DATE

MISSOURI HIGHWAYS AND TRANSPORTATION COMMISSION
105 WEST CAPITOL
JEFFERSON CITY, MO 65102
1-888-ASK-MODOT (1-888-275-6636)

IF A SEAL IS PRESENT ON THIS SHEET IT HAS BEEN ELECTRONICALLY SEALED AND DATED.

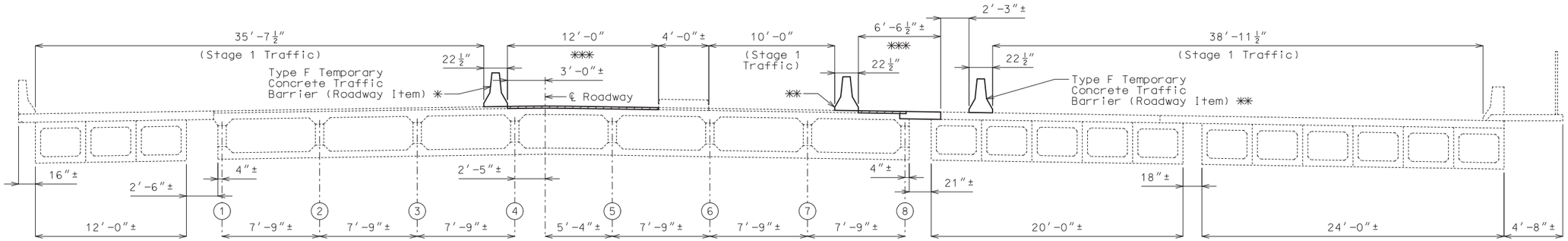


STAGE 1 CONSTRUCTION

✳✳✳ (Stage 1 Construction)

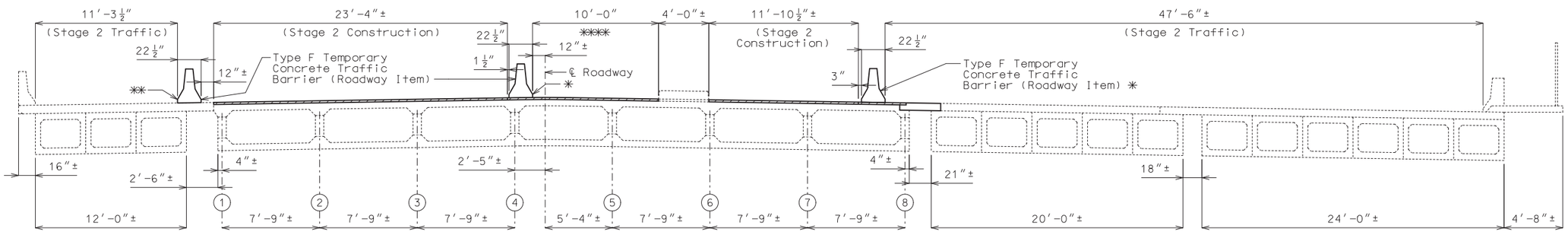


✳✳✳✳ (Stage 2 Traffic) STAGE 2 CONSTRUCTION

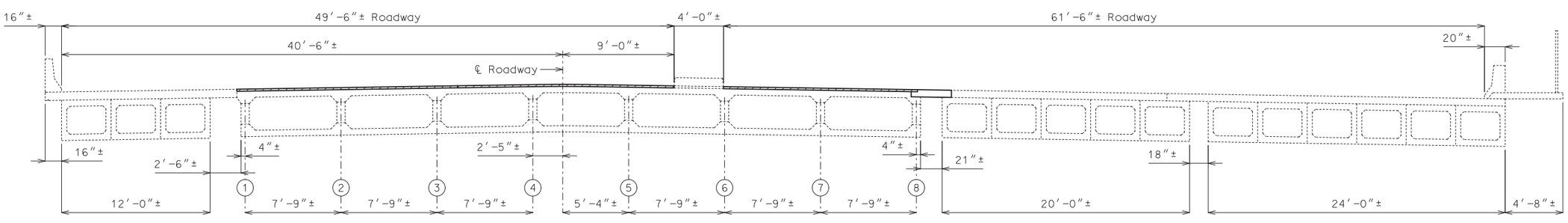


FINAL STAGE

Notes:

✳ Type F Temporary Concrete Barrier shall be unattached.

✳✳ Method of attachment for Type F Temporary Concrete Barrier shall be tie down strap.

# DETAILS SHOWING STAGED CONSTRUCTION

Detailed Jan. 2020
Checked Jan. 2020

Note: This drawing is not to scale. Follow dimensions.



STATE OF MISSOURI
TRAVIS S. STUMP
NUMBER
PE-2010000870
PROFESSIONAL ENGINEER

THIS SHEET HAS BEEN SIGNED, SEALED AND DATED ELECTRONICALLY.

DATE PREPARED
2/18/2020

| ROUTE | STATE |
|---|---|
| I-435 | MO |
| DISTRICT | SHEET NO. |
| BR | 2 |

COUNTY
JACKSON

JOB NO.
J4P3266

CONTRACT ID.

PROJECT NO.

BRIDGE NO.
A16433

| DESCRIPTION | DATE |
|---|---|
| | |

MISSOURI HIGHWAYS AND TRANSPORTATION COMMISSION

105 WEST CAPITOL
JEFFERSON CITY, MO 65102
1-888-ASK-MODOT (1-888-275-6636)

IF A SEAL IS PRESENT ON THIS SHEET IT HAS BEEN ELECTRONICALLY SEALED AND DATED.

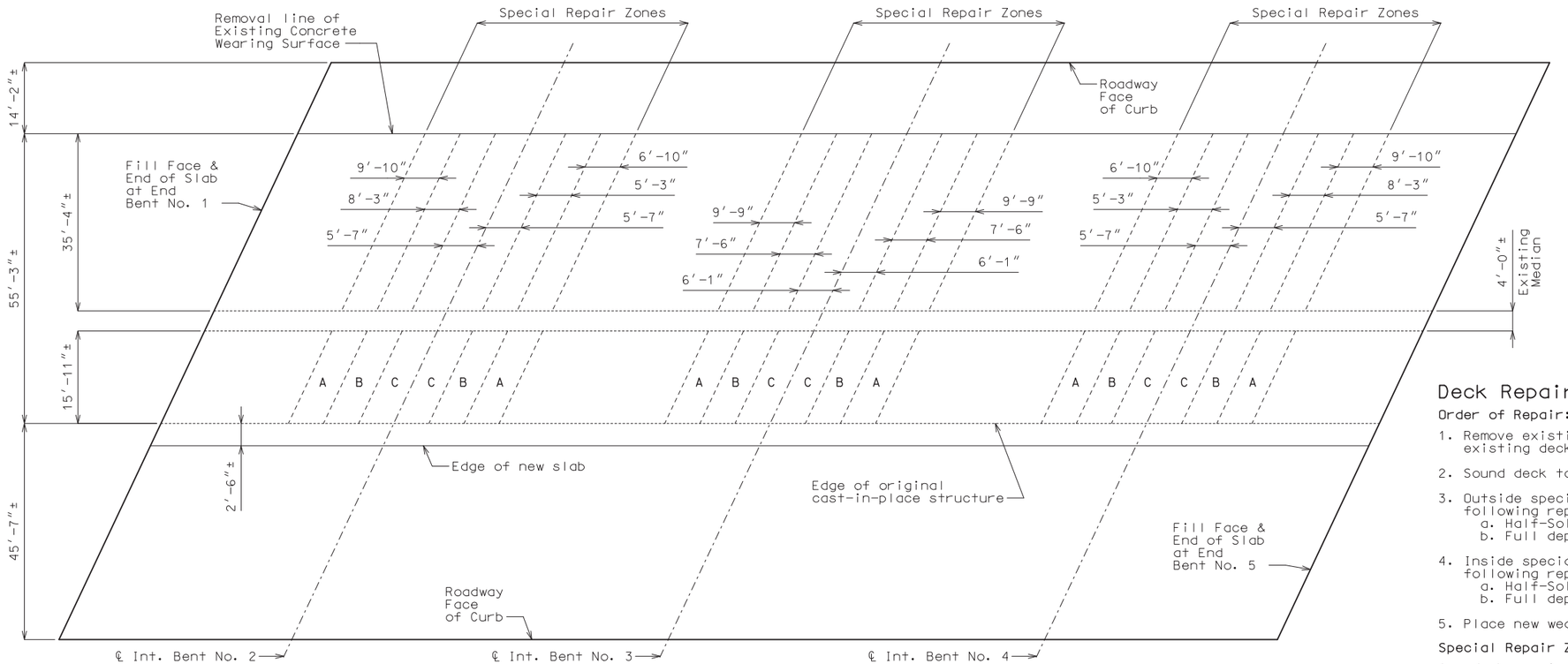


PLAN OF SLAB SHOWING SPECIAL REPAIR ZONES

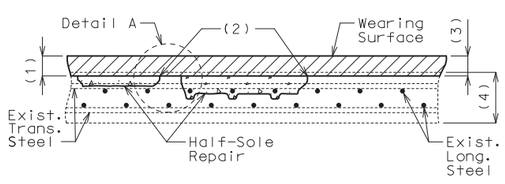


HALF-SOLE REPAIR

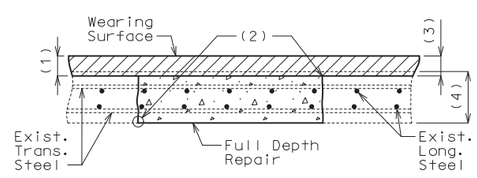


FULL DEPTH REPAIR

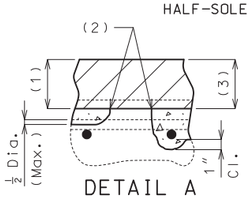


Clearance around top bar and around bottom bar at the intersection of top bar shall be required when more than half the diameter of the top bar is exposed.

DETAIL A

DECK REPAIR

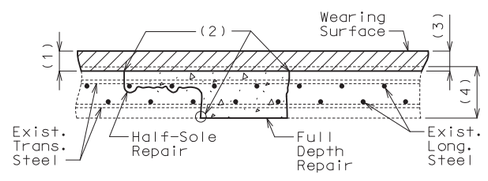


FULL DEPTH REPAIR WITH HALF-SOLE REPAIR

(1) Removal of existing 1 1/2″± concrete overlay plus 1/2″ of existing deck

(2) 1″ vertical side shall be established outside the deteriorated area.

(3) 2″ Latex Modified Concrete Wearing Surface

(4) Original thickness of top slab minus previous scarification

## Deck Repair Notes:

**Order of Repair:**

1. Remove existing wearing surface plus 1/2″ of existing deck.
2. Sound deck to identify areas in need of repair.
3. Outside special repair zones, complete the following repairs:
   a. Half-Sole Repair
   b. Full depth repair
4. Inside special repair zones, complete the following repairs:
   a. Half-Sole Repair
   b. Full depth repair
5. Place new wearing surface.

**Special Repair Zones:**

Any deck repair in areas not designated as a special repair zone shall be completed prior to work in Zone A.

Deck repair required in the areas designated as special repair zones shall be completed in alphabetical sequence beinning with Zone A. Zones with the same letter designation may be repaired at the same time.

Removal and deck repair shall be completed in one special repair zone and concrete shall have attained a compressive strength of 3200 psi before work can be started in the next special repair zone.

Total width of full depth repair shall not exceed 1/3 of the deck width at one time. For any area of deck repair that extends over a web and is more than 18 inches in length along the web, the concrete removal shall stop at the centerline of web and repair completed in this area. Prior to continuing work in this area, the concrete shall have attained a compressive strength of 3200 psi. No traffic shall be permitted over the web that is undergoing repair.

When the full depth repair extends over a diaphragm or web and the deteriorated concrete extends into the diaphragm or web, all deteriorated concrete shall be removed and replaced as full depth repair. Concrete in webs shall not be removed below the slab haunch of the girder without prior review and approval from the engineer.

Interior falsework installed by the contractor resting on the bottom slab shall be removed where entry access is available.

If any single repair area does not exceed 9 square feet in size and the total repair area within a special repair zone does not exceed 27 square feet, the special repair zone may be repaired at the same time as an adjacent zone.

STATE OF MISSOURI
TRAVIS S. STUMP
NUMBER PE-2010000870
PROFESSIONAL ENGINEER

THIS SHEET HAS BEEN SIGNED, SEALED AND DATED ELECTRONICALLY.

DATE PREPARED 3/3/2020

| ROUTE | STATE |
|---|---|
| I-435 | MO |
| DISTRICT | SHEET NO. |
| BR | 3 |

COUNTY: JACKSON
JOB NO.: J4P3266
CONTRACT ID.:
PROJECT NO.:
BRIDGE NO.: A16433

| DATE | DESCRIPTION |
|---|---|

MISSOURI HIGHWAYS AND TRANSPORTATION COMMISSION
105 WEST CAPITOL
JEFFERSON CITY, MO 65102
1-888-ASK-MODOT (1-888-275-6636)

IF A SEAL IS PRESENT ON THIS SHEET IT HAS BEEN ELECTRONICALLY SEALED AND DATED.

# BILL OF REINFORCING STEEL

| NO. REQ'D. | MARK NO. SIZE | MARK NO. MARK | LOCATION | EPOXY (E) | SHAPE NO. | STIRRUP (S) | SUBSTR. (X) | VARIES (V) | NO. EACH | B FT. IN. | C FT. IN. | D FT. IN. | E FT. IN. | F FT. IN. | H FT. IN. | K FT. IN. | NOMINAL LENGTH FT. IN. | ACTUAL LENGTH FT. IN. | WEIGHT LBS. |
|---|---|---|---|---|---|---|---|---|---|---|---|---|---|---|---|---|---|---|---|
| | | | SLAB | | | | | | | | | | | | | | | | |
| 483 | 6 | S1 | SLAB | E | 20 | | | | | 3 0.000 | | | | | | | 3 0 | 3 0 | 2176 |
| 20 | 5 | S2 | SLAB | E | 20 | | | | | 51 1.000 | | | | | | | 51 1 | 51 1 | 1066 |
| 8 | 7 | S3 | SLAB | E | 20 | | | | | 39 2.000 | | | | | | | 39 2 | 39 2 | 640 |
| 4 | 7 | S4 | SLAB | E | 20 | | | | | 48 2.000 | | | | | | | 48 2 | 48 2 | 394 |
| | | | TOTALS | | | | | | | | | | | | | | | | |
| | 5 | | | E | | | | | | | | | | | | | | | 1066 |
| | 6 | | | E | | | | | | | | | | | | | | | 2176 |
| | 7 | | | E | | | | | | | | | | | | | | | 1034 |
| | | | TOTAL | | | | | | | | | | | | | | | | 0 |
| | | | TOTAL | E | | | | | | | | | | | | | | | 4276 |
| | | | Slab on Girder | | | | | | | | | | | | | | | | |
| | 5 | | | E | | | | | | | | | | | | | | | 1066 |
| | 6 | | | E | | | | | | | | | | | | | | | 2176 |
| | 7 | | | E | | | | | | | | | | | | | | | 1034 |
| | | | TOTAL | | | | | | | | | | | | | | | | 4276 |

# BILL OF REINFORCING STEEL

| NO. REQ'D. | MARK NO. SIZE | MARK NO. MARK | LOCATION | EPOXY (E) | SHAPE NO. | STIRRUP (S) | SUBSTR. (X) | VARIES (V) | NO. EACH | B FT. IN. | C FT. IN. | D FT. IN. | E FT. IN. | F FT. IN. | H FT. IN. | K FT. IN. | NOMINAL LENGTH FT. IN. | ACTUAL LENGTH FT. IN. | WEIGHT LBS. |
|---|---|---|---|---|---|---|---|---|---|---|---|---|---|---|---|---|---|---|---|

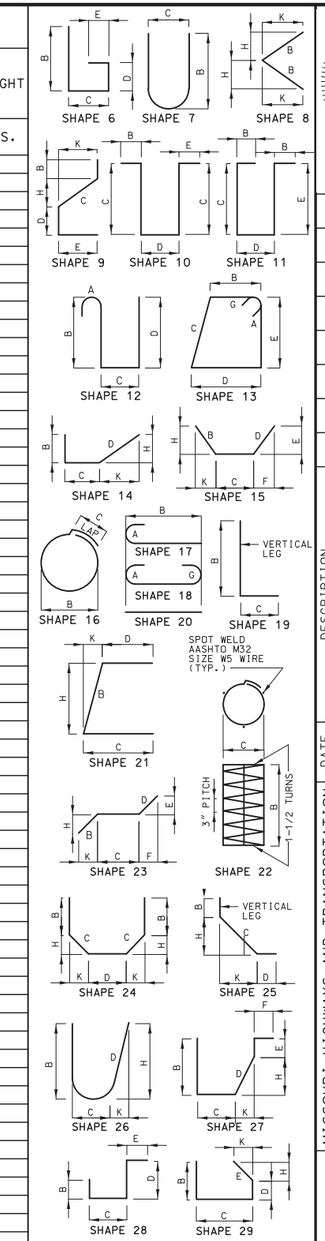


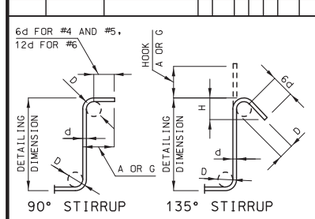


## STIRRUP HOOK DIMENSIONS

GRADES 40 - 50 - 60 KSI

| BAR SIZE | D (IN.) | 90° HOOK: HOOK A OR G | 135° HOOK: HOOK A OR G | 135° HOOK: APPROX. H |
|---|---|---|---|---|
| #4 | 2" | 4 1/2" | 4 1/2" | 3" |
| #5 | 2 1/2" | 6" | 5 1/2" | 3 3/4" |
| #6 | 4 1/2" | 12" | 8" | 4 1/2" |

NOTE: UNLESS OTHERWISE NOTED, DIAMETER "D" IS THE SAME FOR ALL BENDS AND HOOKS ON A BAR.

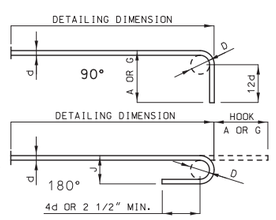


## END HOOK DIMENSIONS

| BAR SIZE | D (IN.) | ALL GRADES: 180° HOOKS: A OR G | ALL GRADES: 180° HOOKS: J | ALL GRADES: 90° HOOKS: A OR G |
|---|---|---|---|---|
| #3 | 2 1/4" | 5" | 3" | 6" |
| #4 | 3" | 6" | 4" | 8" |
| #5 | 3 3/4" | 7" | 5" | 10" |
| #6 | 4 1/2" | 8" | 6" | 12" |
| #7 | 5 1/4" | 10" | 7" | 14" |
| #8 | 6" | 11" | 8" | 16" |
| #9 | 9 1/2" | 15" | 11 3/4" | 19" |
| #10 | 10 3/4" | 17" | 13 1/4" | 22" |
| #11 | 12" | 19" | 14 3/4" | 2'-0" |
| #14 | 18 1/4" | 2'-3" | 21 3/4" | 2'-7" |

**NOTE:**

ALL STANDARD HOOKS AND BENDS OTHER THAN 180 DEGREE ARE TO BE BENT WITH SAME PROCEDURE AS FOR 90 DEGREE STANDARD HOOKS.
HOOKS AND BENDS SHALL BE IN ACCORDANCE WITH THE PROCEDURES AS SHOWN ON THIS SHEET.
E = EPOXY COATED REINFORCEMENT.
S = STIRRUP.
X = BAR IS INCLUDED IN SUBSTRUCTURE QUANTITIES.
V = BAR DIMENSIONS VARY IN EQUAL INCREMENTS BETWEEN DIMENSIONS SHOWN ON THIS LINE AND THE FOLLOWING LINE.
NO. EA. = NUMBER OF BARS OF EACH LENGTH.
NOMINAL LENGTHS ARE BASED ON OUT TO OUT DIMENSIONS SHOWN IN BENDING DIAGRAMS AND ARE LISTED FOR FABRICATORS USE. (NEAREST INCH)
ACTUAL LENGTHS ARE MEASURED ALONG CENTERLINE BAR TO THE NEAREST INCH.
PAYWEIGHTS ARE BASED ON ACTUAL LENGTHS.
FOUR ANGLE OR CHANNEL SPACERS ARE REQUIRED FOR EACH COLUMN SPIRAL. SPACERS ARE TO BE PLACED ON INSIDE OF SPIRALS. LENGTH AND WEIGHT OF COLUMN SPIRALS DO NOT INCLUDE SPLICES OR SPACERS.
REINFORCING STEEL (GRADE 60) FY = 60,000 PSI.

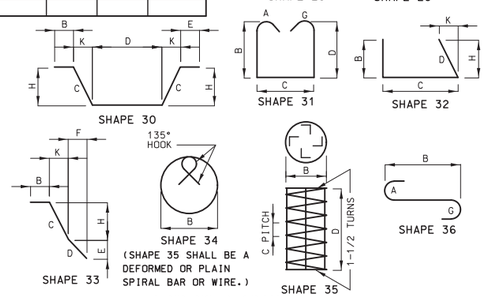


BENDING DIAGRAMS

STATE OF MISSOURI
TRAVIS S. STUMP
NUMBER PE-2010000870
PROFESSIONAL ENGINEER
THIS SHEET HAS BEEN SIGNED, SEALED AND DATED ELECTRONICALLY.

DATE PREPARED 2/18/2020
ROUTE I-435 | STATE MO
DISTRICT BR | SHEET NO. 4
COUNTY JACKSON
JOB NO. J4P3266
CONTRACT ID.
PROJECT NO.
BRIDGE NO. A16433

| DATE | DESCRIPTION |
|---|---|

MISSOURI HIGHWAYS AND TRANSPORTATION COMMISSION
105 WEST CAPITOL
JEFFERSON CITY, MO 65102
1-888-ASK-MODOT (1-888-275-6636)

IF A SEAL IS PRESENT ON THIS SHEET IT HAS BEEN ELECTRONICALLY SEALED AND DATED.

Detailed Jan. 2020
Checked Jan. 2020

Note: This drawing is not to scale. Follow dimensions.

SEC/SUR 8 TWP 50N RGE 32W

# U.I.P. AND REHABILITATE EXISTING (56'-70'-70'-42') CONTINUOUS CONCRETE VOIDED SLAB SPANS

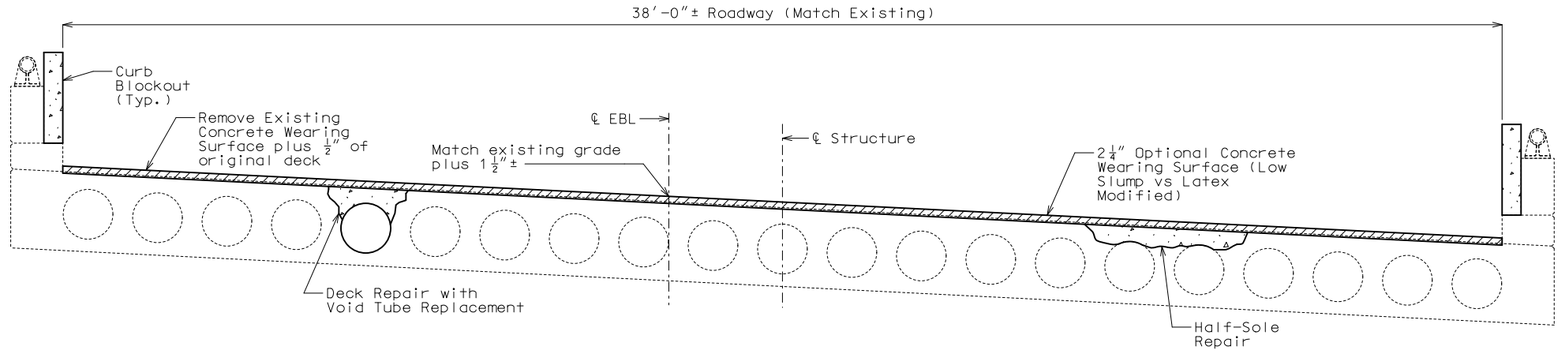


TYPICAL SECTION THRU EXISTING DECK

## Estimated Quantities

| Item | | Total |
|---|---|---|
| Removal of Concrete Wearing Surface | sq. foot | 9139 |
| Optional Concrete Wearing Surface | sq. yard | 1015 |
| Curb Blockout | linear foot | 509 |
| Half-Sole Repair | sq. foot | 900 |
| Deck Repair with Void Tube Replacement | sq. foot | 450 |
| | | |
| | | |
| | | |
| | | |
| | | |

## Optional Concrete Wearing Surface

| Type of Concrete Wearing Surface | Type Used (✓) |
|---|---|
| Low Slump Concrete Wearing Surface | |
| Latex Modified Concrete Wearing Surface | |

MoDOT construction personnel will complete column labeled "Type Used (✓)".

The contractor shall select one of the alternate concrete wearing surfaces listed in the table. The alternate concrete wearing surface method of measurement and basis of payment shall be in accordance with Sec 505.

## General Notes:

**Design Specifications:**

2002 AASTHO LFD (17th Ed.) Standard Specifications
Bridge Deck Rating = 5

**Design Loading:**

HS20-44 (1965 & New Construction)

**Design Unit Stresses:**

Class B-1 Concrete (Half-Sole and Deck Repair with Void Tube Replacement and Curb Blockout) f'c = 4,000 psi
Reinforcing Steel (Grade 60) fy = 60,000 psi

**Reinforcing Steel:**

Minimum clearance to reinforcing steel shall be 1 1/2", unless otherwise shown.

**Joint Filler:**

All joint filler shall be in accordance with Sec 1057 for preformed sponge rubber expansion and partition joint filler, except as noted.

**Miscellaneous:**

Roadway surfacing adjacent to bridge ends shall match new bridge wearing surface (roadway item).

All concrete repairs shall be in accordance with Sec 704, unless otherwise noted.

Outline of old work is indicated by light dashed lines. Heavy lines indicate new work.

Contractor shall verify all dimensions if field before ordering new material.

In order to maintain grade and a minimum thickness of wearing surface as shown on plans it may be necessary to use additional quantities of wearing surface at various locations throughout the structure. The cost of furnishing and installing the wearing surface will be considered completely covered in the contract unit price, including all additional labor, materials or equipment for variations in thickness of wearing surface.

Bars bonded in old concrete not removed shall be cleanly stripped and embedded into new concrete where possible. If length is available, old bars shall extend into new concrete at least 40 diameters for plain bars and 30 diameters for deformed bars, unless otherwise noted.

**Traffic Handling:**

Maintain traffic on structure during construction. See Sheet No. 2 for staged construction details.

REPAIRS TO BRIDGE: ROUTE 210 EB
OVER N. BRIGHTON AVE. & BUCKEYE CREEK

ROUTE 210 EB FROM ROUTE I-35 TO ROUTE I-435
ABOUT 1.4 MILES WEST OF ROUTE I-435
STA. 114+85.23± (Match Existing)

STD. 617.10
STD. 617.20
STD. 706.35

Detailed Jan. 2020
Checked Jan. 2020

Note: This drawing is not to scale. Follow dimensions.



STATE OF MISSOURI
TRAVIS S. STUMP
NUMBER PE-2010000870
PROFESSIONAL ENGINEER
THIS SHEET HAS BEEN SIGNED, SEALED AND DATED ELECTRONICALLY.

DATE PREPARED 3/3/2020
ROUTE 210 | STATE MO
DISTRICT BR | SHEET NO. 1
COUNTY CLAY
JOB NO. J4P3266
CONTRACT ID.
PROJECT NO.
BRIDGE NO. A21773

| DATE | DESCRIPTION |
|---|---|
| | |

IF A SEAL IS PRESENT ON THIS SHEET IT HAS BEEN ELECTRONICALLY SEALED AND DATED.

MISSOURI HIGHWAYS AND TRANSPORTATION COMMISSION
105 WEST CAPITOL
JEFFERSON CITY, MO 65102
1-888-ASK-MODOT (1-888-275-6636)

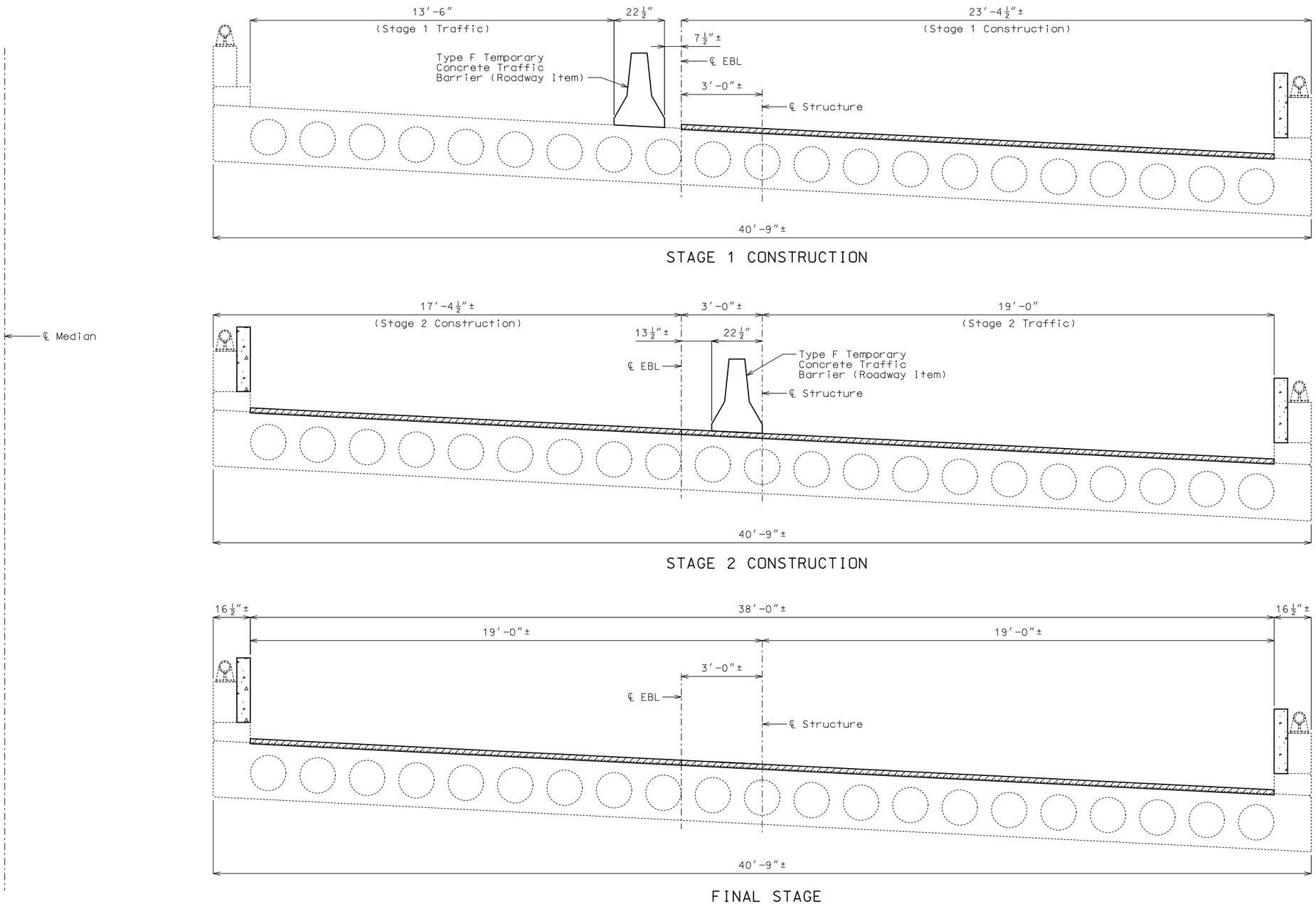


Note:
Method of attachment for Type F Temporary Concrete Barrier shall be tie down strap.

# DETAILS SHOWING STAGED CONSTRUCTION

Detailed Jan. 2020
Checked Jan. 2020

Note: This drawing is not to scale. Follow dimensions.



STATE OF MISSOURI
TRAVIS S. STUMP
NUMBER PE-2010000870
PROFESSIONAL ENGINEER

THIS SHEET HAS BEEN SIGNED, SEALED AND DATED ELECTRONICALLY.

| | |
|---|---|
| DATE PREPARED | 2/18/2020 |
| ROUTE | 210 |
| STATE | MO |
| DISTRICT | BR |
| SHEET NO. | 2 |
| COUNTY | CLAY |
| JOB NO. | J4P3266 |
| CONTRACT ID. | |
| PROJECT NO. | |
| BRIDGE NO. | A21773 |

| DATE | DESCRIPTION |
|---|---|

MISSOURI HIGHWAYS AND TRANSPORTATION COMMISSION
105 WEST CAPITOL
JEFFERSON CITY, MO 65102
1-888-ASK-MODOT (1-888-275-6636)

IF A SEAL IS PRESENT ON THIS SHEET IT HAS BEEN ELECTRONICALLY SEALED AND DATED.

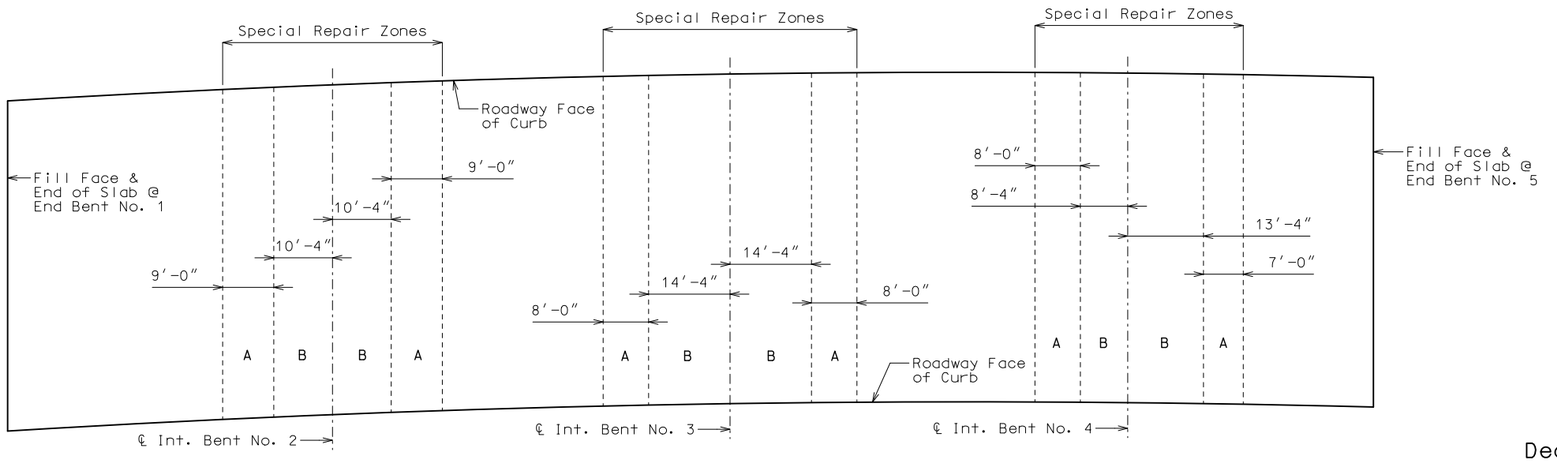


PLAN OF SLAB SHOWING SPECIAL REPAIR ZONES

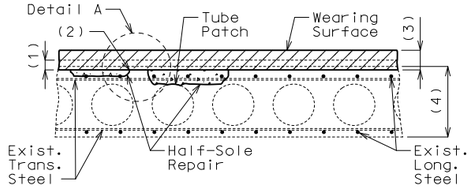


HALF-SOLE REPAIR

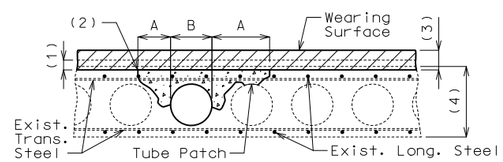


DECK REPAIR WITH VOID TUBE REPLACEMENT

A = Half-Sole Repair
B = Deck Repair with Void Tube Replacement

DECK REPAIR

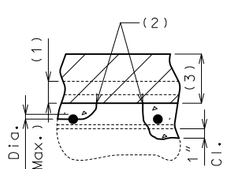


DETAIL A

Clearance around top bar and around bottom bar at the intersection of top bar shall be required when more than half the diameter of the top bar is exposed.

(1) Removal of existing 1/4"± epoxy polymer concrete overlay plus 1/2" of existing deck

(2) 1" vertical side shall be established outside the deteriorated area.

(3) 2 1/4" minimum optional concrete wearing surface

(4) Original depth

## Deck Repair Notes:

**Order of Repair:**

1. Remove existing wearing surface plus 1/2" of existing deck.
2. Sound deck to identify areas in need of repair.
3. Outside special repair zones, complete the following repairs:
   a. Half-Sole Repair
   b. Deck repair with void tube replacement
4. Inside special repair zones, complete the following repairs:
   a. Half-Sole Repair
   b. Deck repair with void tube replacement
5. Place new wearing surface.

**Special Repair Zones:**

Any deck repair in areas not designated as a special repair zone shall be completed prior to work in Zone A.

Deck repair required in the areas designated as special repair zones shall be completed in alphabetical sequence beginning with Zone A. Zones with the same letter designation may be repaired at the same time.

Removal and deck repair shall be completed in one special repair zone and concrete shall have attained a compressive strength of 3200 psi before work can be started in the next special repair zone.

If any single repair area does not exceed 4 square feet in size and the total repair area within a special repair zone does not exceed 12 square feet, the special repair zone may be repaired at the same time as an adjacent zone.

**Void Repair:**

Any damage sustained to the void tube as a result of the contractor's operations shall be patched or replaced as required by the engineer at the contractor's expense.

An exposed void in the deck shall be patched as approved by the engineer in a manner that shall maintain the void area completely free of concrete. Cost of patching an exposed void will be considered completely covered by the contract unit price for Half-Sole Repair.

When a deteriorated portion of the void tube is beyond the point of patching as determined by the engineer, the portion of the deteriorated void tube shall be replaced. The void area shall be maintained completely free of concrete. Cutting of the longitudinal reinforcing steel will not be permitted. The fiber tubes for producing the voids shall have an outside diameter with the wall thickness the same as the existing tubes and anchored at not more than the original spacing. Cost of replacing the void tube will be considered completely covered by the contract unit price for Deck Repair with Void Tube Replacement. Measurement will be horizontal projection of the area of exposed tube in plan.

# DECK REPAIR DETAILS

Detailed Jan. 2020
Checked Jan. 2020

Note: This drawing is not to scale. Follow dimensions.



STATE OF MISSOURI
TRAVIS S. STUMP
NUMBER PE-2010000870
PROFESSIONAL ENGINEER

THIS SHEET HAS BEEN SIGNED, SEALED AND DATED ELECTRONICALLY.

| | |
|---|---|
| DATE PREPARED 3/3/2020 | |
| ROUTE 210 | STATE MO |
| DISTRICT BR | SHEET NO. 3 |
| COUNTY CLAY | |
| JOB NO. J4P3266 | |
| CONTRACT ID. | |
| PROJECT NO. | |
| BRIDGE NO. A21773 | |

| DESCRIPTION | DATE |
|---|---|
| | |

MISSOURI HIGHWAYS AND TRANSPORTATION COMMISSION
105 WEST CAPITOL
JEFFERSON CITY, MO 65102
1-888-ASK-MODOT (1-888-275-6636)

IF A SEAL IS PRESENT ON THIS SHEET IT HAS BEEN ELECTRONICALLY SEALED AND DATED.

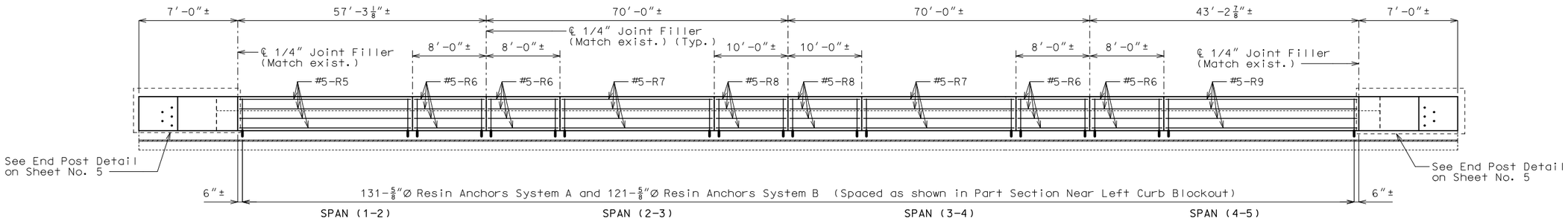


## SECTION NEAR LEFT CURB BLOCKOUT

(Right curb blockout similar)

Notes:

Longitudinal dimensions shown are along grade and are taken at top outside edge of parapet.

Bridge rail not shown for clarity.

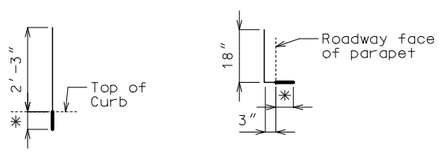


RESIN ANCHOR SYSTEM A
(302 req'd)
(Install in curb)

RESIN ANCHOR SYSTEM B
(242 req'd)
(Install in parapet)

* Use manufacturer's embedment length (5" minimum embedment).

## DETAILS OF RESIN ANCHORS

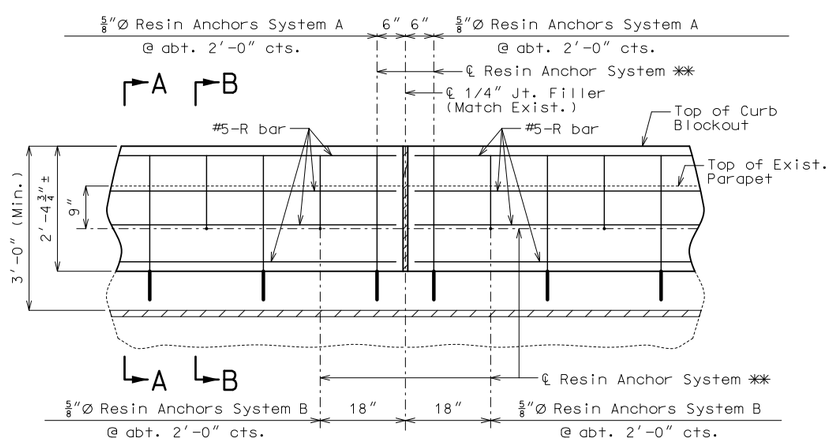


## PART SECTION NEAR CURB BLOCKOUT

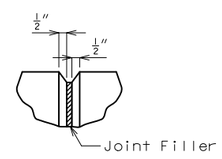


## FILLED JOINT DETAIL

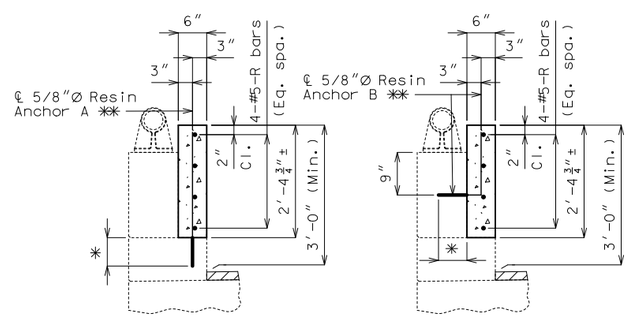


SECTION A-A

SECTION B-B

## CURB BLOCKOUT

Notes:

Concrete in curb blockout shall be Class B-1 with f'c = 4000 psi.

Measurement of curb blockout is to the nearest linear foot, measured at the top outside edge of parapet. (Match existing curb and parapet)

All exposed edges of curb blockout shall have 1/2" radius or 3/8" bevel unless otherwise shown.

Payment for concrete, reinforcing steel, resin anchor systems, and any other work incidental to the curb blockout, complete in place, will be included in the contract unit price for Curb Blockout per linear foot.

Cost of any concrete curb or parapet repair will be included in the contract unit price for Curb Blockout.

All curb blockout reinforcement shall be epoxy coated.

** Shift resin anchors where necessary to clear existing anchor bolts for bridge rail, miss curb outlets (if present) and clear existing reinforcement.

Use a minimum lap of 3'-1" for #5 horizontal curb blockout bars.

Concrete traffic barrier delineators shall be placed on top of the curb blockout similarly as shown on Missouri Standard Plans 617.10 and in accordance with Sec 617. Delineators on bridges with two-lane, two-way traffic shall have retroflective sheeting on both sides. Concrete traffic barrier delineators will be considered completely covered by the contract unit price for Curb Blockout.

The contractor shall use one of the qualified resin anchor systems in accordance with Sec 1039.

The minimum embedment depth in concrete with f'c = 4,000 psi for the resin anchor system shall be that required to meet the minimum ultimate pullout strength in accordance with Sec 1039 but shall not be less than 5 inches.

An epoxy coated #5 Grade 60 reinforcing bar shall be substituted for the 5/8"Ø threaded rod.

Detailed Jan. 2020
Checked Jan. 2020

Note: This drawing is not to scale. Follow dimensions.



STATE OF MISSOURI
TRAVIS S. STUMP
NUMBER PE-2010000870
PROFESSIONAL ENGINEER

THIS SHEET HAS BEEN SIGNED, SEALED AND DATED ELECTRONICALLY.

| DATE PREPARED | |
|---|---|
| 2/18/2020 | |
| ROUTE 210 | STATE MO |
| DISTRICT BR | SHEET NO. 4 |
| COUNTY CLAY | |
| JOB NO. J4P3266 | |
| CONTRACT ID. | |
| PROJECT NO. | |
| BRIDGE NO. A21773 | |

| DATE | DESCRIPTION |
|---|---|
| | |

MISSOURI HIGHWAYS AND TRANSPORTATION COMMISSION
105 WEST CAPITOL
JEFFERSON CITY, MO 65102
1-888-ASK-MODOT (1-888-275-6636)

IF A SEAL IS PRESENT ON THIS SHEET IT HAS BEEN ELECTRONICALLY SEALED AND DATED.

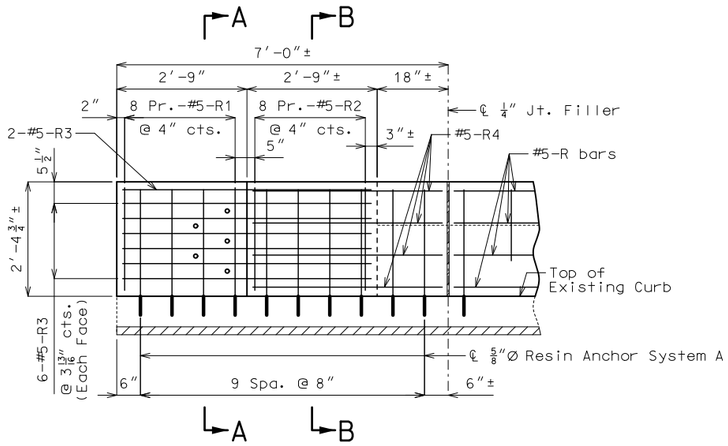


ELEVATION SHOWING LEFT END POST
AT EXISTING END BENT NO. 1
(Right End Post at End Bent No. 1 similar)

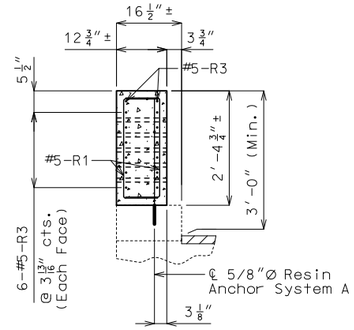


SECTION A-A

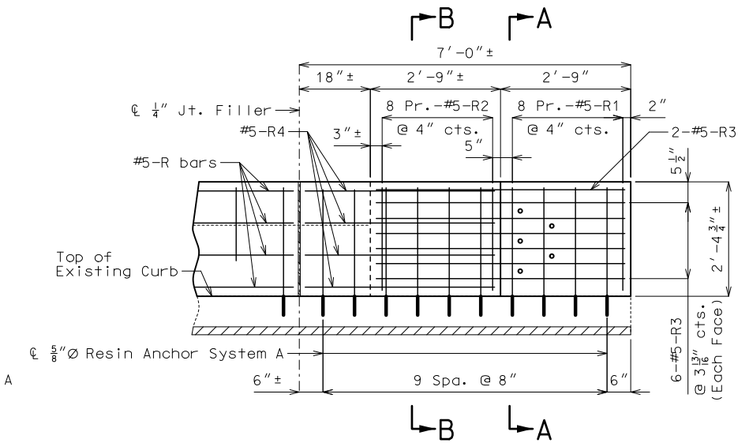


ELEVATION SHOWING LEFT END POST
AT EXISTING END BENT NO. 5
(Right End Post at End Bent No. 5 similar)

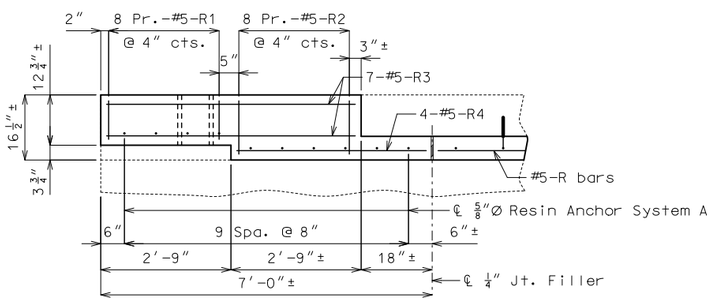


PLAN SHOWING LEFT END POST
AT EXISTING END BENT NO. 1

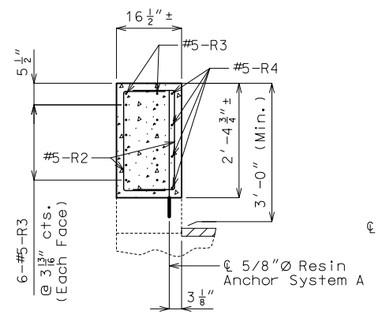


SECTION B-B

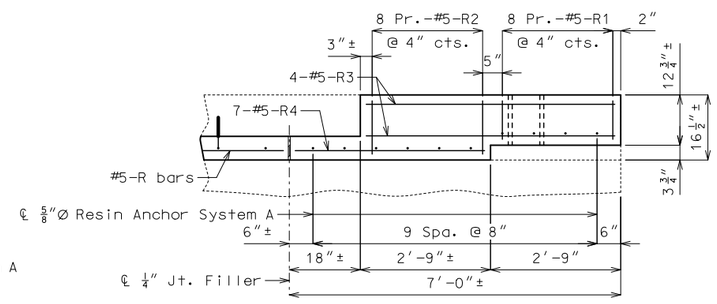


PLAN SHOWING LEFT END POST
AT EXISTING END BENT NO. 5

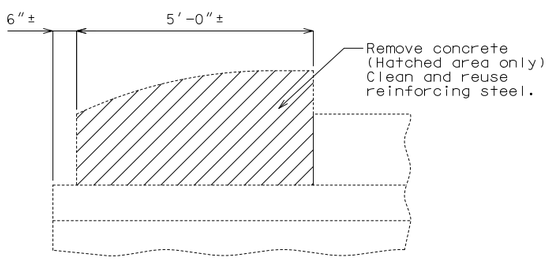


PART ELEVATION SHOWING END POST
CONCRETE REMOVAL

Note:

Cost of removing existing end posts will be considered completely covered by the contract unit price for Curb Blockout.

Notes:

All exposed edges of curb blockout shall have 1/2" radius or 3/8" bevel unless otherwise shown.

Payment for concrete, reinforcing steel, resin anchor systems, and any other work incidental to the curb blockout, complete in place, will be included in the contract unit price for Curb Blockout per linear foot.

Cost of any concrete curb or parapet repair will be included in the contract unit price for Curb Blockout.

All curb blockout reinforcement shall be epoxy coated.

The contractor shall use one of the qualified resin anchor systems in accordance with Sec 1039.

The minimum embedment depth in concrete with f'c = 4,000 psi for the resin anchor system shall be that required to meet the minimum ultimate pullout strength in accordance with Sec 1039 but shall not be less than 5".

An epoxy coated #5 Grade 60 reinforcing bar shall be substituted for the 5/8"Ø threaded rod.

For details of resin anchors, see Sheet No. 4.

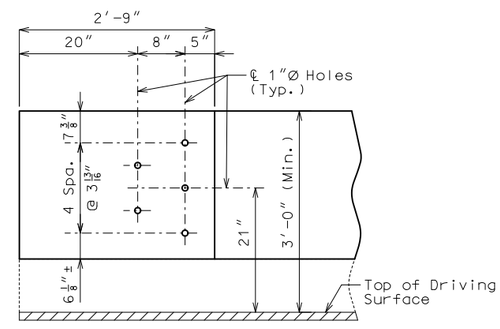


DETAILS OF GUARD RAIL
ATTACHMENT

# CURB BLOCKOUT AT END BENTS

Detailed Jan. 2020
Checked Jan. 2020

Note: This drawing is not to scale. Follow dimensions.



STATE OF MISSOURI
TRAVIS S. STUMP
NUMBER
PE-2010000870
PROFESSIONAL ENGINEER
THIS SHEET HAS BEEN SIGNED, SEALED AND DATED ELECTRONICALLY.

DATE PREPARED
2/18/2020

| ROUTE | STATE |
|---|---|
| 210 | MO |
| DISTRICT | SHEET NO. |
| BR | 5 |

COUNTY
CLAY

JOB NO.
J4P3266

CONTRACT ID.

PROJECT NO.

BRIDGE NO.
A21773

| DATE | DESCRIPTION |
|---|---|

MISSOURI HIGHWAYS AND TRANSPORTATION COMMISSION
105 WEST CAPITOL
JEFFERSON CITY, MO 65102
1-888-ASK-MODOT (1-888-275-6636)

IF A SEAL IS PRESENT ON THIS SHEET IT HAS BEEN ELECTRONICALLY SEALED AND DATED.

# BILL OF REINFORCING STEEL

| NO. REQ'D. | MARK NO. SIZE | MARK NO. MARK | LOCATION | EPOXY (E) | SHAPE NO. | STIRRUP (S) | SUBSTR. (X) | VARIES (V) | NO. EACH | B FT. | B IN. | C FT. | C IN. | D FT. | D IN. | E FT. | E IN. | F FT. | F IN. | H FT. | H IN. | K FT. | K IN. | NOMINAL LENGTH FT. | NOMINAL LENGTH IN. | ACTUAL LENGTH FT. | ACTUAL LENGTH IN. | WEIGHT LBS. |
|---|---|---|---|---|---|---|---|---|---|---|---|---|---|---|---|---|---|---|---|---|---|---|---|---|---|---|---|---|
| | | | BLOCKOUT | | | | | | | | | | | | | | | | | | | | | | | | | |
| 64 | 5 | R1 | BLOCKOUT | E | 10 | S | | | | | | 9.750 | 2 | 1.750 | | | | | | | | | | 3 | 9 | 3 | 7 | 239 |
| 64 | 5 | R2 | BLOCKOUT | E | 10 | S | | | | | | 13.500 | 2 | 1.750 | | | | | | | | | | 4 | 5 | 4 | 2 | 278 |
| 56 | 5 | R3 | BLOCKOUT | E | 20 | | | | | 5 | 3.000 | | | | | | | | | | | | | 5 | 3 | 5 | 3 | 307 |
| 16 | 5 | R4 | BLOCKOUT | E | 20 | | | | | 4 | 0.000 | | | | | | | | | | | | | 4 | 0 | 4 | 0 | 67 |
| 8 | 5 | R5 | BLOCKOUT | E | 20 | | | | | 49 | 0.000 | | | | | | | | | | | | | 49 | 0 | 49 | 0 | 409 |
| 32 | 5 | R6 | BLOCKOUT | E | 20 | | | | | 7 | 9.000 | | | | | | | | | | | | | 7 | 9 | 7 | 9 | 259 |
| 16 | 5 | R7 | BLOCKOUT | E | 20 | | | | | 51 | 9.000 | | | | | | | | | | | | | 51 | 9 | 51 | 9 | 864 |
| 16 | 5 | R8 | BLOCKOUT | E | 20 | | | | | 9 | 9.000 | | | | | | | | | | | | | 9 | 9 | 9 | 9 | 163 |
| 8 | 5 | R9 | BLOCKOUT | E | 20 | | | | | 35 | 0.000 | | | | | | | | | | | | | 35 | 0 | 35 | 0 | 292 |
| | | | TOTALS | | | | | | | | | | | | | | | | | | | | | | | | | |
| | 5 | | | E | | | | | | | | | | | | | | | | | | | | | | | | 2878 |
| | | | TOTAL | | | | | | | | | | | | | | | | | | | | | | | | | 0 |
| | | | TOTAL | E | | | | | | | | | | | | | | | | | | | | | | | | 2878 |
| | | | Slab on Girder | | | | | | | | | | | | | | | | | | | | | | | | | |
| | 5 | | | E | | | | | | | | | | | | | | | | | | | | | | | | 2878 |
| | | | TOTAL | | | | | | | | | | | | | | | | | | | | | | | | | 2878 |

# BILL OF REINFORCING STEEL

| NO. REQ'D. | MARK NO. SIZE | MARK NO. MARK | LOCATION | EPOXY (E) | SHAPE NO. | STIRRUP (S) | SUBSTR. (X) | VARIES (V) | NO. EACH | B FT. | B IN. | C FT. | C IN. | D FT. | D IN. | E FT. | E IN. | F FT. | F IN. | H FT. | H IN. | K FT. | K IN. | NOMINAL LENGTH FT. | NOMINAL LENGTH IN. | ACTUAL LENGTH FT. | ACTUAL LENGTH IN. | WEIGHT LBS. |
|---|---|---|---|---|---|---|---|---|---|---|---|---|---|---|---|---|---|---|---|---|---|---|---|---|---|---|---|---|

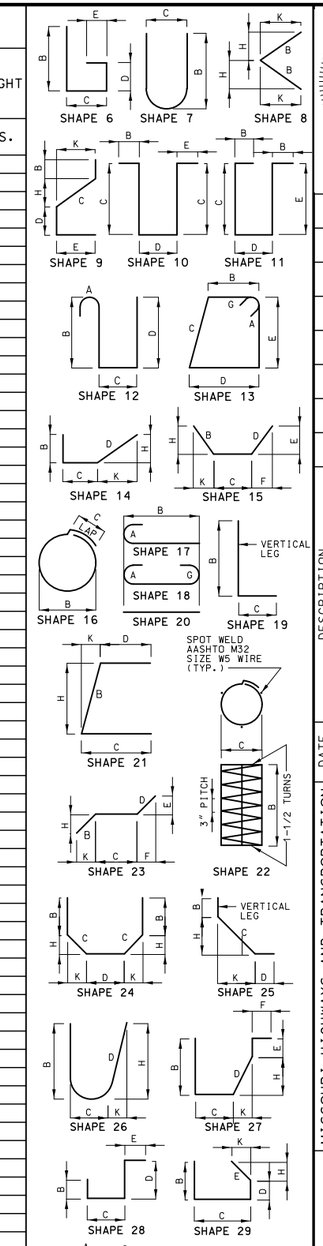


BENDING DIAGRAMS

STATE OF MISSOURI
TRAVIS S. STUMP
NUMBER PE-2010000870
PROFESSIONAL ENGINEER

THIS SHEET HAS BEEN SIGNED, SEALED AND DATED ELECTRONICALLY.

| | |
|---|---|
| DATE PREPARED | 2/18/2020 |
| ROUTE | 210 |
| STATE | MO |
| DISTRICT | BR |
| SHEET NO. | 6 |
| COUNTY | CLAY |
| JOB NO. | J4P3266 |
| CONTRACT ID. | |
| PROJECT NO. | |
| BRIDGE NO. | A21773 |

DESCRIPTION

DATE

IF A SEAL IS PRESENT ON THIS SHEET IT HAS BEEN ELECTRONICALLY SEALED AND DATED.

MISSOURI HIGHWAYS AND TRANSPORTATION COMMISSION
105 WEST CAPITOL
JEFFERSON CITY, MO 65102
1-888-ASK-MODOT (1-888-275-6636)

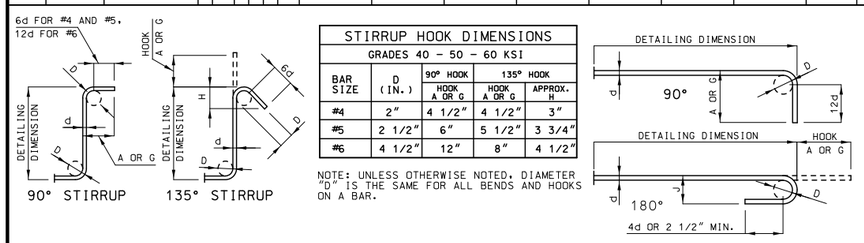


| STIRRUP HOOK DIMENSIONS | | | | |
|---|---|---|---|---|
| GRADES 40 - 50 - 60 KSI | | | | |
| BAR SIZE | D (IN.) | 90° HOOK | 135° HOOK | |
| | | HOOK A OR G | HOOK A OR G | APPROX. H |
| #4 | 2" | 4 1/2" | 4 1/2" | 3" |
| #5 | 2 1/2" | 6" | 5 1/2" | 3 3/4" |
| #6 | 4 1/2" | 12" | 8" | 4 1/2" |

NOTE: UNLESS OTHERWISE NOTED, DIAMETER "D" IS THE SAME FOR ALL BENDS AND HOOKS ON A BAR.

| END HOOK DIMENSIONS | | | | |
|---|---|---|---|---|
| BAR SIZE | D (IN.) | ALL GRADES | | |
| | | 180° HOOKS | | 90° HOOKS |
| | | A OR G | J | A OR G |
| #3 | 2 1/4" | 5" | 3" | 6" |
| #4 | 3" | 6" | 4" | 8" |
| #5 | 3 3/4" | 7" | 5" | 10" |
| #6 | 4 1/2" | 8" | 6" | 12" |
| #7 | 5 1/4" | 10" | 7" | 14" |
| #8 | 6" | 11" | 8" | 16" |
| #9 | 9 1/2" | 15" | 11 3/4" | 19" |
| #10 | 10 3/4" | 17" | 13 1/4" | 22" |
| #11 | 12" | 19" | 14 3/4" | 2'-0" |
| #14 | 18 1/4" | 2'-3" | 21 3/4" | 2'-7" |

**NOTE:**
ALL STANDARD HOOKS AND BENDS OTHER THAN 180 DEGREE ARE TO BE BENT WITH SAME PROCEDURE AS FOR 90 DEGREE STANDARD HOOKS.
HOOKS AND BENDS SHALL BE IN ACCORDANCE WITH THE PROCEDURES AS SHOWN ON THIS SHEET.
E = EPOXY COATED REINFORCEMENT.
S = STIRRUP.
X = BAR IS INCLUDED IN SUBSTRUCTURE QUANTITIES.
V = BAR DIMENSIONS VARY IN EQUAL INCREMENTS BETWEEN DIMENSIONS SHOWN ON THIS LINE AND THE FOLLOWING LINE.
NO. EA. = NUMBER OF BARS OF EACH LENGTH.
NOMINAL LENGTHS ARE BASED ON OUT TO OUT DIMENSIONS SHOWN IN BENDING DIAGRAMS AND ARE LISTED FOR FABRICATORS USE. (NEAREST INCH)
ACTUAL LENGTHS ARE MEASURED ALONG CENTERLINE BAR TO THE NEAREST INCH.
PAYWEIGHTS ARE BASED ON ACTUAL LENGTHS.
FOUR ANGLE OR CHANNEL SPACERS ARE REQUIRED FOR EACH COLUMN SPIRAL. SPACERS ARE TO BE PLACED ON INSIDE OF SPIRALS. LENGTH AND WEIGHT OF COLUMN SPIRALS DO NOT INCLUDE SPLICES OR SPACERS.
REINFORCING STEEL (GRADE 60) FY = 60,000 PSI.

Detailed Jan. 2020
Checked Jan. 2020

Note: This drawing is not to scale. Follow dimensions.

SEC/SUR 8 TWP 50N RGE 32W

# U.I.P. AND REHABILITATE EXISTING (56′-70′-70′-42′) CONTINUOUS CONCRETE VOIDED SLAB SPANS

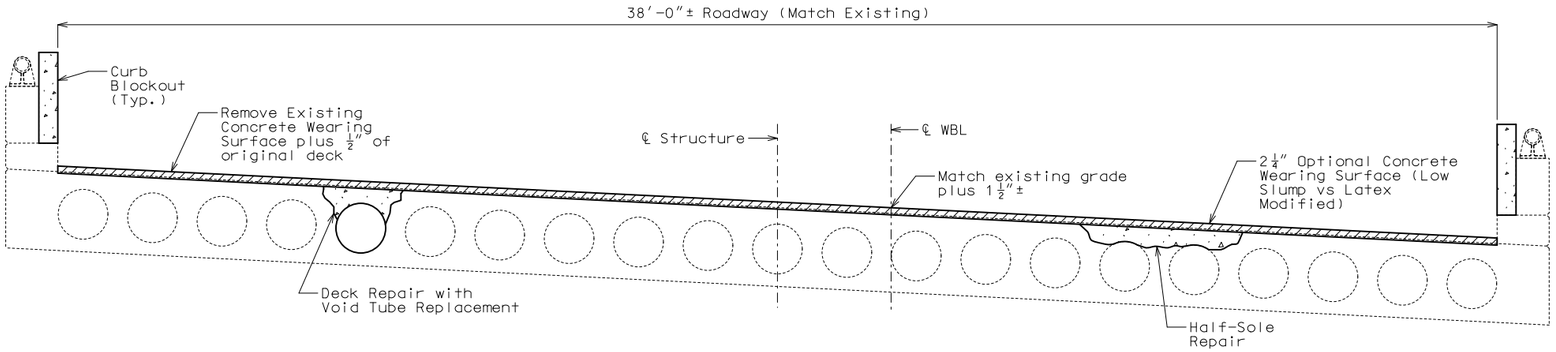


TYPICAL SECTION THRU EXISTING DECK

## Estimated Quantities

| Item | | Total |
|---|---|---|
| Removal of Concrete Wearing Surface | sq. foot | 9139 |
| Optional Concrete Wearing Surface | sq. yard | 1015 |
| Curb Blockout | linear foot | 509 |
| Half-Sole Repair | sq. foot | 900 |
| Deck Repair with Void Tube Replacement | sq. foot | 450 |
| | | |
| | | |
| | | |
| | | |
| | | |

## Optional Concrete Wearing Surface

| Type of Concrete Wearing Surface | Type Used (✓) |
|---|---|
| Low Slump Concrete Wearing Surface | |
| Latex Modified Concrete Wearing Surface | |

MoDOT construction personnel will complete column labeled "Type Used (✓)".

The contractor shall select one of the alternate concrete wearing surfaces listed in the table. The alternate concrete wearing surface method of measurement and basis of payment shall be in accordance with Sec 505.

## General Notes:

**Design Specifications:**

2002 AASTHO LFD (17th Ed.) Standard Specifications
Bridge Deck Rating = 5

**Design Loading:**

HS20-44 (1965 & New Construction)

**Design Unit Stresses:**

Class B-1 Concrete (Half-Sole and Deck Repair with Void Tube Replacement and Curb Blockout) f′c = 4,000 psi
Reinforcing Steel (Grade 60) fy = 60,000 psi

**Reinforcing Steel:**

Minimum clearance to reinforcing steel shall be 1 1/2″, unless otherwise shown.

**Joint Filler:**

All joint filler shall be in accordance with Sec 1057 for preformed sponge rubber expansion and partition joint filler, except as noted.

**Miscellaneous:**

Roadway surfacing adjacent to bridge ends shall match new bridge wearing surface (roadway item).

All concrete repairs shall be in accordance with Sec 704, unless otherwise noted.

Outline of old work is indicated by light dashed lines. Heavy lines indicate new work.

Contractor shall verify all dimensions if field before ordering new material.

In order to maintain grade and a minimum thickness of wearing surface as shown on plans it may be necessary to use additional quantities of wearing surface at various locations throughout the structure. The cost of furnishing and installing the wearing surface will be considered completely covered in the contract unit price, including all additional labor, materials or equipment for variations in thickness of wearing surface.

Bars bonded in old concrete not removed shall be cleanly stripped and embedded into new concrete where possible. If length is available, old bars shall extend into new concrete at least 40 diameters for plain bars and 30 diameters for deformed bars, unless otherwise noted.

**Traffic Handling:**

Maintain traffic on structure during construction. See Sheet No. 2 for staged construction details.

REPAIRS TO BRIDGE: ROUTE 210 WB
OVER N. BRIGHTON AVE. & BUCKEYE CREEK

ROUTE 210 WB FROM ROUTE I-435 TO ROUTE I-35
ABOUT 1.4 MILES WEST OF ROUTE I-435
STA. 114+90.20± (Match Existing)

STD. 617.10
STD. 617.20
STD. 706.35

Detailed Jan. 2020
Checked Jan. 2020

Note: This drawing is not to scale. Follow dimensions.



STATE OF MISSOURI
TRAVIS S. STUMP
NUMBER PE-2010000870
PROFESSIONAL ENGINEER
THIS SHEET HAS BEEN SIGNED, SEALED AND DATED ELECTRONICALLY.

DATE PREPARED 3/3/2020
ROUTE 210 | STATE MO
DISTRICT BR | SHEET NO. 1
COUNTY CLAY
JOB NO. J4P3266
CONTRACT ID.
PROJECT NO.
BRIDGE NO. A21774

| DATE | DESCRIPTION |
|---|---|
| | |

IF A SEAL IS PRESENT ON THIS SHEET IT HAS BEEN ELECTRONICALLY SEALED AND DATED.

MISSOURI HIGHWAYS AND TRANSPORTATION COMMISSION
105 WEST CAPITOL
JEFFERSON CITY, MO 65102
1-888-ASK-MODOT (1-888-275-6636)

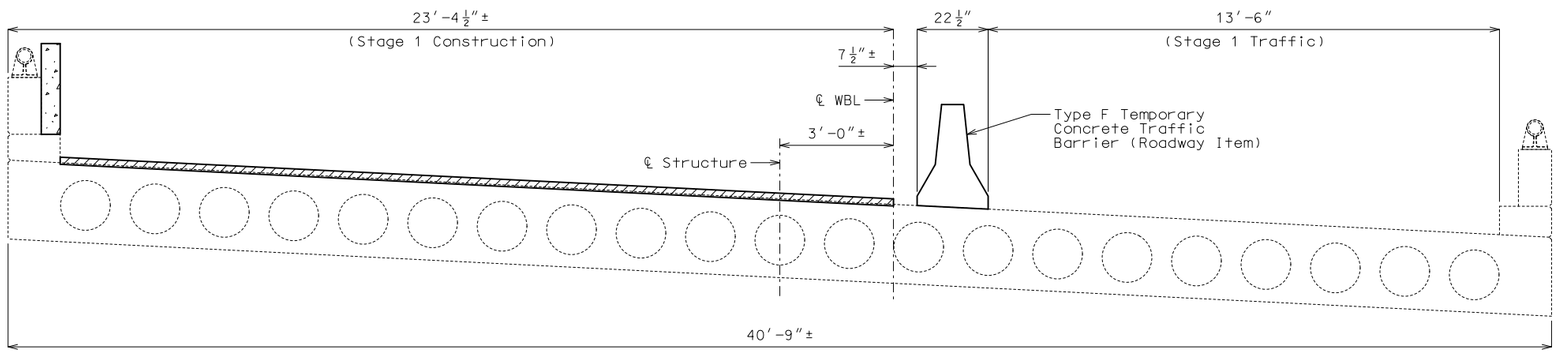


STAGE 1 CONSTRUCTION

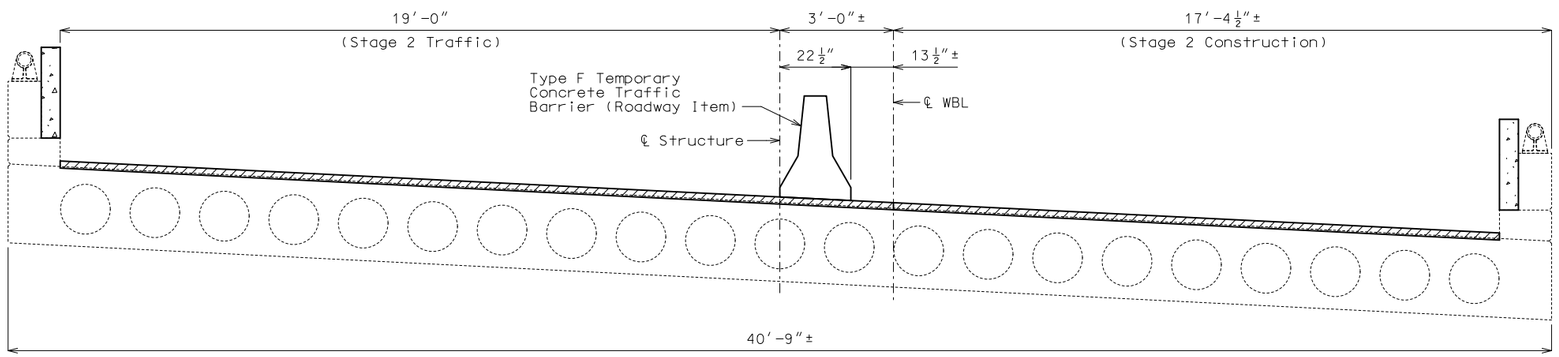


STAGE 2 CONSTRUCTION

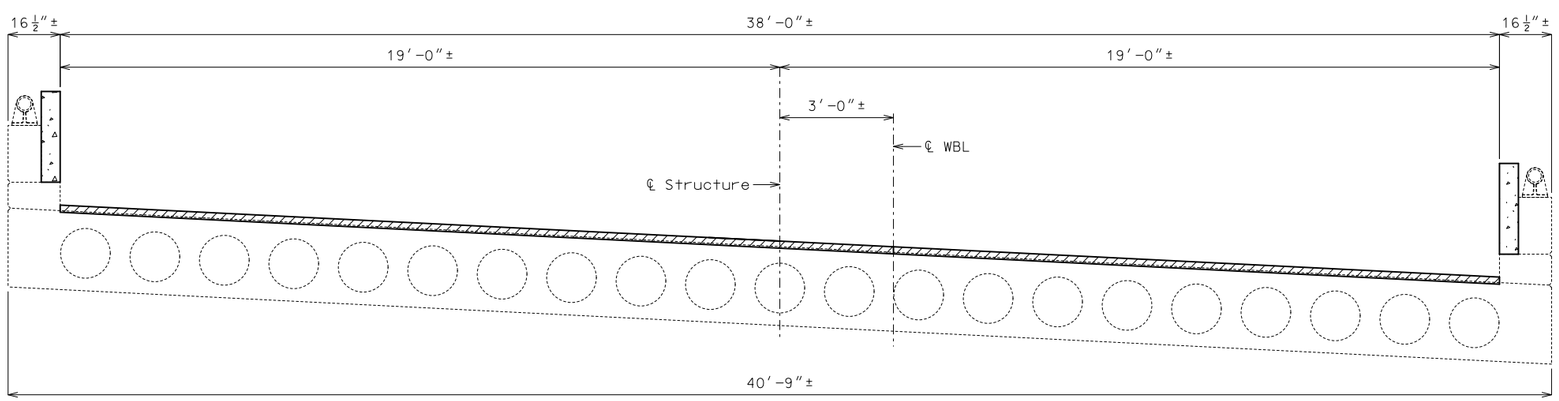


FINAL STAGE

℄ Median

Note:
Method of attachment for Type F Temporary Concrete Barrier shall be tie down strap.

# DETAILS SHOWING STAGED CONSTRUCTION

Detailed Jan. 2020
Checked Jan. 2020

Note: This drawing is not to scale. Follow dimensions.



STATE OF MISSOURI
TRAVIS S. STUMP
NUMBER
PE-2010000870
PROFESSIONAL ENGINEER

THIS SHEET HAS BEEN SIGNED, SEALED AND DATED ELECTRONICALLY.

| | |
|---|---|
| DATE PREPARED | 2/18/2020 |
| ROUTE | 210 |
| STATE | MO |
| DISTRICT | BR |
| SHEET NO. | 2 |
| COUNTY | CLAY |
| JOB NO. | J4P3266 |
| CONTRACT ID. | |
| PROJECT NO. | |
| BRIDGE NO. | A21774 |

| DATE | DESCRIPTION |
|---|---|
| | |

MISSOURI HIGHWAYS AND TRANSPORTATION COMMISSION
105 WEST CAPITOL
JEFFERSON CITY, MO 65102
1-888-ASK-MODOT (1-888-275-6636)

IF A SEAL IS PRESENT ON THIS SHEET IT HAS BEEN ELECTRONICALLY SEALED AND DATED.

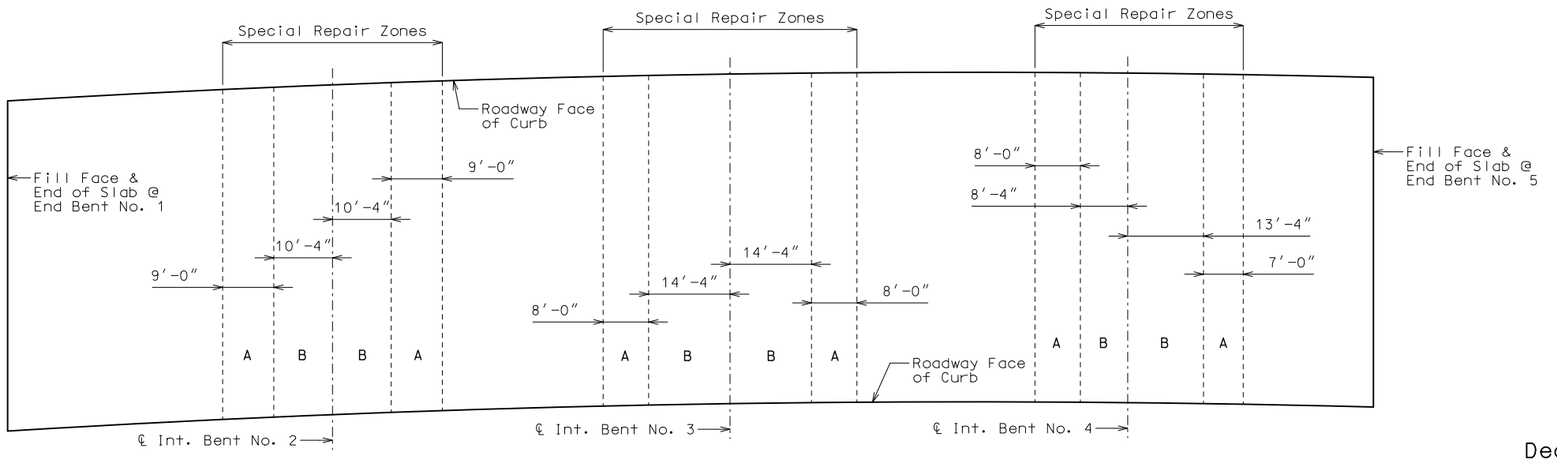


PLAN OF SLAB SHOWING SPECIAL REPAIR ZONES

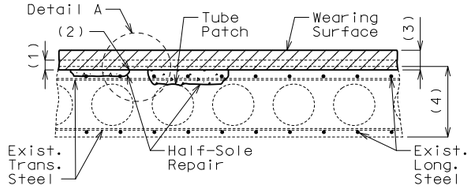


HALF-SOLE REPAIR

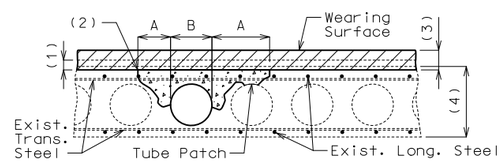


DECK REPAIR WITH VOID TUBE REPLACEMENT

A = Half-Sole Repair
B = Deck Repair with Void Tube Replacement

DECK REPAIR

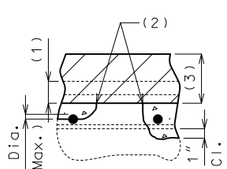


DETAIL A

Clearance around top bar and around bottom bar at the intersection of top bar shall be required when more than half the diameter of the top bar is exposed.

(1) Removal of existing 1/4"± epoxy polymer concrete overlay plus 1/2" of existing deck

(2) 1" vertical side shall be established outside the deteriorated area.

(3) 2 1/4" minimum optional concrete wearing surface

(4) Original depth

## Deck Repair Notes:

**Order of Repair:**

1. Remove existing wearing surface plus 1/2" of existing deck.
2. Sound deck to identify areas in need of repair.
3. Outside special repair zones, complete the following repairs:
   a. Half-Sole Repair
   b. Deck repair with void tube replacement
4. Inside special repair zones, complete the following repairs:
   a. Half-Sole Repair
   b. Deck repair with void tube replacement
5. Place new wearing surface.

**Special Repair Zones:**

Any deck repair in areas not designated as a special repair zone shall be completed prior to work in Zone A.

Deck repair required in the areas designated as special repair zones shall be completed in alphabetical sequence beginning with Zone A. Zones with the same letter designation may be repaired at the same time.

Removal and deck repair shall be completed in one special repair zone and concrete shall have attained a compressive strength of 3200 psi before work can be started in the next special repair zone.

If any single repair area does not exceed 4 square feet in size and the total repair area within a special repair zone does not exceed 12 square feet, the special repair zone may be repaired at the same time as an adjacent zone.

**Void Repair:**

Any damage sustained to the void tube as a result of the contractor's operations shall be patched or replaced as required by the engineer at the contractor's expense.

An exposed void in the deck shall be patched as approved by the engineer in a manner that shall maintain the void area completely free of concrete. Cost of patching an exposed void will be considered completely covered by the contract unit price for Half-Sole Repair.

When a deteriorated portion of the void tube is beyond the point of patching as determined by the engineer, the portion of the deteriorated void tube shall be replaced. The void area shall be maintained completely free of concrete. Cutting of the longitudinal reinforcing steel will not be permitted. The fiber tubes for producing the voids shall have an outside diameter with the wall thickness the same as the existing tubes and anchored at not more than the original spacing. Cost of replacing the void tube will be considered completely covered by the contract unit price for Deck Repair with Void Tube Replacement. Measurement will be horizontal projection of the area of exposed tube in plan.

# DECK REPAIR DETAILS

Detailed Jan. 2020
Checked Jan. 2020

Note: This drawing is not to scale. Follow dimensions.



STATE OF MISSOURI
TRAVIS S. STUMP
NUMBER PE-2010000870
PROFESSIONAL ENGINEER

THIS SHEET HAS BEEN SIGNED, SEALED AND DATED ELECTRONICALLY.

| | |
|---|---|
| DATE PREPARED 3/3/2020 | |
| ROUTE 210 | STATE MO |
| DISTRICT BR | SHEET NO. 3 |
| COUNTY CLAY | |
| JOB NO. J4P3266 | |
| CONTRACT ID. | |
| PROJECT NO. | |
| BRIDGE NO. A21774 | |

| DESCRIPTION | DATE |
|---|---|
| | |

MISSOURI HIGHWAYS AND TRANSPORTATION COMMISSION
105 WEST CAPITOL
JEFFERSON CITY, MO 65102
1-888-ASK-MODOT (1-888-275-6636)

IF A SEAL IS PRESENT ON THIS SHEET IT HAS BEEN ELECTRONICALLY SEALED AND DATED.

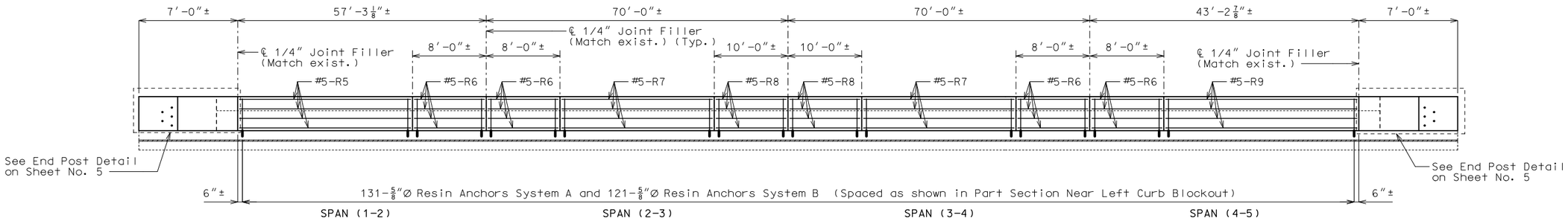


## SECTION NEAR LEFT CURB BLOCKOUT

(Right curb blockout similar)

Notes:

Longitudinal dimensions shown are along grade and are taken at top outside edge of parapet.

Bridge rail not shown for clarity.

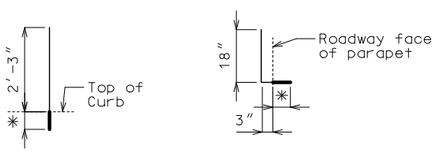


RESIN ANCHOR SYSTEM A
(302 req'd)
(Install in curb)

RESIN ANCHOR SYSTEM B
(242 req'd)
(Install in parapet)

* Use manufacturer's embedment length (5" minimum embedment).

## DETAILS OF RESIN ANCHORS

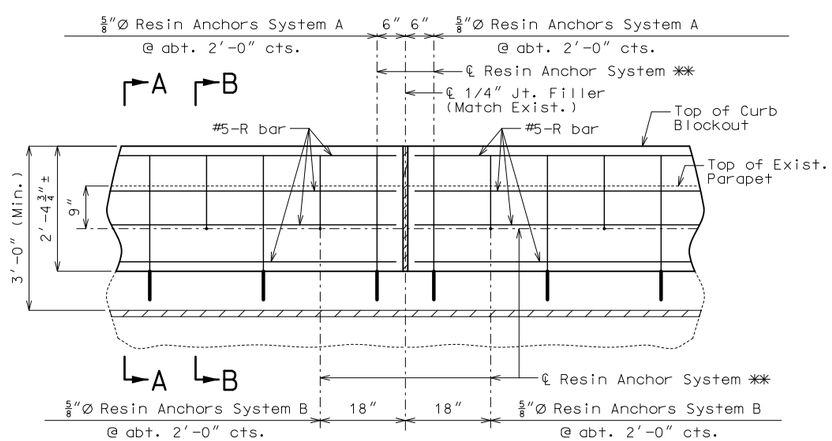


## PART SECTION NEAR CURB BLOCKOUT

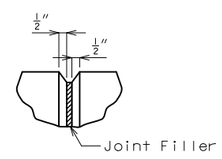


## FILLED JOINT DETAIL

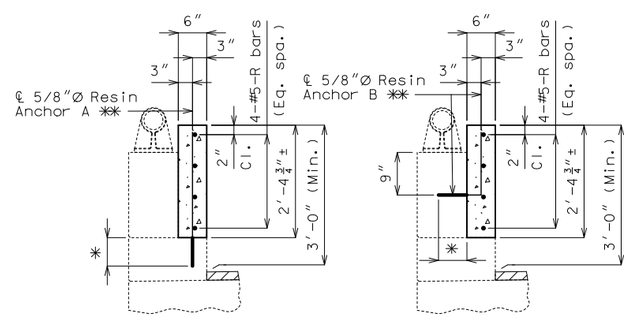


SECTION A-A

SECTION B-B

## CURB BLOCKOUT

Notes:

Concrete in curb blockout shall be Class B-1 with f'c = 4000 psi.

Measurement of curb blockout is to the nearest linear foot, measured at the top outside edge of parapet. (Match existing curb and parapet)

All exposed edges of curb blockout shall have 1/2" radius or 3/8" bevel unless otherwise shown.

Payment for concrete, reinforcing steel, resin anchor systems, and any other work incidental to the curb blockout, complete in place, will be included in the contract unit price for Curb Blockout per linear foot.

Cost of any concrete curb or parapet repair will be included in the contract unit price for Curb Blockout.

All curb blockout reinforcement shall be epoxy coated.

** Shift resin anchors where necessary to clear existing anchor bolts for bridge rail, miss curb outlets (if present) and clear existing reinforcement.

Use a minimum lap of 3'-1" for #5 horizontal curb blockout bars.

Concrete traffic barrier delineators shall be placed on top of the curb blockout similarly as shown on Missouri Standard Plans 617.10 and in accordance with Sec 617. Delineators on bridges with two-lane, two-way traffic shall have retroflective sheeting on both sides. Concrete traffic barrier delineators will be considered completely covered by the contract unit price for Curb Blockout.

The contractor shall use one of the qualified resin anchor systems in accordance with Sec 1039.

The minimum embedment depth in concrete with f'c = 4,000 psi for the resin anchor system shall be that required to meet the minimum ultimate pullout strength in accordance with Sec 1039 but shall not be less than 5 inches.

An epoxy coated #5 Grade 60 reinforcing bar shall be substituted for the 5/8"Ø threaded rod.

STATE OF MISSOURI
TRAVIS S. STUMP
NUMBER PE-2010000870
PROFESSIONAL ENGINEER

THIS SHEET HAS BEEN SIGNED, SEALED AND DATED ELECTRONICALLY.

| DATE PREPARED | |
|---|---|
| 2/18/2020 | |
| ROUTE 210 | STATE MO |
| DISTRICT BR | SHEET NO. 4 |
| COUNTY CLAY | |
| JOB NO. J4P3266 | |
| CONTRACT ID. | |
| PROJECT NO. | |
| BRIDGE NO. A21774 | |

| DATE | DESCRIPTION |
|---|---|
| | |

MISSOURI HIGHWAYS AND TRANSPORTATION COMMISSION
105 WEST CAPITOL
JEFFERSON CITY, MO 65102
1-888-ASK-MODOT (1-888-275-6636)

IF A SEAL IS PRESENT ON THIS SHEET IT HAS BEEN ELECTRONICALLY SEALED AND DATED.

Detailed Jan. 2020
Checked Jan. 2020

Note: This drawing is not to scale. Follow dimensions.

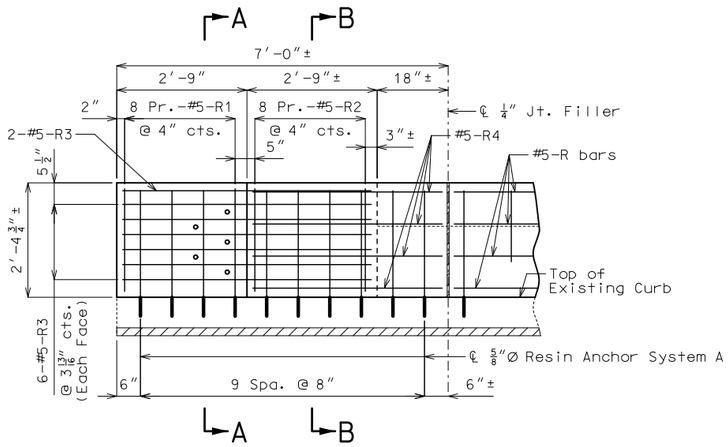


ELEVATION SHOWING LEFT END POST
AT EXISTING END BENT NO. 1
(Right End Post at End Bent No. 1 similar)

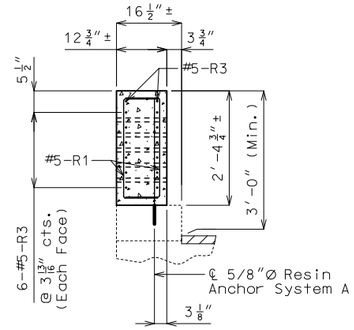


SECTION A-A

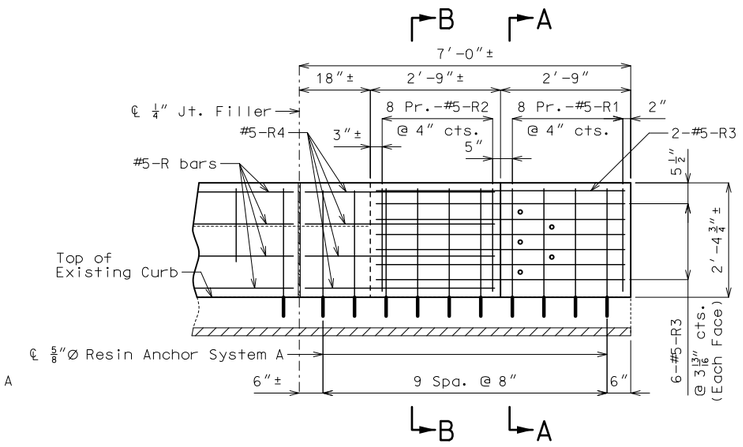


ELEVATION SHOWING LEFT END POST
AT EXISTING END BENT NO. 5
(Right End Post at End Bent No. 5 similar)

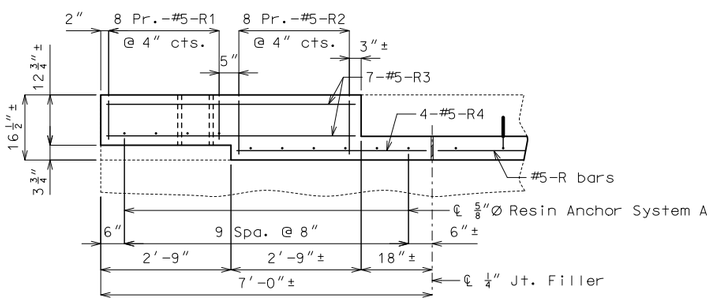


PLAN SHOWING LEFT END POST
AT EXISTING END BENT NO. 1

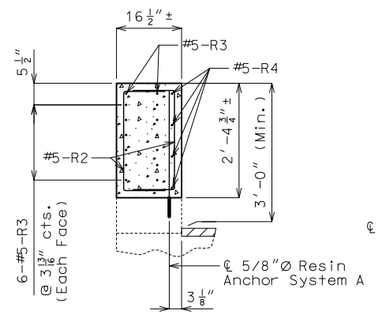


SECTION B-B

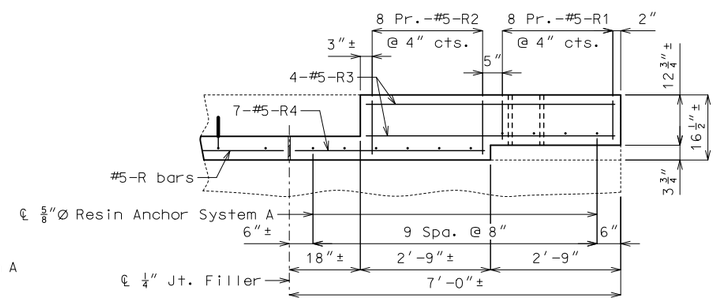


PLAN SHOWING LEFT END POST
AT EXISTING END BENT NO. 5

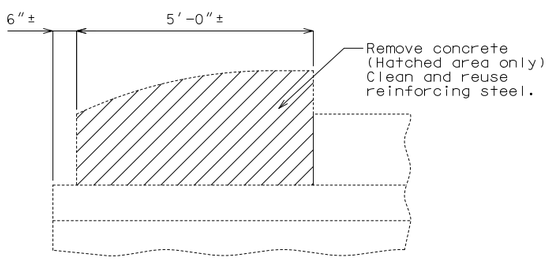


PART ELEVATION SHOWING END POST
CONCRETE REMOVAL

Note:

Cost of removing existing end posts will be considered completely covered by the contract unit price for Curb Blockout.

Notes:

All exposed edges of curb blockout shall have 1/2" radius or 3/8" bevel unless otherwise shown.

Payment for concrete, reinforcing steel, resin anchor systems, and any other work incidental to the curb blockout, complete in place, will be included in the contract unit price for Curb Blockout per linear foot.

Cost of any concrete curb or parapet repair will be included in the contract unit price for Curb Blockout.

All curb blockout reinforcement shall be epoxy coated.

The contractor shall use one of the qualified resin anchor systems in accordance with Sec 1039.

The minimum embedment depth in concrete with f'c = 4,000 psi for the resin anchor system shall be that required to meet the minimum ultimate pullout strength in accordance with Sec 1039 but shall not be less than 5".

An epoxy coated #5 Grade 60 reinforcing bar shall be substituted for the 5/8"Ø threaded rod.

For details of resin anchors, see Sheet No. 4.

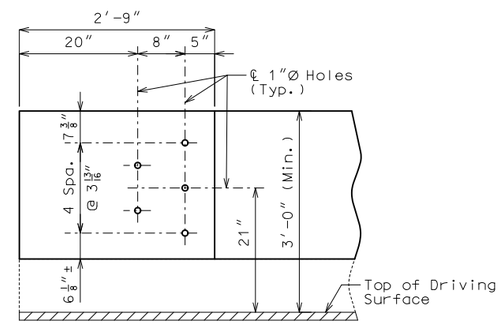


DETAILS OF GUARD RAIL
ATTACHMENT

# CURB BLOCKOUT AT END BENTS

Detailed Jan. 2020
Checked Jan. 2020

Note: This drawing is not to scale. Follow dimensions.



STATE OF MISSOURI
TRAVIS S. STUMP
NUMBER
PE-2010000870
PROFESSIONAL ENGINEER

THIS SHEET HAS BEEN SIGNED, SEALED AND DATED ELECTRONICALLY.

DATE PREPARED
2/18/2020

| ROUTE | STATE |
|---|---|
| 210 | MO |
| DISTRICT | SHEET NO. |
| BR | 5 |

COUNTY
CLAY

JOB NO.
J4P3266

CONTRACT ID.

PROJECT NO.

BRIDGE NO.
A21774

| DATE | DESCRIPTION |
|---|---|

MISSOURI HIGHWAYS AND TRANSPORTATION COMMISSION
105 WEST CAPITOL
JEFFERSON CITY, MO 65102
1-888-ASK-MODOT (1-888-275-6636)

IF A SEAL IS PRESENT ON THIS SHEET IT HAS BEEN ELECTRONICALLY SEALED AND DATED.

# BILL OF REINFORCING STEEL

| NO. REQ'D. | MARK NO. SIZE | MARK NO. MARK | LOCATION | EPOXY (E) | SHAPE NO. | STIRRUP (S) | SUBSTR. (X) | VARIES (V) | NO. EACH | B FT. IN. | C FT. IN. | D FT. IN. | E FT. IN. | F FT. IN. | H FT. IN. | K FT. IN. | NOMINAL LENGTH FT. IN. | ACTUAL LENGTH FT. IN. | WEIGHT LBS. |
|---|---|---|---|---|---|---|---|---|---|---|---|---|---|---|---|---|---|---|---|
| | | | BLOCKOUT | | | | | | | | | | | | | | | | |
| 64 | 5 | R1 | BLOCKOUT | E | 10 | S | | | | | 9.750 | 2 1.750 | | | | | 3 9 | 3 7 | 239 |
| 64 | 5 | R2 | BLOCKOUT | E | 10 | S | | | | | 13.500 | 2 1.750 | | | | | 4 5 | 4 2 | 278 |
| 56 | 5 | R3 | BLOCKOUT | E | 20 | | | | | 5 3.000 | | | | | | | 5 3 | 5 3 | 307 |
| 16 | 5 | R4 | BLOCKOUT | E | 20 | | | | | 4 0.000 | | | | | | | 4 0 | 4 0 | 67 |
| 8 | 5 | R5 | BLOCKOUT | E | 20 | | | | | 49 0.000 | | | | | | | 49 0 | 49 0 | 409 |
| 32 | 5 | R6 | BLOCKOUT | E | 20 | | | | | 7 9.000 | | | | | | | 7 9 | 7 9 | 259 |
| 16 | 5 | R7 | BLOCKOUT | E | 20 | | | | | 51 9.000 | | | | | | | 51 9 | 51 9 | 864 |
| 16 | 5 | R8 | BLOCKOUT | E | 20 | | | | | 9 9.000 | | | | | | | 9 9 | 9 9 | 163 |
| 8 | 5 | R9 | BLOCKOUT | E | 20 | | | | | 35 0.000 | | | | | | | 35 0 | 35 0 | 292 |
| | | | TOTALS | | | | | | | | | | | | | | | | |
| | 5 | | | E | | | | | | | | | | | | | | | 2878 |
| | | | TOTAL | | | | | | | | | | | | | | | | 0 |
| | | | TOTAL | E | | | | | | | | | | | | | | | 2878 |
| | | | Slab on Girder | | | | | | | | | | | | | | | | |
| | 5 | | | E | | | | | | | | | | | | | | | 2878 |
| | | | TOTAL | | | | | | | | | | | | | | | | 2878 |

# BILL OF REINFORCING STEEL

| NO. REQ'D. | MARK NO. SIZE | MARK NO. MARK | LOCATION | EPOXY (E) | SHAPE NO. | STIRRUP (S) | SUBSTR. (X) | VARIES (V) | NO. EACH | B FT. IN. | C FT. IN. | D FT. IN. | E FT. IN. | F FT. IN. | H FT. IN. | K FT. IN. | NOMINAL LENGTH FT. IN. | ACTUAL LENGTH FT. IN. | WEIGHT LBS. |
|---|---|---|---|---|---|---|---|---|---|---|---|---|---|---|---|---|---|---|---|

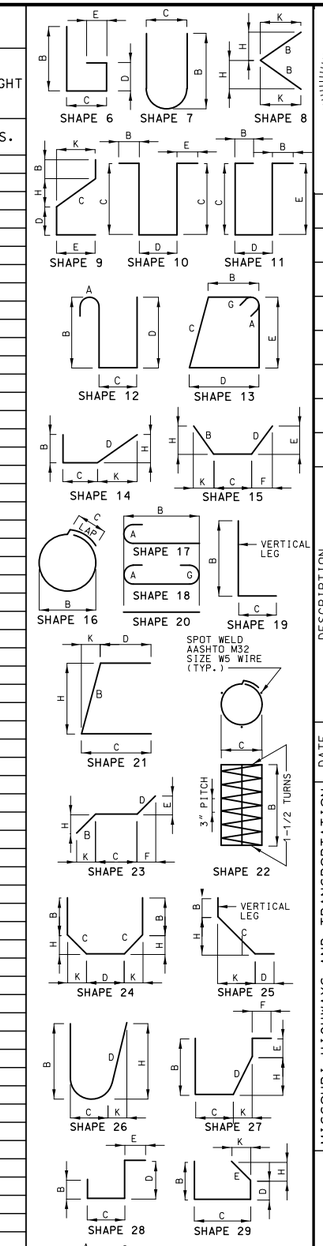


BENDING DIAGRAMS

STATE OF MISSOURI
TRAVIS S. STUMP
NUMBER PE-2010000870
PROFESSIONAL ENGINEER

THIS SHEET HAS BEEN SIGNED, SEALED AND DATED ELECTRONICALLY.

| | |
|---|---|
| DATE PREPARED | 2/18/2020 |
| ROUTE 210 | STATE MO |
| DISTRICT BR | SHEET NO. 6 |
| COUNTY | CLAY |
| JOB NO. | J4P3266 |
| CONTRACT ID. | |
| PROJECT NO. | |
| BRIDGE NO. | A21774 |

DESCRIPTION

DATE

IF A SEAL IS PRESENT ON THIS SHEET IT HAS BEEN ELECTRONICALLY SEALED AND DATED.

MISSOURI HIGHWAYS AND TRANSPORTATION COMMISSION

105 WEST CAPITOL
JEFFERSON CITY, MO 65102
1-888-ASK-MODOT (1-888-275-6636)

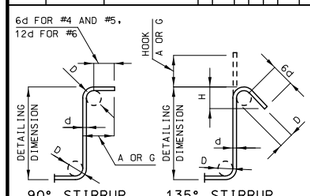


| STIRRUP HOOK DIMENSIONS | | | | |
|---|---|---|---|---|
| GRADES 40 - 50 - 60 KSI | | | | |
| BAR SIZE | D (IN.) | 90° HOOK: HOOK A OR G | 135° HOOK: HOOK A OR G | 135° HOOK: APPROX. H |
| #4 | 2" | 4 1/2" | 4 1/2" | 3" |
| #5 | 2 1/2" | 6" | 5 1/2" | 3 3/4" |
| #6 | 4 1/2" | 12" | 8" | 4 1/2" |

NOTE: UNLESS OTHERWISE NOTED, DIAMETER "D" IS THE SAME FOR ALL BENDS AND HOOKS ON A BAR.

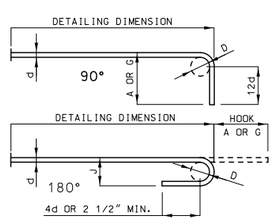


| END HOOK DIMENSIONS | | | | |
|---|---|---|---|---|
| BAR SIZE | D (IN.) | ALL GRADES: 180° HOOKS: A OR G | ALL GRADES: 180° HOOKS: J | ALL GRADES: 90° HOOKS: A OR G |
| #3 | 2 1/4" | 5" | 3" | 6" |
| #4 | 3" | 6" | 4" | 8" |
| #5 | 3 3/4" | 7" | 5" | 10" |
| #6 | 4 1/2" | 8" | 6" | 12" |
| #7 | 5 1/4" | 10" | 7" | 14" |
| #8 | 6" | 11" | 8" | 16" |
| #9 | 9 1/2" | 15" | 11 3/4" | 19" |
| #10 | 10 3/4" | 17" | 13 1/4" | 22" |
| #11 | 12" | 19" | 14 3/4" | 2'-0" |
| #14 | 18 1/4" | 2'-3" | 21 3/4" | 2'-7" |

**NOTE:**
ALL STANDARD HOOKS AND BENDS OTHER THAN 180 DEGREE ARE TO BE BENT WITH SAME PROCEDURE AS FOR 90 DEGREE STANDARD HOOKS.
HOOKS AND BENDS SHALL BE IN ACCORDANCE WITH THE PROCEDURES AS SHOWN ON THIS SHEET.
E = EPOXY COATED REINFORCEMENT.
S = STIRRUP.
X = BAR IS INCLUDED IN SUBSTRUCTURE QUANTITIES.
V = BAR DIMENSIONS VARY IN EQUAL INCREMENTS BETWEEN DIMENSIONS SHOWN ON THIS LINE AND THE FOLLOWING LINE.
NO. EA. = NUMBER OF BARS OF EACH LENGTH.
NOMINAL LENGTHS ARE BASED ON OUT TO OUT DIMENSIONS SHOWN IN BENDING DIAGRAMS AND ARE LISTED FOR FABRICATORS USE. (NEAREST INCH)
ACTUAL LENGTHS ARE MEASURED ALONG CENTERLINE BAR TO THE NEAREST INCH.
PAYWEIGHTS ARE BASED ON ACTUAL LENGTHS.
FOUR ANGLE OR CHANNEL SPACERS ARE REQUIRED FOR EACH COLUMN SPIRAL. SPACERS ARE TO BE PLACED ON INSIDE OF SPIRALS. LENGTH AND WEIGHT OF COLUMN SPIRALS DO NOT INCLUDE SPLICES OR SPACERS.
REINFORCING STEEL (GRADE 60) FY = 60,000 PSI.

Detailed Jan. 2020
Checked Jan. 2020

Note: This drawing is not to scale. Follow dimensions.

SEC/SUR 8 TWP 50N RGE 32W

# U.I.P. AND REHABILITATE EXISTING (39′-56′-39′) CONTINUOUS CONCRETE VOIDED SLAB SPANS

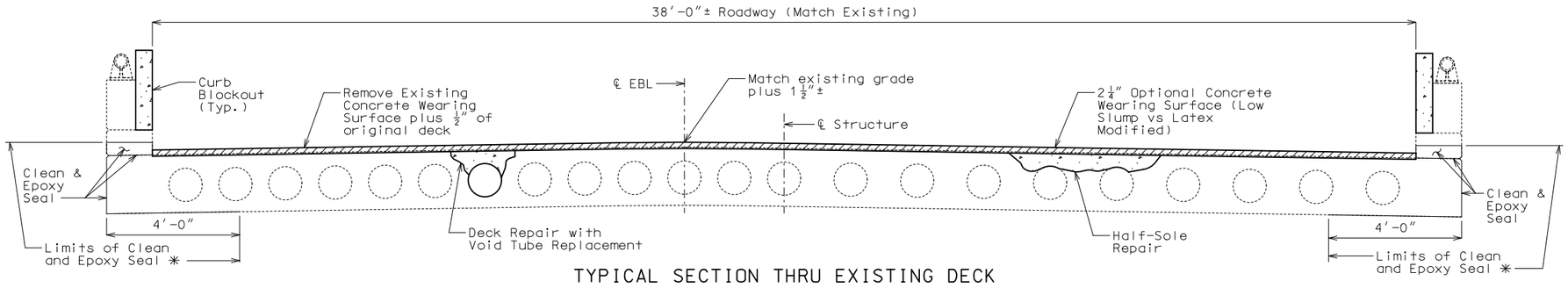


TYPICAL SECTION THRU EXISTING DECK

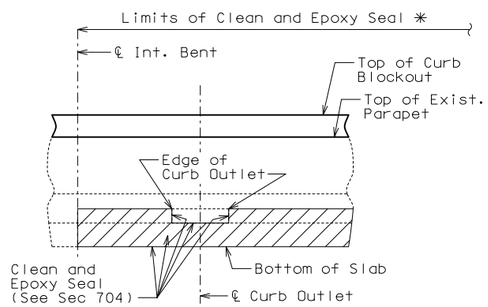


✳ Limits for Clean and Epoxy Seal shall be from ℄ Int. Bent to front face of End Bent for Spans No. (1-2) & (3-4).

PART ELEVATION SHOWING CLEAN AND EPOXY SEAL LIMITS

## Estimated Quantities

| Item | | Total |
|---|---|---|
| Removal of Concrete Wearing Surface | sq. foot | 5187 |
| Optional Concrete Wearing Surface | sq. yard | 576 |
| Curb Blockout | linear foot | 301 |
| Half-Sole Repair | sq. foot | 500 |
| Deck Repair with Void Tube Replacement | sq. foot | 250 |
| Clean and Epoxy Seal | sq. foot | 990 |
| | | |
| | | |
| | | |
| | | |

## Optional Concrete Wearing Surface

| Type of Concrete Wearing Surface | Type Used (✓) |
|---|---|
| Low Slump Concrete Wearing Surface | |
| Latex Modified Concrete Wearing Surface | |

MoDOT construction personnel will complete column labeled "Type Used (✓)".

The contractor shall select one of the alternate concrete wearing surfaces listed in the table. The alternate concrete wearing surface method of measurement and basis of payment shall be in accordance with Sec 505.

## General Notes:

**Design Specifications:**

2002 AASTHO LFD (17th Ed.) Standard Specifications
Bridge Deck Rating = 5

**Design Loading:**

HS20-44 (1965 & New Construction)

**Design Unit Stresses:**

Class B-1 Concrete (Half-Sole and Deck Repair with Void Tube Replacement and Curb Blockout) f′c = 4,000 psi
Reinforcing Steel (Grade 60) fy = 60,000 psi

**Reinforcing Steel:**

Minimum clearance to reinforcing steel shall be 1 1/2″, unless otherwise shown.

**Joint Filler:**

All joint filler shall be in accordance with Sec 1057 for preformed sponge rubber expansion and partition joint filler, except as noted.

**Miscellaneous:**

Roadway surfacing adjacent to bridge ends shall match new bridge wearing surface (roadway item).

All concrete repairs shall be in accordance with Sec 704, unless otherwise noted.

Outline of old work is indicated by light dashed lines. Heavy lines indicate new work.

Contractor shall verify all dimensions if field before ordering new material.

In order to maintain grade and a minimum thickness of wearing surface as shown on plans it may be necessary to use additional quantities of wearing surface at various locations throughout the structure. The cost of furnishing and installing the wearing surface will be considered completely covered in the contract unit price, including all additional labor, materials or equipment for variations in thickness of wearing surface.

Bars bonded in old concrete not removed shall be cleanly stripped and embedded into new concrete where possible. If length is available, old bars shall extend into new concrete at least 40 diameters for plain bars and 30 diameters for deformed bars, unless otherwise noted.

**Traffic Handling:**

Maintain traffic on structure during construction. See Sheet No. 2 for staged construction details.

REPAIRS TO BRIDGE: ROUTE 210 EB OVER SEARCY CREEK PARKWAY

ROUTE 210 EB FROM ROUTE I-35 TO ROUTE I-435
ABOUT 1.1 MILES WEST OF ROUTE I-435
STA. 129+75.40± (Match Existing)

STD. 617.10
STD. 617.20
STD. 706.35

Detailed Jan. 2020
Checked Jan. 2020

Note: This drawing is not to scale. Follow dimensions.



STATE OF MISSOURI
TRAVIS S. STUMP
NUMBER PE-2010000870
PROFESSIONAL ENGINEER
THIS SHEET HAS BEEN SIGNED, SEALED AND DATED ELECTRONICALLY.

DATE PREPARED 3/3/2020
ROUTE 210 | STATE MO
DISTRICT BR | SHEET NO. 1
COUNTY CLAY
JOB NO. J4P3266
CONTRACT ID.
PROJECT NO.
BRIDGE NO. A21813

DESCRIPTION | DATE

MISSOURI HIGHWAYS AND TRANSPORTATION COMMISSION
105 WEST CAPITOL
JEFFERSON CITY, MO 65102
1-888-ASK-MODOT (1-888-275-6636)

IF A SEAL IS PRESENT ON THIS SHEET IT HAS BEEN ELECTRONICALLY SEALED AND DATED.

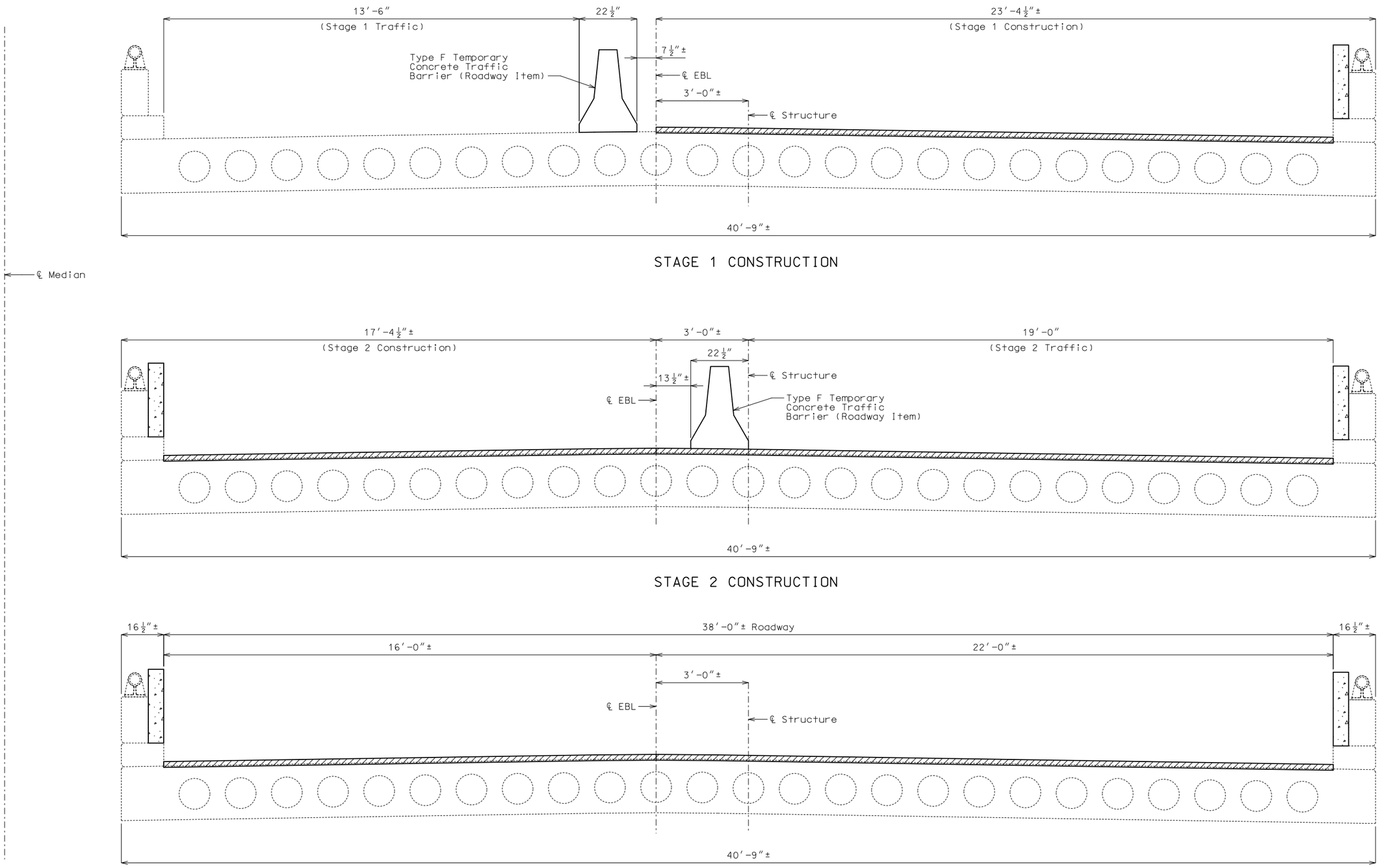


# DETAILS SHOWING STAGED CONSTRUCTION

Note:
Method of attachment for Type F Temporary Concrete Barrier shall be tie down strap.

Detailed Jan. 2020
Checked Jan. 2020

Note: This drawing is not to scale. Follow dimensions.



STATE OF MISSOURI
TRAVIS S. STUMP
NUMBER PE-2010000870
PROFESSIONAL ENGINEER

THIS SHEET HAS BEEN SIGNED, SEALED AND DATED ELECTRONICALLY.

| | |
|---|---|
| DATE PREPARED | 2/18/2020 |
| ROUTE | 210 |
| STATE | MO |
| DISTRICT | BR |
| SHEET NO. | 2 |
| COUNTY | CLAY |
| JOB NO. | J4P3266 |
| CONTRACT ID. | |
| PROJECT NO. | |
| BRIDGE NO. | A21813 |

| DATE | DESCRIPTION |
|---|---|

MISSOURI HIGHWAYS AND TRANSPORTATION COMMISSION
105 WEST CAPITOL
JEFFERSON CITY, MO 65102
1-888-ASK-MODOT (1-888-275-6636)

IF A SEAL IS PRESENT ON THIS SHEET IT HAS BEEN ELECTRONICALLY SEALED AND DATED.

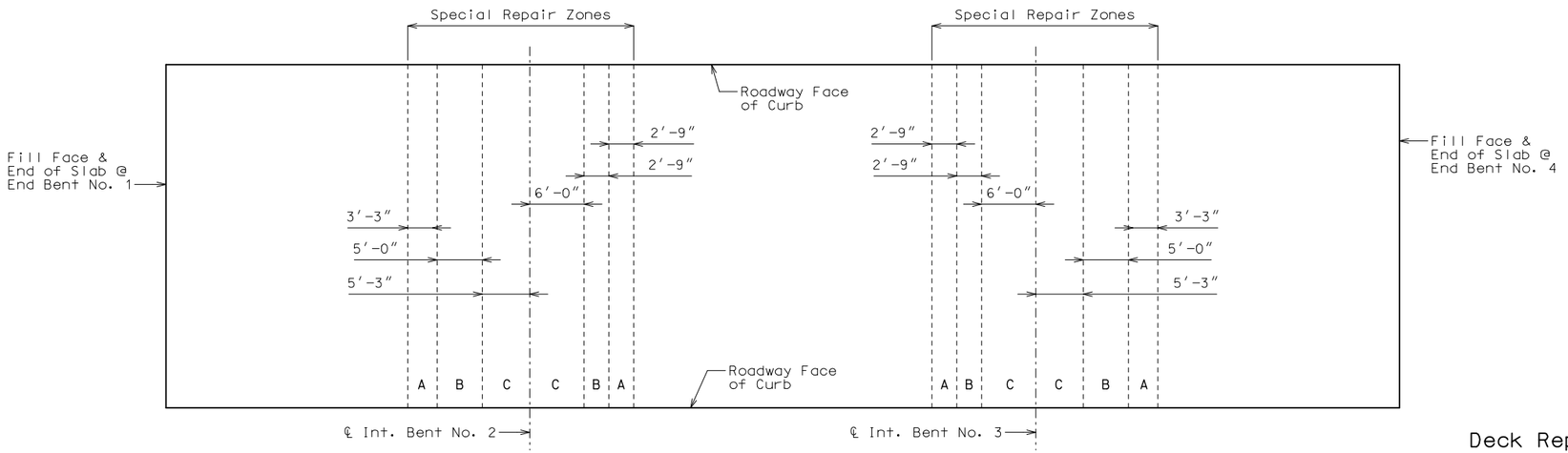


PLAN OF SLAB SHOWING SPECIAL REPAIR ZONES

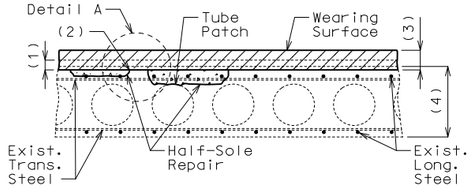


HALF-SOLE REPAIR

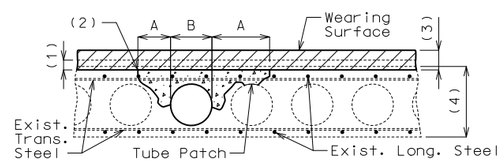


DECK REPAIR WITH VOID TUBE REPLACEMENT

A = Half-Sole Repair
B = Deck Repair with Void Tube Replacement

DECK REPAIR

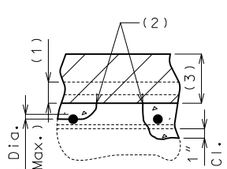


DETAIL A

Clearance around top bar and around bottom bar at the intersection of top bar shall be required when more than half the diameter of the top bar is exposed.

(1) Removal of existing 1/4"± epoxy polymer concrete overlay plus 1/2" of existing deck

(2) 1" vertical side shall be established outside the deteriorated area.

(3) 2 1/4" minimum optional concrete wearing surface

(4) Original depth

## Deck Repair Notes:

**Order of Repair:**

1. Remove existing wearing surface plus 1/2" of existing deck.
2. Sound deck to identify areas in need of repair.
3. Outside special repair zones, complete the following repairs:
   a. Half-Sole Repair
   b. Deck repair with void tube replacement
4. Inside special repair zones, complete the following repairs:
   a. Half-Sole Repair
   b. Deck repair with void tube replacement
5. Place new wearing surface.

**Special Repair Zones:**

Any deck repair in areas not designated as a special repair zone shall be completed prior to work in Zone A.

Deck repair required in the areas designated as special repair zones shall be completed in alphabetical sequence beginning with Zone A. Zones with the same letter designation may be repaired at the same time.

Removal and deck repair shall be completed in one special repair zone and concrete shall have attained a compressive strength of 3200 psi before work can be started in the next special repair zone.

If any single repair area does not exceed 4 square feet in size and the total repair area within a special repair zone does not exceed 12 square feet, the special repair zone may be repaired at the same time as an adjacent zone.

**Void Repair:**

Any damage sustained to the void tube as a result of the contractor's operations shall be patched or replaced as required by the engineer at the contractor's expense.

An exposed void in the deck shall be patched as approved by the engineer in a manner that shall maintain the void area completely free of concrete. Cost of patching an exposed void will be considered completely covered by the contract unit price for Half-Sole Repair.

When a deteriorated portion of the void tube is beyond the point of patching as determined by the engineer, the portion of the deteriorated void tube shall be replaced. The void area shall be maintained completely free of concrete. Cutting of the longitudinal reinforcing steel will not be permitted. The fiber tubes for producing the voids shall have an outside diameter with the wall thickness the same as the existing tubes and anchored at not more than the original spacing. Cost of replacing the void tube will be considered completely covered by the contract unit price for Deck Repair with Void Tube Replacement. Measurement will be horizontal projection of the area of exposed tube in plan.

# DECK REPAIR DETAILS

Detailed Jan. 2020
Checked Jan. 2020

Note: This drawing is not to scale. Follow dimensions.



STATE OF MISSOURI
TRAVIS S. STUMP
NUMBER PE-2010000870
PROFESSIONAL ENGINEER

THIS SHEET HAS BEEN SIGNED, SEALED AND DATED ELECTRONICALLY.

| | |
|---|---|
| DATE PREPARED | 3/3/2020 |
| ROUTE | 210 |
| STATE | MO |
| DISTRICT | BR |
| SHEET NO. | 3 |
| COUNTY | CLAY |
| JOB NO. | J4P3266 |
| CONTRACT ID. | |
| PROJECT NO. | |
| BRIDGE NO. | A21813 |

| DATE | DESCRIPTION |
|---|---|

MISSOURI HIGHWAYS AND TRANSPORTATION COMMISSION
105 WEST CAPITOL
JEFFERSON CITY, MO 65102
1-888-ASK-MODOT (1-888-275-6636)

IF A SEAL IS PRESENT ON THIS SHEET IT HAS BEEN ELECTRONICALLY SEALED AND DATED.

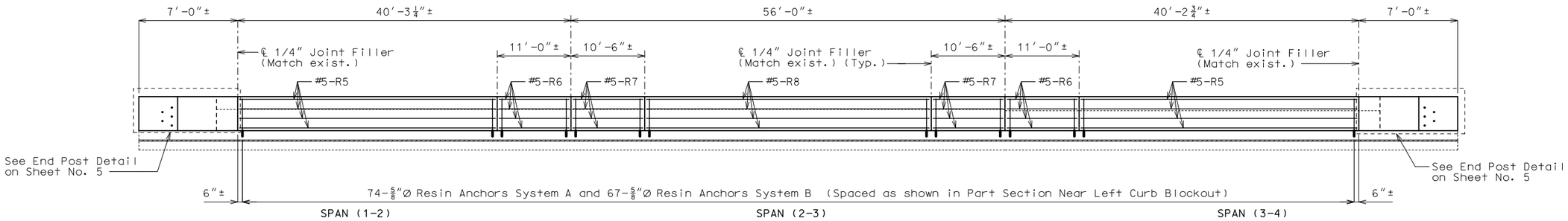


## SECTION NEAR LEFT CURB BLOCKOUT

(Right curb blockout similar)

Notes:

Longitudinal dimensions shown are along grade and are taken at top outside edge of parapet.

Bridge rail not shown for clarity.

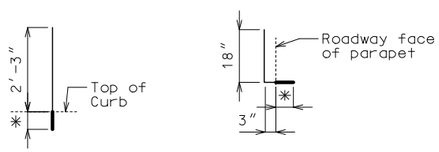


RESIN ANCHOR SYSTEM A
(188 req'd)
(Install in curb)

RESIN ANCHOR SYSTEM B
(134 req'd)
(Install in parapet)

* Use manufacturer's embedment length (5" minimum embedment).

## DETAILS OF RESIN ANCHORS

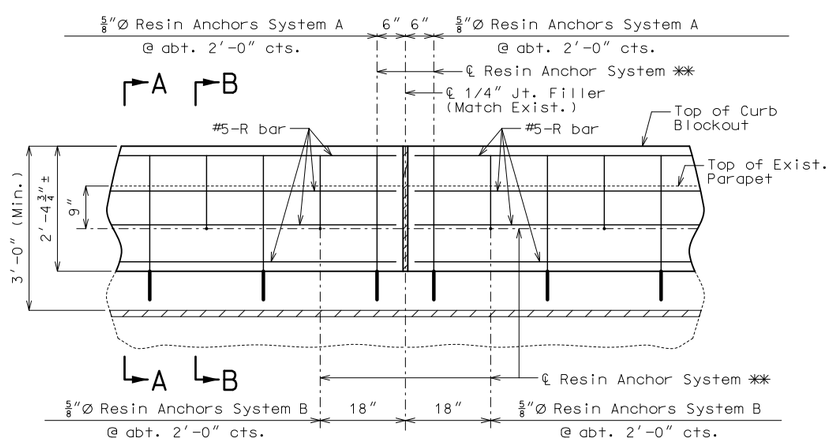


## PART SECTION NEAR CURB BLOCKOUT

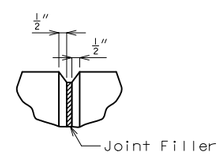


## FILLED JOINT DETAIL

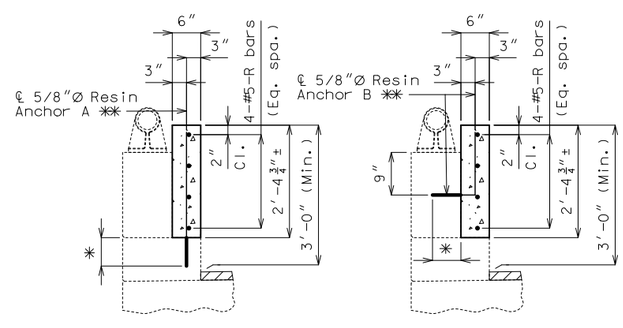


SECTION A-A

SECTION B-B

## CURB BLOCKOUT

Notes:

Concrete in curb blockout shall be Class B-1 with f'c = 4000 psi.

Measurement of curb blockout is to the nearest linear foot, measured at the top outside edge of parapet. (Match existing curb and parapet)

All exposed edges of curb blockout shall have 1/2" radius or 3/8" bevel unless otherwise shown.

Payment for concrete, reinforcing steel, resin anchor systems, and any other work incidental to the curb blockout, complete in place, will be included in the contract unit price for Curb Blockout per linear foot.

Cost of any concrete curb or parapet repair will be included in the contract unit price for Curb Blockout.

All curb blockout reinforcement shall be epoxy coated.

** Shift resin anchors where necessary to clear existing anchor bolts for bridge rail, miss curb outlets (if present) and clear existing reinforcement.

Use a minimum lap of 3'-1" for #5 horizontal curb blockout bars.

Concrete traffic barrier delineators shall be placed on top of the curb blockout similarly as shown on Missouri Standard Plans 617.10 and in accordance with Sec 617. Delineators on bridges with two-lane, two-way traffic shall have retroflective sheeting on both sides. Concrete traffic barrier delineators will be considered completely covered by the contract unit price for Curb Blockout.

The contractor shall use one of the qualified resin anchor systems in accordance with Sec 1039.

The minimum embedment depth in concrete with f'c = 4,000 psi for the resin anchor system shall be that required to meet the minimum ultimate pullout strength in accordance with Sec 1039 but shall not be less than 5 inches.

An epoxy coated #5 Grade 60 reinforcing bar shall be substituted for the 5/8"Ø threaded rod.

STATE OF MISSOURI
TRAVIS S. STUMP
NUMBER PE-2010000870
PROFESSIONAL ENGINEER

THIS SHEET HAS BEEN SIGNED, SEALED AND DATED ELECTRONICALLY.

| DATE PREPARED | |
|---|---|
| 2/18/2020 | |
| ROUTE 210 | STATE MO |
| DISTRICT BR | SHEET NO. 4 |
| COUNTY CLAY | |
| JOB NO. J4P3266 | |
| CONTRACT ID. | |
| PROJECT NO. | |
| BRIDGE NO. A21813 | |

| DATE | DESCRIPTION |
|---|---|
| | |

MISSOURI HIGHWAYS AND TRANSPORTATION COMMISSION
105 WEST CAPITOL
JEFFERSON CITY, MO 65102
1-888-ASK-MODOT (1-888-275-6636)

IF A SEAL IS PRESENT ON THIS SHEET IT HAS BEEN ELECTRONICALLY SEALED AND DATED.

Detailed Jan. 2020
Checked Jan. 2020

Note: This drawing is not to scale. Follow dimensions.

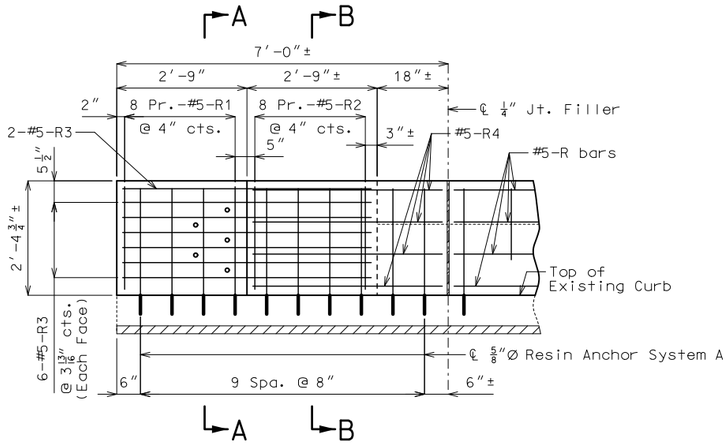


ELEVATION SHOWING LEFT END POST
AT EXISTING END BENT NO. 1
(Right End Post at End Bent No. 1 similar)

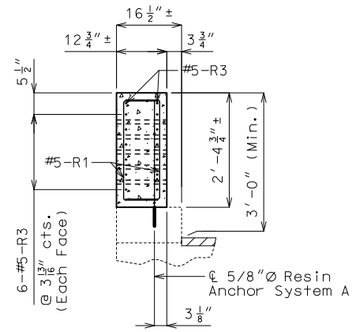


SECTION A-A

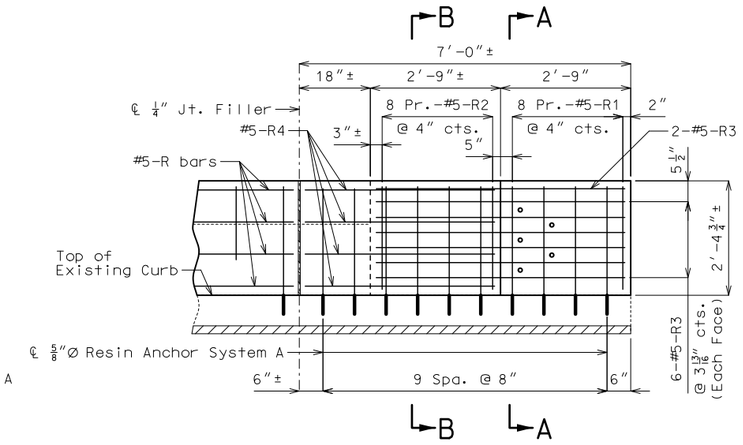


ELEVATION SHOWING LEFT END POST
AT EXISTING END BENT NO. 4
(Right End Post at End Bent No. 4 similar)

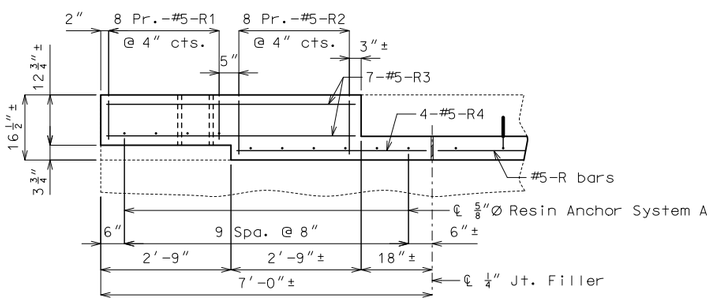


PLAN SHOWING LEFT END POST
AT EXISTING END BENT NO. 1

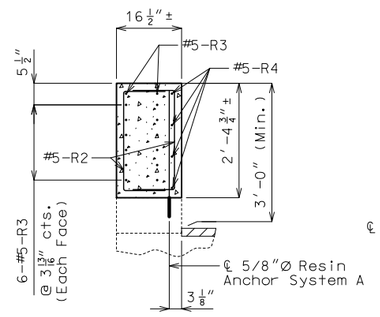


SECTION B-B

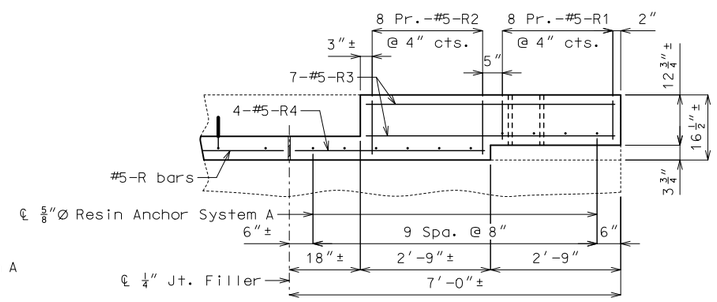


PLAN SHOWING LEFT END POST
AT EXISTING END BENT NO. 4

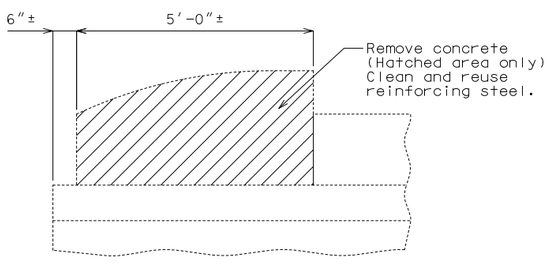


PART ELEVATION SHOWING END POST
CONCRETE REMOVAL

Note:

Cost of removing existing end posts will be considered completely covered by the contract unit price for Curb Blockout.

Notes:

All exposed edges of curb blockout shall have 1/2" radius or 3/8" bevel unless otherwise shown.

Payment for concrete, reinforcing steel, resin anchor systems, and any other work incidental to the curb blockout, complete in place, will be included in the contract unit price for Curb Blockout per linear foot.

Cost of any concrete curb or parapet repair will be included in the contract unit price for Curb Blockout.

All curb blockout reinforcement shall be epoxy coated.

The contractor shall use one of the qualified resin anchor systems in accordance with Sec 1039.

The minimum embedment depth in concrete with f'c = 4,000 psi for the resin anchor system shall be that required to meet the minimum ultimate pullout strength in accordance with Sec 1039 but shall not be less than 5".

An epoxy coated #5 Grade 60 reinforcing bar shall be substituted for the 5/8"Ø threaded rod.

For details of resin anchors, see Sheet No. 4.

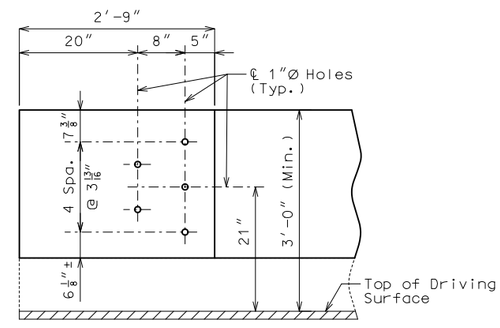


DETAILS OF GUARD RAIL
ATTACHMENT

# CURB BLOCKOUT AT END BENTS

Detailed Jan. 2020
Checked Jan. 2020

Note: This drawing is not to scale. Follow dimensions.



STATE OF MISSOURI
TRAVIS S. STUMP
NUMBER
PE-2010000870
PROFESSIONAL ENGINEER
THIS SHEET HAS BEEN SIGNED, SEALED AND DATED ELECTRONICALLY.

DATE PREPARED
2/18/2020

| ROUTE | STATE |
|---|---|
| 210 | MO |
| DISTRICT | SHEET NO. |
| BR | 5 |

COUNTY
CLAY

JOB NO.
J4P3266

CONTRACT ID.

PROJECT NO.

BRIDGE NO.
A21813

| DATE | DESCRIPTION |
|---|---|

MISSOURI HIGHWAYS AND TRANSPORTATION COMMISSION
105 WEST CAPITOL
JEFFERSON CITY, MO 65102
1-888-ASK-MODOT (1-888-275-6636)

IF A SEAL IS PRESENT ON THIS SHEET IT HAS BEEN ELECTRONICALLY SEALED AND DATED.

# BILL OF REINFORCING STEEL

| NO. REQ'D. | MARK NO. SIZE | MARK NO. MARK | LOCATION | EPOXY (E) | SHAPE NO. | STIRRUP (S) | SUBSTR. (X) | VARIES (V) | NO. EACH | B FT. IN. | C FT. IN. | D FT. IN. | E FT. IN. | F FT. IN. | H FT. IN. | K FT. IN. | NOMINAL LENGTH FT. IN. | ACTUAL LENGTH FT. IN. | WEIGHT LBS. |
|---|---|---|---|---|---|---|---|---|---|---|---|---|---|---|---|---|---|---|---|
| | | | BLOCKOUT | | | | | | | | | | | | | | | | |
| 64 | 5 | R1 | BLOCKOUT | E | 10 | S | | | | | 9.750 | 2 1.750 | | | | | 3 9 | 3 7 | 239 |
| 64 | 5 | R2 | BLOCKOUT | E | 10 | S | | | | | 13.500 | 2 1.750 | | | | | 4 5 | 4 2 | 278 |
| 56 | 5 | R3 | BLOCKOUT | E | 20 | | | | | 5 3.000 | | | | | | | 5 3 | 5 3 | 307 |
| 16 | 5 | R4 | BLOCKOUT | E | 20 | | | | | 4 0.000 | | | | | | | 4 0 | 4 0 | 67 |
| 16 | 5 | R5 | BLOCKOUT | E | 20 | | | | | 29 0.000 | | | | | | | 29 0 | 29 0 | 484 |
| 16 | 5 | R6 | BLOCKOUT | E | 20 | | | | | 10 9.000 | | | | | | | 10 9 | 10 9 | 179 |
| 16 | 5 | R7 | BLOCKOUT | E | 20 | | | | | 10 3.000 | | | | | | | 10 3 | 10 3 | 171 |
| 8 | 5 | R8 | BLOCKOUT | E | 20 | | | | | 34 9.000 | | | | | | | 34 9 | 34 9 | 290 |
| | | | TOTALS | | | | | | | | | | | | | | | | |
| | 5 | | | E | | | | | | | | | | | | | | | 2015 |
| | | | TOTAL | | | | | | | | | | | | | | | | 0 |
| | | | TOTAL | E | | | | | | | | | | | | | | | 2015 |
| | | | Slab on Girder | | | | | | | | | | | | | | | | |
| | 5 | | | E | | | | | | | | | | | | | | | 2015 |
| | | | TOTAL | | | | | | | | | | | | | | | | 2015 |

# BILL OF REINFORCING STEEL

| NO. REQ'D. | MARK NO. SIZE | MARK NO. MARK | LOCATION | EPOXY (E) | SHAPE NO. | STIRRUP (S) | SUBSTR. (X) | VARIES (V) | NO. EACH | B FT. IN. | C FT. IN. | D FT. IN. | E FT. IN. | F FT. IN. | H FT. IN. | K FT. IN. | NOMINAL LENGTH FT. IN. | ACTUAL LENGTH FT. IN. | WEIGHT LBS. |
|---|---|---|---|---|---|---|---|---|---|---|---|---|---|---|---|---|---|---|---|

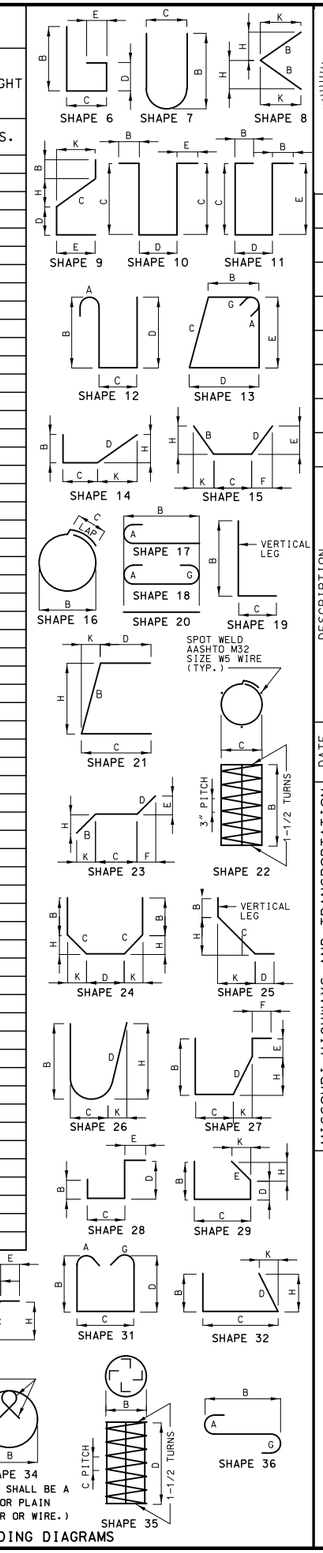


BENDING DIAGRAMS

STATE OF MISSOURI
TRAVIS S. STUMP
NUMBER PE-2010000870
PROFESSIONAL ENGINEER

THIS SHEET HAS BEEN SIGNED, SEALED AND DATED ELECTRONICALLY.

| | |
|---|---|
| DATE PREPARED | 2/18/2020 |
| ROUTE 210 | STATE MO |
| DISTRICT BR | SHEET NO. 6 |
| COUNTY | CLAY |
| JOB NO. | J4P3266 |
| CONTRACT ID. | |
| PROJECT NO. | |
| BRIDGE NO. | A21813 |

DESCRIPTION

DATE

IF A SEAL IS PRESENT ON THIS SHEET IT HAS BEEN ELECTRONICALLY SEALED AND DATED.

MISSOURI HIGHWAYS AND TRANSPORTATION COMMISSION

105 WEST CAPITOL
JEFFERSON CITY, MO 65102
1-888-ASK-MODOT (1-888-275-6636)

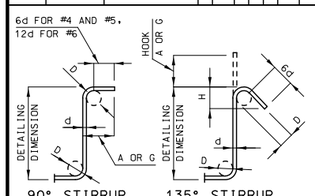


| STIRRUP HOOK DIMENSIONS | | | | |
|---|---|---|---|---|
| GRADES 40 - 50 - 60 KSI | | | | |
| BAR SIZE | D (IN.) | 90° HOOK | 135° HOOK | |
| | | HOOK A OR G | HOOK A OR G | APPROX. H |
| #4 | 2" | 4 1/2" | 4 1/2" | 3" |
| #5 | 2 1/2" | 6" | 5 1/2" | 3 3/4" |
| #6 | 4 1/2" | 12" | 8" | 4 1/2" |

NOTE: UNLESS OTHERWISE NOTED, DIAMETER "D" IS THE SAME FOR ALL BENDS AND HOOKS ON A BAR.

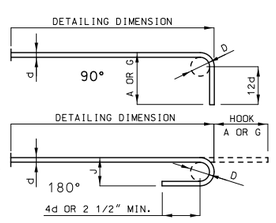


| END HOOK DIMENSIONS | | | | |
|---|---|---|---|---|
| BAR SIZE | D (IN.) | ALL GRADES | | |
| | | 180° HOOKS | | 90° HOOKS |
| | | A OR G | J | A OR G |
| #3 | 2 1/4" | 5" | 3" | 6" |
| #4 | 3" | 6" | 4" | 8" |
| #5 | 3 3/4" | 7" | 5" | 10" |
| #6 | 4 1/2" | 8" | 6" | 12" |
| #7 | 5 1/4" | 10" | 7" | 14" |
| #8 | 6" | 11" | 8" | 16" |
| #9 | 9 1/2" | 15" | 11 3/4" | 19" |
| #10 | 10 3/4" | 17" | 13 1/4" | 22" |
| #11 | 12" | 19" | 14 3/4" | 2'-0" |
| #14 | 18 1/4" | 2'-3" | 21 3/4" | 2'-7" |

**NOTE:**
ALL STANDARD HOOKS AND BENDS OTHER THAN 180 DEGREE ARE TO BE BENT WITH SAME PROCEDURE AS FOR 90 DEGREE STANDARD HOOKS.
HOOKS AND BENDS SHALL BE IN ACCORDANCE WITH THE PROCEDURES AS SHOWN ON THIS SHEET.
E = EPOXY COATED REINFORCEMENT.
S = STIRRUP.
X = BAR IS INCLUDED IN SUBSTRUCTURE QUANTITIES.
V = BAR DIMENSIONS VARY IN EQUAL INCREMENTS BETWEEN DIMENSIONS SHOWN ON THIS LINE AND THE FOLLOWING LINE.
NO. EA. = NUMBER OF BARS OF EACH LENGTH.
NOMINAL LENGTHS ARE BASED ON OUT TO OUT DIMENSIONS SHOWN IN BENDING DIAGRAMS AND ARE LISTED FOR FABRICATORS USE. (NEAREST INCH)
ACTUAL LENGTHS ARE MEASURED ALONG CENTERLINE BAR TO THE NEAREST INCH.
PAYWEIGHTS ARE BASED ON ACTUAL LENGTHS.
FOUR ANGLE OR CHANNEL SPACERS ARE REQUIRED FOR EACH COLUMN SPIRAL. SPACERS ARE TO BE PLACED ON INSIDE OF SPIRALS. LENGTH AND WEIGHT OF COLUMN SPIRALS DO NOT INCLUDE SPLICES OR SPACERS.
REINFORCING STEEL (GRADE 60) FY = 60,000 PSI.

Detailed Jan. 2020
Checked Jan. 2020

Note: This drawing is not to scale. Follow dimensions.

SEC/SUR 8 TWP 50N RGE 32W

# U.I.P. AND REHABILITATE EXISTING (39′-56′-39′) CONTINUOUS CONCRETE VOIDED SLAB SPANS

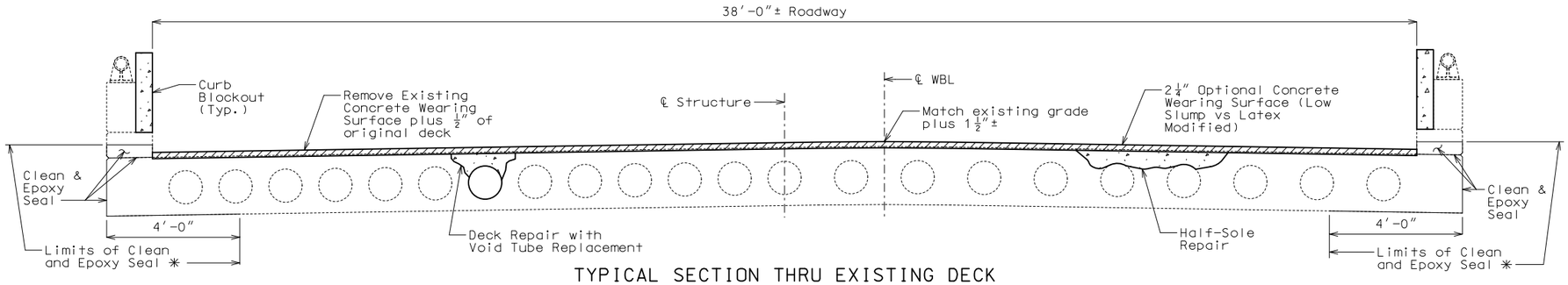


TYPICAL SECTION THRU EXISTING DECK

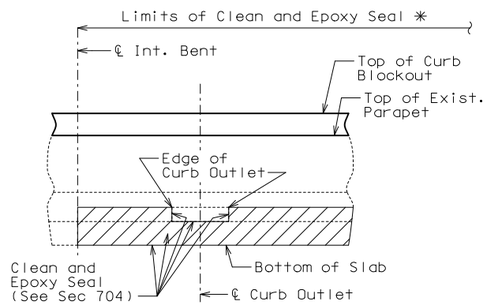


✳ Limits for Clean and Epoxy Seal shall be from ℄ Int. Bent to front face of End Bent for Spans No. (1-2) & (3-4).

PART ELEVATION SHOWING CLEAN AND EPOXY SEAL LIMITS

## Estimated Quantities

| Item | | Total |
|---|---|---|
| Removal of Concrete Wearing Surface | sq. foot | 5187 |
| Optional Concrete Wearing Surface | sq. yard | 576 |
| Curb Blockout | linear foot | 301 |
| Half-Sole Repair | sq. foot | 500 |
| Deck Repair with Void Tube Replacement | sq. foot | 250 |
| Clean and Epoxy Seal | sq. foot | 990 |
| | | |
| | | |
| | | |
| | | |

## Optional Concrete Wearing Surface

| Type of Concrete Wearing Surface | Type Used (✓) |
|---|---|
| Low Slump Concrete Wearing Surface | |
| Latex Modified Concrete Wearing Surface | |

MoDOT construction personnel will complete column labeled "Type Used (✓)".

The contractor shall select one of the alternate concrete wearing surfaces listed in the table. The alternate concrete wearing surface method of measurement and basis of payment shall be in accordance with Sec 505.

## General Notes:

**Design Specifications:**

2002 AASTHO LFD (17th Ed.) Standard Specifications
Bridge Deck Rating = 5

**Design Loading:**

HS20-44 (1965 & New Construction)

**Design Unit Stresses:**

Class B-1 Concrete (Half-Sole and Deck Repair with Void Tube Replacement and Curb Blockout) f′c = 4,000 psi
Reinforcing Steel (Grade 60) fy = 60,000 psi

**Reinforcing Steel:**

Minimum clearance to reinforcing steel shall be 1 1/2″, unless otherwise shown.

**Joint Filler:**

All joint filler shall be in accordance with Sec 1057 for preformed sponge rubber expansion and partition joint filler, except as noted.

**Miscellaneous:**

Roadway surfacing adjacent to bridge ends shall match new bridge wearing surface (roadway item).

All concrete repairs shall be in accordance with Sec 704, unless otherwise noted.

Outline of old work is indicated by light dashed lines. Heavy lines indicate new work.

Contractor shall verify all dimensions if field before ordering new material.

In order to maintain grade and a minimum thickness of wearing surface as shown on plans it may be necessary to use additional quantities of wearing surface at various locations throughout the structure. The cost of furnishing and installing the wearing surface will be considered completely covered in the contract unit price, including all additional labor, materials or equipment for variations in thickness of wearing surface.

Bars bonded in old concrete not removed shall be cleanly stripped and embedded into new concrete where possible. If length is available, old bars shall extend into new concrete at least 40 diameters for plain bars and 30 diameters for deformed bars, unless otherwise noted.

**Traffic Handling:**

Maintain traffic on structure during construction. See Sheet No. 2 for staged construction details.

REPAIRS TO BRIDGE: ROUTE 210 WB
OVER SEARCY CREEK PARKWAY

ROUTE 210 WB FROM ROUTE I-435 TO ROUTE I-35
ABOUT 1.1 MILES WEST OF ROUTE I-435
STA. 129+70.40± (Match Existing)

STD. 617.10
STD. 617.20
STD. 706.35

Detailed Jan. 2020
Checked Jan. 2020

Note: This drawing is not to scale. Follow dimensions.



STATE OF MISSOURI
TRAVIS S. STUMP
NUMBER PE-2010000870
PROFESSIONAL ENGINEER
THIS SHEET HAS BEEN SIGNED, SEALED AND DATED ELECTRONICALLY.

DATE PREPARED 3/3/2020
ROUTE 210 | STATE MO
DISTRICT BR | SHEET NO. 1
COUNTY CLAY
JOB NO. J4P3266
CONTRACT ID.
PROJECT NO.
BRIDGE NO. A21814

DESCRIPTION | DATE

MISSOURI HIGHWAYS AND TRANSPORTATION COMMISSION
105 WEST CAPITOL
JEFFERSON CITY, MO 65102
1-888-ASK-MODOT (1-888-275-6636)

IF A SEAL IS PRESENT ON THIS SHEET IT HAS BEEN ELECTRONICALLY SEALED AND DATED.

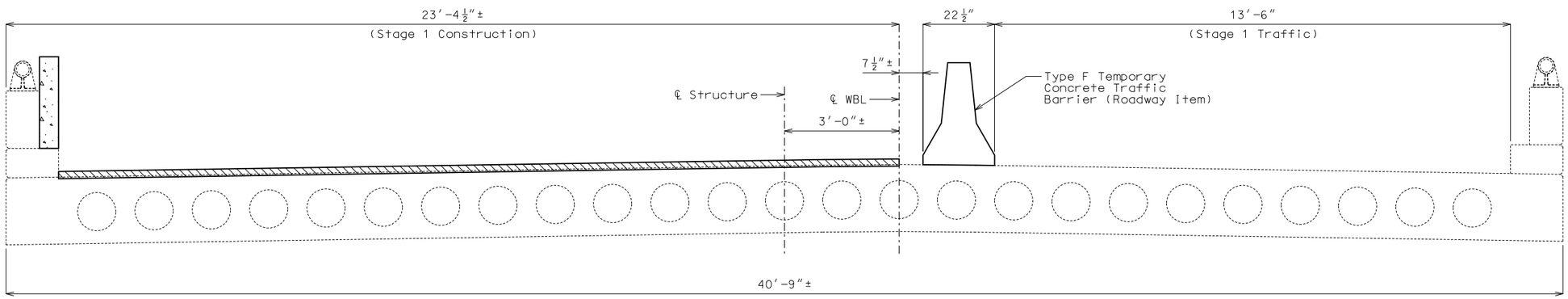


STAGE 1 CONSTRUCTION

℄ Median

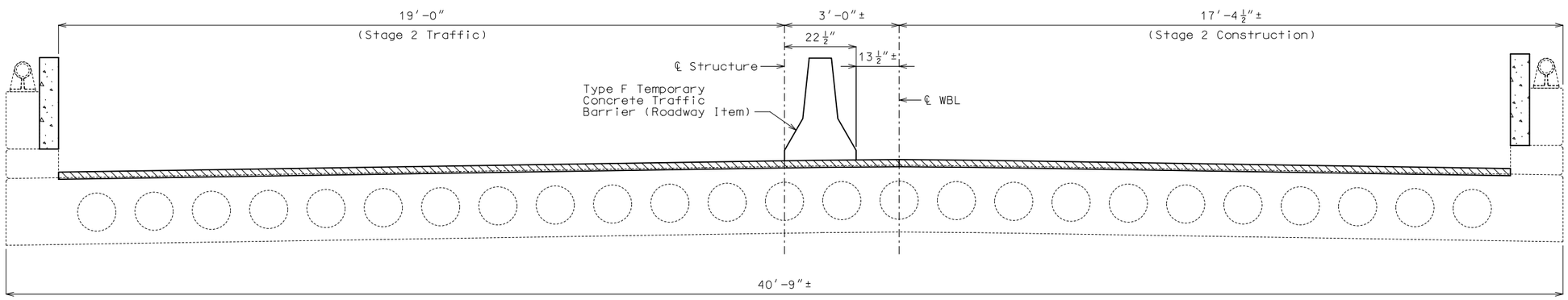


STAGE 2 CONSTRUCTION

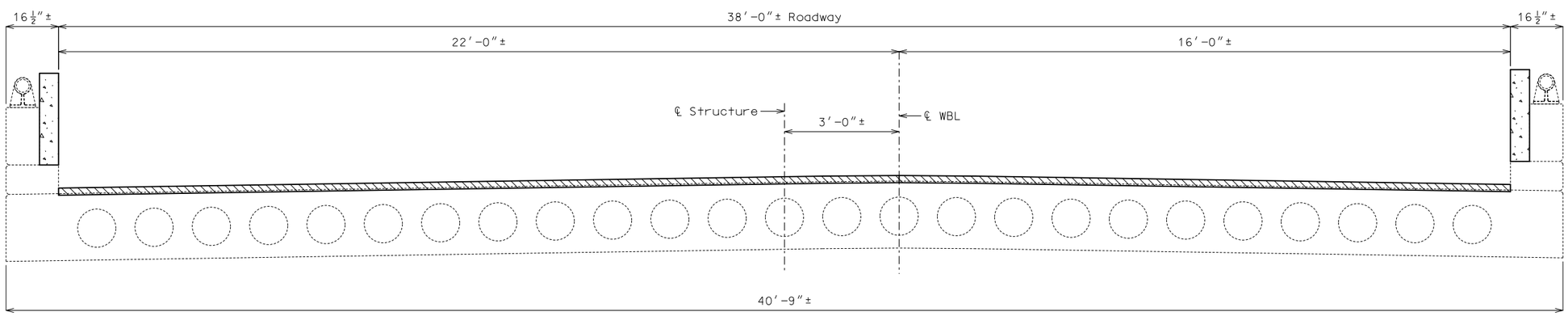


FINAL STAGE

# DETAILS SHOWING STAGED CONSTRUCTION

Note:
Method of attachment for Type F Temporary Concrete Barrier shall be tie down strap.

Detailed Jan. 2020
Checked Jan. 2020

Note: This drawing is not to scale. Follow dimensions.



STATE OF MISSOURI
TRAVIS S. STUMP
NUMBER PE-2010000870
PROFESSIONAL ENGINEER

THIS SHEET HAS BEEN SIGNED, SEALED AND DATED ELECTRONICALLY.

| | |
|---|---|
| DATE PREPARED | 2/18/2020 |
| ROUTE | 210 |
| STATE | MO |
| DISTRICT | BR |
| SHEET NO. | 2 |
| COUNTY | CLAY |
| JOB NO. | J4P3266 |
| CONTRACT ID. | |
| PROJECT NO. | |
| BRIDGE NO. | A21814 |

| DATE | DESCRIPTION |
|---|---|
| | |

MISSOURI HIGHWAYS AND TRANSPORTATION COMMISSION
105 WEST CAPITOL
JEFFERSON CITY, MO 65102
1-888-ASK-MODOT (1-888-275-6636)

IF A SEAL IS PRESENT ON THIS SHEET IT HAS BEEN ELECTRONICALLY SEALED AND DATED.

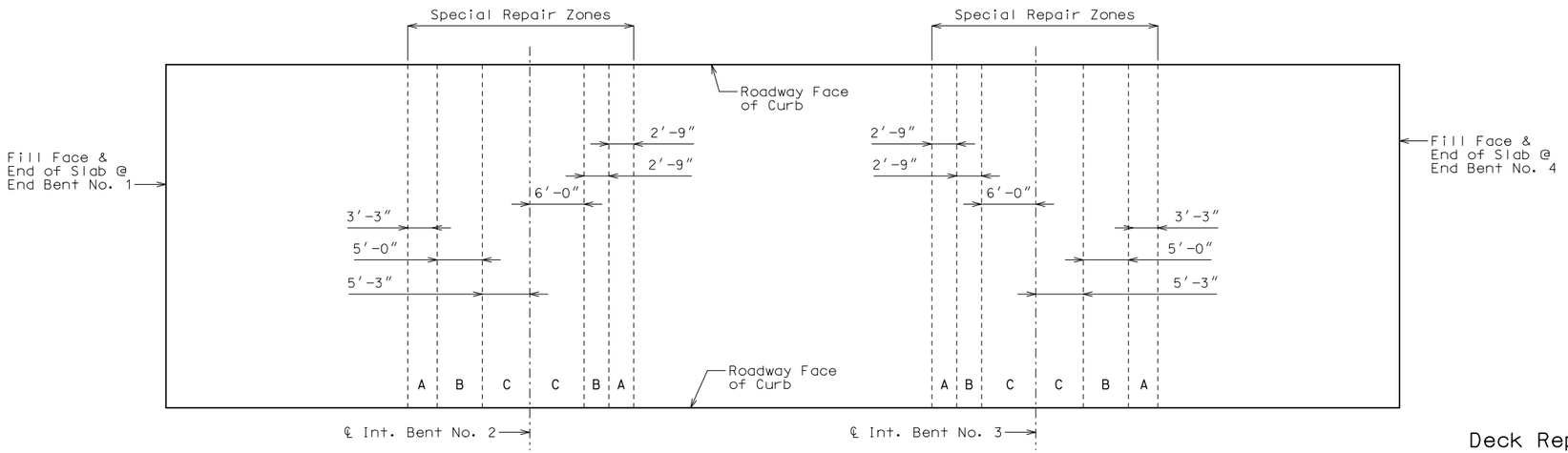


PLAN OF SLAB SHOWING SPECIAL REPAIR ZONES

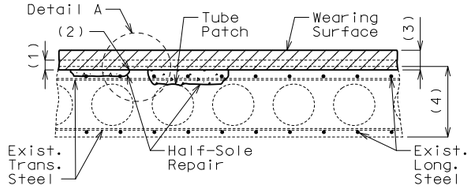


HALF-SOLE REPAIR

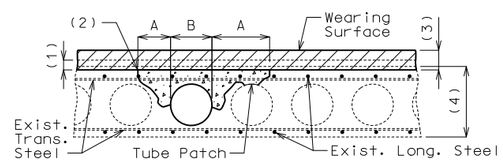


DECK REPAIR WITH VOID TUBE REPLACEMENT

A = Half-Sole Repair
B = Deck Repair with Void Tube Replacement

DECK REPAIR

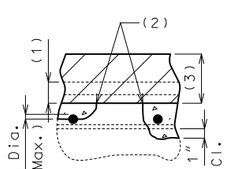


DETAIL A

Clearance around top bar and around bottom bar at the intersection of top bar shall be required when more than half the diameter of the top bar is exposed.

(1) Removal of existing 1/4"± epoxy polymer concrete overlay plus 1/2" of existing deck

(2) 1" vertical side shall be established outside the deteriorated area.

(3) 2 1/4" minimum optional concrete wearing surface

(4) Original depth

## Deck Repair Notes:

**Order of Repair:**

1. Remove existing wearing surface plus 1/2" of existing deck.
2. Sound deck to identify areas in need of repair.
3. Outside special repair zones, complete the following repairs:
   a. Half-Sole Repair
   b. Deck repair with void tube replacement
4. Inside special repair zones, complete the following repairs:
   a. Half-Sole Repair
   b. Deck repair with void tube replacement
5. Place new wearing surface.

**Special Repair Zones:**

Any deck repair in areas not designated as a special repair zone shall be completed prior to work in Zone A.

Deck repair required in the areas designated as special repair zones shall be completed in alphabetical sequence beginning with Zone A. Zones with the same letter designation may be repaired at the same time.

Removal and deck repair shall be completed in one special repair zone and concrete shall have attained a compressive strength of 3200 psi before work can be started in the next special repair zone.

If any single repair area does not exceed 4 square feet in size and the total repair area within a special repair zone does not exceed 12 square feet, the special repair zone may be repaired at the same time as an adjacent zone.

**Void Repair:**

Any damage sustained to the void tube as a result of the contractor's operations shall be patched or replaced as required by the engineer at the contractor's expense.

An exposed void in the deck shall be patched as approved by the engineer in a manner that shall maintain the void area completely free of concrete. Cost of patching an exposed void will be considered completely covered by the contract unit price for Half-Sole Repair.

When a deteriorated portion of the void tube is beyond the point of patching as determined by the engineer, the portion of the deteriorated void tube shall be replaced. The void area shall be maintained completely free of concrete. Cutting of the longitudinal reinforcing steel will not be permitted. The fiber tubes for producing the voids shall have an outside diameter with the wall thickness the same as the existing tubes and anchored at not more than the original spacing. Cost of replacing the void tube will be considered completely covered by the contract unit price for Deck Repair with Void Tube Replacement. Measurement will be horizontal projection of the area of exposed tube in plan.

# DECK REPAIR DETAILS

Detailed Jan. 2020
Checked Jan. 2020

Note: This drawing is not to scale. Follow dimensions.



STATE OF MISSOURI
TRAVIS S. STUMP
NUMBER PE-2010000870
PROFESSIONAL ENGINEER

THIS SHEET HAS BEEN SIGNED, SEALED AND DATED ELECTRONICALLY.

| | |
|---|---|
| DATE PREPARED | 3/3/2020 |
| ROUTE | 210 |
| STATE | MO |
| DISTRICT | BR |
| SHEET NO. | 3 |
| COUNTY | CLAY |
| JOB NO. | J4P3266 |
| CONTRACT ID. | |
| PROJECT NO. | |
| BRIDGE NO. | A21814 |

| DATE | DESCRIPTION |
|---|---|

MISSOURI HIGHWAYS AND TRANSPORTATION COMMISSION
105 WEST CAPITOL
JEFFERSON CITY, MO 65102
1-888-ASK-MODOT (1-888-275-6636)

IF A SEAL IS PRESENT ON THIS SHEET IT HAS BEEN ELECTRONICALLY SEALED AND DATED.

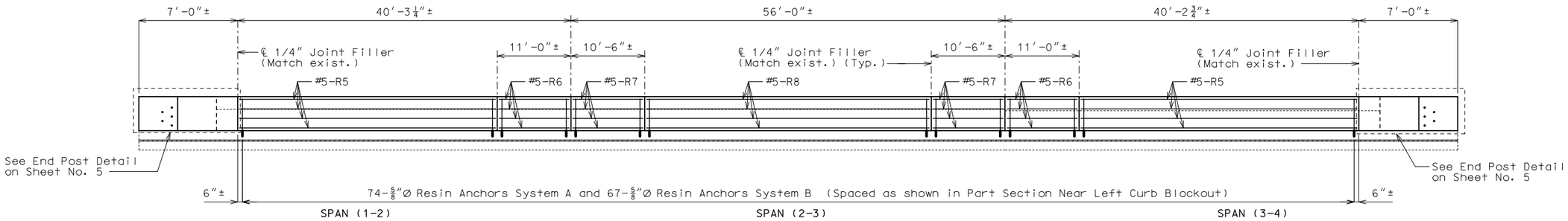


## SECTION NEAR LEFT CURB BLOCKOUT

(Right curb blockout similar)

Notes:

Longitudinal dimensions shown are along grade and are taken at top outside edge of parapet.

Bridge rail not shown for clarity.

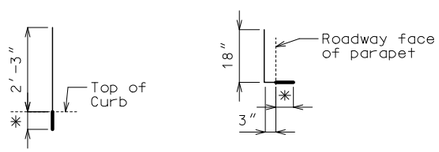


RESIN ANCHOR SYSTEM A
(188 req'd)
(Install in curb)

RESIN ANCHOR SYSTEM B
(134 req'd)
(Install in parapet)

* Use manufacturer's embedment length (5" minimum embedment).

## DETAILS OF RESIN ANCHORS

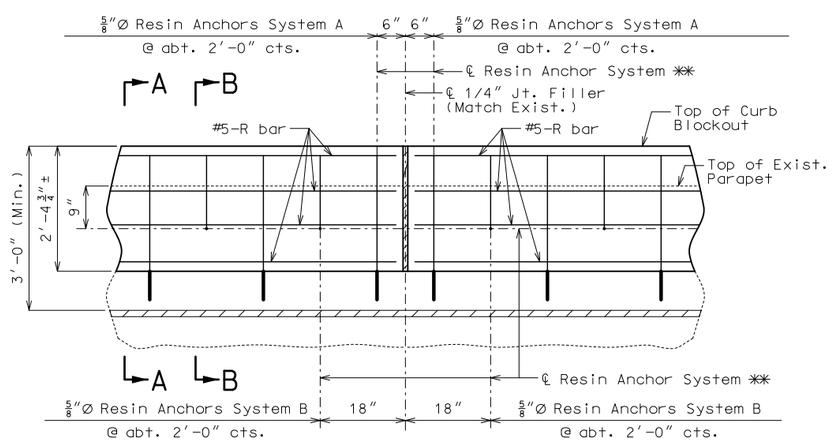


## PART SECTION NEAR CURB BLOCKOUT

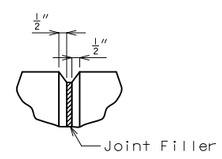


## FILLED JOINT DETAIL

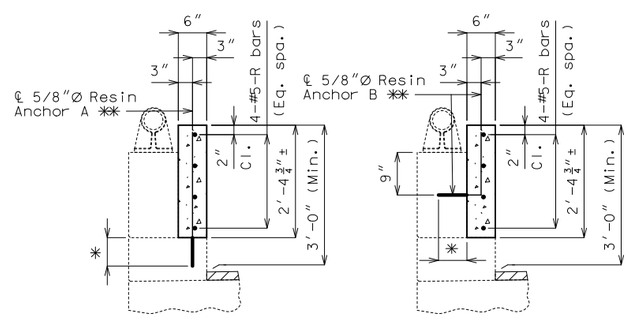


SECTION A-A

SECTION B-B

## CURB BLOCKOUT

Notes:

Concrete in curb blockout shall be Class B-1 with f'c = 4000 psi.

Measurement of curb blockout is to the nearest linear foot, measured at the top outside edge of parapet. (Match existing curb and parapet)

All exposed edges of curb blockout shall have 1/2" radius or 3/8" bevel unless otherwise shown.

Payment for concrete, reinforcing steel, resin anchor systems, and any other work incidental to the curb blockout, complete in place, will be included in the contract unit price for Curb Blockout per linear foot.

Cost of any concrete curb or parapet repair will be included in the contract unit price for Curb Blockout.

All curb blockout reinforcement shall be epoxy coated.

** Shift resin anchors where necessary to clear existing anchor bolts for bridge rail, miss curb outlets (if present) and clear existing reinforcement.

Use a minimum lap of 3'-1" for #5 horizontal curb blockout bars.

Concrete traffic barrier delineators shall be placed on top of the curb blockout similarly as shown on Missouri Standard Plans 617.10 and in accordance with Sec 617. Delineators on bridges with two-lane, two-way traffic shall have retroflective sheeting on both sides. Concrete traffic barrier delineators will be considered completely covered by the contract unit price for Curb Blockout.

The contractor shall use one of the qualified resin anchor systems in accordance with Sec 1039.

The minimum embedment depth in concrete with f'c = 4,000 psi for the resin anchor system shall be that required to meet the minimum ultimate pullout strength in accordance with Sec 1039 but shall not be less than 5 inches.

An epoxy coated #5 Grade 60 reinforcing bar shall be substituted for the 5/8"Ø threaded rod.

STATE OF MISSOURI
TRAVIS S. STUMP
NUMBER PE-2010000870
PROFESSIONAL ENGINEER

THIS SHEET HAS BEEN SIGNED, SEALED AND DATED ELECTRONICALLY.

| DATE PREPARED | |
|---|---|
| 2/18/2020 | |
| ROUTE 210 | STATE MO |
| DISTRICT BR | SHEET NO. 4 |
| COUNTY CLAY | |
| JOB NO. J4P3266 | |
| CONTRACT ID. | |
| PROJECT NO. | |
| BRIDGE NO. A21814 | |

| DATE | DESCRIPTION |
|---|---|
| | |

MISSOURI HIGHWAYS AND TRANSPORTATION COMMISSION
105 WEST CAPITOL
JEFFERSON CITY, MO 65102
1-888-ASK-MODOT (1-888-275-6636)

IF A SEAL IS PRESENT ON THIS SHEET IT HAS BEEN ELECTRONICALLY SEALED AND DATED.

Detailed Jan. 2020
Checked Jan. 2020

Note: This drawing is not to scale. Follow dimensions.

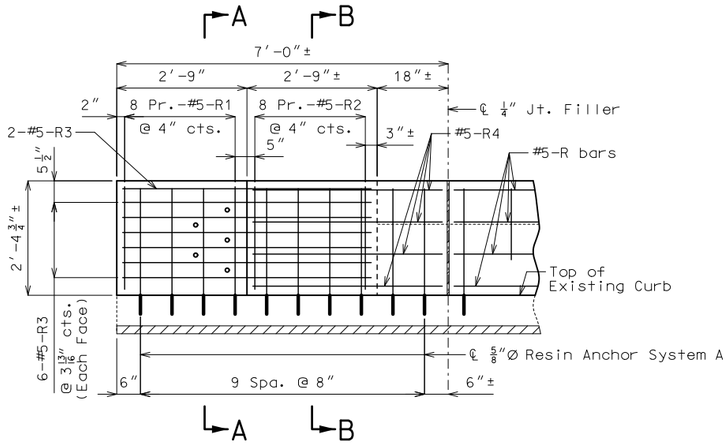


ELEVATION SHOWING LEFT END POST
AT EXISTING END BENT NO. 1
(Right End Post at End Bent No. 1 similar)

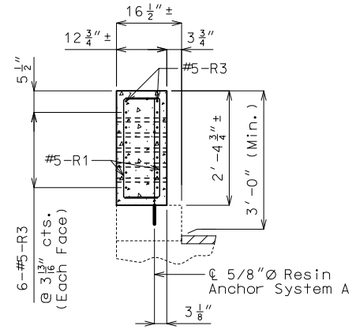


SECTION A-A

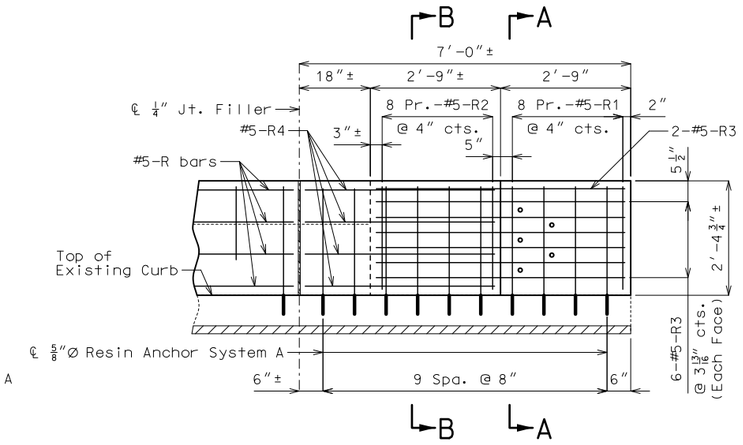


ELEVATION SHOWING LEFT END POST
AT EXISTING END BENT NO. 4
(Right End Post at End Bent No. 4 similar)

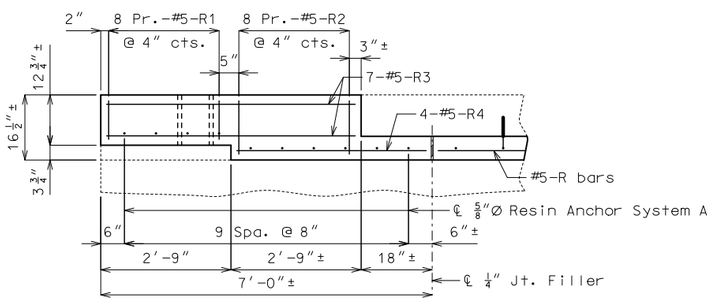


PLAN SHOWING LEFT END POST
AT EXISTING END BENT NO. 1

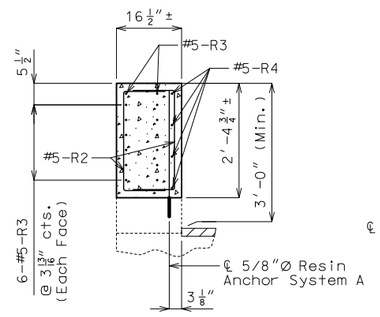


SECTION B-B

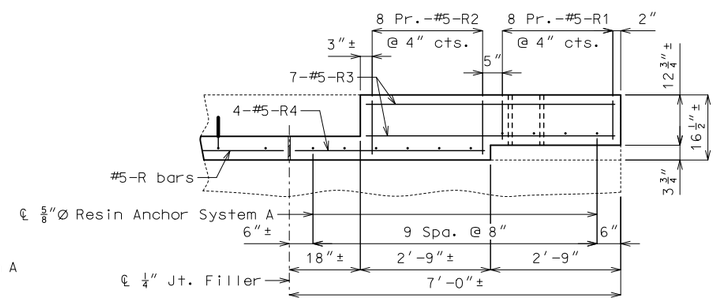


PLAN SHOWING LEFT END POST
AT EXISTING END BENT NO. 4

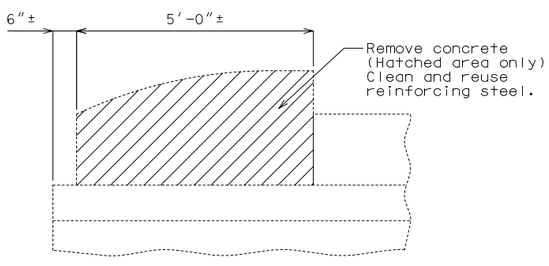


PART ELEVATION SHOWING END POST
CONCRETE REMOVAL

Note:

Cost of removing existing end posts will be considered completely covered by the contract unit price for Curb Blockout.

Notes:

All exposed edges of curb blockout shall have 1/2" radius or 3/8" bevel unless otherwise shown.

Payment for concrete, reinforcing steel, resin anchor systems, and any other work incidental to the curb blockout, complete in place, will be included in the contract unit price for Curb Blockout per linear foot.

Cost of any concrete curb or parapet repair will be included in the contract unit price for Curb Blockout.

All curb blockout reinforcement shall be epoxy coated.

The contractor shall use one of the qualified resin anchor systems in accordance with Sec 1039.

The minimum embedment depth in concrete with f'c = 4,000 psi for the resin anchor system shall be that required to meet the minimum ultimate pullout strength in accordance with Sec 1039 but shall not be less than 5".

An epoxy coated #5 Grade 60 reinforcing bar shall be substituted for the 5/8"Ø threaded rod.

For details of resin anchors, see Sheet No. 4.

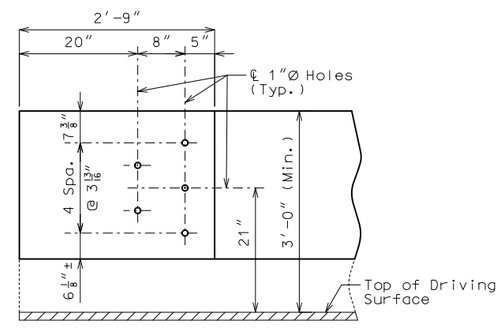


DETAILS OF GUARD RAIL
ATTACHMENT

# CURB BLOCKOUT AT END BENTS

Detailed Jan. 2020
Checked Jan. 2020

Note: This drawing is not to scale. Follow dimensions.



STATE OF MISSOURI
TRAVIS S. STUMP
NUMBER
PE-2010000870
PROFESSIONAL ENGINEER
THIS SHEET HAS BEEN SIGNED, SEALED AND DATED ELECTRONICALLY.

DATE PREPARED
2/18/2020

| ROUTE | STATE |
|---|---|
| 210 | MO |
| DISTRICT | SHEET NO. |
| BR | 5 |

COUNTY
CLAY

JOB NO.
J4P3266

CONTRACT ID.

PROJECT NO.

BRIDGE NO.
A21814

| DATE | DESCRIPTION |
|---|---|

MISSOURI HIGHWAYS AND TRANSPORTATION COMMISSION
105 WEST CAPITOL
JEFFERSON CITY, MO 65102
1-888-ASK-MODOT (1-888-275-6636)

IF A SEAL IS PRESENT ON THIS SHEET IT HAS BEEN ELECTRONICALLY SEALED AND DATED.

# BILL OF REINFORCING STEEL

| NO. REQ'D. | MARK NO. SIZE | MARK NO. MARK | LOCATION | EPOXY (E) | SHAPE NO. | STIRRUP (S) | SUBSTR. (X) | VARIES (V) | NO. EACH | B FT. IN. | C FT. IN. | D FT. IN. | E FT. IN. | F FT. IN. | H FT. IN. | K FT. IN. | NOMINAL LENGTH FT. IN. | ACTUAL LENGTH FT. IN. | WEIGHT LBS. |
|---|---|---|---|---|---|---|---|---|---|---|---|---|---|---|---|---|---|---|---|
| | | | BLOCKOUT | | | | | | | | | | | | | | | | |
| 64 | 5 | R1 | BLOCKOUT | E | 10 | S | | | | | 9.750 | 2 1.750 | | | | | 3 9 | 3 7 | 239 |
| 64 | 5 | R2 | BLOCKOUT | E | 10 | S | | | | | 13.500 | 2 1.750 | | | | | 4 5 | 4 2 | 278 |
| 56 | 5 | R3 | BLOCKOUT | E | 20 | | | | | 5 3.000 | | | | | | | 5 3 | 5 3 | 307 |
| 16 | 5 | R4 | BLOCKOUT | E | 20 | | | | | 4 0.000 | | | | | | | 4 0 | 4 0 | 67 |
| 16 | 5 | R5 | BLOCKOUT | E | 20 | | | | | 29 0.000 | | | | | | | 29 0 | 29 0 | 484 |
| 16 | 5 | R6 | BLOCKOUT | E | 20 | | | | | 10 9.000 | | | | | | | 10 9 | 10 9 | 179 |
| 16 | 5 | R7 | BLOCKOUT | E | 20 | | | | | 10 3.000 | | | | | | | 10 3 | 10 3 | 171 |
| 8 | 5 | R8 | BLOCKOUT | E | 20 | | | | | 34 9.000 | | | | | | | 34 9 | 34 9 | 290 |
| | | | TOTALS | | | | | | | | | | | | | | | | |
| | 5 | | | E | | | | | | | | | | | | | | | 2015 |
| | | | TOTAL | | | | | | | | | | | | | | | | 0 |
| | | | TOTAL | E | | | | | | | | | | | | | | | 2015 |
| | | | Slab on Girder | | | | | | | | | | | | | | | | |
| | 5 | | | E | | | | | | | | | | | | | | | 2015 |
| | | | TOTAL | | | | | | | | | | | | | | | | 2015 |

# BILL OF REINFORCING STEEL

| NO. REQ'D. | MARK NO. SIZE | MARK NO. MARK | LOCATION | EPOXY (E) | SHAPE NO. | STIRRUP (S) | SUBSTR. (X) | VARIES (V) | NO. EACH | B FT. IN. | C FT. IN. | D FT. IN. | E FT. IN. | F FT. IN. | H FT. IN. | K FT. IN. | NOMINAL LENGTH FT. IN. | ACTUAL LENGTH FT. IN. | WEIGHT LBS. |
|---|---|---|---|---|---|---|---|---|---|---|---|---|---|---|---|---|---|---|---|

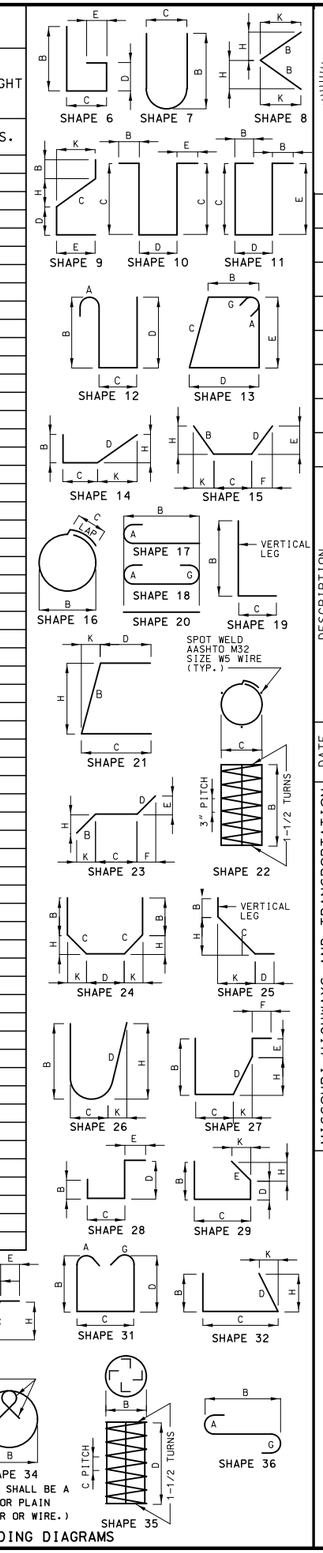


BENDING DIAGRAMS

STATE OF MISSOURI
TRAVIS S. STUMP
NUMBER PE-2010000870
PROFESSIONAL ENGINEER

THIS SHEET HAS BEEN SIGNED, SEALED AND DATED ELECTRONICALLY.

| | |
|---|---|
| DATE PREPARED | 2/18/2020 |
| ROUTE 210 | STATE MO |
| DISTRICT BR | SHEET NO. 6 |
| COUNTY | CLAY |
| JOB NO. | J4P3266 |
| CONTRACT ID. | |
| PROJECT NO. | |
| BRIDGE NO. | A21814 |

DESCRIPTION

DATE

IF A SEAL IS PRESENT ON THIS SHEET IT HAS BEEN ELECTRONICALLY SEALED AND DATED.

MISSOURI HIGHWAYS AND TRANSPORTATION COMMISSION

105 WEST CAPITOL
JEFFERSON CITY, MO 65102
1-888-ASK-MODOT (1-888-275-6636)

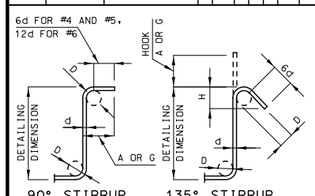


| STIRRUP HOOK DIMENSIONS | | | | |
|---|---|---|---|---|
| GRADES 40 - 50 - 60 KSI | | | | |
| BAR SIZE | D (IN.) | 90° HOOK: HOOK A OR G | 135° HOOK: HOOK A OR G | 135° HOOK: APPROX. H |
| #4 | 2" | 4 1/2" | 4 1/2" | 3" |
| #5 | 2 1/2" | 6" | 5 1/2" | 3 3/4" |
| #6 | 4 1/2" | 12" | 8" | 4 1/2" |

NOTE: UNLESS OTHERWISE NOTED, DIAMETER "D" IS THE SAME FOR ALL BENDS AND HOOKS ON A BAR.

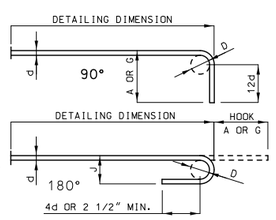


| END HOOK DIMENSIONS | | | | |
|---|---|---|---|---|
| BAR SIZE | D (IN.) | ALL GRADES: 180° HOOKS A OR G | ALL GRADES: 180° HOOKS J | ALL GRADES: 90° HOOKS A OR G |
| #3 | 2 1/4" | 5" | 3" | 6" |
| #4 | 3" | 6" | 4" | 8" |
| #5 | 3 3/4" | 7" | 5" | 10" |
| #6 | 4 1/2" | 8" | 6" | 12" |
| #7 | 5 1/4" | 10" | 7" | 14" |
| #8 | 6" | 11" | 8" | 16" |
| #9 | 9 1/2" | 15" | 11 3/4" | 19" |
| #10 | 10 3/4" | 17" | 13 1/4" | 22" |
| #11 | 12" | 19" | 14 3/4" | 2'-0" |
| #14 | 18 1/4" | 2'-3" | 21 3/4" | 2'-7" |

**NOTE:**
ALL STANDARD HOOKS AND BENDS OTHER THAN 180 DEGREE ARE TO BE BENT WITH SAME PROCEDURE AS FOR 90 DEGREE STANDARD HOOKS.
HOOKS AND BENDS SHALL BE IN ACCORDANCE WITH THE PROCEDURES AS SHOWN ON THIS SHEET.
E = EPOXY COATED REINFORCEMENT.
S = STIRRUP.
X = BAR IS INCLUDED IN SUBSTRUCTURE QUANTITIES.
V = BAR DIMENSIONS VARY IN EQUAL INCREMENTS BETWEEN DIMENSIONS SHOWN ON THIS LINE AND THE FOLLOWING LINE.
NO. EA. = NUMBER OF BARS OF EACH LENGTH.
NOMINAL LENGTHS ARE BASED ON OUT TO OUT DIMENSIONS SHOWN IN BENDING DIAGRAMS AND ARE LISTED FOR FABRICATORS USE. (NEAREST INCH)
ACTUAL LENGTHS ARE MEASURED ALONG CENTERLINE BAR TO THE NEAREST INCH.
PAYWEIGHTS ARE BASED ON ACTUAL LENGTHS.
FOUR ANGLE OR CHANNEL SPACERS ARE REQUIRED FOR EACH COLUMN SPIRAL. SPACERS ARE TO BE PLACED ON INSIDE OF SPIRALS. LENGTH AND WEIGHT OF COLUMN SPIRALS DO NOT INCLUDE SPLICES OR SPACERS.
REINFORCING STEEL (GRADE 60) FY = 60,000 PSI.

Detailed Jan. 2020
Checked Jan. 2020

Note: This drawing is not to scale. Follow dimensions.

SEC/SUR 16 TWP 51N RGE 32W

U.I.P. & REHABILITATE (134'-134') CONTINUOUS COMPOSITE PLATE GIRDER SPANS

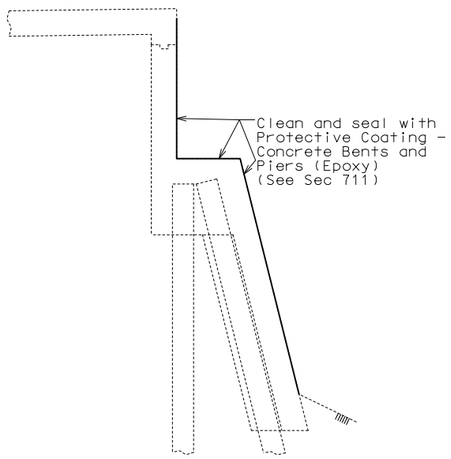


PART SECTION THRU ABUTMENTS
NO. 1 & 3 SHOWING PROTECTIVE COATING

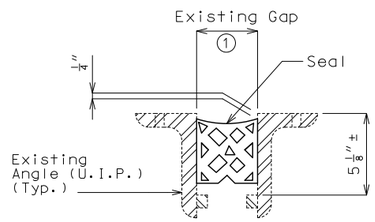


PART CROSS SECTION
THRU EXPANSION JOINT

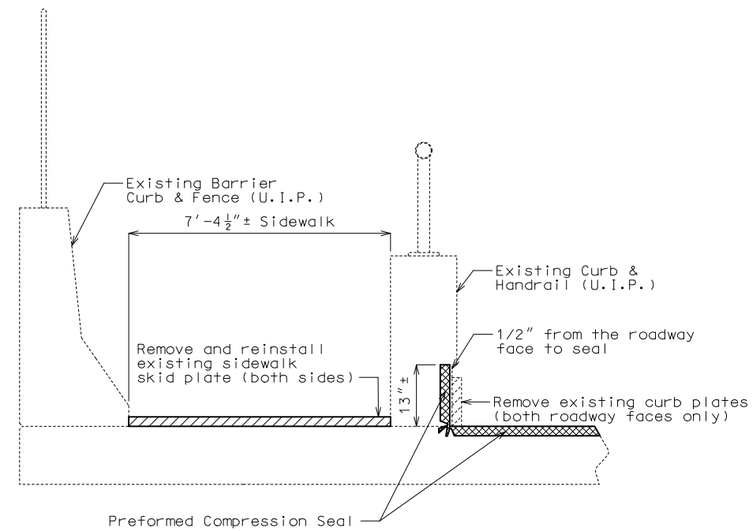


PART SECTION THRU EXPANSION JOINT
AT ABUTMENTS NO. 1 & 3

## General Notes:

**Design Specifications:**
2002 AASHTO LFD (17th Ed.) Standard Specifications
Bridge Deck Rating = 7

**Miscellaneous:**
Outline of old work is indicated by light dashed lines. Heavy lines indicate new work.

Contractor shall verify all dimensions in field before ordering new material.

The area exposed by the removal of concrete and not covered with new concrete shall be coated with an approved qualified special mortar in accordance with Sec 704.

Remove existing preformed compression seals along the entire width of bridge deck from outer to outer curb.

Cost of curb plate removal and disposal will be considered completely covered by the contract unit price for Removal of Existing Expansion Joint Seal or Sealant.

**Traffic Handling:**
Traffic to be maintained on structure during construction. See roadway plans for traffic control.

### Table of Transverse Preformed Compression Seal Dimensions

| Seal width Perpendicular to Joint | Movement Capacity (M ⊥ to Joint) | Min Joint Width ( ⊥ to Joint) | Max Joint Width ( ⊥ to Joint) | Allowed Installation Gap Normal to Joint at RDWY Surface @ Air/Surface Temperature ② ① | | | |
|---|---|---|---|---|---|---|---|
| | | | | @ 40°F | @ 50°F | @ 60°F | @ 70°F |
| 3.5" | 1.40" | 1.58" | 2.98" | 2 1/2" ± | 2 3/8" ± | 2 1/4" ± | 2 1/8" ± |

Note: Depth of seal shall not be less than width of seal.

② The installation temperature shall be taken as the actual air temperature averaged over the 24-hour period immediately preceding installation.

### Estimated Quantities

| ITEM | | TOTAL |
|---|---|---|
| Removal of Existing Expansion Joint Seal or Sealant | linear foot | 144 |
| Protective Coating - Concrete Bents and Piers (Epoxy) | lump sum | 1 |
| Preformed Compression Seal | linear foot | 110 |
| Removal and Reinstallation of Sidewalk Skid Plate | linear foot | 30 |
| | | |
| | | |
| | | |
| | | |

REPAIRS TO BRIDGE: ROUTE NE SOCCER DR. OVER I-435

ROUTE NE SCOCCER DR. FROM N. BRIGHTON AVE. TO ROUTE I-435
ABOUT 1.0 MILES EAST OF N. BRIGHTON AVE.
BEG. STA. 18+45.99± (Match Existing) (NE SOCCER DR.)

# DETAILS OF PREFORMED COMPRESSION SEAL REPLACEMENT AT ABUTMENTS NO. 1 & 3

Detailed Aug. 2019
Checked Dec. 2019

Note: This drawing is not to scale. Follow dimensions.

Sheet No. 1 of 1

STATE OF MISSOURI
TRAVIS S. STUMP
NUMBER
PE-2010000870
PROFESSIONAL ENGINEER

THIS SHEET HAS BEEN SIGNED, SEALED AND DATED ELECTRONICALLY.

DATE PREPARED 2/18/2020

| ROUTE | STATE |
|---|---|
| I-435 | MO |
| DISTRICT | SHEET NO. |
| BR | 1 |

COUNTY CLAY

JOB NO. J4P3266

CONTRACT ID.

PROJECT NO.

BRIDGE NO. A34482

| DESCRIPTION | DATE |
|---|---|
| | |

MISSOURI HIGHWAYS AND TRANSPORTATION COMMISSION
105 WEST CAPITOL
JEFFERSON CITY, MO 65102
1-888-ASK-MODOT (1-888-275-6636)

IF A SEAL IS PRESENT ON THIS SHEET IT HAS BEEN ELECTRONICALLY SEALED AND DATED.

SEC/SUR 2 TWP 51N RGE 33W

U.I.P. & REHABILITATE (114′-108′) CONTINUOUS COMPOSITE PLATE GIRDER SPANS

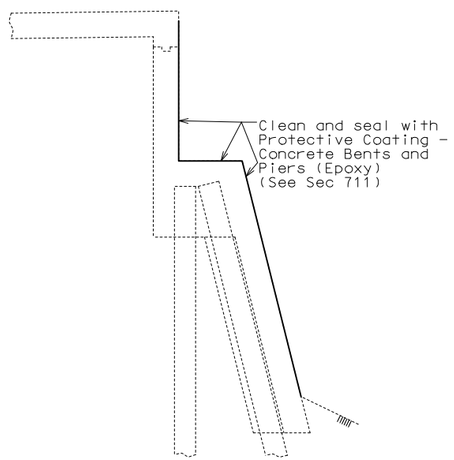


PART SECTION THRU ABUTMENTS NO. 1 & 3
SHOWING PROTECTIVE COATING

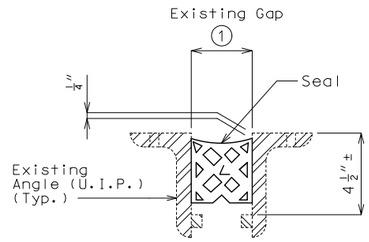


PART CROSS SECTION
THRU EXPANSION JOINT

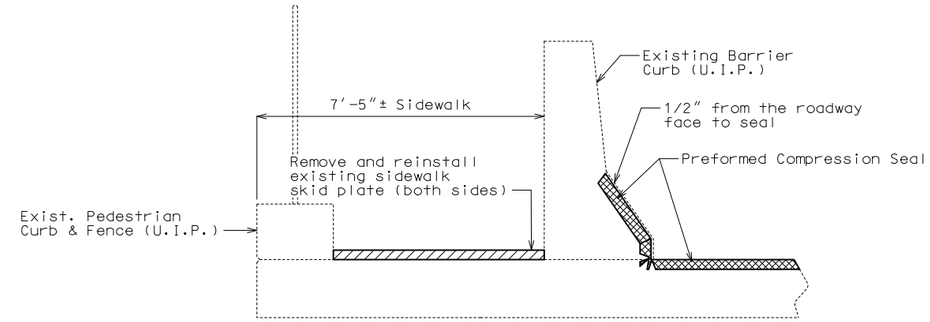


PART SECTION THRU EXPANSION JOINT
AT ABUTMENTS NO. 1 & 3

| Table of Transverse Preformed Compression Seal Dimensions | | | | | | | |
|---|---|---|---|---|---|---|---|
| Seal width Perpendicular to Joint | Movement Capacity (M ⊥ to Joint) | Min Joint Width (⊥ to Joint) | Max Joint Width (⊥ to Joint) | Allowed Installation Gap Normal to Joint at RDWY Surface @ Air/Surface Temperature ② ① | | | |
| | | | | @ 40°F | @ 50°F | @ 60°F | @ 70°F |
| 3.5″ | 1.40″ | 1.58″ | 2.98″ | 2 7/16″ ± | 2 5/16″ ± | 2 1/4″ ± | 2 3/16″ ± |

Note: Depth of seal shall not be less than width of seal.

② The installation temperature shall be taken as the actual air temperature averaged over the 24-hour period immediately preceding installation.

## General Notes:

**Design Specifications:**
2002 AASHTO LFD (17th Ed.) Standard Specifications
Bridge Deck Rating = 7

**Miscellaneous:**
Outline of old work is indicated by light dashed lines. Heavy lines indicate new work.

Contractor shall verify all dimensions in field before ordering new material.

The area exposed by the removal of concrete and not covered with new concrete shall be coated with an approved qualified special mortar in accordance with Sec 704.

Remove existing preformed compression seals along the entire width of bridge deck from outer to outer curb.

**Traffic Handling:**
Traffic to be maintained on structure during construction. See roadway plans for traffic control.

| Estimated Quantities | | |
|---|---|---|
| Item | | Total |
| Removal of Existing Expansion Joint Seal or Sealant | linear foot | 196 |
| Protective Coating - Concrete Bents and Piers (Epoxy) | lump sum | 1 |
| Preformed Compression Seal | linear foot | 165 |
| Removal and Reinstallation of Sidewalk Skid Plate | linear foot | 26 |
| | | |
| | | |
| | | |
| | | |

REPAIRS TO BRIDGE: ROUTE NORTH OAK
ST. TRAFFICWAY OVER ROUTE 152

ROUTE NORTH OAK ST. TRAFFICWAY FROM ROUTE 69 TO ROUTE 152
ABOUT 5.5 MILES NORTH OF ROUTE 69
BEG. STA. 38+50.58± (MATCH EXISTING) (NORTH OAK ST. TRAFFICWAY)

# DETAILS OF PREFORMED COMPRESSION SEAL REPLACEMENT AT ABUTMENTS NO. 1 & 3

Detailed Aug. 2019
Checked Dec. 2019

Note: This drawing is not to scale. Follow dimensions.

Sheet No. 1 of 1

STATE OF MISSOURI
TRAVIS S. STUMP
NUMBER
PE-2010000870
PROFESSIONAL ENGINEER

THIS SHEET HAS BEEN SIGNED, SEALED AND DATED ELECTRONICALLY.

| DATE PREPARED | |
|---|---|
| 2/18/2020 | |
| ROUTE 152 | STATE MO |
| DISTRICT BR | SHEET NO. 1 |
| COUNTY CLAY | |
| JOB NO. J4P3266 | |
| CONTRACT ID. | |
| PROJECT NO. | |
| BRIDGE NO. A35302 | |

| DATE | DESCRIPTION |
|---|---|

MISSOURI HIGHWAYS AND TRANSPORTATION COMMISSION
105 WEST CAPITOL
JEFFERSON CITY, MO 65102
1-888-ASK-MODOT (1-888-275-6636)

IF A SEAL IS PRESENT ON THIS SHEET IT HAS BEEN ELECTRONICALLY SEALED AND DATED.

SEC/SUR 15 TWP 48N RGE 33W

# U.I.P. & REHABILITATE (102'-109') CONTINUOUS COMPOSITE PLATE GIRDER SPANS

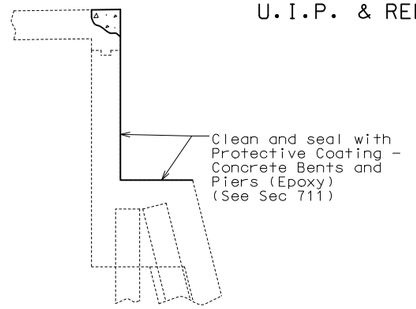


PART SECTION THRU
ABUTMENTS NO. 1 & 3
SHOWING PROTECTIVE COATING
Note: Strip seal armor not shown for clarity

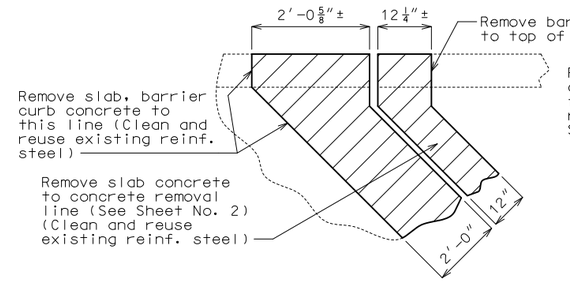


PART PLAN SHOWING CONCRETE REMOVAL
AT END ABUTMENTS NO. 1 & 3
(Left side at End Bent No. 3 shown, left side at Abutment No. 1 similar)

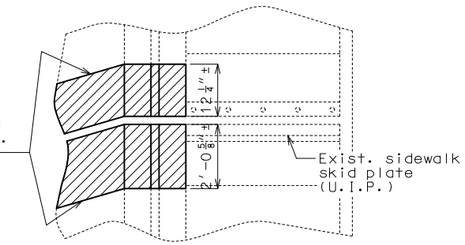


PART PLAN SHOWING CONCRETE REMOVAL
AT END ABUTMENTS NO. 1 & 3
(Right side at End Bent No. 3 shown, right side at Abutment No. 1 similar)

## General Notes:

**Design Specifications:**
2002 AASHTO LFD (17th Ed.) Standard Specifications
Bridge Deck Rating = 7

**Design Unit Stresses:**
Class B-2 Concrete f'c = 4,000 psi
Reinforcing Steel fy = 60,000 psi

**Concrete Protective Coating:**
Protective coating for concrete bents and piers Epoxy shall be applied as shown on the bridge plans and in accordance with Sec 711.

**Miscellaneous:**
Outline of old work is indicated by light dashed lines. Heavy lines indicate new work.

Contractor shall verify all dimensions in field before ordering new material.

Bars bonded in old concrete not removed shall be cleanly stripped and embedded into new concrete where possible. If length is available, old bars shall extend into new concrete at least 40 diameters for plain bars and 30 diameters for deformed bars, unless otherwise noted.

Payment for curb removal and all new concrete and reinforcement for barrier curb, complete in place, will be considered completely covered by the contract unit price for Remove and Replace Barrier Curb.

The S1 bars are shown in Bill of Reinforcing Steel as one continuous bar. The contractor may use a mechanical bar splice to facilitate staged construction. When a mechanical bar splices is used, the actual bar segment length will be determined by the contractor to accommodate manufacturer's recommendations for installation and ease of construction. The cost of furnishing and installing the bar splices will be considered completely covered by the covered by the contract unit price for Reinforcing Steel (Epoxy Coated). No adjustment of the quantity of reinforcing steel will be allowed for the use of mechanical bar splices.

Use in place existing sidewalk skid plates near Abutments No. 1 & 3.

Minimum clearance to reinforcing steel shall be 1 1/2", unless otherwsie shown.

The contractor shall use one of the qualified resin anchor systems in accordance with Sec 1039.

Cost of furnishing and installing the resin anchor system, complete in place, will be considered completely covered by the contract unit price for Strip Seal Expansion Joint System.

The minimum embedment depth in concrete with f'c = 4,000 psi for the resin anchor systems shall be that required to meet the minimum ultimate pullout strength in accordance with Sec 1039 but shall not be less than 5".

**Traffic Handling:**
Traffic to be maintained on structure during construction. See roadway plans for traffic control.

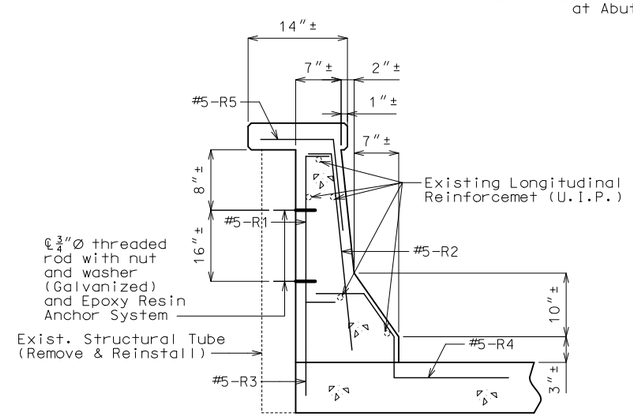


SECTION A-A

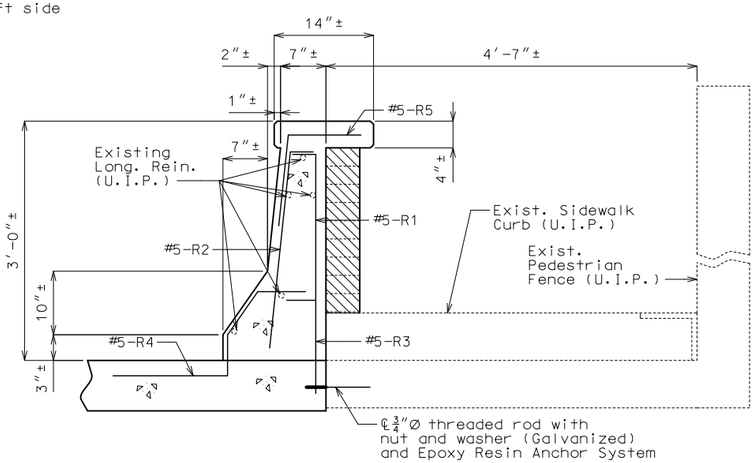


SECTION A-A (SIDEWALK SIDE)

Note: Temporarily support barrier curb facing, sidewalk and pedestrian fence, and remove and repair brick veneer as required for expansion device removal and replacement. (See Job Special Provisions)

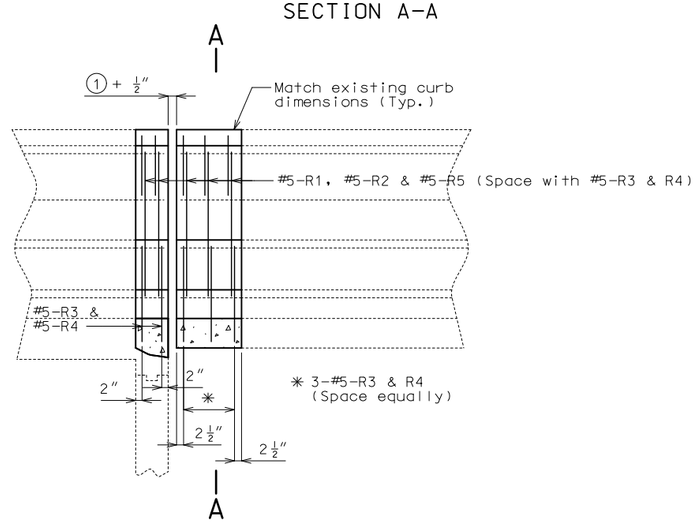


PART ELEVATION OF
BARRIER CURB

## Estimated Quantities

| Item | | Total |
|---|---|---|
| Removal of Existing Expansion Joint & Adjacent Concrete | linear foot | 63 |
| Remove and Replace Barrier Curb | linear foot | 12 |
| Class B-2 Concrete | cu. yard | 5.9 |
| Reinforcing Steel (Epoxy Coated) | pound | 730 |
| Protective Coating - Concrete Bents and Piers (Epoxy) | lump sum | 1 |
| Strip Seal Expansion Joint System | linear foot | 63 |
| | | |
| | | |
| | | |
| | | |

REPAIRS TO BRIDGE: ROUTE 77TH STREET
OVER BRUCE R WATKINS DR. (RTE. 71)

ROUTE 77TH STREET FROM PROSPECT AVE. TO WALROND
ABOUT 0.3 MILES EAST OF PROSPECT AVE.
BEG. STA. 13+83.33± (MATCH EXISTING) (77TH STREET)

STD. 617.20
STD. 706.35

Detailed Sep. 2019
Checked Jan. 2020

Note: This drawing is not to scale. Follow dimensions.



STATE OF MISSOURI
TRAVIS S. STUMP
NUMBER PE-2010000870
PROFESSIONAL ENGINEER
THIS SHEET HAS BEEN SIGNED, SEALED AND DATED ELECTRONICALLY.

DATE PREPARED 2/18/2020
ROUTE 71 STATE MO
DISTRICT BR SHEET NO. 1
COUNTY JACKSON
JOB NO. J4P3266
CONTRACT ID.
PROJECT NO.
BRIDGE NO. A47382

DESCRIPTION
DATE

MISSOURI HIGHWAYS AND TRANSPORTATION COMMISSION
105 WEST CAPITOL
JEFFERSON CITY, MO 65102
1-888-ASK-MODOT (1-888-275-6636)

IF A SEAL IS PRESENT ON THIS SHEET IT HAS BEEN ELECTRONICALLY SEALED AND DATED.

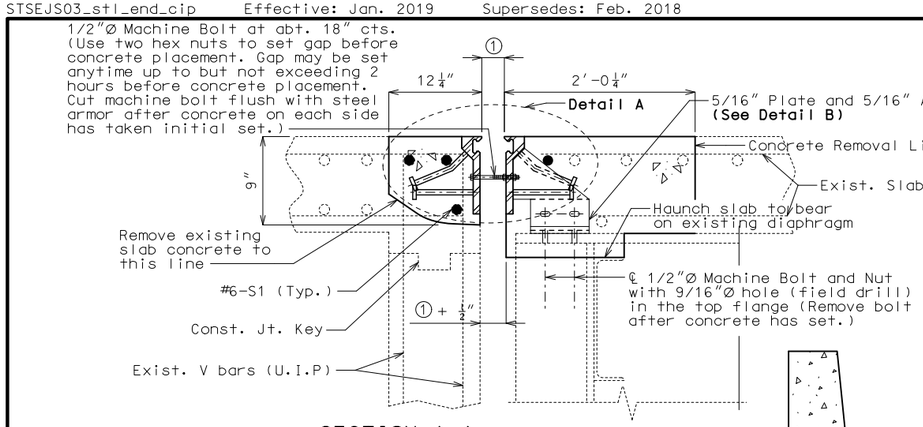


SECTION A-A

Note: Strip seal gland not shown for clarity.

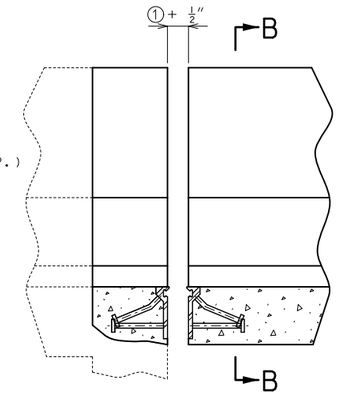


Note: Strip seal gland not shown for clarity.

PART ELEVATION OF BARRIER CURB

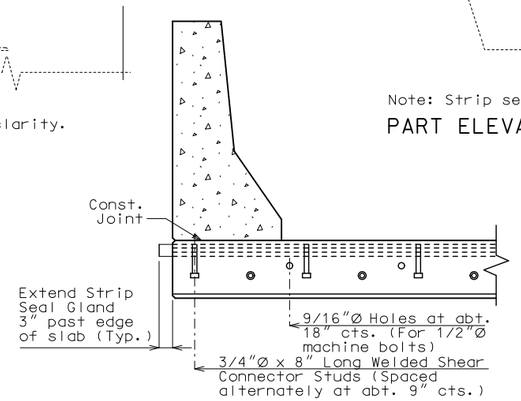


PART SECTION B-B

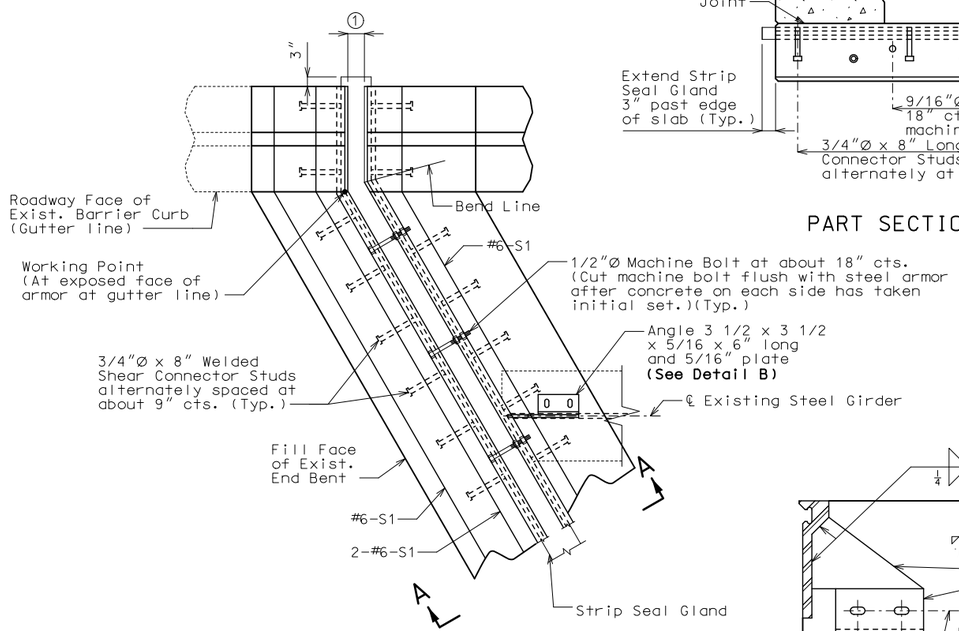


PART PLAN

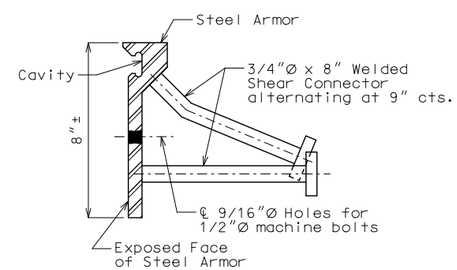


DETAIL OF JOINT ARMOR

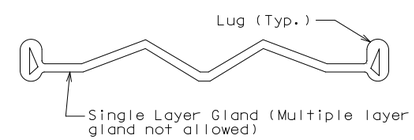


DETAIL OF GLAND

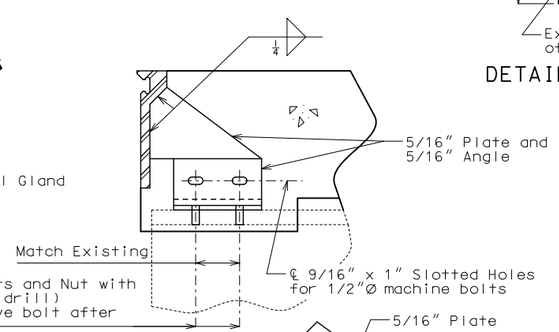


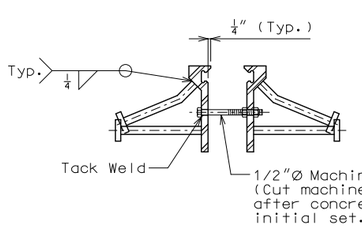


DETAIL A

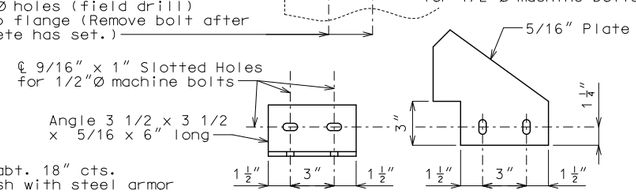


DETAIL B

## GENERAL NOTES:

Expansion joint system shall be fabricated in one section, except for staged construction and when the length is over 50 feet. A complete joint penetration groove welded splice shall be required. Welds shall be ground flush to provide a smooth surface. The expansion joint system shall be fabricated and installed to the crown and grade of the roadway.

The strip seal gland shall be installed in joints in one continuous piece without field splices. Factory splicing will be permitted for joints in excess of 53 feet.

Structural steel for the expansion joint system shall be ASTM A709 Grade 36 except the steel armor may be ASTM A709 Grade 50W. Anchors for the expansion joint system shall be in accordance with Sec 1037.

Strip seal expansion joint system shall be in accordance with Sec 717.

Structural steel for the expansion joint system shall be coated with a minimum of two coats of inorganic zinc primer (5 mils minimum) or galvanized in accordance with ASTM A123. Anchors need not be protected from overspray.

Longitudinal reinforcing steel shall be placed, bent or cut so that ends shall be 1" from the vertical leg of the steel armor at the expansion joint system.

Concrete shall be forced under and around steel armor and anchors. Proper consolidation of the concrete shall be achieved by localized internal vibration.

② The installation temperature shall be taken as the actual air temperature averaged over the 24-hour period immediately preceding installation.

③ MoDOT Construction personnel will indicate the strip seal expansion joint system installed.

Steel armor may also be referred to as extrusion or rail.

Table of Allowed Transverse Strip Seal Expansion Joint System

| Manufacturer | Strip Seal System (Designated Name) | Movement Parallel to RDWY | ① Allowed Installation Gap Normal to Joint at RDWY Surface @ Air/Surface Temperature ② | | | | | | ③ |
|---|---|---|---|---|---|---|---|---|---|
| | | | @ 40°F | @ 50°F | @ 60°F | @ 70°F | @ 80°F | @ 90°F | |
| D S Brown | Strip seal L2-400 | 1 1/2" | 2 3/16" | 2 1/8" | 2" | 1 7/8" | 1 13/16" | 1 11/16" | ☐ |
| Watson Bowman Acme (Wabo) | Strip seal SE-300 | 1 1/2" | 2 3/16" | 2 1/8" | 2" | 1 7/8" | 1 13/16" | 1 11/16" | ☐ |
| Watson Bowman Acme (Wabo) | Strip seal SE-400 | 1 1/2" | 2 3/16" | 2 1/8" | 2" | 1 7/8" | 1 13/16" | 1 11/16" | ☐ |

# DETAILS OF STRIP SEAL EXPANSION JOINT SYSTEM AT ABUTMENT NO. 1 & 3

Detailed Sep. 2019
Checked Jan. 2020

Note: This drawing is not to scale. Follow dimensions.



STATE OF MISSOURI
TRAVIS S. STUMP
NUMBER PE-2010000870
PROFESSIONAL ENGINEER
THIS SHEET HAS BEEN SIGNED, SEALED AND DATED ELECTRONICALLY.

| DATE PREPARED | |
|---|---|
| 2/18/2020 | |
| ROUTE 71 | STATE MO |
| DISTRICT BR | SHEET NO. 2 |
| COUNTY JACKSON | |
| JOB NO. J4P3266 | |
| CONTRACT ID. | |
| PROJECT NO. | |
| BRIDGE NO. A47382 | |

| DATE | DESCRIPTION |
|---|---|
| | |

IF A SEAL IS PRESENT ON THIS SHEET IT HAS BEEN ELECTRONICALLY SEALED AND DATED.

MISSOURI HIGHWAYS AND TRANSPORTATION COMMISSION
105 WEST CAPITOL
JEFFERSON CITY, MO 65102
1-888-ASK-MODOT (1-888-275-6636)

# BILL OF REINFORCING STEEL

| NO. REQ'D. | MARK NO. SIZE | MARK NO. MARK | LOCATION | EPOXY (E) | SHAPE NO. | STIRRUP (S) | SUBSTR. (X) | VARIES (V) | NO. EACH | B FT. IN. | C FT. IN. | D FT. IN. | E FT. IN. | F FT. IN. | H FT. IN. | K FT. IN. | NOMINAL LENGTH FT. IN. | ACTUAL LENGTH FT. IN. | WEIGHT LBS. |
|---|---|---|---|---|---|---|---|---|---|---|---|---|---|---|---|---|---|---|---|
| | | | SLAB | | | | | | | | | | | | | | | | |
| 8 | 6 | S1 | SLAB | E | 20 | | | | | 33 9.000 | | | | | | | 33 9 | 33 9 | 406 |
| | | | BARRIER CURB | | | | | | | | | | | | | | | | |
| 20 | 5 | R1 | BARRIER CURB | E | 19 | | | | | 2 6.000 | 3.500 | | | | | | 2 10 | 2 8 | 56 |
| 20 | 5 | R2 | BARRIER CURB | E | 15 | | | | | 2 6.125 | 2 6.125 | 3.500 | | 3.500 | 2 6.000 | 3.000 | 5 4 | 5 2 | 108 |
| 20 | 5 | R3 | BARRIER CURB | E | 19 | | | | | 17.000 | 6.000 | | | | | | 0 23 | 0 22 | 38 |
| 20 | 5 | R4 | BARRIER CURB | E | 27 | | | | | | 6.000 | 11.125 | 7.000 | 12.000 | 9.125 | 6.375 | 3 0 | 2 10 | 59 |
| 20 | 5 | R5 | BARRIER CURB | E | 15 | S | | | | 2 0.125 | 11.000 | | | | 2 0.000 | 2.375 | 2 11 | 2 10 | 59 |
| | | | TOTALS | | | | | | | | | | | | | | | | |
| | 5 | | | E | | | | | | | | | | | | | | | 320 |
| | 6 | | | E | | | | | | | | | | | | | | | 406 |
| | | | TOTAL | | | | | | | | | | | | | | | | 0 |
| | | | TOTAL | E | | | | | | | | | | | | | | | 726 |
| | | | Slab on Girder | | | | | | | | | | | | | | | | |
| | 6 | | | E | | | | | | | | | | | | | | | 406 |
| | | | TOTAL | | | | | | | | | | | | | | | | 406 |
| | | | Safety Barrier Curb | | | | | | | | | | | | | | | | |
| | 5 | | | E | | | | | | | | | | | | | | | 320 |
| | | | TOTAL | | | | | | | | | | | | | | | | 320 |

# BILL OF REINFORCING STEEL

| NO. REQ'D. | MARK NO. SIZE | MARK NO. MARK | LOCATION | EPOXY (E) | SHAPE NO. | STIRRUP (S) | SUBSTR. (X) | VARIES (V) | NO. EACH | B FT. IN. | C FT. IN. | D FT. IN. | E FT. IN. | F FT. IN. | H FT. IN. | K FT. IN. | NOMINAL LENGTH FT. IN. | ACTUAL LENGTH FT. IN. | WEIGHT LBS. |
|---|---|---|---|---|---|---|---|---|---|---|---|---|---|---|---|---|---|---|---|

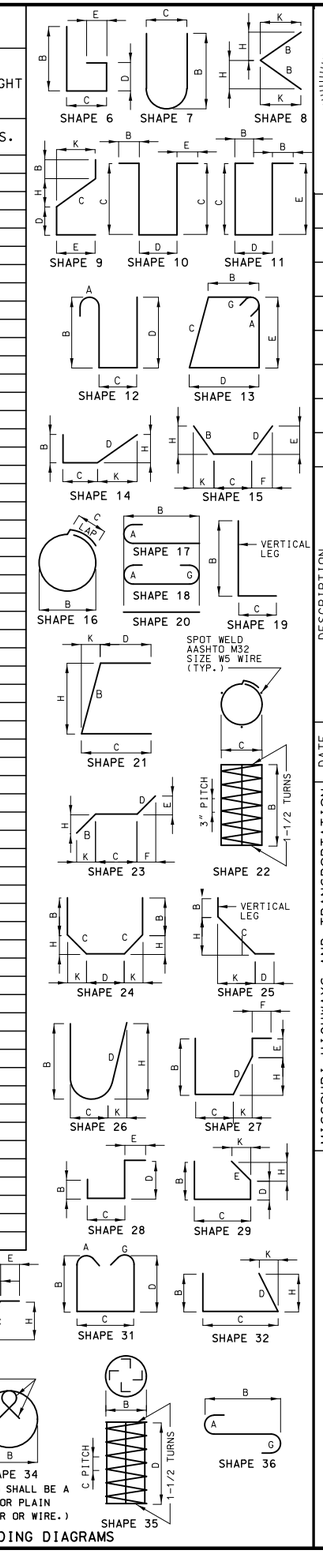


BENDING DIAGRAMS

STATE OF MISSOURI
TRAVIS S. STUMP
NUMBER PE-2010000870
PROFESSIONAL ENGINEER
THIS SHEET HAS BEEN SIGNED, SEALED AND DATED ELECTRONICALLY.

| | |
|---|---|
| DATE PREPARED | 2/18/2020 |
| ROUTE | 71 |
| STATE | MO |
| DISTRICT | BR |
| SHEET NO. | 3 |
| COUNTY | JACKSON |
| JOB NO. | J4P3266 |
| CONTRACT ID. | |
| PROJECT NO. | |
| BRIDGE NO. | A47382 |

DESCRIPTION

DATE

MISSOURI HIGHWAYS AND TRANSPORTATION COMMISSION

105 WEST CAPITOL
JEFFERSON CITY, MO 65102
1-888-ASK-MODOT (1-888-275-6636)

IF A SEAL IS PRESENT ON THIS SHEET IT HAS BEEN ELECTRONICALLY SEALED AND DATED.

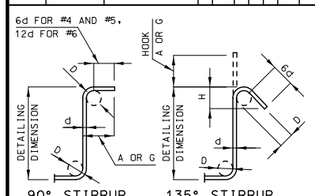


| STIRRUP HOOK DIMENSIONS | | | | |
|---|---|---|---|---|
| GRADES 40 - 50 - 60 KSI | | | | |
| BAR SIZE | D (IN.) | 90° HOOK | 135° HOOK | |
| | | HOOK A OR G | HOOK A OR G | APPROX. H |
| #4 | 2" | 4 1/2" | 4 1/2" | 3" |
| #5 | 2 1/2" | 6" | 5 1/2" | 3 3/4" |
| #6 | 4 1/2" | 12" | 8" | 4 1/2" |

NOTE: UNLESS OTHERWISE NOTED, DIAMETER "D" IS THE SAME FOR ALL BENDS AND HOOKS ON A BAR.

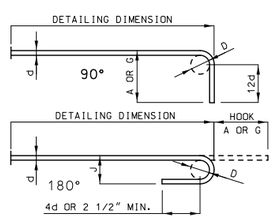


| END HOOK DIMENSIONS | | | | |
|---|---|---|---|---|
| BAR SIZE | D (IN.) | ALL GRADES | | |
| | | 180° HOOKS | | 90° HOOKS |
| | | A OR G | J | A OR G |
| #3 | 2 1/4" | 5" | 3" | 6" |
| #4 | 3" | 6" | 4" | 8" |
| #5 | 3 3/4" | 7" | 5" | 10" |
| #6 | 4 1/2" | 8" | 6" | 12" |
| #7 | 5 1/4" | 10" | 7" | 14" |
| #8 | 6" | 11" | 8" | 16" |
| #9 | 9 1/2" | 15" | 11 3/4" | 19" |
| #10 | 10 3/4" | 17" | 13 1/4" | 22" |
| #11 | 12" | 19" | 14 3/4" | 2'-0" |
| #14 | 18 1/4" | 2'-3" | 21 3/4" | 2'-7" |

**NOTE:**
ALL STANDARD HOOKS AND BENDS OTHER THAN 180 DEGREE ARE TO BE BENT WITH SAME PROCEDURE AS FOR 90 DEGREE STANDARD HOOKS.
HOOKS AND BENDS SHALL BE IN ACCORDANCE WITH THE PROCEDURES AS SHOWN ON THIS SHEET.
E = EPOXY COATED REINFORCEMENT.
S = STIRRUP.
X = BAR IS INCLUDED IN SUBSTRUCTURE QUANTITIES.
V = BAR DIMENSIONS VARY IN EQUAL INCREMENTS BETWEEN DIMENSIONS SHOWN ON THIS LINE AND THE FOLLOWING LINE.
NO. EA. = NUMBER OF BARS OF EACH LENGTH.
NOMINAL LENGTHS ARE BASED ON OUT TO OUT DIMENSIONS SHOWN IN BENDING DIAGRAMS AND ARE LISTED FOR FABRICATORS USE. (NEAREST INCH)
ACTUAL LENGTHS ARE MEASURED ALONG CENTERLINE BAR TO THE NEAREST INCH.
PAYWEIGHTS ARE BASED ON ACTUAL LENGTHS.
FOUR ANGLE OR CHANNEL SPACERS ARE REQUIRED FOR EACH COLUMN SPIRAL. SPACERS ARE TO BE PLACED ON INSIDE OF SPIRALS. LENGTH AND WEIGHT OF COLUMN SPIRALS DO NOT INCLUDE SPLICES OR SPACERS.
REINFORCING STEEL (GRADE 60) FY = 60,000 PSI.

Detailed Sep. 2019
Checked Jan. 2020

Note: This drawing is not to scale. Follow dimensions.

SEC/SUR 3 TWP 48N RGE 33W

# U.I.P. & REHABILITATE (61.7′-61.7′) PRESTRESSED CONCRETE I-GIRDER SPANS

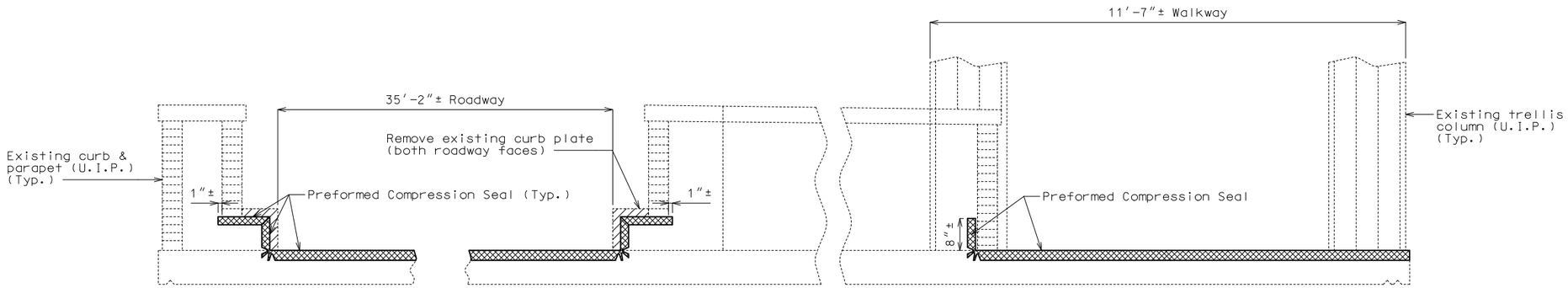


PART SECTION THRU EXPANSION JOINT AT
ABUTMENTS NO. 1 & 3

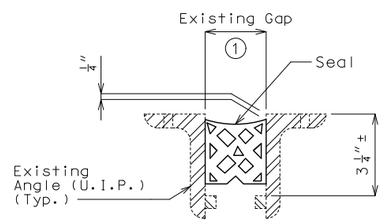


PART CROSS SECTION
THRU EXPANSION JOINT

## General Notes:

**Design Specifications:**
2002 AASHTO LFD (17th Ed.) Standard Specifications
Bridge Deck Rating = 8

**Miscellaneous:**
Outline of old work is indicated by light dashed lines. Heavy lines indicate new work.

Contractor shall verify all dimensions in field before ordering new material.

The area exposed by the removal of concrete and not covered with new concrete shall be coated with an approved qualified special mortar in accordance with Sec 704.

Remove existing preformed compression seals in roadway and walkway.

Cost of curb plate removal and disposal will be considered completely covered by the contract unit price for Removal of Existing Expansion Joint Seal or Sealant.

**Traffic Handling:**
Traffic to be maintained on structure during construction. See roadway plans for traffic control.

**Table of Transverse Preformed Compression Seal Dimensions**

| Seal width Perpendicular to Joint | Movement Capacity (M ⊥ to Joint) | Min Joint Width (⊥ to Joint) | Max Joint Width (⊥ to Joint) | Allowed Installation Gap Normal to Joint at RDWY Surface @ Air/Surface Temperature ② ① | | | |
|---|---|---|---|---|---|---|---|
| | | | | @ 40°F | @ 50°F | @ 60°F | @ 70°F |
| 2.5″ | 1.00″ | 1.13″ | 2.13″ | 1 3/4″ ± | 1 11/16″ ± | 1 5/8″ ± | 1 9/16″ ± |

Note: Depth of seal shall not be less than width of seal.

② The installation temperature shall be taken as the actual air temperature averaged over the 24-hour period immediately preceding installation.

**Estimated Quantities**

| ITEM | | TOTAL |
|---|---|---|
| Removal of Existing Expansion Joint Seal or Sealant | linear foot | 92 |
| Preformed Compression Seal | linear foot | 92 |
| | | |
| | | |
| | | |
| | | |

REPAIRS TO BRIDGE: ROUTE MEYER BLVD. EB
OVER BRUCE R. WATKINS DR. (ROUTE 71)

ROUTE MEYER BLVD. FROM SWOPE PARKWAY TO EAST 63RD STREET
ABOUT 0.7 MILES WEST OF SWOPE PARKWAY
BEG. STA. 8+96.99± (MATCH EXISTING) (MEYER BLVD EB)

# DETAILS OF PREFORMED COMPRESSION SEAL REPLACEMENT AT ABUTMENTS NO. 1 & 3

Detailed Aug. 2019
Checked Dec. 2019

Note: This drawing is not to scale. Follow dimensions.



STATE OF MISSOURI
TRAVIS S. STUMP
NUMBER PE-2010000870
PROFESSIONAL ENGINEER
THIS SHEET HAS BEEN SIGNED, SEALED AND DATED ELECTRONICALLY.

DATE PREPARED 2/18/2020
ROUTE 71 STATE MO
DISTRICT BR SHEET NO. 1
COUNTY JACKSON
JOB NO. J4P3266
CONTRACT ID.
PROJECT NO.
BRIDGE NO. A48611

DESCRIPTION
DATE

MISSOURI HIGHWAYS AND TRANSPORTATION COMMISSION
105 WEST CAPITOL
JEFFERSON CITY, MO 65102
1-888-ASK-MODOT (1-888-275-6636)

IF A SEAL IS PRESENT ON THIS SHEET IT HAS BEEN ELECTRONICALLY SEALED AND DATED.

SEC/SUR 3 TWP 48N RGE 33W

# U.I.P. & REHABILITATE (61.9′-61.9′) PRESTRESSED CONCRETE I-GIRDER SPANS

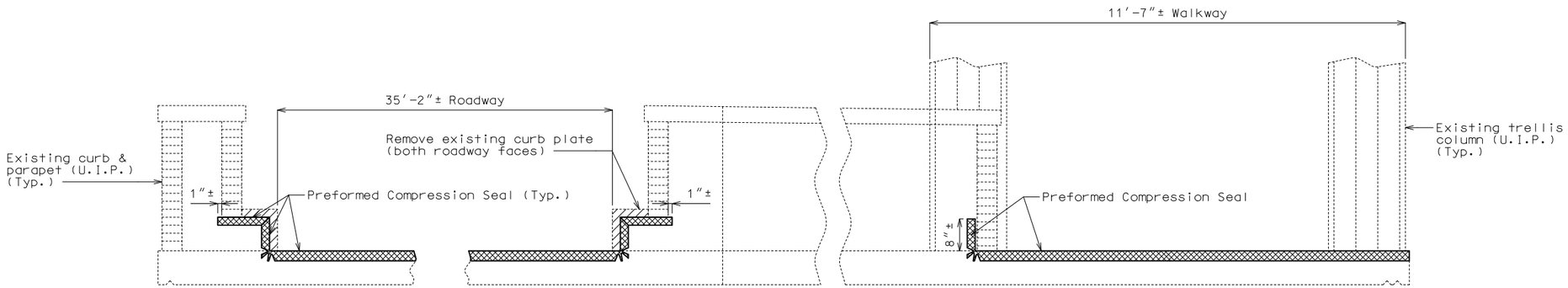


PART SECTION THRU EXPANSION JOINT AT
ABUTMENTS NO. 1 & 3

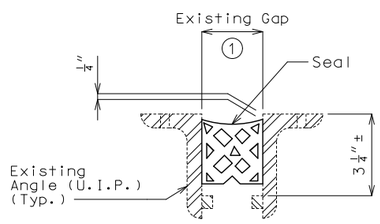


PART CROSS SECTION
THRU EXPANSION JOINT

## General Notes:

**Design Specifications:**
2002 AASHTO LFD (17th Ed.) Standard Specifications
Bridge Deck Rating = 7

**Miscellaneous:**
Outline of old work is indicated by light dashed lines. Heavy lines indicate new work.

Contractor shall verify all dimensions in field before ordering new material.

The area exposed by the removal of concrete and not covered with new concrete shall be coated with an approved qualified special mortar in accordance with Sec 704.

Remove existing preformed compression seals in roadway and walkway.

Cost of curb plate removal and disposal will be considered completely covered by the contract unit price for Removal of Existing Expansion Joint Seal or Sealant.

**Traffic Handling:**
Traffic to be maintained on structure during construction. See roadway plans for traffic control.

### Table of Transverse Preformed Compression Seal Dimensions

| Seal width Perpendicular to Joint | Movement Capacity (M ⊥ to Joint) | Min Joint Width (⊥ to Joint) | Max Joint Width (⊥ to Joint) | Allowed Installation Gap Normal to Joint at RDWY Surface @ Air/Surface Temperature ② ① | | | |
|---|---|---|---|---|---|---|---|
| | | | | @ 40°F | @ 50°F | @ 60°F | @ 70°F |
| 2.5″ | 1.00″ | 1.13″ | 2.13″ | 1 3/4″± | 1 11/16″± | 1 5/8″± | 1 9/16″± |

Note: Depth of seal shall not be less than width of seal.

② The installation temperature shall be taken as the actual air temperature averaged over the 24-hour period immediately preceding installation.

### Estimated Quantities

| ITEM | | TOTAL |
|---|---|---|
| Removal of Existing Expansion Joint Seal or Sealant | linear foot | 92 |
| Preformed Compression Seal | linear foot | 92 |
| | | |
| | | |
| | | |
| | | |
| | | |

REPAIRS TO BRIDGE: ROUTE MEYER BLVD. WB
OVER BRUCE R. WATKINS DR. (ROUTE 71)
ROUTE MEYER BLVD. FROM SWOPE PARKWAY TO EAST 63RD STREET
ABOUT 0.7 MILES WEST OF SWOPE PARKWAY
BEG. STA. 39+75.40± (MATCH EXISTING) (MEYER BLVD. WB)

# DETAILS OF PREFORMED COMPRESSION SEAL REPLACEMENT AT ABUTMENTS NO. 1 & 3

Detailed Aug. 2019
Checked Dec. 2019

Note: This drawing is not to scale. Follow dimensions.

Sheet No. 1 of 1

STATE OF MISSOURI
TRAVIS S. STUMP
NUMBER PE-2010000870
PROFESSIONAL ENGINEER
THIS SHEET HAS BEEN SIGNED, SEALED AND DATED ELECTRONICALLY.

DATE PREPARED 2/18/2020
ROUTE 71 | STATE MO
DISTRICT BR | SHEET NO. 1
COUNTY JACKSON
JOB NO. J4P3266
CONTRACT ID.
PROJECT NO.
BRIDGE NO. A48621

DESCRIPTION | DATE

MISSOURI HIGHWAYS AND TRANSPORTATION COMMISSION
105 WEST CAPITOL
JEFFERSON CITY, MO 65102
1-888-ASK-MODOT (1-888-275-6636)

IF A SEAL IS PRESENT ON THIS SHEET IT HAS BEEN ELECTRONICALLY SEALED AND DATED.

SEC/SUR 3 TWP 48N RGE 33W

# U.I.P. & REHABILITATE (86'-80') PRESTRESSED CONCRETE I-GIRDER SPANS

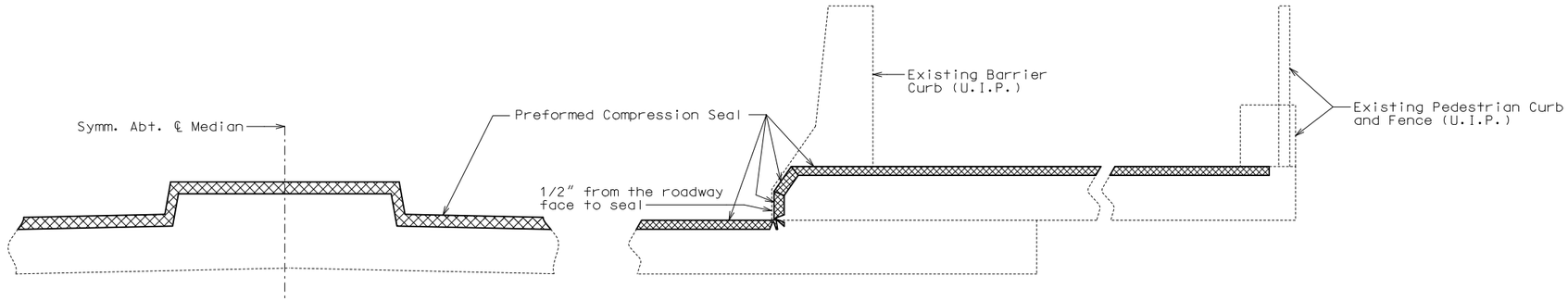


PART SECTION THRU EXPANSION JOINT AT ABUTMENTS NO. 1 & 3

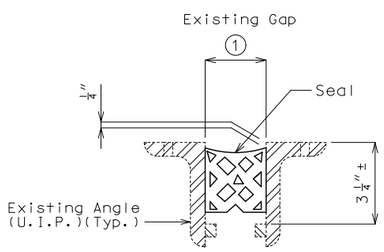


PART CROSS SECTION THRU EXPANSION JOINT

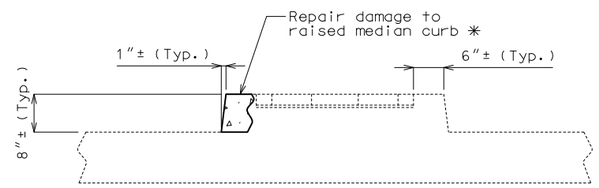


SECTION THRU RASIED MEDIAN CURB SHOWING REPAIR

✳ Location of median curb repair to be as directed by the engineer.

## General Notes:

**Design Specifications:**
2002 AASHTO LFD (17th Ed.) Standard Specifications
Bridge Deck Rating = 6

**Miscellaneous:**
Outline of old work is indicated by light dashed lines. Heavy lines indicate new work.

Contractor shall verify all dimensions in field before ordering new material.

Remove existing preformed compression seals along the entire width of bridge deck including sidewalks.

Payment for Raised Median Repair, complete in place, shall include all concrete and any repair or replacement of stone pavers as required for the repair.

Concrete for raised median repair shall be Class B-1 or Class B-2, f'c = 4,000 psi

**Traffic Handling:**
Traffic to be maintained on structure during construction. See roadway plans for traffic control.

| Table of Transverse Preformed Compression Seal Dimensions | | | | | | | |
|---|---|---|---|---|---|---|---|
| Seal width Perpendicular to Joint | Movement Capacity (M ⊥ to Joint) | Min Joint Width ( ⊥ to Joint) | Max Joint Width ( ⊥ to Joint) | Allowed Installation Gap Normal to Joint at RDWY Surface @ Air/Surface Temperature ② ① | | | |
| | | | | @ 40°F | @ 50°F | @ 60°F | @ 70°F |
| 2.5" | 1.00" | 1.13" | 2.13" | 1 13/16" ± | 1 11/16" ± | 1 5/8" ± | 1 9/16" ± |

Note: Depth of seal shall not be less than width of seal.

② The installation temperature shall be taken as the actual air temperature averaged over the 24-hour period immediately preceding installation.

| Estimated Quantities | | |
|---|---|---|
| ITEM | | TOTAL |
| Removal of Existing Expansion Joint Seal or Sealant | linear foot | 192 |
| Preformed Compression Seal | linear foot | 192 |
| Raised Median Repair | linear foot | 40 |
| | | |
| | | |
| | | |

REPAIRS TO BRIDGE: ROUTE 63RD STREET OVER BRUCE R. WATKINS DR. (ROUTE 71)

ROUTE 63RD STREET FROM SWOPE PARKWAY TO 63RD STREET
ABOUT 0.7 MILE WEST OF SWOPE PARKWAY
BEG. STA. 8+45.10± (Match Existing) (63RD STREET)

# DETAILS OF PREFORMED COMPRESSION SEAL REPLACEMENT AT ABUTENTS NO. 1 & 3

Note: This drawing is not to scale. Follow dimensions.

Sheet No. 1 of 1

Detailed Aug. 2019
Checked Jan. 2020

STATE OF MISSOURI
TRAVIS S. STUMP
NUMBER PE-2010000870
PROFESSIONAL ENGINEER

THIS SHEET HAS BEEN SIGNED, SEALED AND DATED ELECTRONICALLY.

DATE PREPARED 2/18/2020
ROUTE 71 | STATE MO
DISTRICT BR | SHEET NO. 1
COUNTY JACKSON
JOB NO. J4P3266
CONTRACT ID.
PROJECT NO.
BRIDGE NO. A48631

| DESCRIPTION | DATE |
|---|---|
| | |

MISSOURI HIGHWAYS AND TRANSPORTATION COMMISSION
105 WEST CAPITOL
JEFFERSON CITY, MO 65102
1-888-ASK-MODOT (1-888-275-6636)

IF A SEAL IS PRESENT ON THIS SHEET IT HAS BEEN ELECTRONICALLY SEALED AND DATED.

SEC/SUR 15 TWP 49N RGE 33W

# U.I.P. & REHABILITATE (120'-128') CONTINUOUS COMPOSITE PLATE GIRDER SPANS

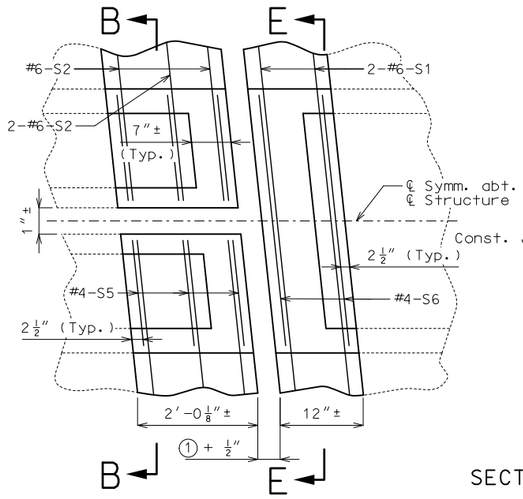


PART PLAN OF RAISED MEDIAN CURB AT ABUTMENT NO. 3
(Stone pavers not shown)

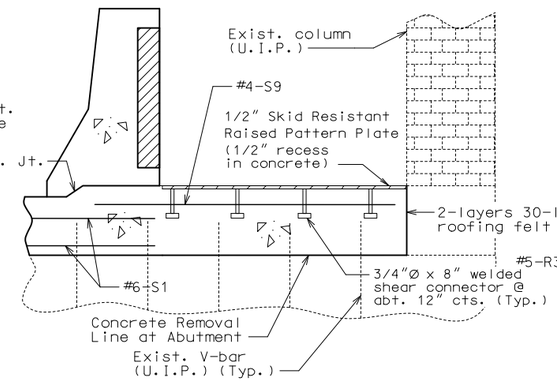


SECTION C-C THRU SIDEWALK AT ABUTMENT

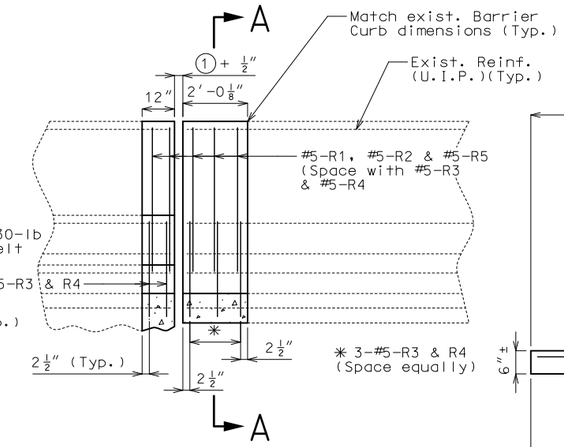


PART ELEVATION OF BARRIER CURB AT END BENT NO. 1
(Abutment No. 3 similar)

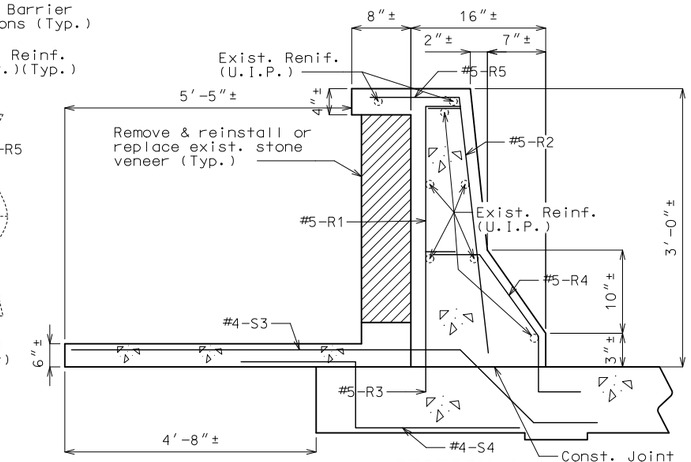


SECTION A-A

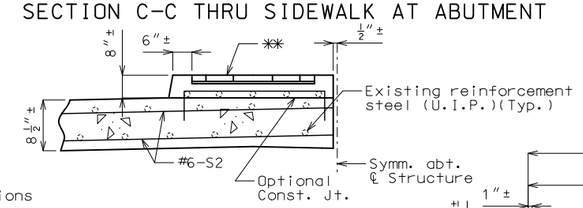


SECTION B-B

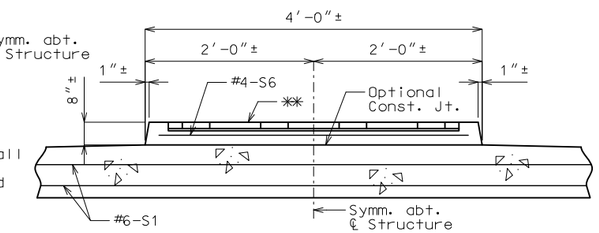


✳✳ Remove and reinstall or replace stone pavers as required for construction

SECTION E-E

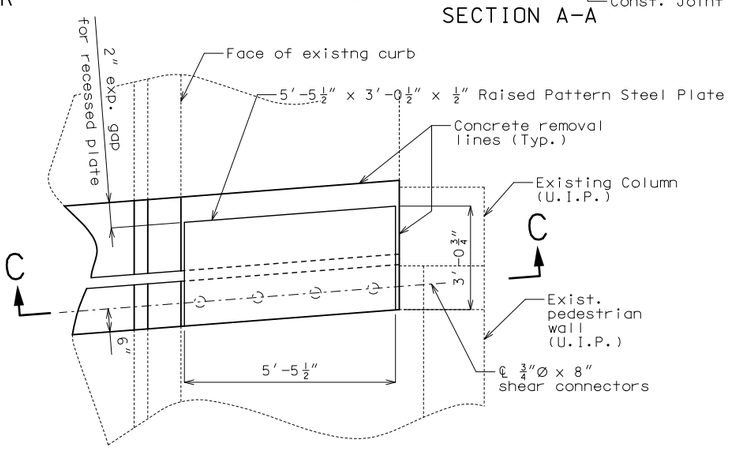


TYPICAL PART PLAN OF RIGHT SIDEWALK AT END BENT NO. 1
(Left sidewalk similar and both sidewalks @ Abut. No. 3)

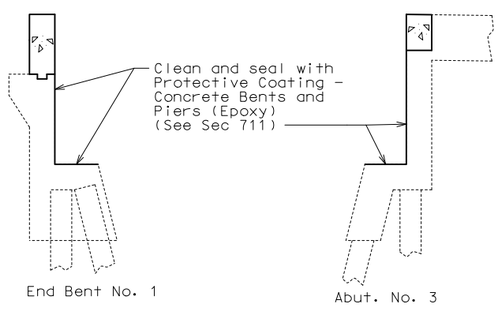


PART SECTION THRU ABUTMENTS SHOWING PROTECTIVE COATING

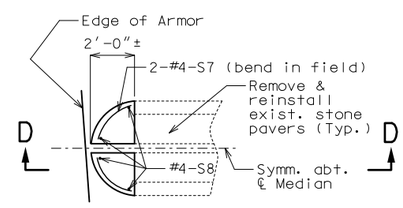


PART PLAN OF RAISED MEDIAN CURB AT END BENT NO. 1

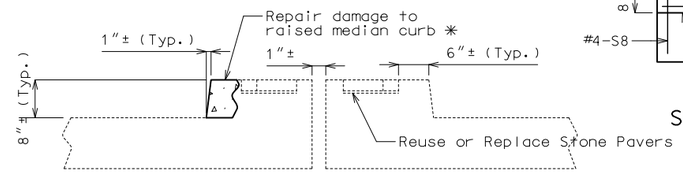


SECTION THRU RAISED MEDIAN CURB (ON BRIDGE SLAB) SHOWING REPAIR

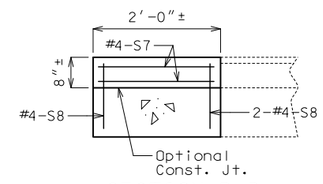


SECTION D-D

✳ location & material of median curb repair to be as directed by engineer

## General Notes:

**Design Specifications:**
2002 AASHTO LFD (17th Ed.) Standard Specifications
Bridge Deck Rating = 7

**Design Unit Stresses:**
Class B-2 Concrete f'c = 4,000 psi
Reinforcing Steel fy = 60,000 psi

**Miscellaneous:**
Outline of old work is indicated by light dashed lines. Heavy lines indicate new work.

Contractor shall verify all dimensions in field before ordering new material.

Bars bonded in old concrete not removed shall be cleanly stripped and embedded into new concrete where possible. If length is available, old bars shall extend into new concrete at least 40 diameters for plain bars and 30 diameters for deformed bars, unless otherwise noted.

The area exposed by the removal of concrete and not covered with new concrete shall be coated with an approved qualified special mortar in accordance with Sec 704.

Cost of furnishing and installing sidewalk skid plates will be considered completely covered by the contract unit price for Strip Seal Expansion Joint System.

For general specifications of raised pattern steel plate, see Sheet No. 2.

Reinstall any lighting standard electrical wiring and conduit removed during construction (payment for labor and materials will be considered completely covered by the contract unit price of other items).

Payment for barrier curb removal and all new concrete and reinforcement for barrier curb, complete in place, will be considered completely covered by the contract unit price for Remove and Replace Barrier Curb.

Payment for raised median curb removal and all new concrete and reinforcement for raised median curb, complete in place, will be considered completely covered by the contract unit price for Remove and Replace Raised Median Curb.

Minimum clearance to reinforcing steel shall be 1½", unless otherwsie shown.

**Traffic Handling:**
Traffic to be maintained on structure during construction. See roadway plans for traffic control.

## Estimated Quantities

| Item | | Total |
|---|---|---|
| Removal of Existing Expansion Joint & Adjacent Concrete | linear foot | 193 |
| Remove and Replace Barrier Curb | linear foot | 12 |
| Remove and Replace Rasied Median Curb | sq. foot | 24 |
| Raised Median Repair | linear foot | 20 |
| Class B-2 Concrete | cu. yard | 16.9 |
| Reinforcing Steel (Epoxy Coated) | pound | 2570 |
| Protective Coating - Concrete Bents and Piers (Epoxy) | lump sum | 1 |
| Strip Seal Expansion Joint System | linear foot | 163 |

## REPAIRS TO BRIDGE: ROUTE 31ST STREET OVER BRUCE R. WATKINS DR. (RTE. 71)

ROUTE 31ST STREET FROM PROSPECT TO ROUTE 71
ABOUT 0.4 MILE EAST OF PROSPECT AVE.
BEG. STA. 8+73.20± (MATCH EXISTING) (31ST STREET)

STD. 617.20
STD. 706.35

Detailed Sep. 2019
Checked Jan. 2020

Note: This drawing is not to scale. Follow dimensions.



STATE OF MISSOURI
TRAVIS S. STUMP
NUMBER PE-2010000870
PROFESSIONAL ENGINEER
THIS SHEET HAS BEEN SIGNED, SEALED AND DATED ELECTRONICALLY.

DATE PREPARED 2/18/2020
ROUTE 71 STATE MO
DISTRICT BR SHEET NO. 1
COUNTY JACKSON
JOB NO. J4P3266
CONTRACT ID.
PROJECT NO.
BRIDGE NO. A51801

DESCRIPTION
DATE

IF A SEAL IS PRESENT ON THIS SHEET IT HAS BEEN ELECTRONICALLY SEALED AND DATED.

MISSOURI HIGHWAYS AND TRANSPORTATION COMMISSION
105 WEST CAPITOL
JEFFERSON CITY, MO 65102
1-888-ASK-MODOT (1-888-275-6636)

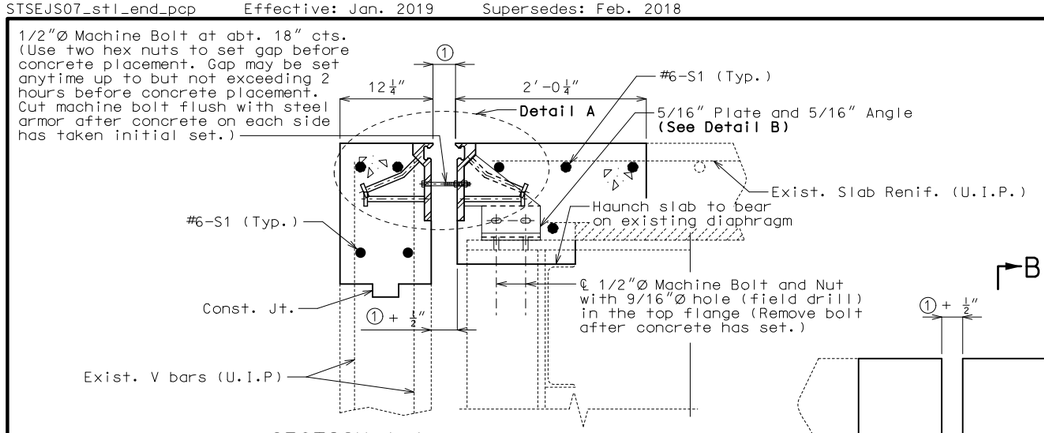


SECTION A-A

Note: Strip seal gland not shown for clarity.

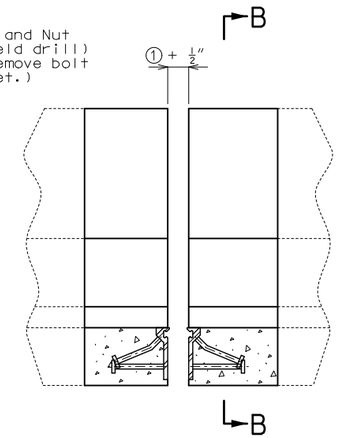


Note: Strip seal gland not shown for clarity.

PART ELEVATION OF BARRIER CURB

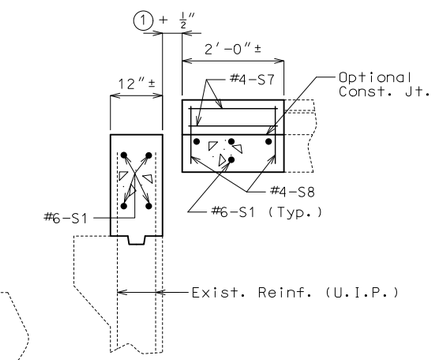


PART SECTION C-C

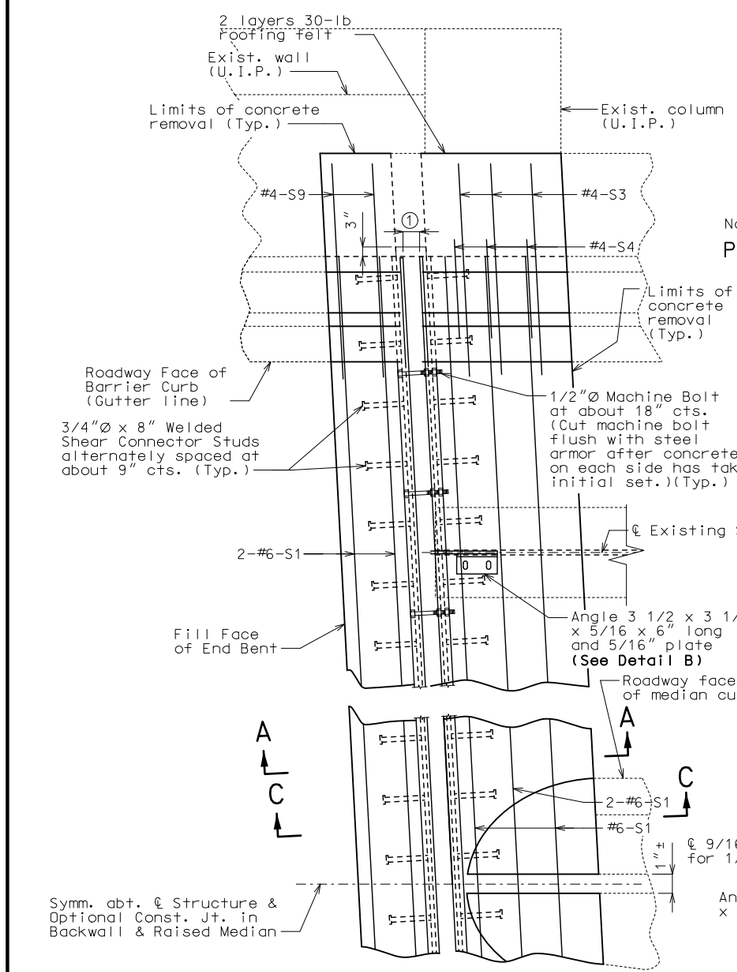


PART PLAN

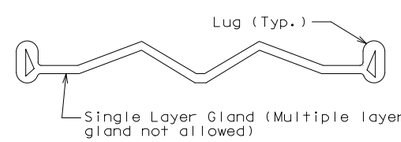


DETAIL OF GLAND

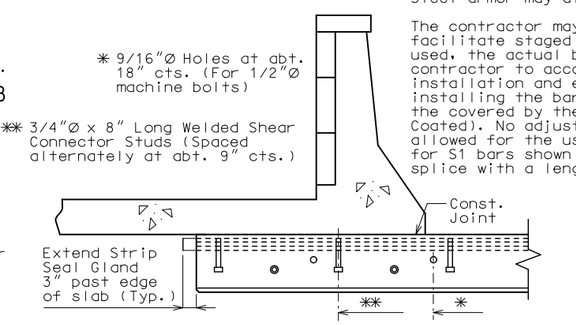


PART SECTION B-B

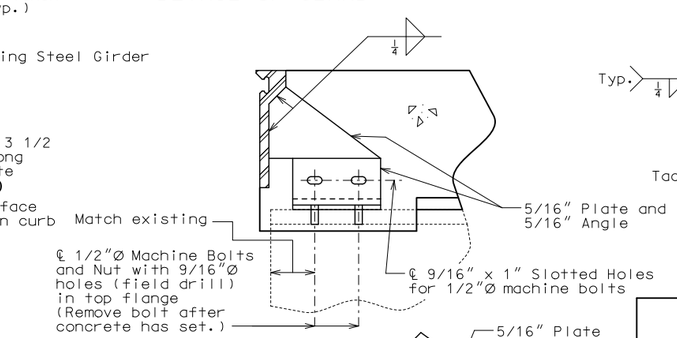


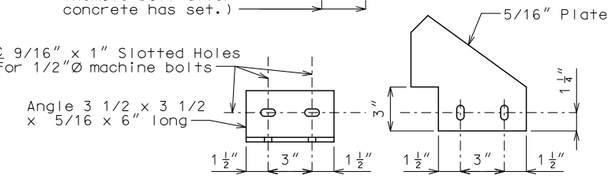


DETAIL B

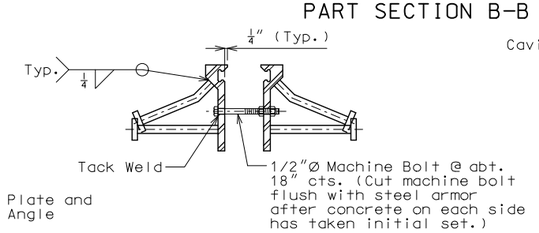


DETAIL A

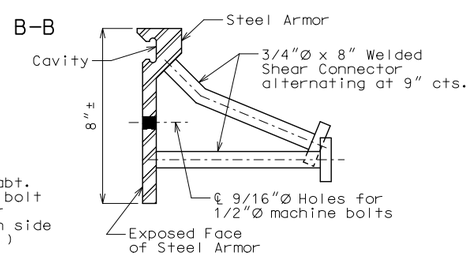


DETAIL OF JOINT ARMOR

## GENERAL NOTES:

Expansion joint system shall be fabricated in one section, except for staged construction and when the length is over 50 feet. A complete joint penetration groove welded splice shall be required. Welds shall be ground flush to provide a smooth surface. The expansion joint system shall be fabricated and installed to the crown and grade of the roadway.

The strip seal gland shall be installed in joints in one continuous piece without field splices. Factory splicing will be permitted for joints in excess of 53 feet.

Structural steel for the expansion joint system and sidewalk skid plate shall be ASTM A709 Grade 36 except the steel armor may be ASTM A709 Grade 50W. Anchors for the expansion joint system shall be in accordance with Sec 1037.

Strip seal expansion joint system shall be in accordance with Sec 717.

Structural steel for the expansion joint system and sidewalk skid plate shall be coated with a minimum of two coats of inorganic zinc primer (5 mils minimum) or galvanized in accordance with ASTM A123. Anchors need not be protected from overspray.

Longitudinal reinforcing steel shall be placed, bent or cut so that ends shall be 1" from the vertical leg of the steel armor at the expansion joint system.

Concrete shall be forced under and around steel armor and anchors. Proper consolidation of the concrete shall be achieved by localized internal vibration.

② The installation temperature shall be taken as the actual air temperature averaged over the 24-hour period immediately preceding installation.

③ MoDOT Construction personnel will indicate the strip seal expansion joint system installed.

Steel armor may also be referred to as extrusion or rail.

The contractor may use mechanical bar splices with the S1 bars to facilitate staged construction. When a mechanical bar splices is used, the actual bar segment length will be determined by the contractor to accommodate manufacturer's recommendations for installation and ease of construction. The cost of furnishing and installing the bar splices will be considered completely covered by the covered by the contract unit price for Reinforcing Steel (Epoxy Coated). No adjustment of the quantity of reinforcing steel will be allowed for the use of mechanical bar splices. The total bar length for S1 bars shown in Bill of Reinforcing Steel allows for one lap splice with a length of 4'-1".

### Table of Allowed Transverse Strip Seal Expansion Joint System

| Manufacturer | Strip Seal System (Designated Name) | Movement Parallel to RDWY | ① Allowed Installation Gap Normal to Joint at RDWY Surface @ Air/Surface Temperature ② | | | | | | ③ |
|---|---|---|---|---|---|---|---|---|---|
| | | | @ 40°F | @ 50°F | @ 60°F | @ 70°F | @ 80°F | @ 90°F | |
| D S Brown | Strip seal L2-400 | 1 3/8" | 2 3/16" | 2 1/8" | 2" | 1 7/8" | 1 13/16" | 1 11/16" | ☐ |
| Watson Bowman Acme (Wabo) | Strip seal SE-300 | 1 3/8" | 2 3/16" | 2 1/8" | 2" | 1 7/8" | 1 13/16" | 1 11/16" | ☐ |
| Watson Bowman Acme (Wabo) | Strip seal SE-400 | 1 3/8" | 2 3/16" | 2 1/8" | 2" | 1 7/8" | 1 13/16" | 1 11/16" | ☐ |

# DETAILS OF STRIP SEAL EXPANSION JOINT SYSTEM AT END BENT NO. 1

Note: This drawing is not to scale. Follow dimensions.

Sheet No. 2 of 4

Detailed Jan. 2020
Checked Jan. 2020

STATE OF MISSOURI
TRAVIS S. STUMP
NUMBER PE-2010000870
PROFESSIONAL ENGINEER
THIS SHEET HAS BEEN SIGNED, SEALED AND DATED ELECTRONICALLY.

| DATE PREPARED | |
|---|---|
| 2/18/2020 | |
| ROUTE 71 | STATE MO |
| DISTRICT BR | SHEET NO. 2 |
| COUNTY JACKSON | |
| JOB NO. J4P3266 | |
| CONTRACT ID. | |
| PROJECT NO. | |
| BRIDGE NO. A51801 | |

| DATE | DESCRIPTION |
|---|---|

IF A SEAL IS PRESENT ON THIS SHEET IT HAS BEEN ELECTRONICALLY SEALED AND DATED.

MISSOURI HIGHWAYS AND TRANSPORTATION COMMISSION
105 WEST CAPITOL
JEFFERSON CITY, MO 65102
1-888-ASK-MODOT (1-888-275-6636)

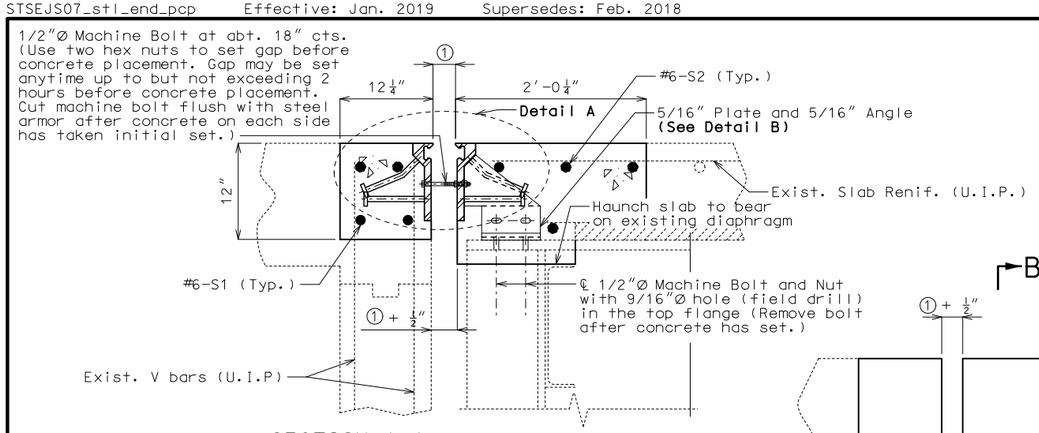


SECTION A-A

Note: Strip seal gland not shown for clarity.

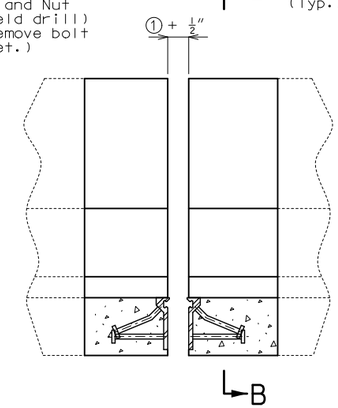


Note: Strip seal gland not shown for clarity.

PART ELEVATION OF BARRIER CURB

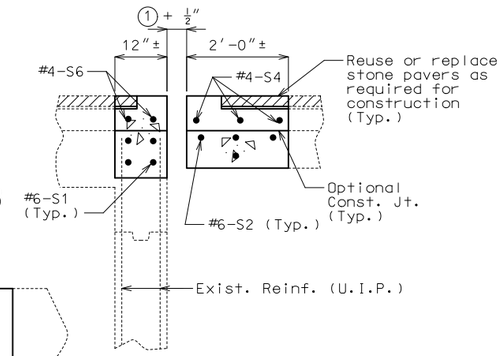


PART SECTION C-C

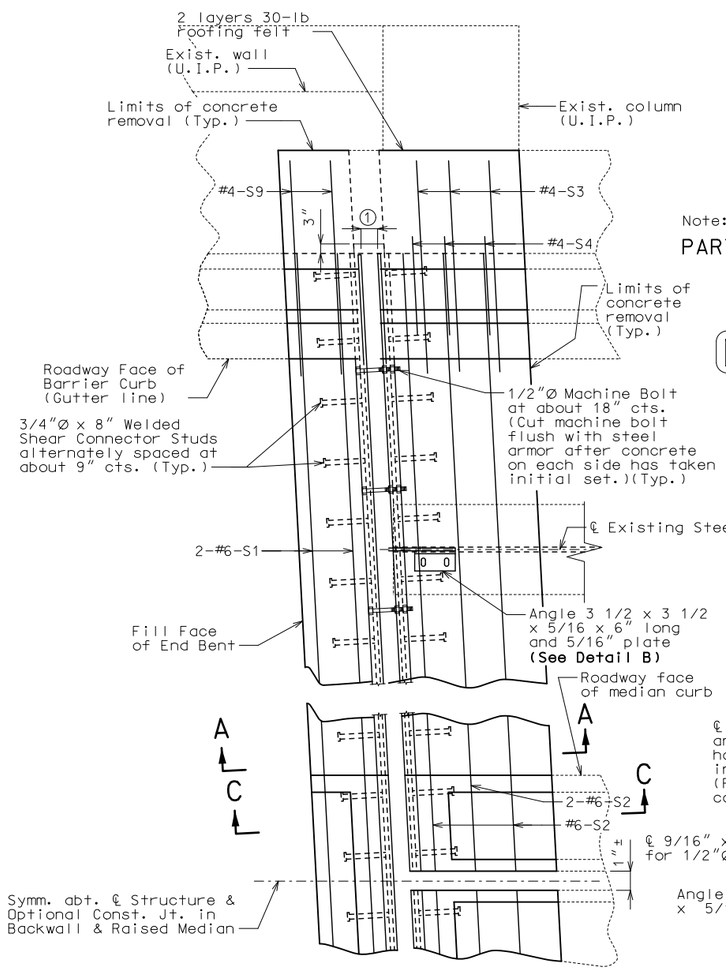


PART PLAN

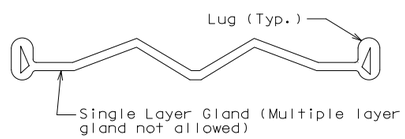


DETAIL OF GLAND

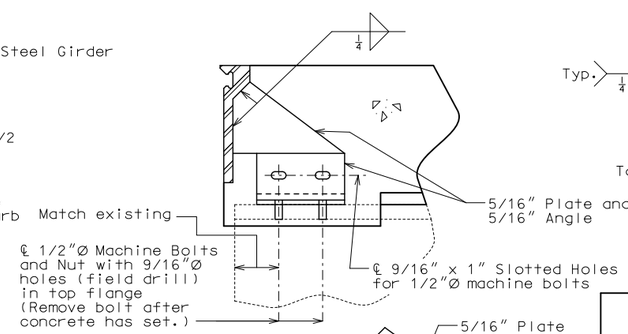


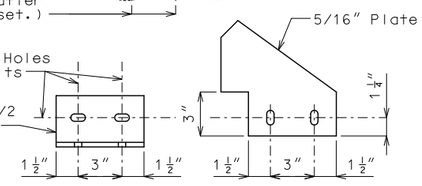


DETAIL B

## GENERAL NOTES:

Expansion joint system shall be fabricated in one section, except for staged construction and when the length is over 50 feet. A complete joint penetration groove welded splice shall be required. Welds shall be ground flush to provide a smooth surface. The expansion joint system shall be fabricated and installed to the crown and grade of the roadway.

The strip seal gland shall be installed in joints in one continuous piece without field splices. Factory splicing will be permitted for joints in excess of 53 feet.

Structural steel for the expansion joint system and sidewalk skid plate shall be ASTM A709 Grade 36 except the steel armor may be ASTM A709 Grade 50W. Anchors for the expansion joint system shall be in accordance with Sec 1037.

Strip seal expansion joint system shall be in accordance with Sec 717.

Structural steel for the expansion joint system and sidewalk skid plate shall be coated with a minimum of two coats of inorganic zinc primer (5 mils minimum) or galvanized in accordance with ASTM A123. Anchors need not be protected from overspray.

Longitudinal reinforcing steel shall be placed, bent or cut so that ends shall be 1" from the vertical leg of the steel armor at the expansion joint system.

Concrete shall be forced under and around steel armor and anchors. Proper consolidation of the concrete shall be achieved by localized internal vibration.

② The installation temperature shall be taken as the actual air temperature averaged over the 24-hour period immediately preceding installation.

③ MoDOT Construction personnel will indicate the strip seal expansion joint system installed.

Steel armor may also be referred to as extrusion or rail.

The contractor may use mechanical bar splices with the S1 and S2 bars to facilitate staged construction. When a mechanical bar splices is used, the actual bar segment length will be determined by the contractor to accommodate manufacturer's recommendations for installation and ease of construction. The cost of furnishing and installing the bar splices will be considered completely covered by the covered by the contract unit price for Reinforcing Steel (Epoxy Coated). No adjustment of the quantity of reinforcing steel will be allowed for the use of mechanical bar splices. The total bar length for S1 bars shown in Bill of Reinforcing Steel allows for one lap splice with a length of 4'-1". The S2 bars are shown in Bill of Reinforcing Steel as one continuous bar.

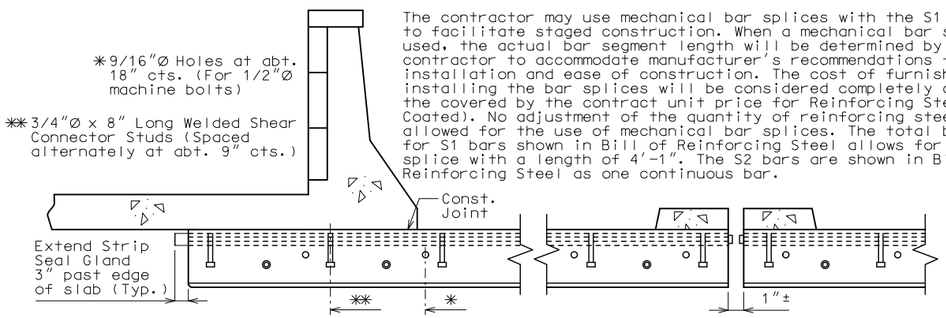


PART SECTION B-B

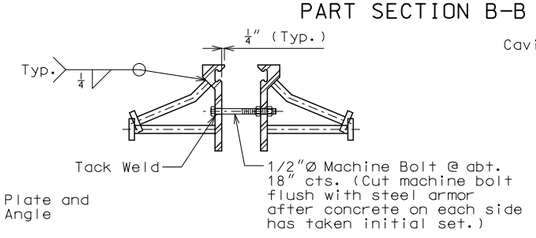


DETAIL A

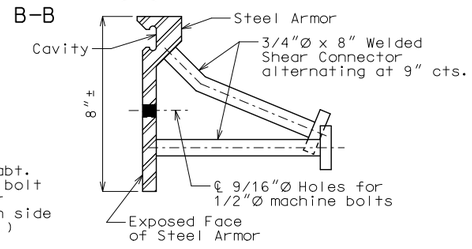


DETAIL OF JOINT ARMOR

### Table of Allowed Transverse Strip Seal Expansion Joint System

| Manufacturer | Strip Seal System (Designated Name) | Movement Parallel to RDWY | Allowed Installation Gap ① Normal to Joint at RDWY Surface @ Air/Surface Temperature ② | | | | | | ③ |
|---|---|---|---|---|---|---|---|---|---|
| | | | @ 40°F | @ 50°F | @ 60°F | @ 70°F | @ 80°F | @ 90°F | |
| D S Brown | Strip seal L2-400 | 1 3/8" | 2 3/16" | 2 1/8" | 2" | 1 7/8" | 1 13/16" | 1 11/16" | □ |
| Watson Bowman Acme (Wabo) | Strip seal SE-300 | 1 3/8" | 2 3/16" | 2 1/8" | 2" | 1 7/8" | 1 13/16" | 1 11/16" | □ |
| Watson Bowman Acme (Wabo) | Strip seal SE-400 | 1 3/8" | 2 3/16" | 2 1/8" | 2" | 1 7/8" | 1 13/16" | 1 11/16" | □ |

# DETAILS OF STRIP SEAL EXPANSION JOINT SYSTEM AT END ABUTMENT NO. 3

Detailed Jan. 2020
Checked Jan. 2020

Note: This drawing is not to scale. Follow dimensions.



STATE OF MISSOURI
TRAVIS S. STUMP
NUMBER PE-2010000870
PROFESSIONAL ENGINEER
THIS SHEET HAS BEEN SIGNED, SEALED AND DATED ELECTRONICALLY.

| DATE PREPARED | |
|---|---|
| 2/18/2020 | |
| ROUTE 71 | STATE MO |
| DISTRICT BR | SHEET NO. 3 |
| COUNTY JACKSON | |
| JOB NO. J4P3266 | |
| CONTRACT ID. | |
| PROJECT NO. | |
| BRIDGE NO. A51801 | |

| DATE | DESCRIPTION |
|---|---|

IF A SEAL IS PRESENT ON THIS SHEET IT HAS BEEN ELECTRONICALLY SEALED AND DATED.

MISSOURI HIGHWAYS AND TRANSPORTATION COMMISSION
105 WEST CAPITOL
JEFFERSON CITY, MO 65102
1-888-ASK-MODOT (1-888-275-6636)

# BILL OF REINFORCING STEEL

| NO. REQ'D. | MARK NO. SIZE | MARK NO. MARK | LOCATION | EPOXY (E) | SHAPE NO. | STIRRUP (S) | SUBSTR. (X) | VARIES (V) | NO. EACH | B FT. IN. | C FT. IN. | D FT. IN. | E FT. IN. | F FT. IN. | H FT. IN. | K FT. IN. | NOMINAL LENGTH FT. IN. | ACTUAL LENGTH FT. IN. | WEIGHT LBS. |
|---|---|---|---|---|---|---|---|---|---|---|---|---|---|---|---|---|---|---|---|
| | | | SLAB | | | | | | | | | | | | | | | | |
| 24 | 6 | S1 | SLAB | E | 20 | | | | | 45 2.000 | | | | | | | 45 2 | 45 2 | 1628 |
| 8 | 6 | S2 | SLAB | E | 20 | | | | | 42 11.000 | | | | | | | 42 11 | 42 11 | 516 |
| 12 | 4 | S3 | SIDEWALK | E | 9 | S | | | | 14.000 | 12.250 | 6 6.000 | | | 10.000 | 7.000 | 8 8 | 8 8 | 69 |
| 12 | 4 | S4 | SIDEWALK | E | 28 | S | | | | | 14.000 | 12.000 | 14.000 | | | | 3 4 | 3 2 | 25 |
| 6 | 4 | S5 | RAISED CURB | E | 10 | | | | | | 10.000 | 19.500 | | | | | 3 4 | 3 1 | 12 |
| 2 | 4 | S6 | RAISED CURB | E | 10 | | | | | | 10.000 | 3 8.000 | | | | | 5 4 | 5 2 | 7 |
| 4 | 4 | S7 | RAISED CURB | E | 20 | | | | | 2 5.000 | | | | | | | 2 5 | 2 5 | 6 |
| 4 | 4 | S8 | RAISED CURB | E | 20 | | | | | 13.000 | | | | | | | 0 13 | 0 13 | 3 |
| 8 | 4 | S9 | SIDEWALK | E | 20 | | | | | 6 3.000 | | | | | | | 6 3 | 6 3 | 33 |
| | | | BARRIER CURB | | | | | | | | | | | | | | | | |
| 20 | 5 | R1 | BARRIER CURB | E | 19 | S | | | | 2 6.000 | 3.500 | | | | | | 2 10 | 2 8 | 56 |
| 20 | 5 | R2 | BARRIER CURB | E | 15 | S | | | | 2 6.125 | 3.500 | | | | 2 6.000 | 3.000 | 2 10 | 2 9 | 57 |
| 20 | 5 | R3 | BARRIER CURB | E | 19 | S | | | | 17.000 | 6.000 | | | | | | 0 23 | 0 22 | 38 |
| 20 | 5 | R4 | BARRIER CURB | E | 27 | S | | | | | 6.000 | 11.125 | 7.000 | 12.000 | 9.125 | 6.375 | 3 0 | 2 10 | 59 |
| 20 | 5 | R5 | BARRIER CURB | E | 15 | S | | | | 2 0.125 | 11.000 | | | | 2 0.000 | 2.375 | 2 11 | 2 10 | 59 |
| | | | TOTALS | | | | | | | | | | | | | | | | |
| | 4 | | | E | | | | | | | | | | | | | | | 155 |
| | 5 | | | E | | | | | | | | | | | | | | | 269 |
| | 6 | | | E | | | | | | | | | | | | | | | 2144 |
| | | | TOTAL | | | | | | | | | | | | | | | | 0 |
| | | | TOTAL | E | | | | | | | | | | | | | | | 2568 |
| | | | Slab on Girder | | | | | | | | | | | | | | | | |
| | 4 | | | E | | | | | | | | | | | | | | | 155 |
| | 6 | | | E | | | | | | | | | | | | | | | 2144 |
| | | | TOTAL | | | | | | | | | | | | | | | | 2299 |
| | | | Safety Barrier Curb | | | | | | | | | | | | | | | | |
| | 5 | | | E | | | | | | | | | | | | | | | 269 |
| | | | TOTAL | | | | | | | | | | | | | | | | 269 |

# BILL OF REINFORCING STEEL

| NO. REQ'D. | MARK NO. SIZE | MARK NO. MARK | LOCATION | EPOXY (E) | SHAPE NO. | STIRRUP (S) | SUBSTR. (X) | VARIES (V) | NO. EACH | B FT. IN. | C FT. IN. | D FT. IN. | E FT. IN. | F FT. IN. | H FT. IN. | K FT. IN. | NOMINAL LENGTH FT. IN. | ACTUAL LENGTH FT. IN. | WEIGHT LBS. |
|---|---|---|---|---|---|---|---|---|---|---|---|---|---|---|---|---|---|---|---|

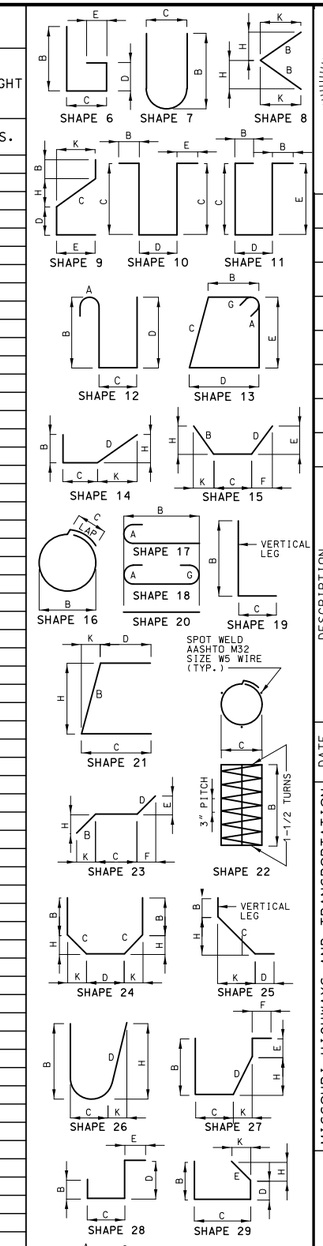


BENDING DIAGRAMS

STATE OF MISSOURI
TRAVIS S. STUMP
NUMBER PE-2010000870
PROFESSIONAL ENGINEER

THIS SHEET HAS BEEN SIGNED, SEALED AND DATED ELECTRONICALLY.

| | |
|---|---|
| DATE PREPARED | 2/18/2020 |
| ROUTE 71 | STATE MO |
| DISTRICT BR | SHEET NO. 4 |
| COUNTY | JACKSON |
| JOB NO. | J4P3266 |
| CONTRACT ID. | |
| PROJECT NO. | |
| BRIDGE NO. | A51801 |

| DESCRIPTION | DATE |
|---|---|
| | |

MISSOURI HIGHWAYS AND TRANSPORTATION COMMISSION
105 WEST CAPITOL
JEFFERSON CITY, MO 65102
1-888-ASK-MODOT (1-888-275-6636)

IF A SEAL IS PRESENT ON THIS SHEET IT HAS BEEN ELECTRONICALLY SEALED AND DATED.

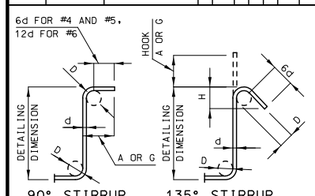


| STIRRUP HOOK DIMENSIONS | | | | |
|---|---|---|---|---|
| GRADES 40 - 50 - 60 KSI | | | | |
| BAR SIZE | D (IN.) | 90° HOOK | 135° HOOK | |
| | | HOOK A OR G | HOOK A OR G | APPROX. H |
| #4 | 2" | 4 1/2" | 4 1/2" | 3" |
| #5 | 2 1/2" | 6" | 5 1/2" | 3 3/4" |
| #6 | 4 1/2" | 12" | 8" | 4 1/2" |

NOTE: UNLESS OTHERWISE NOTED, DIAMETER "D" IS THE SAME FOR ALL BENDS AND HOOKS ON A BAR.

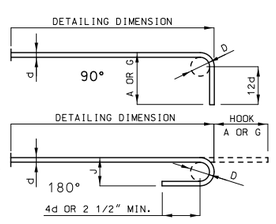


| END HOOK DIMENSIONS | | | | |
|---|---|---|---|---|
| BAR SIZE | D (IN.) | ALL GRADES | | |
| | | 180° HOOKS | | 90° HOOKS |
| | | A OR G | J | A OR G |
| #3 | 2 1/4" | 5" | 3" | 6" |
| #4 | 3" | 6" | 4" | 8" |
| #5 | 3 3/4" | 7" | 5" | 10" |
| #6 | 4 1/2" | 8" | 6" | 12" |
| #7 | 5 1/4" | 10" | 7" | 14" |
| #8 | 6" | 11" | 8" | 16" |
| #9 | 9 1/2" | 15" | 11 3/4" | 19" |
| #10 | 10 3/4" | 17" | 13 1/4" | 22" |
| #11 | 12" | 19" | 14 3/4" | 2'-0" |
| #14 | 18 1/4" | 2'-3" | 21 3/4" | 2'-7" |

**NOTE:**
ALL STANDARD HOOKS AND BENDS OTHER THAN 180 DEGREE ARE TO BE BENT WITH SAME PROCEDURE AS FOR 90 DEGREE STANDARD HOOKS.
HOOKS AND BENDS SHALL BE IN ACCORDANCE WITH THE PROCEDURES AS SHOWN ON THIS SHEET.
E = EPOXY COATED REINFORCEMENT.
S = STIRRUP.
X = BAR IS INCLUDED IN SUBSTRUCTURE QUANTITIES.
V = BAR DIMENSIONS VARY IN EQUAL INCREMENTS BETWEEN DIMENSIONS SHOWN ON THIS LINE AND THE FOLLOWING LINE.
NO. EA. = NUMBER OF BARS OF EACH LENGTH.
NOMINAL LENGTHS ARE BASED ON OUT TO OUT DIMENSIONS SHOWN IN BENDING DIAGRAMS AND ARE LISTED FOR FABRICATORS USE. (NEAREST INCH)
ACTUAL LENGTHS ARE MEASURED ALONG CENTERLINE BAR TO THE NEAREST INCH.
PAYWEIGHTS ARE BASED ON ACTUAL LENGTHS.
FOUR ANGLE OR CHANNEL SPACERS ARE REQUIRED FOR EACH COLUMN SPIRAL. SPACERS ARE TO BE PLACED ON INSIDE OF SPIRALS. LENGTH AND WEIGHT OF COLUMN SPIRALS DO NOT INCLUDE SPLICES OR SPACERS.
REINFORCING STEEL (GRADE 60) FY = 60,000 PSI.

Detailed Jan. 2020
Checked Jan. 2020

Note: This drawing is not to scale. Follow dimensions.

SEC/SUR 21&22 TWP 42N RGE 27W

# U.I.P. & REHABILITATE (93'-93') CONTINUOUS COMPOSITE PLATE GIRDER SPANS

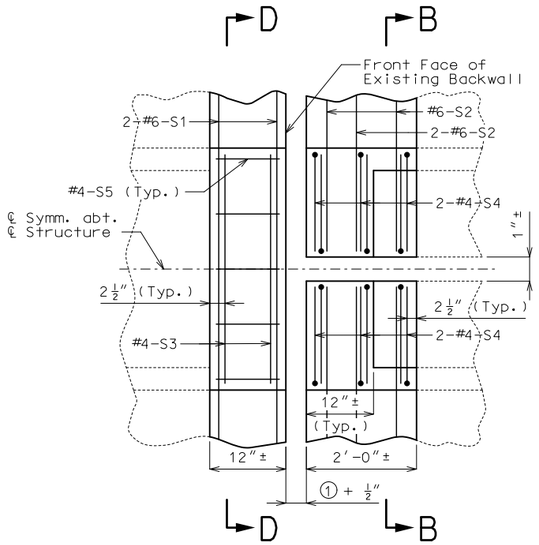


## PART PLAN OF RAISED MEDIAN CURB AT ABUTMENT NO. 1

(Stone pavers not shown) (Abutment No. 3 similar)

Note: Existing reinforcement & steel plate not shown for clarity

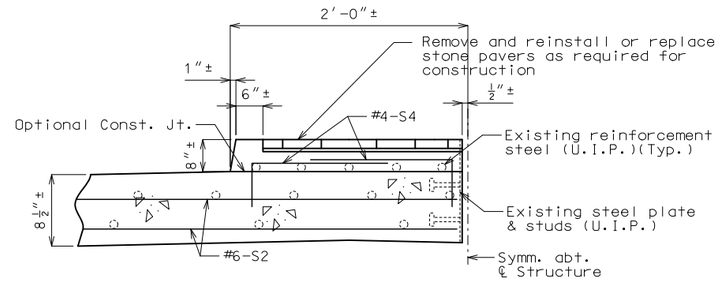


## SECTION B-B

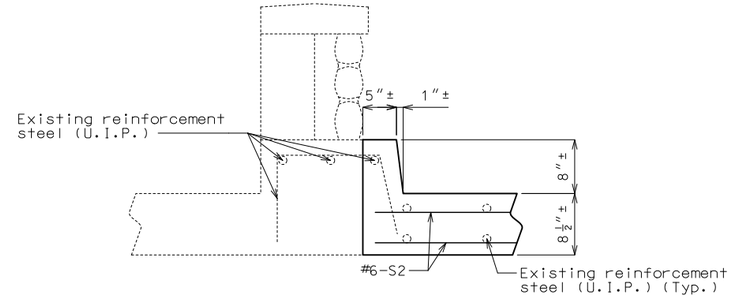


## PART SECTION C-C

Note: For location of Part Section C-C, see Sheet No. 2

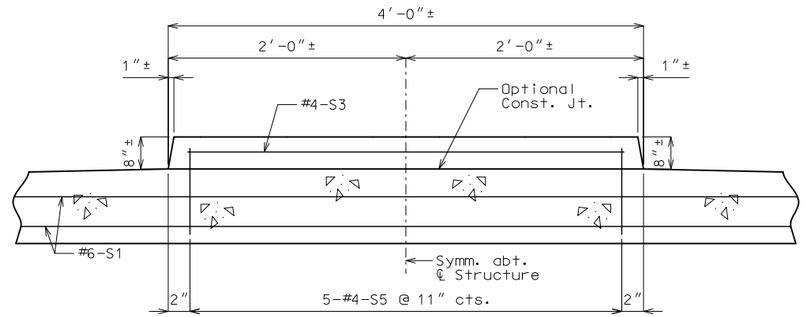


## SECTION D-D

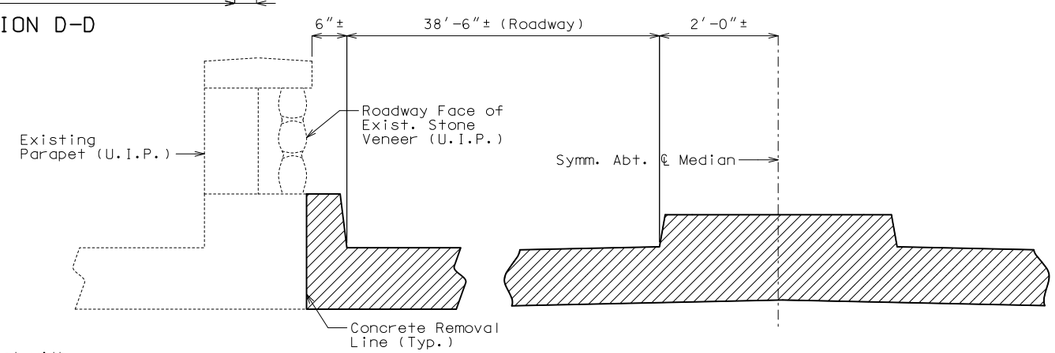


## PART SECTION THRU EXPANSION JOINT SHOWING REMOVAL OF CONCRETE

## General Notes:

**Design Specifications:**

2002 AASHTO LFD (17th Ed.) Standard Specifications
Bridge Deck Rating = 7

**Design Unit Stresses:**

| | |
|---|---|
| Class B-2 Concrete | f'c = 4,000 psi |
| Reinforing Steel | fy = 60,000 psi |

**Miscellaneous:**

Outline of old work is indicated by light dashed lines. Heavy lines indicate new work.

Contractor shall verify all dimensions in field before ordering new material.

The area exposed by the removal of concrete and not covered with new concrete shall be coated with an approved qualified special mortar in accordance with Sec 704.

Bars bonded in old conrete not removed shall be cleanly stripped and embedded into new concrete where possible. If length is available, old bars shal extend into the new concrete at least 40 diameters for plain bars and 30 diameters for deformed bars, unless otherwise noted.

The contractor may use mechanical bar splices with the S1 and S2 bars to facilitate staged construction. When a mechanical bar splices is used, the actual bar segment length will be determined by the contractor to accommodate manufacturer's recommendations for installation and ease of construction. The cost of furnishing and installing the bar splices will be considered completely covered by the covered by the contract unit price for Reinforcing Steel (Epoxy Coated). No adjustment of the quantity of reinforcing steel will be allowed for the use of mechanical bar splices. The total bar length for S1 bars shown in Bill of Reinforcing Steel allows for one lap splice with a length of 4'-1". The S2 bars are shown in Bill of Reinforcing Steel as one continuous bar.

Payment for raised median curb removal and all new concrete and reinforcement for raised median curb, complete in place, will be considered completely covered by the contract unit price for Remove and Replace Raised Median Curb.

Minimum clearance to reinforcing steel shall be 1½", unless otherwsie shown.

**Traffic Handling:**

Traffic to be maintained on structure during construction. See roadway plans for traffic control.

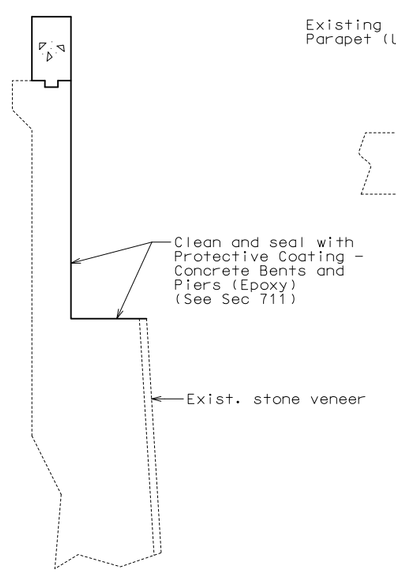


## PART SECTION THRU ABUTMENTS NO. 1 & 3 SHOWING PROTECTIVE COATING

### Estimated Quantities

| Item | | Total |
|---|---|---|
| Removal of Existing Expansion Joint & Adjacent Concrete | linear foot | 162 |
| Remove and Replace Raised Median Curb | sq. foot | 24 |
| Class B-2 Concrete | cu. yard | 15.3 |
| Reinforcing Steel (Epoxy Coated) | pound | 2080 |
| Protective Coating - Concrete Bents and Piers (Epoxy) | lump sum | 1 |
| Strip Seal Expansion Joint System | linear foot | 162 |

## REPAIRS TO BRIDGE: ROUTE LINWOOD BLVD OVER BRUCE R WATKINS DR. (RTE 71)

ROUTE LINWOOD BLVD FROM PROSPECT TO ROUTE 71
ABOUT 0.4 MILE EAST OF PROSPECT AVE
BEG. STA. 5+99.00± (Match Existing) (Linwood Blvd.)

STD. 617.20
STD. 706.35

Detailed Sep. 2019
Checked Jan. 2020

Note: This drawing is not to scale. Follow dimensions.



STATE OF MISSOURI
TRAVIS S. STUMP
NUMBER PE-2010000870
PROFESSIONAL ENGINEER
THIS SHEET HAS BEEN SIGNED, SEALED AND DATED ELECTRONICALLY.

DATE PREPARED 2/18/2020
ROUTE 71 | STATE MO
DISTRICT BR | SHEET NO. 1
COUNTY JACKSON
JOB NO. J4P3266
CONTRACT ID.
PROJECT NO.
BRIDGE NO. A51811

DESCRIPTION | DATE

IF A SEAL IS PRESENT ON THIS SHEET IT HAS BEEN ELECTRONICALLY SEALED AND DATED.

MISSOURI HIGHWAYS AND TRANSPORTATION COMMISSION
105 WEST CAPITOL
JEFFERSON CITY, MO 65102
1-888-ASK-MODOT (1-888-275-6636)

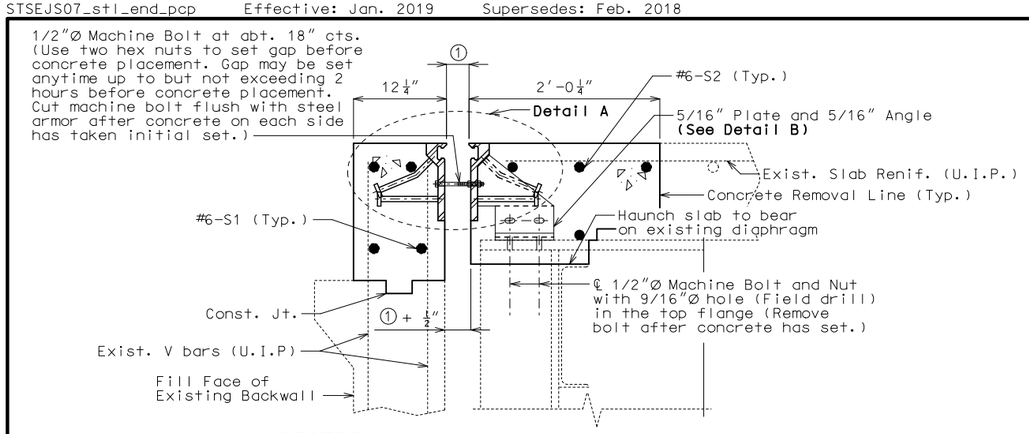


SECTION A-A

Note: Strip seal gland not shown for clarity.

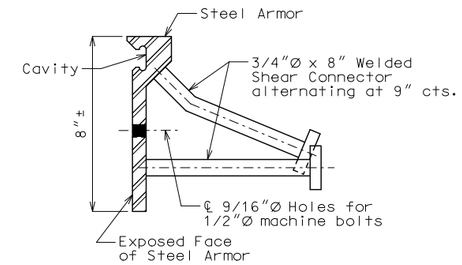


DETAIL OF JOINT ARMOR

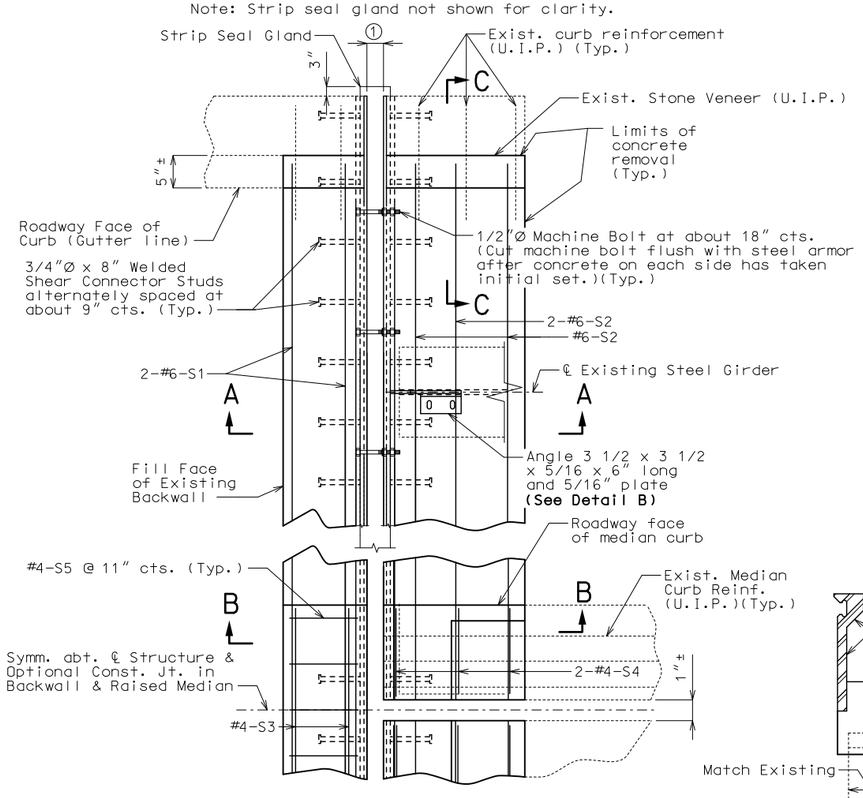


PART PLAN

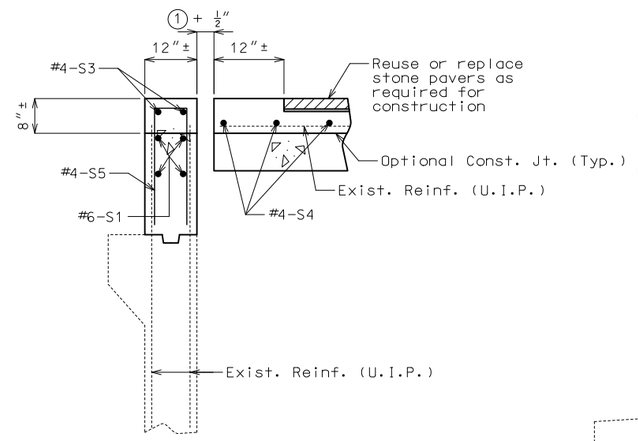


PART SECTION B-B

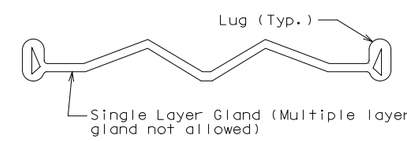


DETAIL OF GLAND

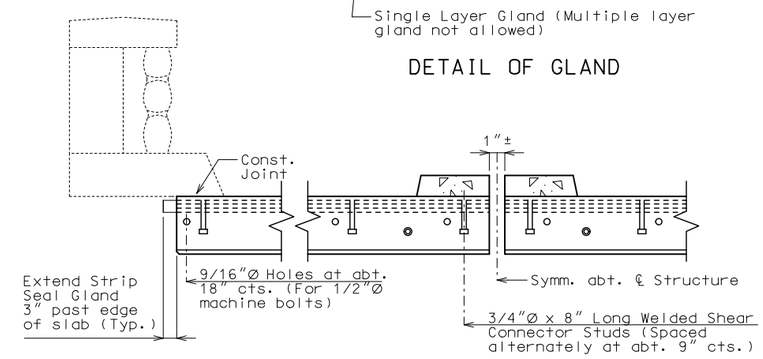


PART SECTION THRU STRIP SEAL

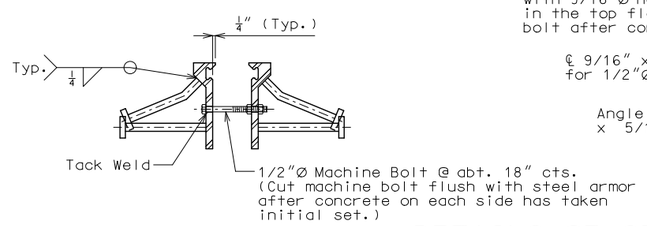


DETAIL A

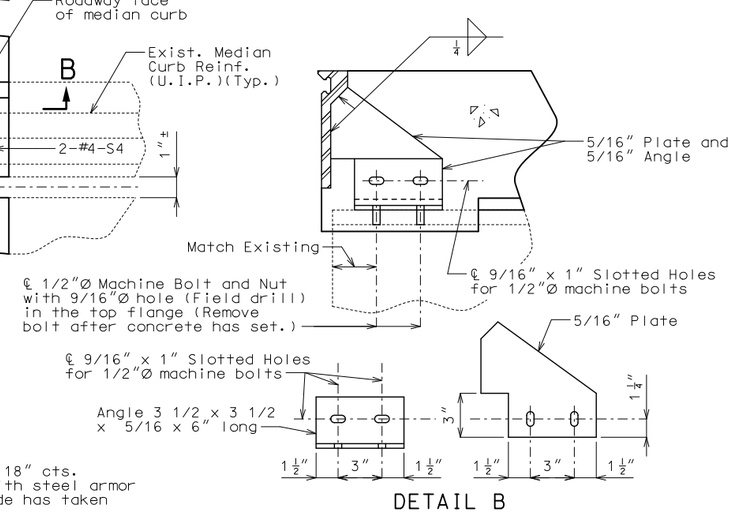


DETAIL B

## GENERAL NOTES:

Expansion joint system shall be fabricated in one section, except for staged construction and when the length is over 50 feet. A complete joint penetration groove welded splice shall be required. Welds shall be ground flush to provide a smooth surface. The expansion joint system shall be fabricated and installed to the crown and grade of the roadway.

The strip seal gland shall be installed in joints in one continuous piece without field splices. Factory splicing will be permitted for joints in excess of 53 feet.

Structural steel for the expansion joint system shall be ASTM A709 Grade 36 except the steel armor may be ASTM A709 Grade 50W. Anchors for the expansion joint system shall be in accordance with Sec 1037. Strip seal expansion joint system shall be in accordance with Sec 717.

Structural steel for the expansion joint system shall be coated with a minimum of two coats of inorganic zinc primer (5 mils minimum) or galvanized in accordance with ASTM A123. Anchors need not be protected from overspray.

Longitudinal reinforcing steel shall be placed, bent or cut so that ends shall be 1" from the vertical leg of the steel armor at the expansion joint system.

Concrete shall be forced under and around steel armor and anchors. Proper consolidation of the concrete shall be achieved by localized internal vibration.

② The installation temperature shall be taken as the actual air temperature averaged over the 24-hour period immediately preceding installation.

③ MoDOT Construction personnel will indicate the strip seal expansion joint system installed.

Steel armor may also be referred to as extrusion or rail.

Table of Allowed Transverse Strip Seal Expansion Joint System

| Manufacturer | Strip Seal System (Designated Name) | Movement Parallel to RDWY | ① Allowed Installation Gap Normal to Joint at RDWY Surface @ Air/Surface Temperature ② | | | | | | ③ |
|---|---|---|---|---|---|---|---|---|---|
| | | | @ 40°F | @ 50°F | @ 60°F | @ 70°F | @ 80°F | @ 90°F | |
| D S Brown | Strip seal L2-400 | 1" | 2 1/8" | 2 1/16" | 2" | 1 15/16" | 1 7/8" | 1 13/16" | ☐ |
| Watson Bowman Acme (Wabo) | Strip seal SE-300 | 1" | 2 1/8" | 2 1/16" | 2" | 1 15/16" | 1 7/8" | 1 13/16" | ☐ |
| Watson Bowman Acme (Wabo) | Strip seal SE-400 | 1" | 2 1/8" | 2 1/16" | 2" | 1 15/16" | 1 7/8" | 1 13/16" | ☐ |

# DETAILS OF STRIP SEAL EXPANSION JOINT SYSTEM AT END ABUTMENT NO. 1 & 3

Detailed Sep. 2019
Checked Jan. 2020

Note: This drawing is not to scale. Follow dimensions.



STATE OF MISSOURI
TRAVIS S. STUMP
NUMBER PE-2010000870
PROFESSIONAL ENGINEER
THIS SHEET HAS BEEN SIGNED, SEALED AND DATED ELECTRONICALLY.

DATE PREPARED 2/18/2020

| ROUTE | STATE |
|---|---|
| 71 | MO |
| DISTRICT | SHEET NO. |
| BR | 2 |

COUNTY JACKSON
JOB NO. J4P3266
CONTRACT ID.
PROJECT NO.
BRIDGE NO. A51811

| DATE | DESCRIPTION |
|---|---|

IF A SEAL IS PRESENT ON THIS SHEET IT HAS BEEN ELECTRONICALLY SEALED AND DATED.

MISSOURI HIGHWAYS AND TRANSPORTATION COMMISSION
105 WEST CAPITOL
JEFFERSON CITY, MO 65102
1-888-ASK-MODOT (1-888-275-6636)

# BILL OF REINFORCING STEEL

| NO. REQ'D. | MARK NO. SIZE | MARK NO. MARK | LOCATION | EPOXY (E) | SHAPE NO. | STIRRUP (S) | SUBSTR. (X) | VARIES (V) | NO. EACH | B FT. IN. | C FT. IN. | D FT. IN. | E FT. IN. | F FT. IN. | H FT. IN. | K FT. IN. | NOMINAL LENGTH FT. IN. | ACTUAL LENGTH FT. IN. | WEIGHT LBS. |
|---|---|---|---|---|---|---|---|---|---|---|---|---|---|---|---|---|---|---|---|
| | | | SLAB | | | | | | | | | | | | | | | | |
| 16 | 6 | S1 | SLAB | E | 20 | | | | | 42 11.000 | | | | | | | 42 11 | 42 11 | 1031 |
| 16 | 6 | S2 | SLAB | E | 20 | | | | | 40 9.000 | | | | | | | 40 9 | 40 9 | 979 |
| 4 | 4 | S3 | MEDIAN | E | 20 | | | | | 3 6.000 | | | | | | | 3 6 | 3 6 | 9 |
| 24 | 4 | S4 | MEDIAN | E | 19 | S | | | | 10.000 | 18.000 | | | | | | 2 4 | 2 3 | 36 |
| 10 | 4 | S5 | MEDIAN | E | 10 | S | | | | | 21.000 | 9.000 | | | | | 4 3 | 4 1 | 27 |
| | | | TOTALS | | | | | | | | | | | | | | | | |
| | 4 | | | E | | | | | | | | | | | | | | | 72 |
| | 6 | | | E | | | | | | | | | | | | | | | 2010 |
| | | | TOTAL | | | | | | | | | | | | | | | | 0 |
| | | | TOTAL | E | | | | | | | | | | | | | | | 2082 |
| | | | Slab on Girder | | | | | | | | | | | | | | | | |
| | 4 | | | E | | | | | | | | | | | | | | | 72 |
| | 6 | | | E | | | | | | | | | | | | | | | 2010 |
| | | | TOTAL | | | | | | | | | | | | | | | | 2082 |

# BILL OF REINFORCING STEEL

| NO. REQ'D. | MARK NO. SIZE | MARK NO. MARK | LOCATION | EPOXY (E) | SHAPE NO. | STIRRUP (S) | SUBSTR. (X) | VARIES (V) | NO. EACH | B FT. IN. | C FT. IN. | D FT. IN. | E FT. IN. | F FT. IN. | H FT. IN. | K FT. IN. | NOMINAL LENGTH FT. IN. | ACTUAL LENGTH FT. IN. | WEIGHT LBS. |
|---|---|---|---|---|---|---|---|---|---|---|---|---|---|---|---|---|---|---|---|

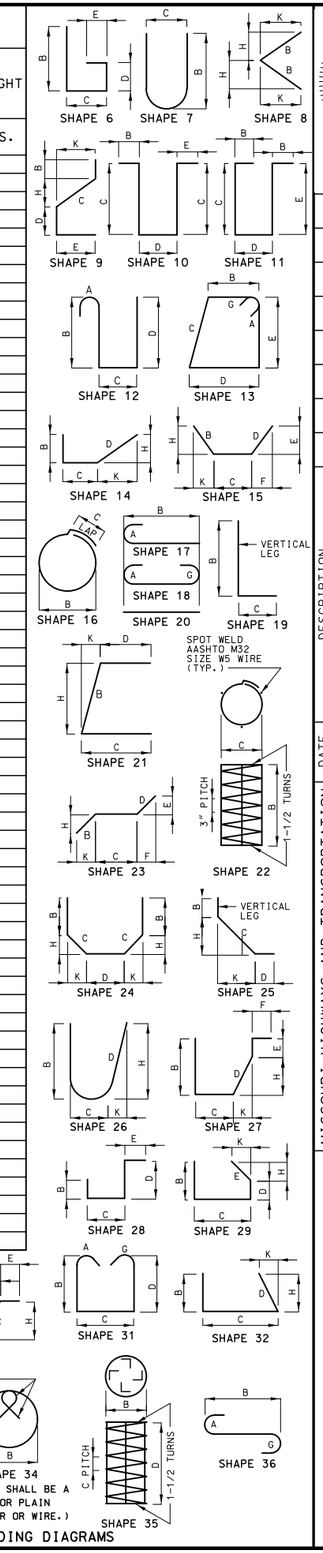


BENDING DIAGRAMS

STATE OF MISSOURI
TRAVIS S. STUMP
NUMBER PE-2010000870
PROFESSIONAL ENGINEER

THIS SHEET HAS BEEN SIGNED, SEALED AND DATED ELECTRONICALLY.

| | |
|---|---|
| DATE PREPARED | 2/18/2020 |
| ROUTE 71 | STATE MO |
| DISTRICT BR | SHEET NO. 3 |
| COUNTY | JACKSON |
| JOB NO. | J4P3266 |
| CONTRACT ID. | |
| PROJECT NO. | |
| BRIDGE NO. | A51811 |

DESCRIPTION

DATE

MISSOURI HIGHWAYS AND TRANSPORTATION COMMISSION

105 WEST CAPITOL
JEFFERSON CITY, MO 65102
1-888-ASK-MODOT (1-888-275-6636)

IF A SEAL IS PRESENT ON THIS SHEET IT HAS BEEN ELECTRONICALLY SEALED AND DATED.

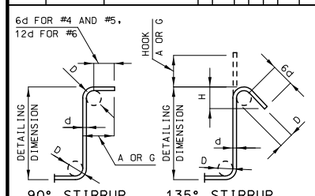


| STIRRUP HOOK DIMENSIONS | | | | |
|---|---|---|---|---|
| GRADES 40 - 50 - 60 KSI | | | | |
| BAR SIZE | D (IN.) | 90° HOOK: HOOK A OR G | 135° HOOK: HOOK A OR G | 135° HOOK: APPROX. H |
| #4 | 2" | 4 1/2" | 4 1/2" | 3" |
| #5 | 2 1/2" | 6" | 5 1/2" | 3 3/4" |
| #6 | 4 1/2" | 12" | 8" | 4 1/2" |

NOTE: UNLESS OTHERWISE NOTED, DIAMETER "D" IS THE SAME FOR ALL BENDS AND HOOKS ON A BAR.

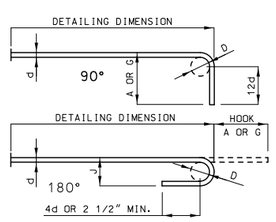


| END HOOK DIMENSIONS | | | | |
|---|---|---|---|---|
| BAR SIZE | D (IN.) | ALL GRADES: 180° HOOKS: A OR G | ALL GRADES: 180° HOOKS: J | ALL GRADES: 90° HOOKS: A OR G |
| #3 | 2 1/4" | 5" | 3" | 6" |
| #4 | 3" | 6" | 4" | 8" |
| #5 | 3 3/4" | 7" | 5" | 10" |
| #6 | 4 1/2" | 8" | 6" | 12" |
| #7 | 5 1/4" | 10" | 7" | 14" |
| #8 | 6" | 11" | 8" | 16" |
| #9 | 9 1/2" | 15" | 11 3/4" | 19" |
| #10 | 10 3/4" | 17" | 13 1/4" | 22" |
| #11 | 12" | 19" | 14 3/4" | 2'-0" |
| #14 | 18 1/4" | 2'-3" | 21 3/4" | 2'-7" |

**NOTE:**
ALL STANDARD HOOKS AND BENDS OTHER THAN 180 DEGREE ARE TO BE BENT WITH SAME PROCEDURE AS FOR 90 DEGREE STANDARD HOOKS.
HOOKS AND BENDS SHALL BE IN ACCORDANCE WITH THE PROCEDURES AS SHOWN ON THIS SHEET.
E = EPOXY COATED REINFORCEMENT.
S = STIRRUP.
X = BAR IS INCLUDED IN SUBSTRUCTURE QUANTITIES.
V = BAR DIMENSIONS VARY IN EQUAL INCREMENTS BETWEEN DIMENSIONS SHOWN ON THIS LINE AND THE FOLLOWING LINE.
NO. EA. = NUMBER OF BARS OF EACH LENGTH.
NOMINAL LENGTHS ARE BASED ON OUT TO OUT DIMENSIONS SHOWN IN BENDING DIAGRAMS AND ARE LISTED FOR FABRICATORS USE. (NEAREST INCH)
ACTUAL LENGTHS ARE MEASURED ALONG CENTERLINE BAR TO THE NEAREST INCH.
PAYWEIGHTS ARE BASED ON ACTUAL LENGTHS.
FOUR ANGLE OR CHANNEL SPACERS ARE REQUIRED FOR EACH COLUMN SPIRAL. SPACERS ARE TO BE PLACED ON INSIDE OF SPIRALS. LENGTH AND WEIGHT OF COLUMN SPIRALS DO NOT INCLUDE SPLICES OR SPACERS.
REINFORCING STEEL (GRADE 60) FY = 60,000 PSI.

Detailed Jan. 2020
Checked Jan. 2020

Note: This drawing is not to scale. Follow dimensions.

SEC/SUR 21 TWP 11S RGE 33W

# U.I.P. & REHABILITATE (103'-114') CONTINUOUS COMPOSITE PLATE GIRDER SPANS

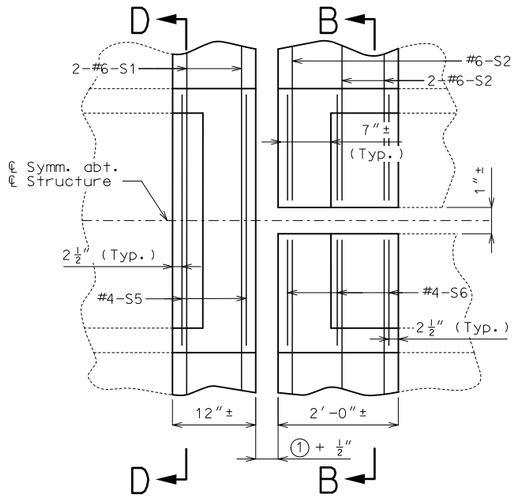


PART PLAN OF RAISED MEDIAN CURB AT ABUTMENT NO. 1

(Stone pavers & exist. reinforcement not shown for clarity)

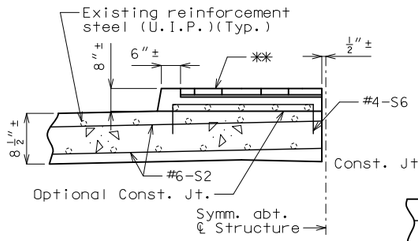


SECTION B-B

✱✱ Remove and reinstall or replace stone pavers as required for construction

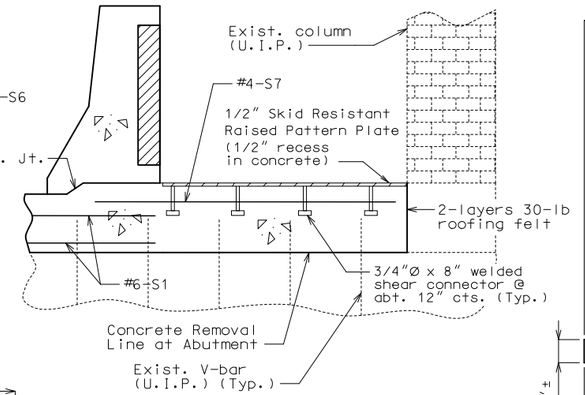


SECTION C-C THRU SIDEWALK AT ABUTMENT

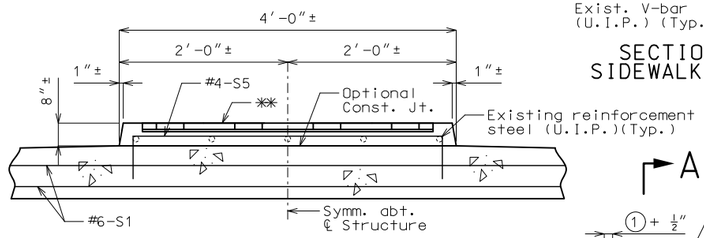


SECTION D-D

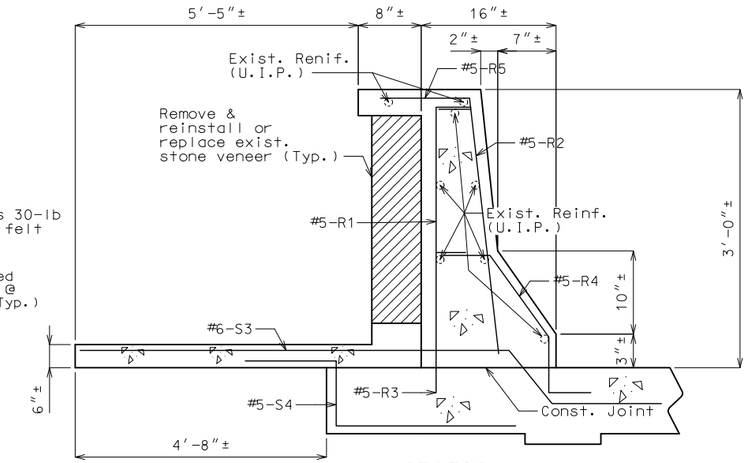


SECTION A-A

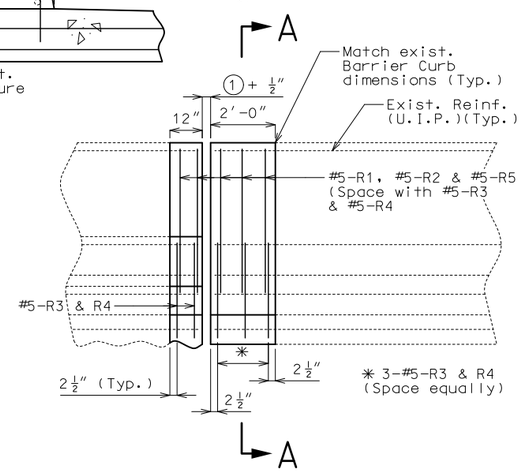


PART ELEVATION OF BARRIER CURB

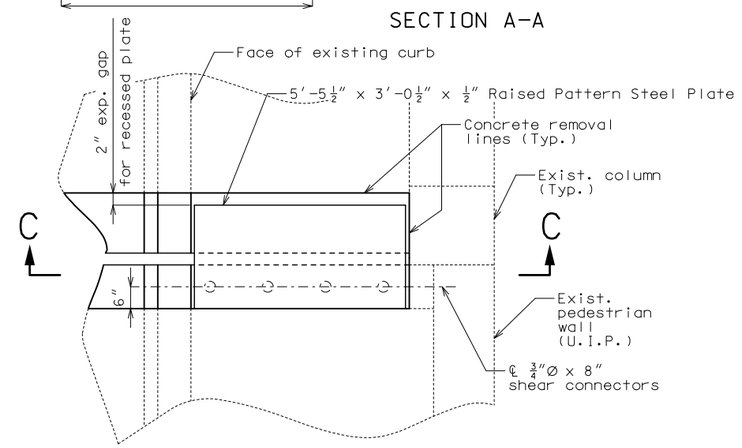


TYPICAL PART PLAN OF RIGHT SIDEWALK AT ABUTMENT NO. 1

(Skid plate shown)

(Left sidewalk similar and both sidewalks at End Bent No. 3 similar)

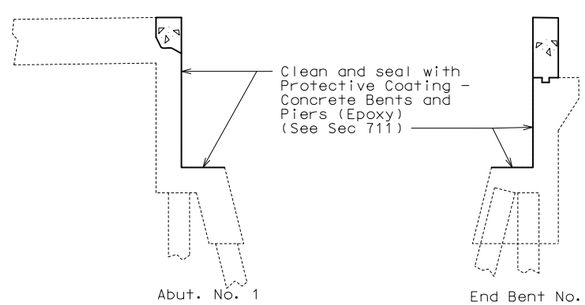


PART SECTION THRU ABUTMENT/END BENT SHOWING PROTECTIVE COATING

## General Notes:

**Design Specifications:**

2002 AASHTO LFD (17th Ed.) Standard Specifications
Bridge Deck Rating = 7

**Design Unit Stresses:**

Class B-2 Concrete f'c = 4,000 psi
Reinforcing Steel fy = 60,000 psi

**Miscellaneous:**

Outline of old work is indicated by light dashed lines. Heavy lines indicate new work.

Contractor shall verify all dimensions in field before ordering new material.

Bars bonded in old concrete not removed shall be cleanly stripped and embedded into new concrete where possible. If length is available, old bars shall extend into new concrete at least 40 diameters for plain bars and 30 diameters for deformed bars, unless otherwise noted.

The area exposed by the removal of concrete and not covered with new concrete shall be coated with an approved qualified special mortar in accordance with Sec 704.

Cost of furnishing and installing sidewalk skid plates will be considered completely covered by the contract unit price for Strip Seal Expansion Joint System.

For general specifications of raised pattern steel plate, see Sheet No. 2.

Reinstall any lighting standard electrical wiring and conduit removed during construction (payment for labor and materials will be considered completely covered by the contract unit price of other items).

Payment for barrier curb removal and all new concrete and reinforcement for barrier curb, complete in place, will be considered completely covered by the contract unit price for Remove and Replace Barrier Curb.

Payment for raised median curb removal and all new concrete and reinforcement for raised median curb, complete in place, will be considered completely covered by the contract unit price for Remove and Replace Raised Median Curb.

Minimum clearance to reinforcing steel shall be 1½", unless otherwise shown.

**Traffic Handling:**

Traffic to be maintained on structure during construction. See roadway plans for traffic control.

## Estimated Quantities

| ITEM | | TOTAL |
|---|---|---|
| Removal of Existing Expansion Joint & Adjacent Concrete | linear foot | 192 |
| Remove and Replace Barrier Curb | linear foot | 12 |
| Remove and Replace Rasied Median Curb | sq. foot | 24 |
| Class B-2 Concrete | cu. yard | 17.2 |
| Reinforcing Steel (Epoxy Coated) | pound | 2900 |
| Protective Coating - Concrete Bents and Piers (Epoxy) | lump sum | 1 |
| Strip Seal Expansion Joint System | linear foot | 162 |

REPAIRS TO BRIDGE: ROUTE 39TH STREET OVER BRUCE R. WATKINS DR. (RTE. 71)

ROUTE 39TH STREET FROM PASEO BLVD. TO RTE. 71
ABOUT 0.3 MILE WEST OF PASEC BLVD.
BEG. STA. 5+06.50± (MATCH EXISTING) (39TH STREET)

STD. 617.20
STD. 706.35

STATE OF MISSOURI
TRAVIS S. STUMP
NUMBER PE-2010000870
PROFESSIONAL ENGINEER
THIS SHEET HAS BEEN SIGNED, SEALED AND DATED ELECTRONICALLY.

DATE PREPARED 2/18/2020
ROUTE 71 STATE MO
DISTRICT BR SHEET NO. 1
COUNTY JACKSON
JOB NO. J4P3266
CONTRACT ID.
PROJECT NO.
BRIDGE NO. A51831

DESCRIPTION
DATE

IF A SEAL IS PRESENT ON THIS SHEET IT HAS BEEN ELECTRONICALLY SEALED AND DATED.

MISSOURI HIGHWAYS AND TRANSPORTATION COMMISSION
105 WEST CAPITOL
JEFFERSON CITY, MO 65102
1-888-ASK-MODOT (1-888-275-6636)

Detailed Sep. 2019
Checked Jan. 2020

Note: This drawing is not to scale. Follow dimensions.

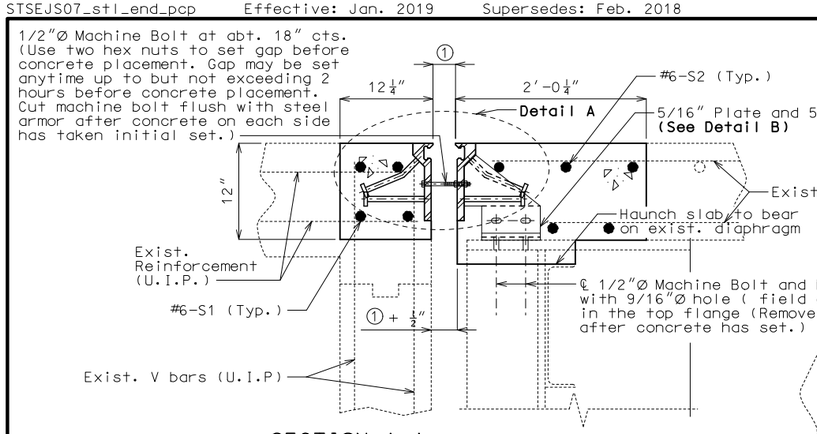


SECTION A-A

Note: Strip seal gland not shown for clarity.

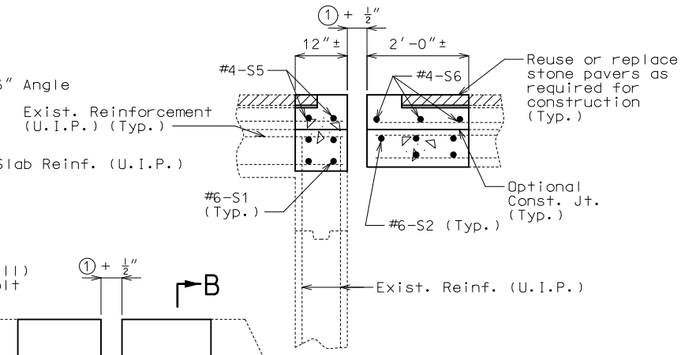


PART SECTION C-C

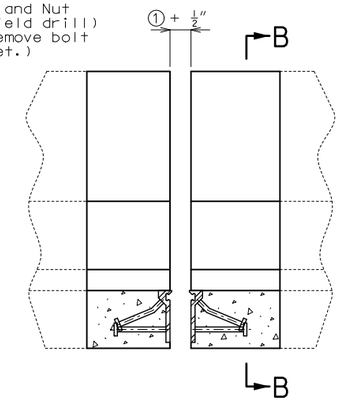


Note: Strip seal gland not shown for clarity.

PART ELEVATION OF BARRIER CURB

## GENERAL NOTES:

Expansion joint system shall be fabricated in one section, except for staged construction and when the length is over 50 feet. A complete joint penetration groove welded splice shall be required. Welds shall be ground flush to provide a smooth surface. The expansion joint system shall be fabricated and installed to the crown and grade of the roadway.

The strip seal gland shall be installed in joints in one continuous piece without field splices. Factory splicing will be permitted for joints in excess of 53 feet.

Structural steel for the expansion joint system and sidewalk skid plate shall be ASTM A709 Grade 36 except the steel armor may be ASTM A709 Grade 50W. Anchors for the expansion joint system shall be in accordance with Sec 1037.

Strip seal expansion joint system shall be in accordance with Sec 717.

Structural steel for the expansion joint system and sidewalk skid plate shall be coated with a minimum of two coats of inorganic zinc primer (5 mils minimum) or galvanized in accordance with ASTM A123. Anchors need not be protected from overspray.

Longitudinal reinforcing steel shall be placed, bent or cut so that ends shall be 1" from the vertical leg of the steel armor at the expansion joint system.

Concrete shall be forced under and around steel armor and anchors. Proper consolidation of the concrete shall be achieved by localized internal vibration.

② The installation temperature shall be taken as the actual air temperature averaged over the 24-hour period immediately preceding installation.

③ MoDOT Construction personnel will indicate the strip seal expansion joint system installed.

Steel armor may also be referred to as extrusion or rail.

The contractor may use mechanical bar splices with the S1 and S2 bars to facilitate staged construction. When a mechanical bar splices is used, the actual bar segment length will be determined by the contractor to accommodate manufacturer's recommendations for installation and ease of construction. The cost of furnishing and installing the bar splices will be considered completely covered by the covered by the contract unit price for Reinforcing Steel (Epoxy Coated). No adjustment of the quantity of reinforcing steel will be allowed for the use of mechanical bar splices. The total bar length for S1 bars shown in Bill of Reinforcing Steel allows for one lap splice with a length of 4'-1". The S2 bars are shown in Bill of Reinforcing Steel as one continuous bar.

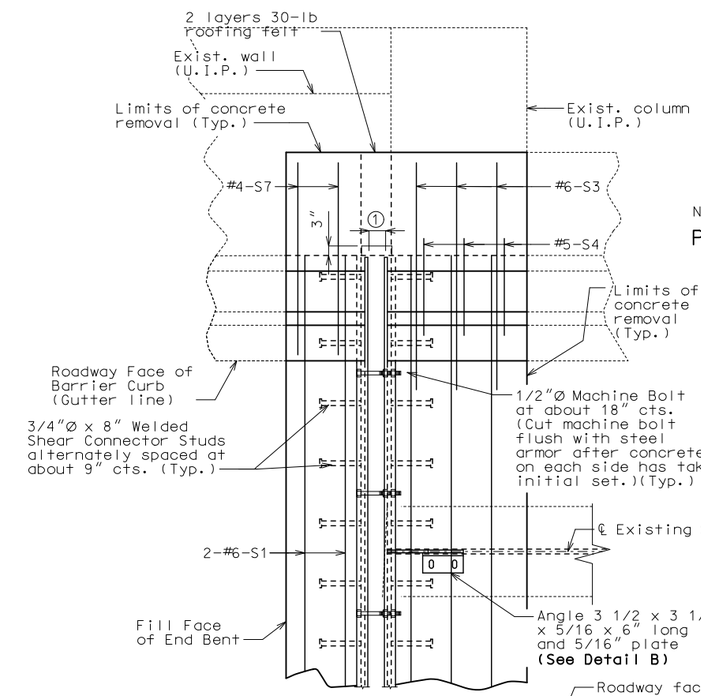


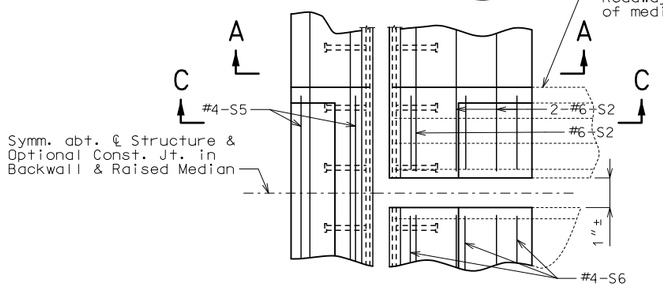


PART PLAN

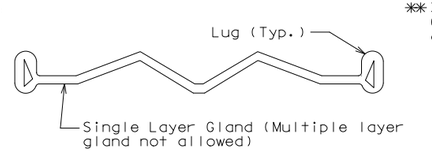


DETAIL OF GLAND

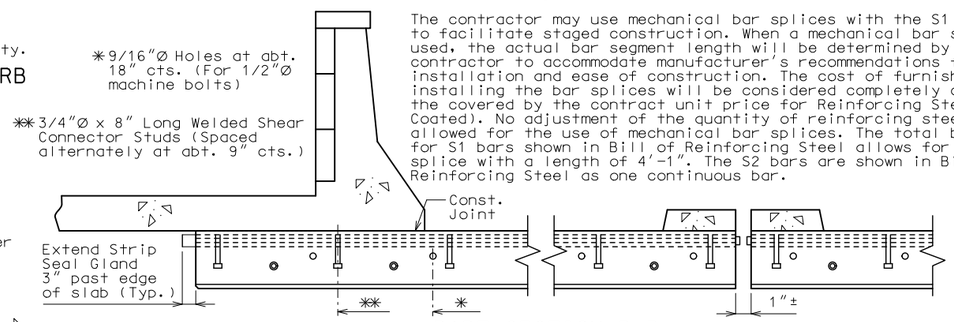


PART SECTION B-B

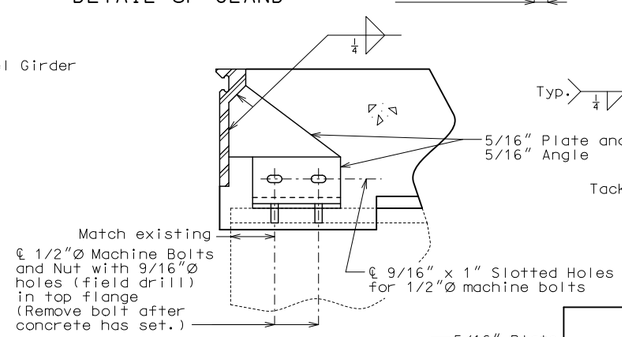


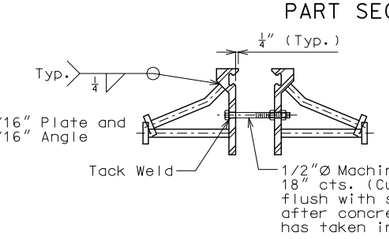


DETAIL A

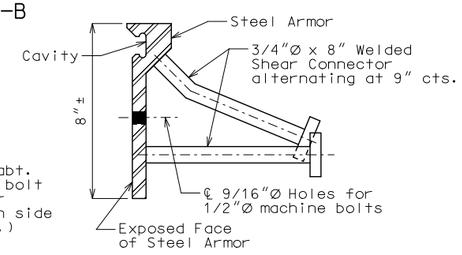


DETAIL OF JOINT ARMOR

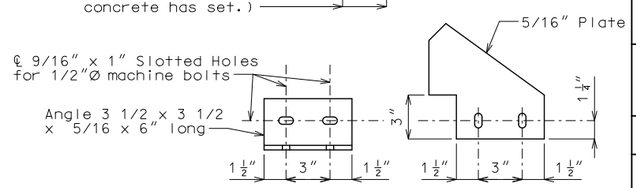


DETAIL B

### Table of Allowed Transverse Strip Seal Expansion Joint System

| Manufacturer | Strip Seal System (Designated Name) | Movement Parallel to RDWY | Allowed Installation Gap ① Normal to Joint at RDWY Surface @ Air/Surface Temperature ② | | | | | | ③ |
|---|---|---|---|---|---|---|---|---|---|
| | | | @ 40°F | @ 50°F | @ 60°F | @ 70°F | @ 80°F | @ 90°F | |
| D S Brown | Strip seal L2-400 | 1 3/16" | 2 3/16" | 2 1/16" | 2" | 1 15/16" | 1 13/16" | 1 3/8" | □ |
| Watson Bowman Acme (Wabo) | Strip seal SE-300 | 1 3/16" | 2 3/16" | 2 1/16" | 2" | 1 15/16" | 1 13/16" | 1 3/8" | □ |
| Watson Bowman Acme (Wabo) | Strip seal SE-400 | 1 3/16" | 2 3/16" | 2 1/16" | 2" | 1 15/16" | 1 13/16" | 1 3/8" | □ |

# DETAILS OF STRIP SEAL EXPANSION JOINT SYSTEM AT END ABUTMENT NO. 1

Detailed Sep. 2019
Checked Jan. 2020

Note: This drawing is not to scale. Follow dimensions.



STATE OF MISSOURI
TRAVIS S. STUMP
NUMBER PE-2010000870
PROFESSIONAL ENGINEER
THIS SHEET HAS BEEN SIGNED, SEALED AND DATED ELECTRONICALLY.

| DATE PREPARED | |
|---|---|
| 2/18/2020 | |
| ROUTE 71 | STATE MO |
| DISTRICT BR | SHEET NO. 2 |
| COUNTY JACKSON | |
| JOB NO. J4P3266 | |
| CONTRACT ID. | |
| PROJECT NO. | |
| BRIDGE NO. A51831 | |

| DATE | DESCRIPTION |
|---|---|

IF A SEAL IS PRESENT ON THIS SHEET IT HAS BEEN ELECTRONICALLY SEALED AND DATED.

MISSOURI HIGHWAYS AND TRANSPORTATION COMMISSION
105 WEST CAPITOL
JEFFERSON CITY, MO 65102
1-888-ASK-MODOT (1-888-275-6636)

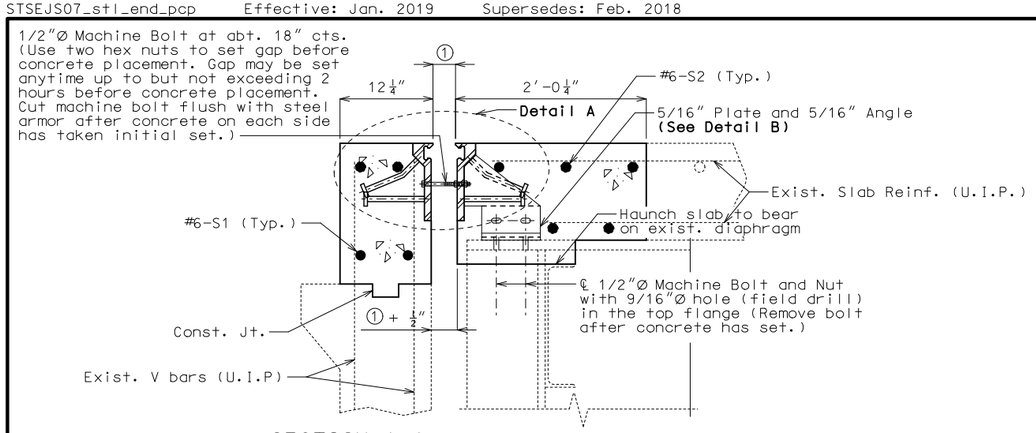


SECTION A-A

Note: Strip seal gland not shown for clarity.

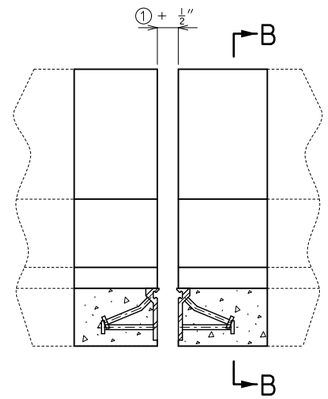


Note: Strip seal gland not shown for clarity.

PART ELEVATION OF BARRIER CURB

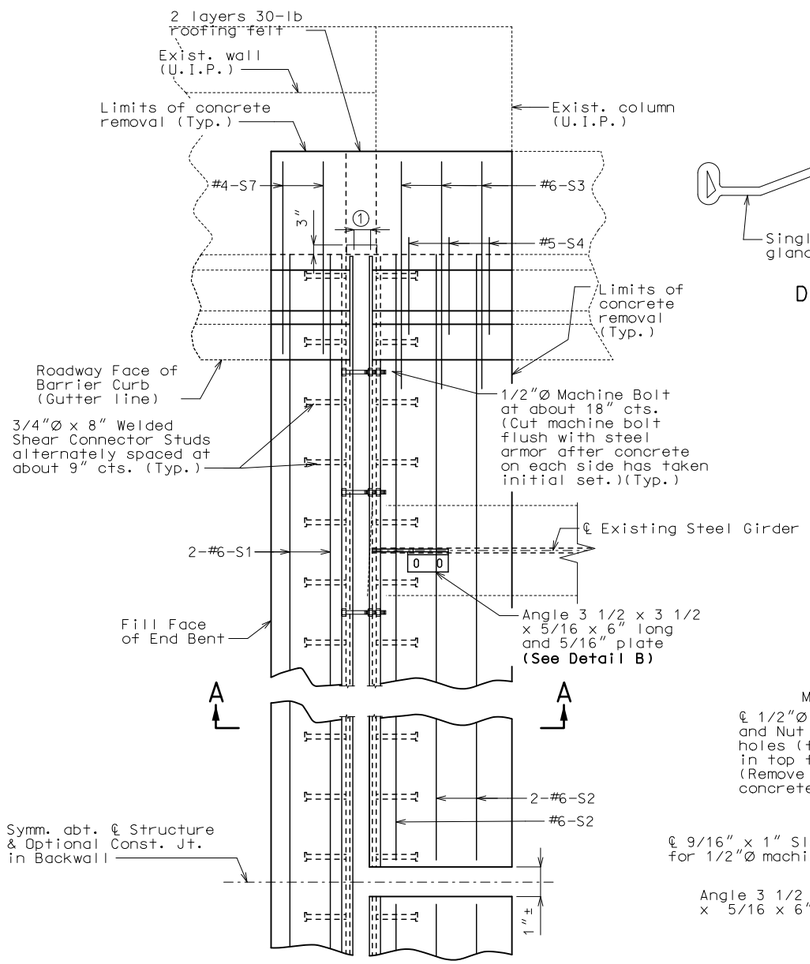


PART PLAN

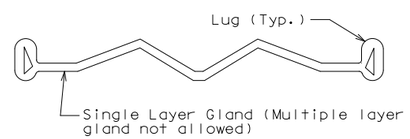


DETAIL OF GLAND

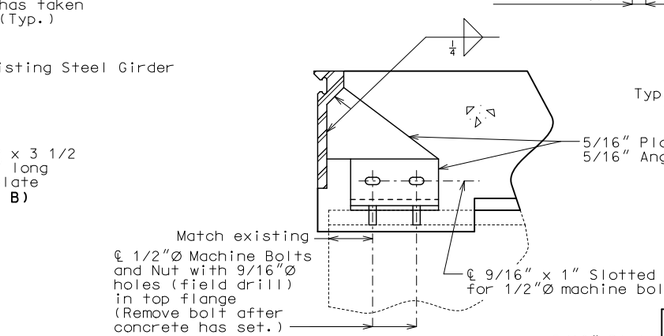


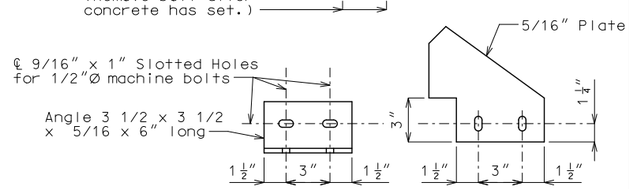


DETAIL B

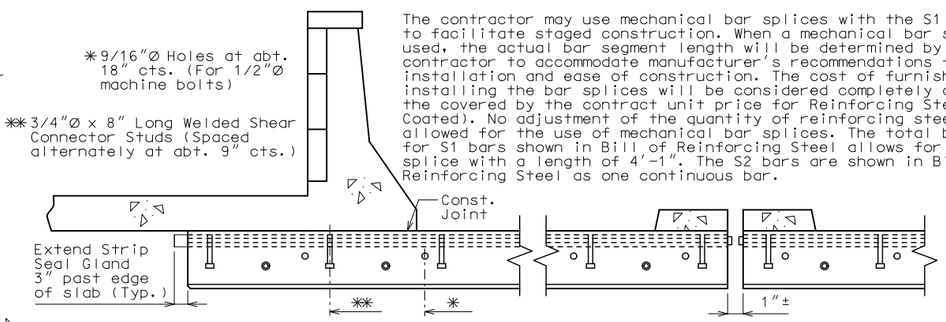


PART SECTION B-B

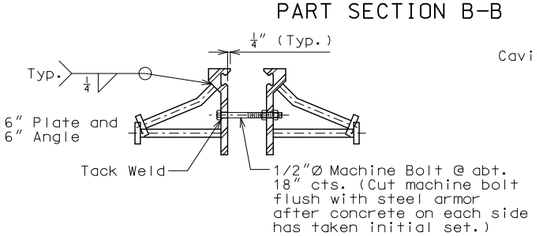


DETAIL A

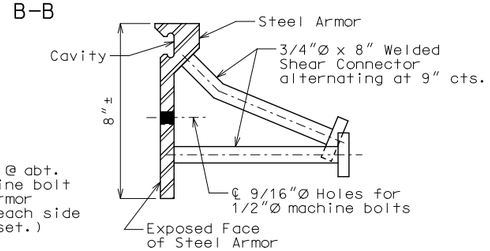


DETAIL OF JOINT ARMOR

## GENERAL NOTES:

Expansion joint system shall be fabricated in one section, except for staged construction and when the length is over 50 feet. A complete joint penetration groove welded splice shall be required. Welds shall be ground flush to provide a smooth surface. The expansion joint system shall be fabricated and installed to the crown and grade of the roadway.

The strip seal gland shall be installed in joints in one continuous piece without field splices. Factory splicing will be permitted for joints in excess of 53 feet.

Structural steel for the expansion joint system and sidewalk skid plate shall be ASTM A709 Grade 36 except the steel armor may be ASTM A709 Grade 50W. Anchors for the expansion joint system shall be in accordance with Sec 1037.

Strip seal expansion joint system shall be in accordance with Sec 717.

Structural steel for the expansion joint system and sidewalk skid plate shall be coated with a minimum of two coats of inorganic zinc primer (5 mils minimum) or galvanized in accordance with ASTM A123. Anchors need not be protected from overspray.

Longitudinal reinforcing steel shall be placed, bent or cut so that ends shall be 1" from the vertical leg of the steel armor at the expansion joint system.

Concrete shall be forced under and around steel armor and anchors. Proper consolidation of the concrete shall be achieved by localized internal vibration.

② The installation temperature shall be taken as the actual air temperature averaged over the 24-hour period immediately preceding installation.

③ MoDOT Construction personnel will indicate the strip seal expansion joint system installed.

Steel armor may also be referred to as extrusion or rail.

The contractor may use mechanical bar splices with the S1 and S2 bars to facilitate staged construction. When a mechanical bar splices is used, the actual bar segment length will be determined by the contractor to accommodate manufacturer's recommendations for installation and ease of construction. The cost of furnishing and installing the bar splices will be considered completely covered by the covered by the contract unit price for Reinforcing Steel (Epoxy Coated). No adjustment of the quantity of reinforcing steel will be allowed for the use of mechanical bar splices. The total bar length for S1 bars shown in Bill of Reinforcing Steel allows for one lap splice with a length of 4'-1". The S2 bars are shown in Bill of Reinforcing Steel as one continuous bar.

### Table of Allowed Transverse Strip Seal Expansion Joint System

| Manufacturer | Strip Seal System (Designated Name) | Movement Parallel to RDWY | Allowed Installation Gap ① Normal to Joint at RDWY Surface @ Air/Surface Temperature ② | | | | | | ③ |
|---|---|---|---|---|---|---|---|---|---|
| | | | @ 40°F | @ 50°F | @ 60°F | @ 70°F | @ 80°F | @ 90°F | |
| D S Brown | Strip seal L2-400 | 1 3/16" | 2 3/16" | 2 1/16" | 2" | 1 15/16" | 1 13/16" | 1 3/8" | □ |
| Watson Bowman Acme (Wabo) | Strip seal SE-300 | 1 3/16" | 2 3/16" | 2 1/16" | 2" | 1 15/16" | 1 13/16" | 1 3/8" | □ |
| Watson Bowman Acme (Wabo) | Strip seal SE-400 | 1 3/16" | 2 3/16" | 2 1/16" | 2" | 1 15/16" | 1 13/16" | 1 3/8" | □ |

# DETAILS OF STRIP SEAL EXPANSION JOINT SYSTEM AT END BENT NO. 3

Note: This drawing is not to scale. Follow dimensions.

Sheet No. 3 of 4

Detailed Sep. 2019
Checked Jan. 2020

STATE OF MISSOURI
TRAVIS S. STUMP
NUMBER PE-2010000870
PROFESSIONAL ENGINEER
THIS SHEET HAS BEEN SIGNED, SEALED AND DATED ELECTRONICALLY.

| DATE PREPARED | |
|---|---|
| 2/18/2020 | |
| ROUTE 71 | STATE MO |
| DISTRICT BR | SHEET NO. 3 |
| COUNTY JACKSON | |
| JOB NO. J4P3266 | |
| CONTRACT ID. | |
| PROJECT NO. | |
| BRIDGE NO. A51831 | |

| DATE | DESCRIPTION |
|---|---|

IF A SEAL IS PRESENT ON THIS SHEET IT HAS BEEN ELECTRONICALLY SEALED AND DATED.

MISSOURI HIGHWAYS AND TRANSPORTATION COMMISSION
105 WEST CAPITOL
JEFFERSON CITY, MO 65102
1-888-ASK-MODOT (1-888-275-6636)

# BILL OF REINFORCING STEEL

| NO. REQ'D. | MARK NO. SIZE | MARK NO. MARK | LOCATION | EPOXY (E) | SHAPE NO. | STIRRUP (S) | SUBSTR. (X) | VARIES (V) | NO. EACH | B FT. IN. | C FT. IN. | D FT. IN. | E FT. IN. | F FT. IN. | H FT. IN. | K FT. IN. | NOMINAL LENGTH FT. IN. | ACTUAL LENGTH FT. IN. | WEIGHT LBS. |
|---|---|---|---|---|---|---|---|---|---|---|---|---|---|---|---|---|---|---|---|
| | | | SLAB | | | | | | | | | | | | | | | | |
| 16 | 6 | S1 | SLAB | E | 20 | | | | | 45 2.000 | | | | | | | 45 2 | 45 2 | 1085 |
| 20 | 6 | S2 | SLAB | E | 20 | | | | | 42 11.000 | | | | | | | 42 11 | 42 11 | 1289 |
| 12 | 6 | S3 | SIDEWALK | E | 9 | S | | | | 6 3.750 | 14.375 | 15.000 | | | 12.250 | 7.500 | 8 9 | 8 9 | 158 |
| 12 | 5 | S4 | SIDEWALK | E | 28 | S | | | | | 18.000 | 9.000 | 18.000 | | | | 3 9 | 3 7 | 45 |
| 2 | 4 | S5 | RAISED CURB | E | 10 | | | | | | 10.000 | 3 8.000 | | | | | 5 4 | 5 2 | 7 |
| 6 | 4 | S6 | RAISED CURB | E | 10 | | | | | | 10.000 | 19.500 | | | | | 3 4 | 3 1 | 12 |
| 8 | 4 | S7 | SIDEWALK | E | 20 | | | | | 6 3.000 | | | | | | | 6 3 | 6 3 | 33 |
| | | | BARRIER CURB | | | | | | | | | | | | | | | | |
| 20 | 5 | R1 | BARRIER CURB | E | 19 | S | | | | 2 6.000 | 3.500 | | | | | | 2 10 | 2 8 | 56 |
| 20 | 5 | R2 | BARRIER CURB | E | 15 | S | | | | 2 6.125 | 3.500 | | | | 2 6.000 | 3.000 | 2 10 | 2 9 | 57 |
| 20 | 5 | R3 | BARRIER CURB | E | 19 | S | | | | 17.000 | 6.000 | | | | | | 0 23 | 0 22 | 38 |
| 20 | 5 | R4 | BARRIER CURB | E | 27 | S | | | | | 6.000 | 11.125 | 7.000 | 12.000 | 9.125 | 6.375 | 3 0 | 2 10 | 59 |
| 20 | 5 | R5 | BARRIER CURB | E | 15 | S | | | | 2 0.125 | 11.000 | | | | 2 0.000 | 2.375 | 2 11 | 2 10 | 59 |
| | | | TOTALS | | | | | | | | | | | | | | | | |
| | 4 | | | E | | | | | | | | | | | | | | | 52 |
| | 5 | | | E | | | | | | | | | | | | | | | 314 |
| | 6 | | | E | | | | | | | | | | | | | | | 2532 |
| | | | TOTAL | | | | | | | | | | | | | | | | 0 |
| | | | TOTAL | E | | | | | | | | | | | | | | | 2898 |
| | | | Slab on Girder | | | | | | | | | | | | | | | | |
| | 4 | | | E | | | | | | | | | | | | | | | 52 |
| | 5 | | | E | | | | | | | | | | | | | | | 45 |
| | 6 | | | E | | | | | | | | | | | | | | | 2532 |
| | | | TOTAL | | | | | | | | | | | | | | | | 2629 |
| | | | Safety Barrier Curb | | | | | | | | | | | | | | | | |
| | 5 | | | E | | | | | | | | | | | | | | | 269 |
| | | | TOTAL | | | | | | | | | | | | | | | | 269 |

# BILL OF REINFORCING STEEL

| NO. REQ'D. | MARK NO. SIZE | MARK NO. MARK | LOCATION | EPOXY (E) | SHAPE NO. | STIRRUP (S) | SUBSTR. (X) | VARIES (V) | NO. EACH | B FT. IN. | C FT. IN. | D FT. IN. | E FT. IN. | F FT. IN. | H FT. IN. | K FT. IN. | NOMINAL LENGTH FT. IN. | ACTUAL LENGTH FT. IN. | WEIGHT LBS. |
|---|---|---|---|---|---|---|---|---|---|---|---|---|---|---|---|---|---|---|---|

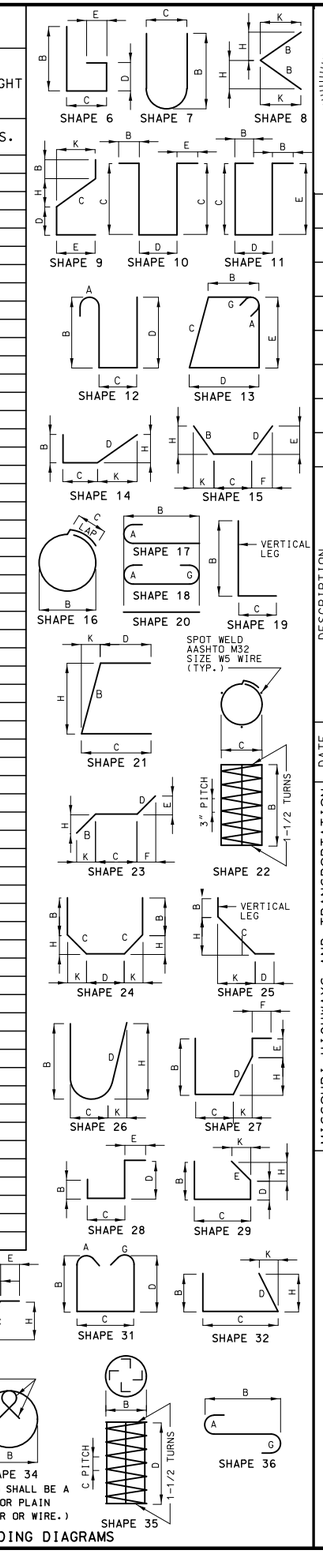


BENDING DIAGRAMS

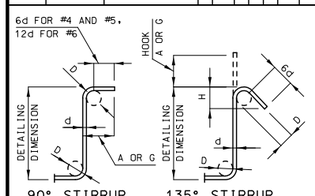


| STIRRUP HOOK DIMENSIONS | | | | |
|---|---|---|---|---|
| GRADES 40 - 50 - 60 KSI | | | | |
| BAR SIZE | D (IN.) | 90° HOOK | 135° HOOK | |
| | | HOOK A OR G | HOOK A OR G | APPROX. H |
| #4 | 2" | 4 1/2" | 4 1/2" | 3" |
| #5 | 2 1/2" | 6" | 5 1/2" | 3 3/4" |
| #6 | 4 1/2" | 12" | 8" | 4 1/2" |

NOTE: UNLESS OTHERWISE NOTED, DIAMETER "D" IS THE SAME FOR ALL BENDS AND HOOKS ON A BAR.

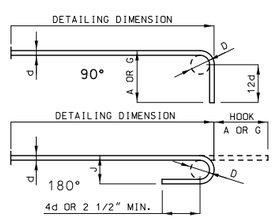


| END HOOK DIMENSIONS | | | | |
|---|---|---|---|---|
| BAR SIZE | D (IN.) | ALL GRADES | | |
| | | 180° HOOKS | | 90° HOOKS |
| | | A OR G | J | A OR G |
| #3 | 2 1/4" | 5" | 3" | 6" |
| #4 | 3" | 6" | 4" | 8" |
| #5 | 3 3/4" | 7" | 5" | 10" |
| #6 | 4 1/2" | 8" | 6" | 12" |
| #7 | 5 1/4" | 10" | 7" | 14" |
| #8 | 6" | 11" | 8" | 16" |
| #9 | 9 1/2" | 15" | 11 3/4" | 19" |
| #10 | 10 3/4" | 17" | 13 1/4" | 22" |
| #11 | 12" | 19" | 14 3/4" | 2'-0" |
| #14 | 18 1/4" | 2'-3" | 21 3/4" | 2'-7" |

**NOTE:**
ALL STANDARD HOOKS AND BENDS OTHER THAN 180 DEGREE ARE TO BE BENT WITH SAME PROCEDURE AS FOR 90 DEGREE STANDARD HOOKS.
HOOKS AND BENDS SHALL BE IN ACCORDANCE WITH THE PROCEDURES AS SHOWN ON THIS SHEET.
E = EPOXY COATED REINFORCEMENT.
S = STIRRUP.
X = BAR IS INCLUDED IN SUBSTRUCTURE QUANTITIES.
V = BAR DIMENSIONS VARY IN EQUAL INCREMENTS BETWEEN DIMENSIONS SHOWN ON THIS LINE AND THE FOLLOWING LINE.
NO. EA. = NUMBER OF BARS OF EACH LENGTH.
NOMINAL LENGTHS ARE BASED ON OUT TO OUT DIMENSIONS SHOWN IN BENDING DIAGRAMS AND ARE LISTED FOR FABRICATORS USE. (NEAREST INCH)
ACTUAL LENGTHS ARE MEASURED ALONG CENTERLINE BAR TO THE NEAREST INCH.
PAYWEIGHTS ARE BASED ON ACTUAL LENGTHS.
FOUR ANGLE OR CHANNEL SPACERS ARE REQUIRED FOR EACH COLUMN SPIRAL. SPACERS ARE TO BE PLACED ON INSIDE OF SPIRALS. LENGTH AND WEIGHT OF COLUMN SPIRALS DO NOT INCLUDE SPLICES OR SPACERS.
REINFORCING STEEL (GRADE 60) FY = 60,000 PSI.

STATE OF MISSOURI
TRAVIS S. STUMP
NUMBER PE-2010000870
PROFESSIONAL ENGINEER
THIS SHEET HAS BEEN SIGNED, SEALED AND DATED ELECTRONICALLY.

DATE PREPARED 2/18/2020
ROUTE 71 | STATE MO
DISTRICT BR | SHEET NO. 4
COUNTY JACKSON
JOB NO. J4P3266
CONTRACT ID.
PROJECT NO.
BRIDGE NO. A51831

DESCRIPTION
DATE

MISSOURI HIGHWAYS AND TRANSPORTATION COMMISSION
105 WEST CAPITOL
JEFFERSON CITY, MO 65102
1-888-ASK-MODOT (1-888-275-6636)

IF A SEAL IS PRESENT ON THIS SHEET IT HAS BEEN ELECTRONICALLY SEALED AND DATED.

Detailed Jan. 2020
Checked Jan. 2020

Note: This drawing is not to scale. Follow dimensions.

| SEC/SUR | 28 | TWP | 49N | RGE | 31W |
|---|---|---|---|---|---|

# U.I.P. & REHABILITATE (137.8′–118.1′) CONTINUOUS COMPOSITE PLATE GIRDER SPANS

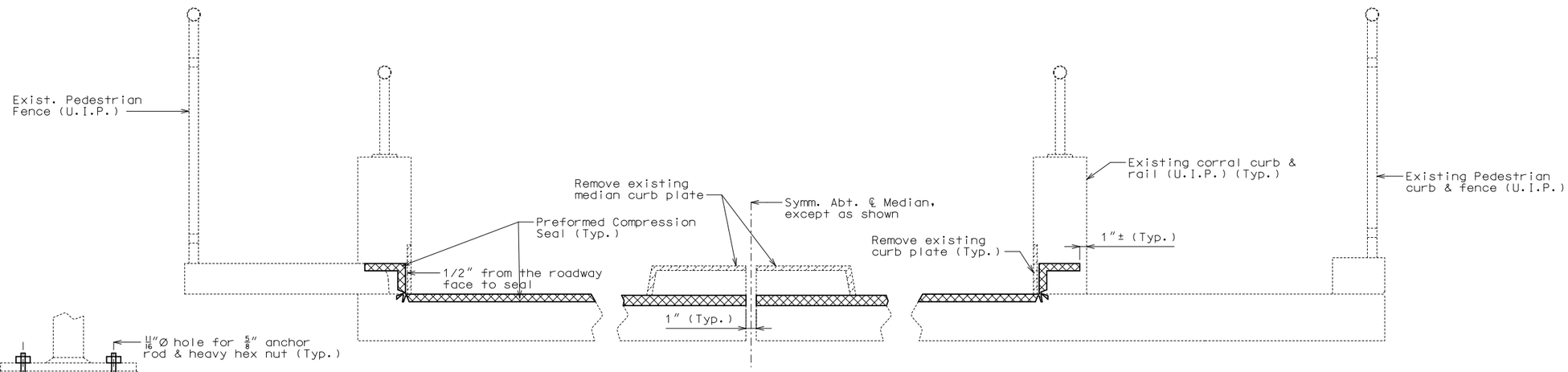


PART SECTION THRU EXPANSION JOINT AT ABUTMENTS NO. 1 & 3

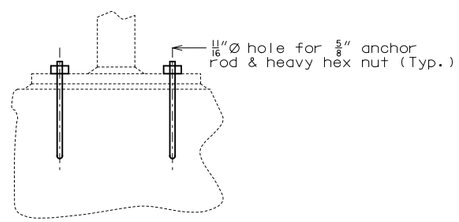


PART SECTION OF FENCE SHOWING ANCHOR BOLTS

## General Notes:

**Design Specifications:**
2002 AASHTO LFD (17th Ed.) Standard Specifications
Bridge Deck Rating = 7

**Miscellaneous:**
Outline of old work is indicated by light dashed lines. Heavy lines indicate new work.

Contractor shall verify all dimensions in field before ordering new material.

The area exposed by the removal of concrete and not covered with new concrete shall be coated with an approved qualified special mortar in accordance with Sec 704.

Remove existing preformed compression seals between roadway curbs, including at raised median curb.

Cost of curb plate removal and disposal will be considered completely covered by the contract unit price for Removal of Existing Expansion Joint Seal or Sealant.

**Anchor Bolts:**
Remove and replace broken anchor bolts on pedestrian fence as directed by the Engineer.

All cone expansion anchors and heavy hex nuts shall be galvanized.

Cost of fabricating, galvanized and installing cone expansion anchors and heavy hex nuts will be considered completely covered by the contract unit price for other items.

The 5/8″ diameter cone expansion anchors shall have a minimum ultimate pullout strength of 10,800 lbs. in concrete with f′c = 4,000 psi

**Traffic Handling:**
Traffic to be maintained on structure during construction. See roadway plans for traffic control.

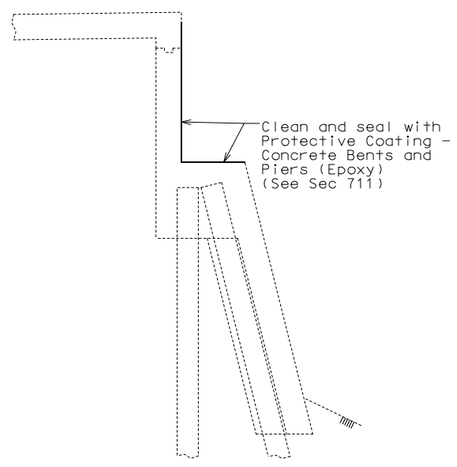


PART SECTION THRU ABUTMENTS NO. 1 & 3 SHOWING DETAILS OF PROTECTIVE COATING

### Table of Transverse Preformed Compression Seal Dimensions

| Seal width Perpendicular to Joint | Movement Capacity (M ⊥ to Joint) | Min Joint Width (⊥ to Joint) | Max Joint Width (⊥ to Joint) | Allowed Installation Gap Normal to Joint at RDWY Surface @ Air/Surface Temperature ② ① | | | |
|---|---|---|---|---|---|---|---|
| | | | | @ 40°F | @ 50°F | @ 60°F | @ 70°F |
| 4″ | 1.65″ | 1.75″ | 3.40″ | 2 13/16″ ± | 2 3/4″ ± | 2 5/8″ ± | 2 1/2″ ± |

Note: Depth of seal shall not be less than width of seal.

② The installation temperature shall be taken as the actual air temperature averaged over the 24-hour period immediately preceding installation.

### Estimated Quantities

| Item | | Total |
|---|---|---|
| Removal of Existing Expansion Joint Seal or Sealant | linear foot | 185 |
| Protective Coating - Concrete Bents and Piers (Epoxy) | lump sum | 1 |
| Preformed Compression Seal | linear foot | 185 |
| | | |
| | | |
| | | |
| | | |
| | | |

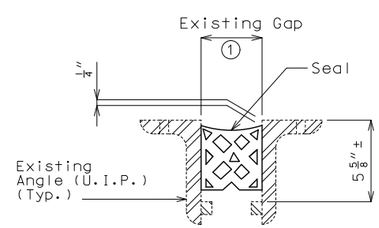


PART CROSS SECTION THRU EXPANSION JOINT

## REPAIRS TO BRIDGE: ROUTE LITTLE BLUE EXPRESSWAY OVER I-70

ROUTE LITTLE BLUE EXPRESSWAY FROM ROUTE 40 TO EAST 39TH STREET
ABOUT 1.0 MILES NORTH OF ROUTE 40
BEG. STA. 31+11.30± (MATCH EXISTING) (LITTLE BLUE EXPRESSWAY)

# DETAILS OF PREFORMED COMPRESSION SEAL REPLACEMENT AT ABUTENTS NO. 1 & 3

Detailed Aug. 2019
Checked Jan. 2020

Note: This drawing is not to scale. Follow dimensions.

Sheet No. 1 of 1

STATE OF MISSOURI
TRAVIS S. STUMP
NUMBER PE-2010000870
PROFESSIONAL ENGINEER
THIS SHEET HAS BEEN SIGNED, SEALED AND DATED ELECTRONICALLY.

| DATE PREPARED | |
|---|---|
| 2/18/2020 | |
| ROUTE: I-70 | STATE: MO |
| DISTRICT: BR | SHEET NO.: 1 |
| COUNTY: CLAY | |
| JOB NO.: J4P3266 | |
| CONTRACT ID. | |
| PROJECT NO. | |
| BRIDGE NO.: A57261 | |

| DATE | DESCRIPTION |
|---|---|
| | |

IF A SEAL IS PRESENT ON THIS SHEET IT HAS BEEN ELECTRONICALLY SEALED AND DATED.

MISSOURI HIGHWAYS AND TRANSPORTATION COMMISSION
105 WEST CAPITOL
JEFFERSON CITY, MO 65102
1-888-ASK-MODOT (1-888-275-6636)