FOR INFORMATION ONLY **A16433, Sht. 1**

MISSOURI STATE HIGHWAY DEPARTMENT

FED. ROAD DIST. NO.	STATE	FED. PROJ. NO.	FISCAL YEAR	SHEET NO.	TOTAL SHEETS
5	MO.		19	146	

Note: For location of Pail Post Expansion see sheet No. 10 of 11.

45', 75', 75', 45' Continuous Box Girder Spans

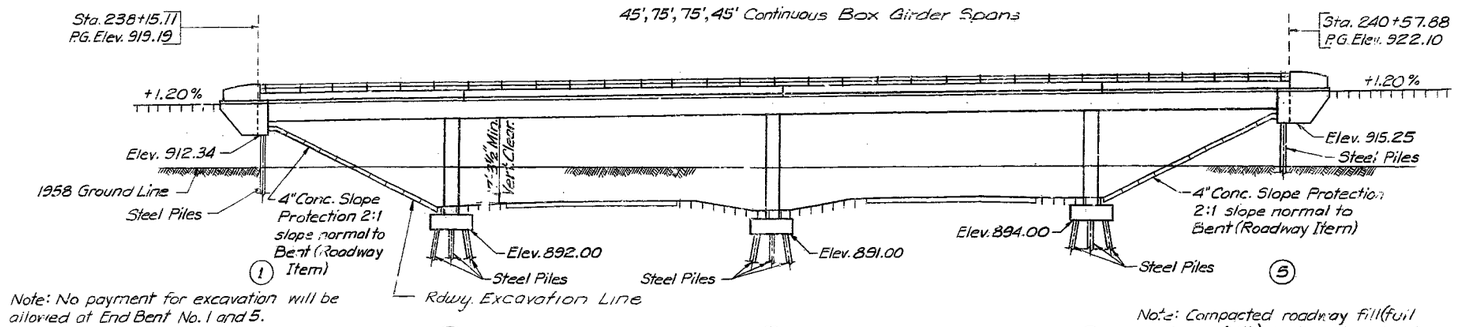

Note: No payment for excavation will be allowed at End Bent No. 1 and 5.

Note: Compacted roadway fill (full roadway width) shall be placed up to elevation of bottom of concrete beam in front of and not less than 25'-0" in back of End Bents before steel piles are driven.

ELEVATION

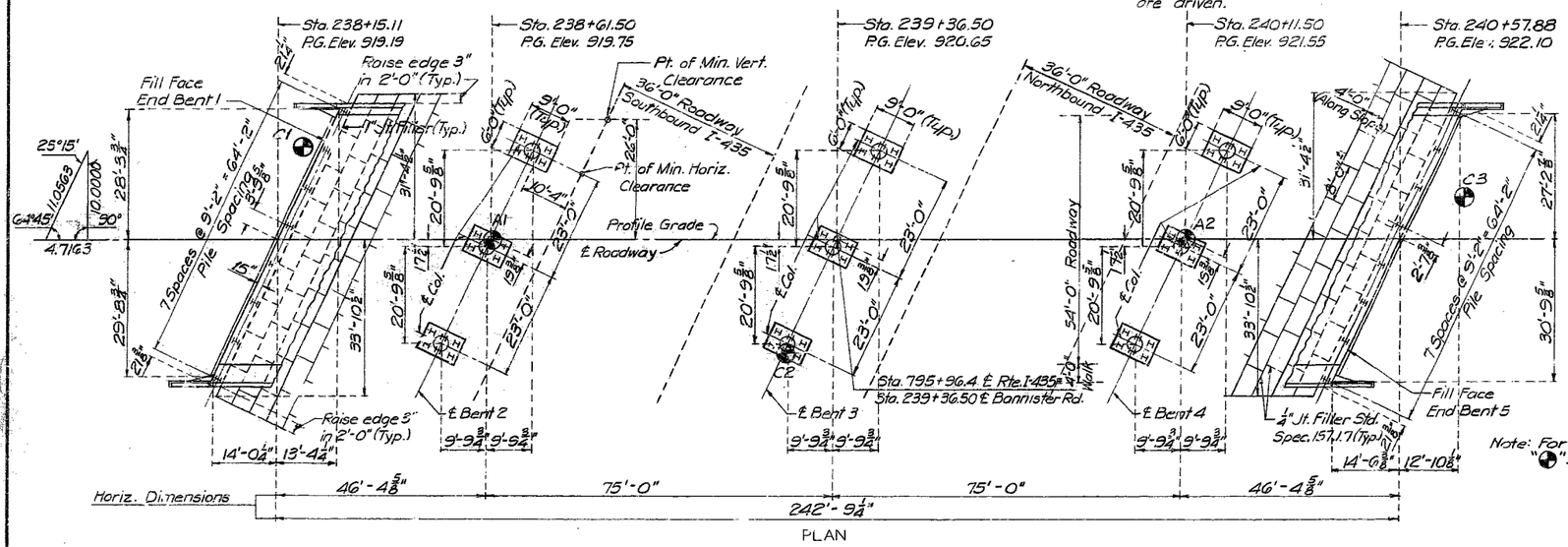

PLAN

PILE DATA						
BENT NO.		1	2	3	4	5
Pile Type and Size		10BP42	10BP42	10BP42	10BP42	10BP42
Number		8	18	18	18	8
Approximate Length	Ft.	32	12	22	17	37
Design Bearing	Tons	38	54	56	54	38
Hammer Energy Required	Ft. Lbs.	8600	12,700	13,200	12,700	8,600

Minimum energy requirement of hammer based on plan length and design bearing value of piles. Increase by the factor (W+w)/2W when the weight of the ram (W) is less than the weight of the pile (w).
All piles shall be driven to practical refusal.

GENERAL NOTES:

Design Specifications A.A.S.H.O. - 1961
Loading HS20-44 (15 #/sq. ft. Future Wearing Surface)
Earth 120#, Equivalent Fluid Pressure 30#
Class B Concrete (substructure) f'_c = 1,200 psi
Class B1 Concrete (superstructure) f'_c = 1,600 psi
Reinforcing Steel f_s = 20,000 psi
Steel Pile (A.S.T.M. A36-63T) f_b = 9,000 psi
Superstructure deck to be surface sealed.
Structural Steel access doors shall be cleaned and painted in the field or may be cleaned and painted one coat of red lead in the shop with the two remaining coats applied in the field except that final coat on access doors and frames shall be gray. In lieu of painting, the contractor may, if he prefers, galvanize this material. All galvanizing shall be done after fabrication. Cost of painting or galvanizing to be included in price bid for other items.

Note: For Boring Data see sheet 2 of 11.
"⊕" Indicates location of Boring.

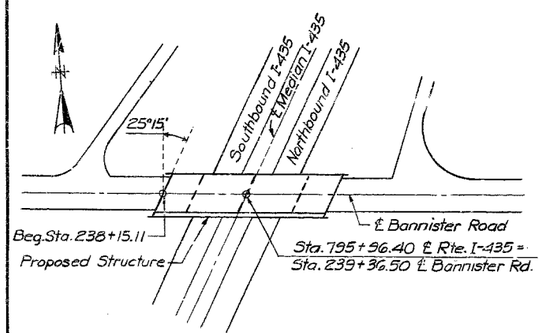

LOCATION SKETCH

ESTIMATED QUANTITIES				
Item		Substr.	Superstr.	Total
Class 1 Excavation For Structures	Cu. Yds.	160		160
Steel Pile in Place (10")	Lin. Ft.	1,470		1,470
Class B Concrete	Cu. Yds.	58.5		58.5
Class B1 Concrete	Cu. Yds.		370.1	370.1
Reinforcing Steel	Lbs.	2,530	332,420	334,950
H.S. Bridge Rail (Two Tube Type)	Lin. Ft.		485	485
Conduit System (on structure)	Lump Sum		1	1

All Concrete and reinforcement in end posts, parapets and curbs is included with superstructure quantities.
All concrete and reinforcement above footings in intermediate bents is included in superstructure quantities.

BENCHMARKS
U.S.G.S. Datum
BM #85 Spike in 24" Elm 235' Lt. Sta. 785+70 Elev. 922.43
BM #86 Spike in P.P. 240' Lt. Sta. 795+75 Elev. 902.43

STATE OF MISSOURI JACK M. LASLEY NUMBER E-8243 REGISTERED PROFESSIONAL ENGINEER

SUBMITTED BY:
Jack M. Lasley
REGISTERED PROFESSIONAL ENGINEER
MISSOURI NO. E-8243

THATCHER & PATIENT, INC.
DESIGNED June 1966 BY Wang
DETAILED June 1966 BY Barry
CHECKED June 1966 BY Brandhorst

Note: This drawing is not to scale. Follow dimensions.

Sheet No. 1 of 11.

BRIDGE BANNISTER ROAD UNDERPASS
STATE ROAD INTERSTATE ROUTE 435
IN KANSAS CITY
PROJECT NO. I-IG-435-1(58)(RTE.I-435) **STA.** 795+96.4
JACKSON **COUNTY**

SUBMITTED BY D.S. Jackson BRIDGE ENGINEER DATE 12/15/66
APPROVED BY W.P. Mueller CHIEF ENGINEER DATE 12/15/66

STD. 54.00
A-1643

FOR INFORMATION ONLY **A16433, Sht. 2**

MISSOURI STATE HIGHWAY DEPARTMENT

FED. ROAD DIST. NO.	STATE	FED. AID PROJ. NO.	FISCAL YEAR	SHEET NO.	TOTAL SHEETS
5	MO.		19	147	

COMPLETE BILL OF REINFORCING STEEL

NO.	SIZE	LENGTH	MARK	LOCATION
END BENT NO.1				
8	#8	36'-3"	AB1	Beam
4	#8	31'-6"	AB2	"
4	#8	40'-9"	AB3	"
16	#6	34'-9"	AB4	"
134	#5	10'-3"	U1	"
4	#4	5'-0"	V1	Wings
10	#4	6'-9"	V2	"
4	#4	9'-6"	V3	"
10	#4	7'-0"	V4	"
8	#6	10'-3"	H1	"
5	#6	17'-0"	H2	"
5	#6	17'-3"	H3	"
12	#6	7'-6"	H4	"
2	#6	14'-3"	T1	"
2	#6	14'-6"	T2	"
INTERMEDIATE BENT NO.2				
27	#7	8'-3"	F1	Footings
6	#7	15'-6"	F2	"
18	#5	5'-9"	F3	"
24	#5	2'-6"	D1	"
66 (33)	#3	9'-6"	RC1	Columns
* 16	#10	23'-3"	RC2	"
* 8	#10	22'-9"	RC3	"
8	#11	21'-6"	PB1	Beam
4	#11	25'-9"	PB2	"
12	#11	16'-6"	PB3	"
6	#10	16'-0"	PB4	"
1	#10	60'-0"	PB8	"
4	#6	31'-0"	PB11	"
154	#6	12'-3"	U2	"
INTERMEDIATE BENT NO.3				
27	#7	8'-9"	F1	Footings
6	#7	15'-6"	F2	"
18	#5	5'-9"	F3	"
24	#5	2'-6"	D1	"
69	#3	9'-6"	RC1	Columns
16	#10	25'-3"	RC4	"
8	#10	24'-9"	RC5	"
4	#11	23'-9"	PB1	Beam
8	#10	21'-9"	PB5	"
12	#145	15'-3"	PB6	"
6	#11	16'-0"	PB7	"
5	#11	60'-0"	PB9	"
4	#145	60'-0"	PB10	"
4	#6	31'-0"	PB11	"
154	#6	12'-3"	U2	"
INTERMEDIATE BENT NO.4				
27	#7	8'-9"	F1	Footings
6	#7	15'-6"	F2	"
18	#5	5'-9"	F3	"
24	#5	2'-6"	D1	"
66 (33)	#3	9'-6"	RC1	Columns
* 8	#10	23'-3"	RC2	"
* 16	#10	22'-9"	RC3	"
8	#11	21'-6"	PB1	Beam
4	#11	25'-3"	PB2	"
12	#11	16'-6"	PB3	"

* spliced - 1:0' Plus 2.5' splice = 3.5'

NO.	SIZE	LENGTH	MARK	LOCATION
INTERMEDIATE BENT NO.4 (Cont.)				
6	#10	16'-0"	PB4	Beam
11	#10	60'-0"	PB8	"
4	#6	31'-0"	PB11	"
154	#6	12'-3"	U2	"
END BENT NO.5				
8	#8	36'-3"	AB1	Beam
4	#8	31'-6"	AB2	"
4	#8	40'-9"	AB3	"
16	#6	34'-9"	AB4	"
134	#5	10'-3"	U1	"
4	#4	5'-0"	V1	Wings
10	#4	6'-9"	V2	"
4	#4	9'-6"	V3	"
10	#4	7'-0"	V4	"
8	#6	10'-3"	H1	"
5	#6	17'-0"	H2	"
5	#6	17'-3"	H3	"
12	#6	7'-6"	H4	"
2	#6	14'-3"	T1	"
2	#6	14'-6"	T2	"
SUPERSTRUCTURE				
G8	#7	24'-9"	S1	Bottom Slab
6	#8	24'-9"	S2	" "
G8	#7	35'-6"	S3	" "
6	#8	35'-6"	S4	" "
G4	#6	35'-3"	S5	" "
6	#9	39'-3"	S6	" "
6	#7	35'-3"	S7	" "
110	#6	16'-6"	S8	" "
G8	#9	36'-9"	S9	" "
6	#11	36'-9"	S10	" "
62	#9	50'-3"	S11	" "
6	#10	50'-3"	S12	" "
6	#11	50'-3"	S13	" "
70	#9	59'-6"	S14	" "
6	#11	59'-6"	S15	" "
55	#6	21'-0"	S16	" "
272	#5	28'-9"	S17	" "
272	#5	33'-0"	S18	" "
32	#6	5'-9"	S19	" "
150	#5	30'-6"	S20	Top Slab
150	#5	30'-9"	S21	"
225	#5	33'-3"	S22	" "
304	#6	31'-9"	S23	" "
304	#6	34'-0"	S24	" "
118	#4	21'-9"	S25	" "
6	#10	45'-0"	S26	" "
74	#9	45'-0"	S27	" "
78	#10	25'-0"	S28	" "
G8	#10	15'-6"	S29	" "
10	#9	15'-6"	S30	" "
118	#4	32'-0"	S31	" "
3	#11	51'-0"	S32	" "
87	#10	51'-0"	S33	" "
39	#11	32'-6"	S34	" "
39	#11	17'-6"	S35	" "
280	#5	6'-0"	G1	Girders
520	#5	5'-9"	G2	"
9732	#5	5'-9"	G5	"
32	#8	32'-3"	G4	"
32	#4	31'-3"	G5	"
32	#8	39'-0"	G6	"
32	#4	38'-0"	G7	"

NO.	SIZE	LENGTH	MARK	LOCATION
SUPERSTRUCTURE (Cont.)				
32	#8	55'-3"	G8	Girders
48	#4	32'-9"	G9	"
220	#4	4'-6"	W1	Diaphragms
8	#6	23'-9"	W2	"
8	#6	28'-6"	W3	"
16	#6	17'-9"	W4	"
241	#5	6'-3"	C1	Curbs
10	#4	25'-0"	C2	"
20	#4	38'-0"	C3	"
16	#4	23'-9"	C4	"
224	#5	4'-9"	C5	"
6	#6	24'-6"	C6	"
12	#5	38'-0"	C7	"
6	#6	24'-6"	C8	"
4	#5	6'-3"	C9	"
2	#5	5'-0"	C10	"
32	#5	8'-3"	R1	End Posts
4	#5	6'-3"	R2	" "
4	#5	6'-9"	R3	" "
4	#5	7'-3"	R4	" "
4	#5	7'-9"	R5	" "
4	#5	8'-0"	R6	" "
4	#5	8'-3"	R7	" "
4	#5	8'-3"	R8	" "
12	#5	8'-6"	R9	" "
243	#5	5'-3"	R10	Floropets
4	#5	35'-6"	R11	"
32	#5	9'-9"	R12	"
8	#5	28'-0"	R13	"
8	#5	28'-3"	R14	"
8	#5	9'-3"	R15	"
4	#5	37'-3"	R16	"
4	#5	38'-0"	R17	"
16	#5	27'-9"	R18	"
8	#5	10'-6"	R19	"
4	#5	34'-3"	R20	"
123	#5	5'-0"	R21	"

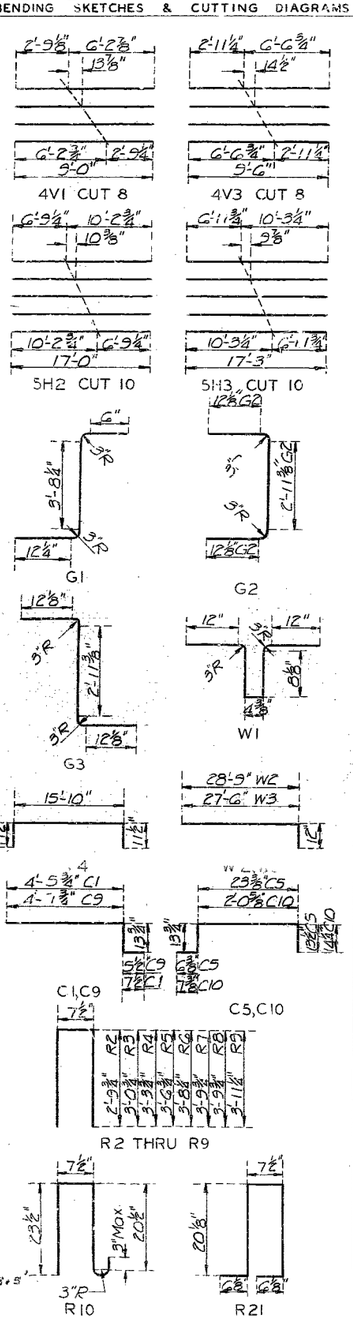

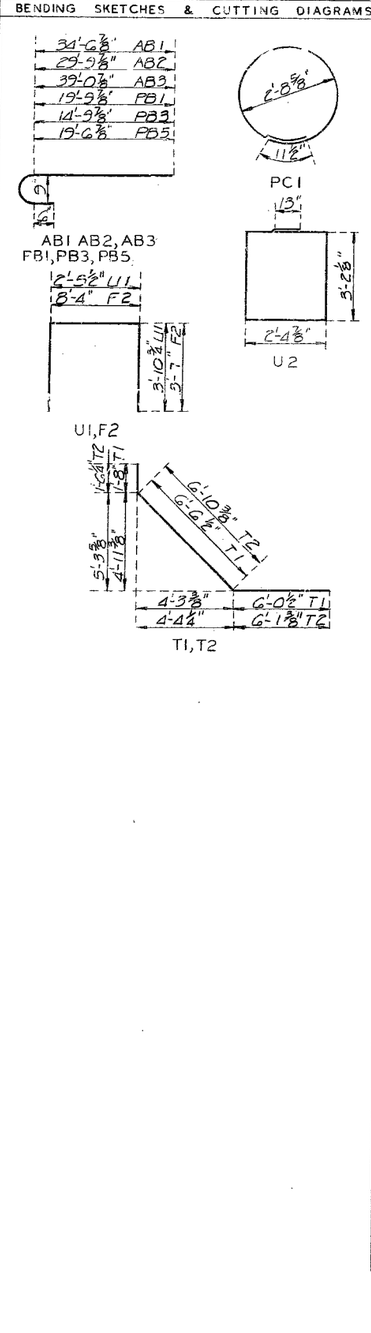

Sta. 238+07 22'Lt. | Sta. 238+62 ℄ | Sta. 239+37 27'Rt. | Sta. 240+12 ℄ | Sta. 240+67 10'Lt.

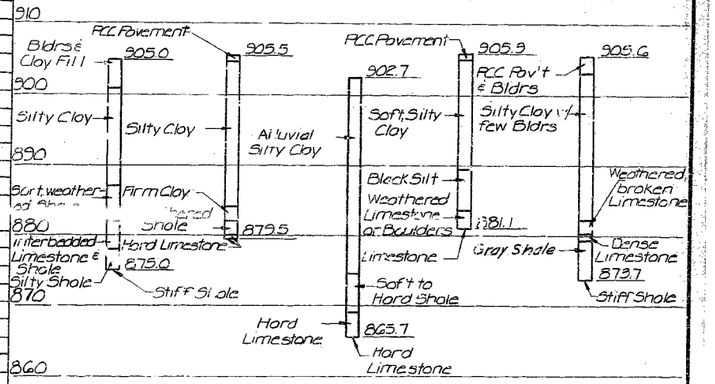

C1 (Core) | A1 (Auger) | C2 (Core) | A2 (Auger) | C3 (Core)

BORING DATA

BRIDGE BANNISTER ROAD UNDERPASS

STATE ROAD INTERSTATE ROUTE 435
IN KANSAS CITY

PROJECT NO. I-IG-435-1(58) **STA.** 795+96.4
(RTE. I-435)

JACKSON **COUNTY**

A-1643

445

THATCHER & PATIENT, INC.
Drawn June 1966 by Perkins
Checked June 1966 by Wang

Note: This drawing is not to scale. Follow dimensions.

Sheet No. 2 of 11.

MISSOURI STATE HIGHWAY DEPARTMENT

FED. ROAD DIST. NO.	STATE	FED. AID PROJ. NO.	FISCAL YEAR	SHEET NO.	TOTAL SHEETS
5	MO.		19	148	

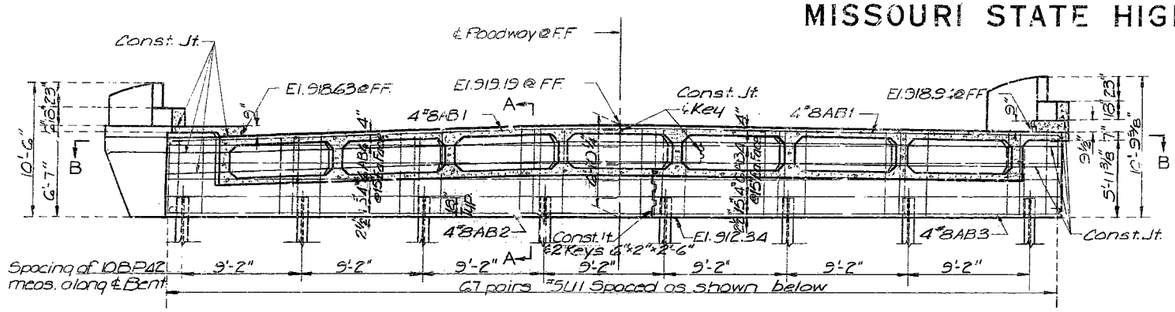

ELEVATION

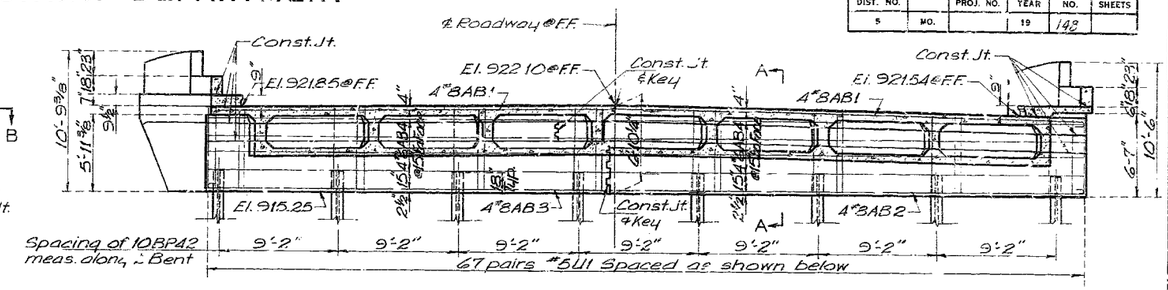

Note: For detail of Beam Construction Joint & Key between top and bottom slabs see Sheet 4 of 11.

ELEVATION

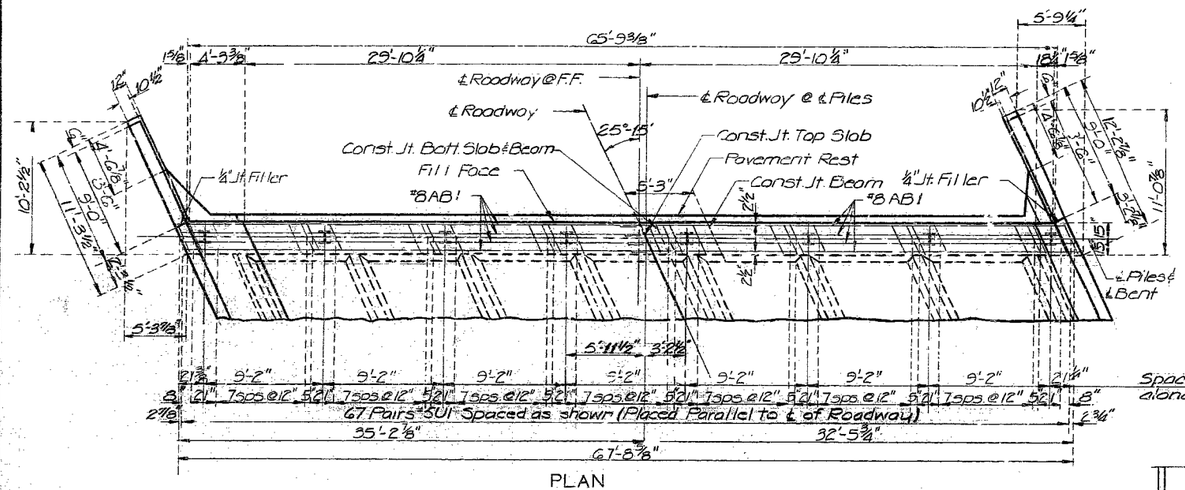

PLAN

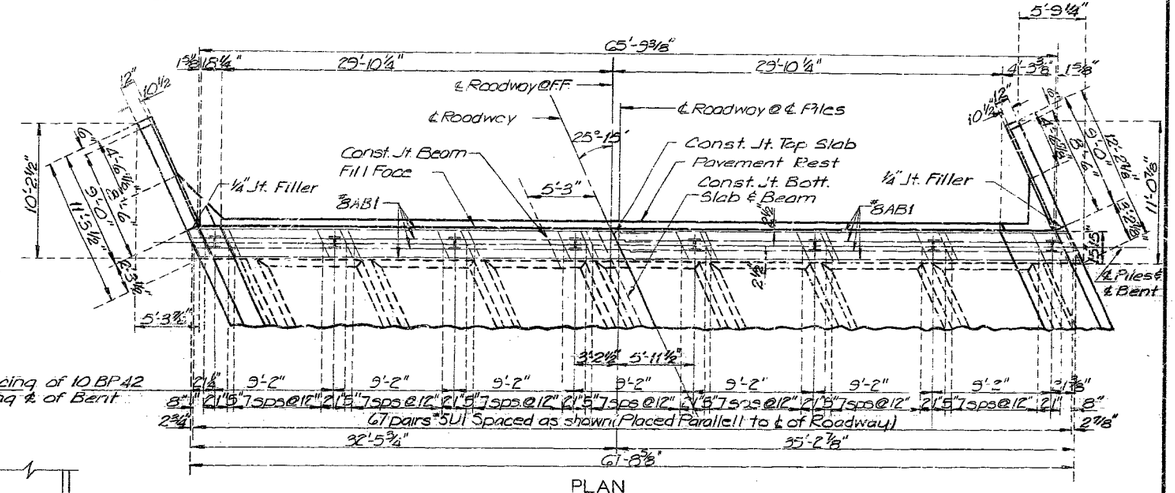

PLAN

DETAILS OF END BENT NO. 1

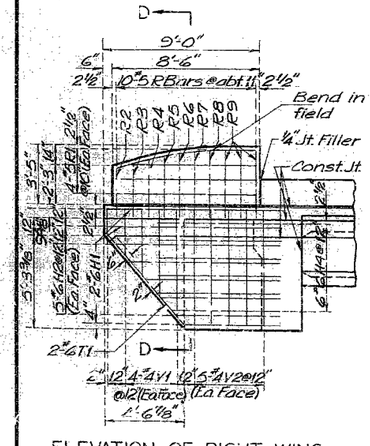

ELEVATION OF RIGHT WING

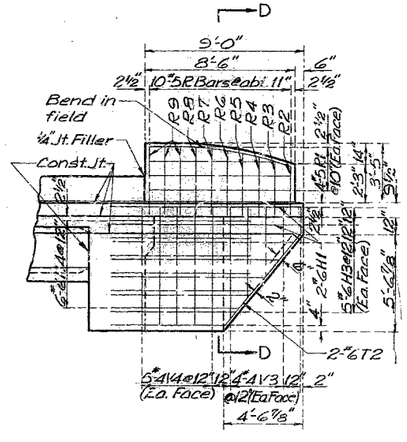

ELEVATION OF LEFT WING

Note: Bent No. 1 shown Bent No. 5 similar

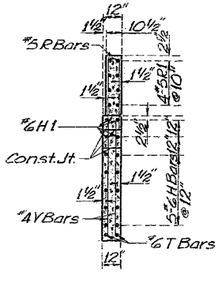

END POST ORDINATES

SECTION D-D

Note: For details of Conduit System see sheet 10 of 11.

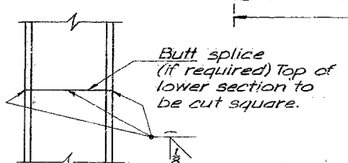

DETAIL OF STEEL PILE SPLICE

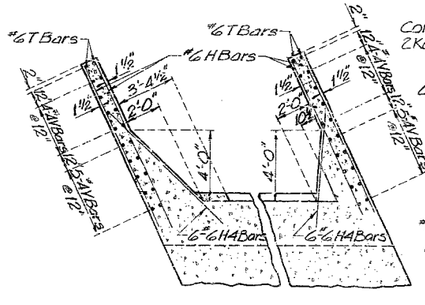

PART SECTION B-B

Note: Bent No. 1 shown Bent No. 5 similar.

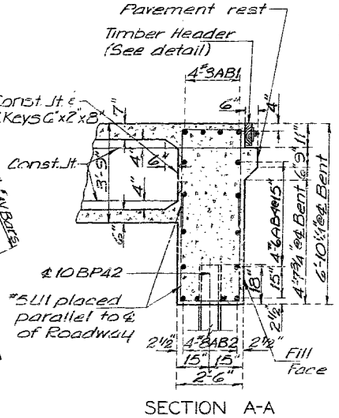

SECTION A-A

DETAILS OF END BENT NO. 5

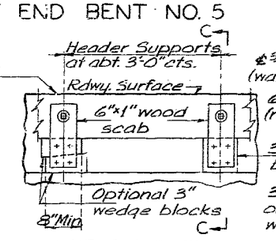

PART ELEVATION

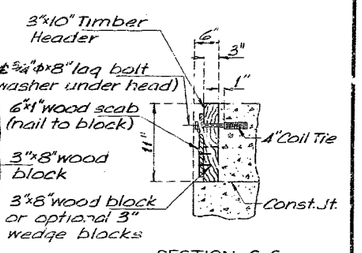

SECTION C-C

DETAILS OF TIMBER HEADER

Note: Cost of timber header complete in place to be included in price bid for concrete.

BRIDGE: BANNISTER ROAD UNDERPASS

STATE ROAD: INTERSTATE ROUTE 435

IN KANSAS CITY

PROJECT NO. I-IG-435-1(58)(RTE. I-435) **STA.** 795+96.4

JACKSON **COUNTY**

A-1643

THATCHER & PATIENT, INC
DETAILED June 1966 BY Reitins
CHECKED June 1966 BY Wang

Note: This drawing is not to scale. Follow dimensions.

Sheet No. 3 of 11.

MISSOURI STATE HIGHWAY DEPARTMENT

FED. ROAD DIST. NO.	STATE	FED. AID PROJ. NO.	FISCAL YEAR	SHEET NO.	TOTAL SHEETS
5	MO.		19	149	

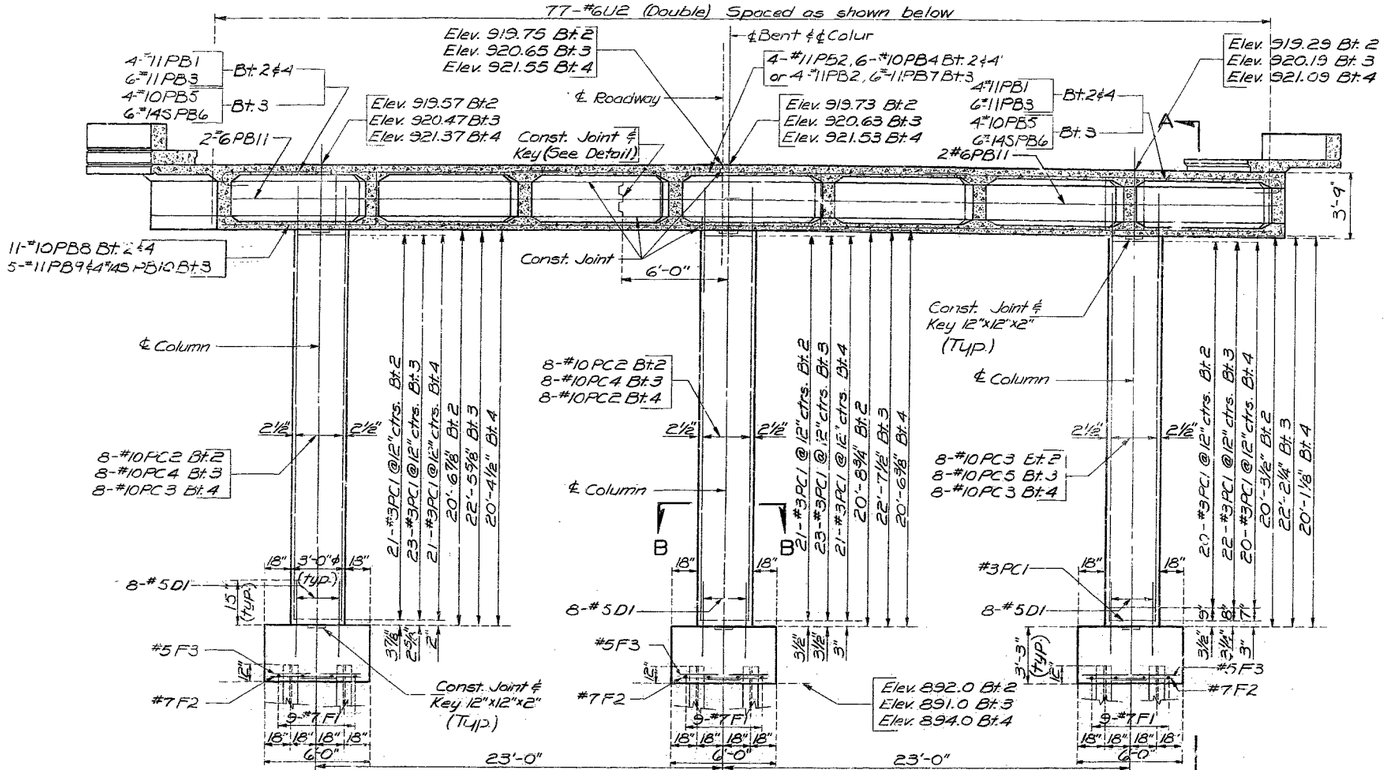

ELEVATION

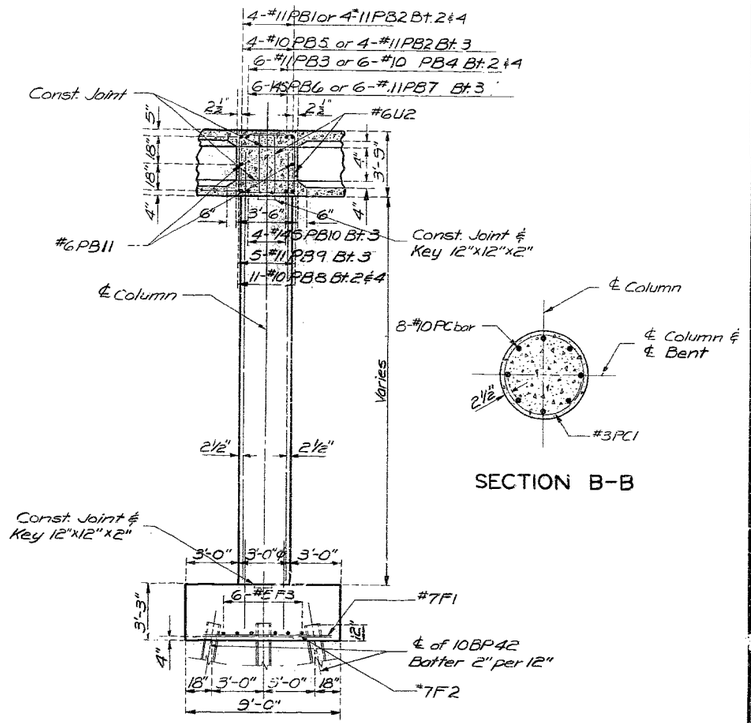

SECTION B-B

SECTION A-A

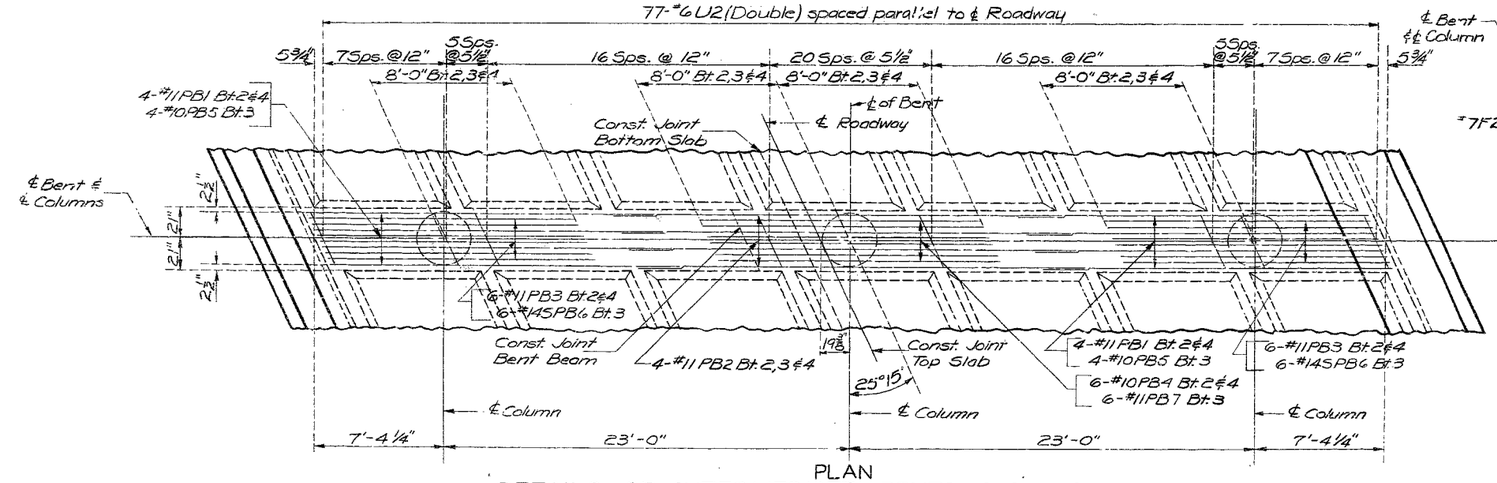

PLAN

DETAILS OF INTERMEDIATE BENTS 2, 3, AND 4

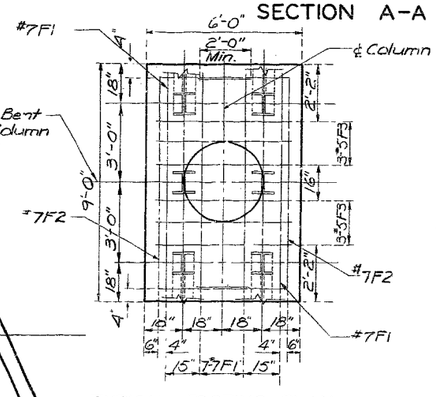

TYPICAL FOOTING PLAN

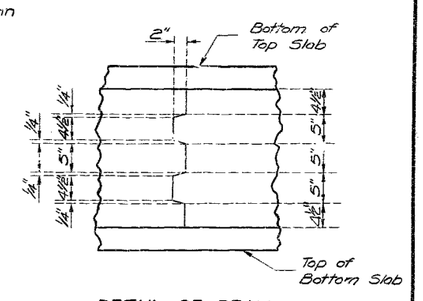

DETAIL OF BEAM CONSTRUCTION JOINT KEY

BRIDGE: BANNISTER ROAD UNDERPASS

STATE ROAD: INTERSTATE ROUTE 435

IN KANSAS CITY

PROJECT NO. I-IS-435-1(58)(RTE. I-435) **STA.** 795+96.4

JACKSON **COUNTY**

THATCHER & PATIENT, INC.
DETAILED June 1966 BY Findlay
CHECKED June 1966 BY Wang

Note: This drawing is not to scale. Follow dimensions.

FOR INFORMATION ONLY **A16433, Sht. 5**

MISSOURI STATE HIGHWAY DEPARTMENT

FED. ROAD DIST. NO.	STATE	FED. AID PROJ. NO.	FISCAL YEAR	SHEET NO.	TOTAL SHEETS
5	MO.		19	150	

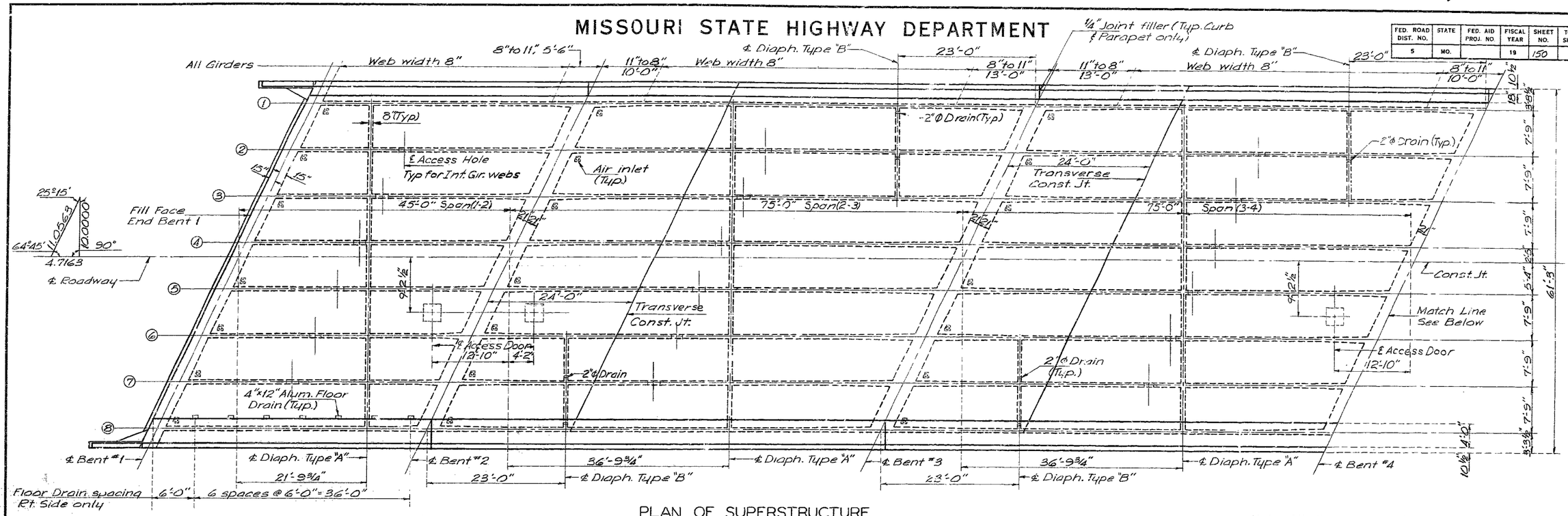

PLAN OF SUPERSTRUCTURE

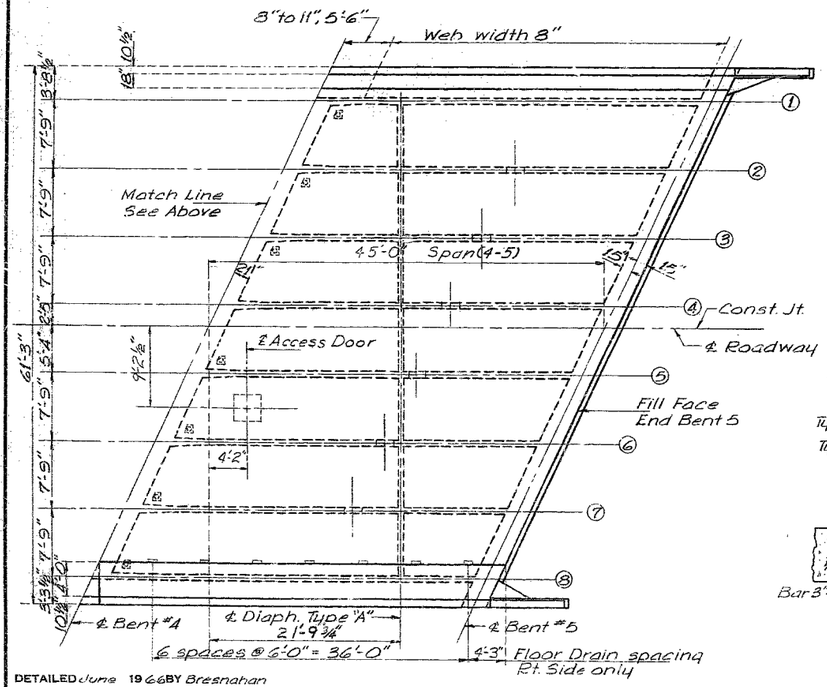

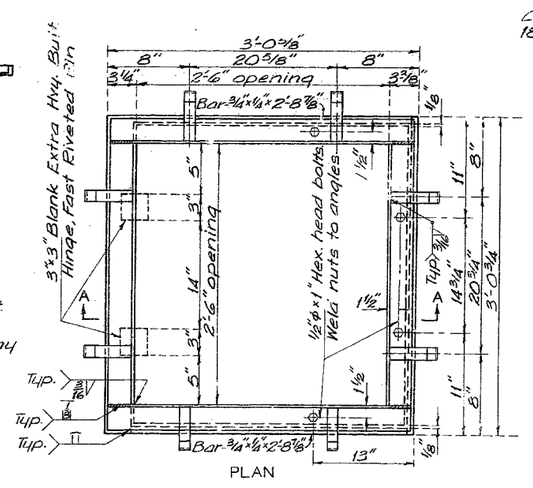

PLAN

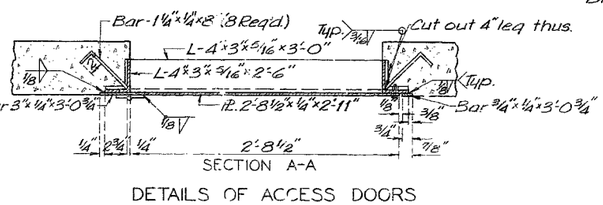

SECTION A-A

DETAILS OF ACCESS DOORS

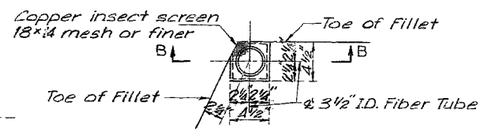

PLAN

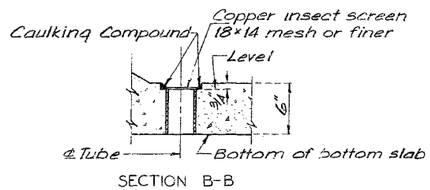

SECTION B-B

DETAILS OF AIR INLET

Note: Payment for furnishing and placing fiber tube, copper screen and caulking compound shall be included in price bid for other items of work.

Note: All dimensions shown are horizontal. All diaphragms shall be placed perpendicular to ℄ of Roadway

For location of 2"ϕ Drain see Sheet 2 of 11.

Interior girder webs shall be widened symmetrically about ℄ of Girders. Exterior girder webs shall be widened on the inside face only.

Access doors to be assembled and in place while slab is being poured.

Bottom surface of door to be flush with bottom slab.

Weight of one door and frame is approximately 179 lbs.

Payment for furnishing and installing access doors and frames shall be made and considered fully covered under price bid for other items.

For details of Aluminum Floor Drains See Sheet 8 of 11

For location of access holes see sheet 6 and 9 of 11.

BRIDGE: BANNISTER ROAD UNDERPASS

STATE ROAD: INTERSTATE ROUTE 435

IN KANSAS CITY

PROJECT NO. I-IG-435-1(58)(RTE-I-435) **STA.** 795+96.4

JACKSON **COUNTY**

448

DETAILED June 1966 BY Bresnahan

CHECKED June 1966 BY Wang THATCHER & PATIENT INC

Note: This drawing is not to scale. Follow dimensions.

Sheet No. 5 of 11.

A-1643

MISSOURI STATE HIGHWAY DEPARTMENT

FED. ROAD DIST. NO.	STATE	FED. AID PROJ. NO.	FISCAL YEAR	SHEET NO.	TOTAL SHEETS
5	MO.		19	151	

Note: For tranverse construction joint details see Sheet No. 8 of 11.

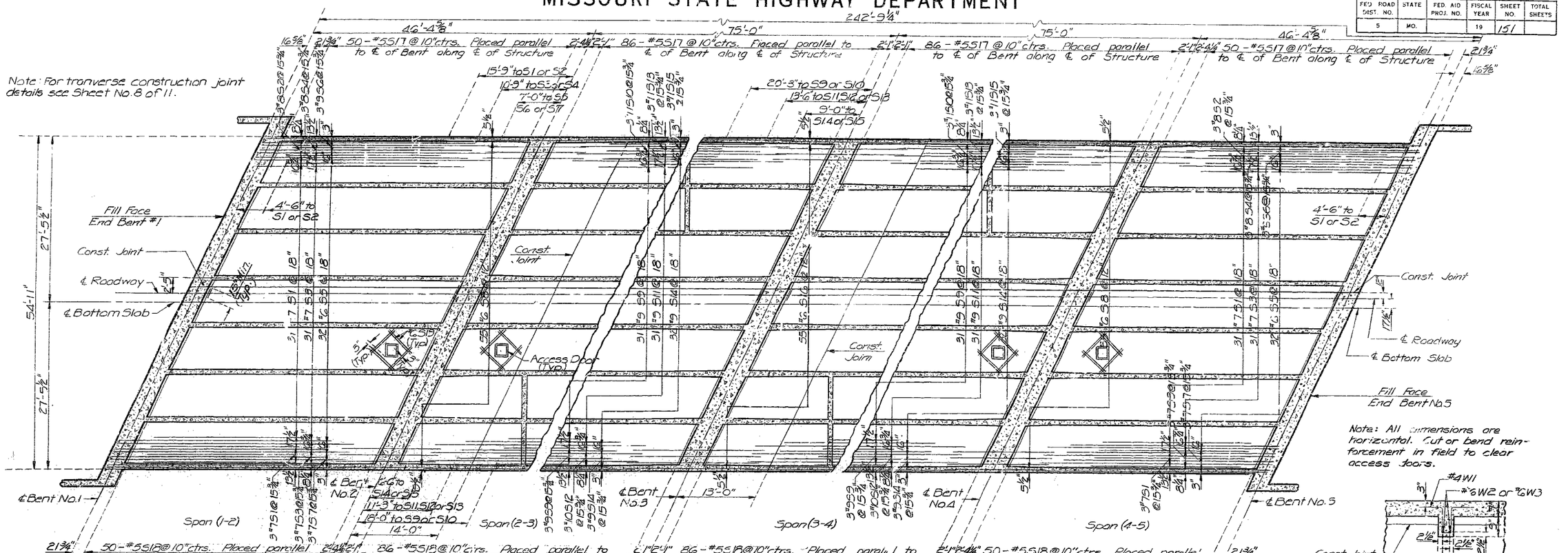

HORIZONTAL SECTION SHOWING BOTTOM SLAB REINFORCEMENT

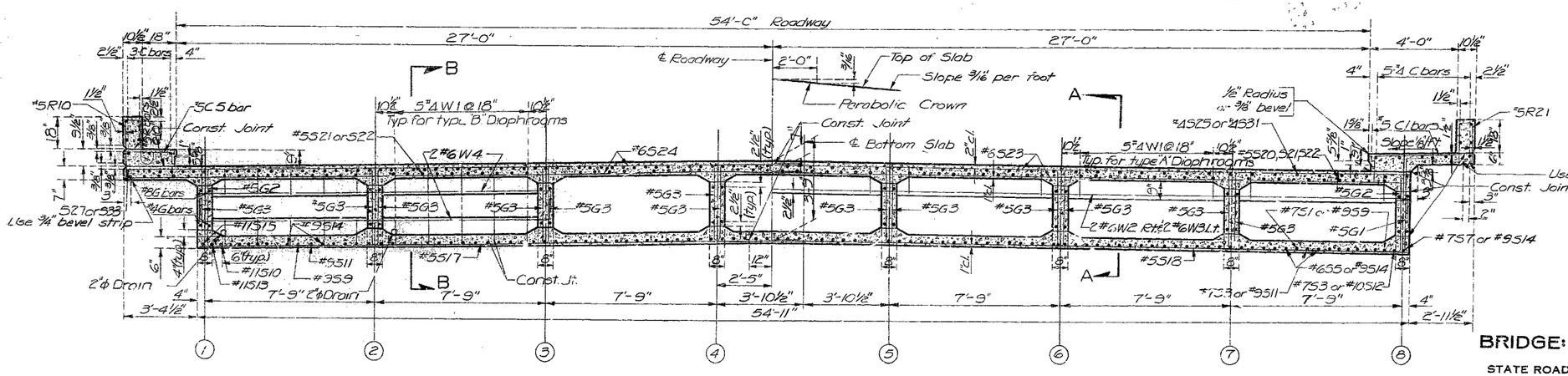

HALF SECTION NEAR TYPE "B" DIAPHRAGMS

HALF SECTION NEAR TYPE "A" DIAPHRAGMS

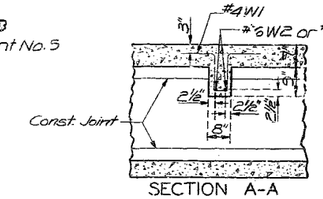

Note: Curbs and Parapets to be cast independently of Slab. For details of curb and parapet not shown see Sheet No. 8 of 11.
For longitudinal construction joint details see Sheet No. 7 of 11.
For location of Floor Drains, Air Inlets and Access Doors see Sheet No. 5 of 11.

BRIDGE: BANNISTER ROAD UNDERPASS

STATE ROAD: INTERSTATE ROUTE 435
IN KANSAS CITY

PROJECT NO. I-IG-435-1(58)(RTE. I-435) **STA.** 795+96.4

JACKSON COUNTY

A-1643

449

THATCHER & PATIENT, INC.
DETAILED June 1966 BY Findlay
CHECKED June 1966 BY Wanz

Note: This drawing is not to scale. Follow dimensions.

Sheet No. 6 of 11.

MISSOURI STATE HIGHWAY DEPARTMENT

FED. ROAD DIST. NO.	STATE	FED. AID PROJ. NO.	FISCAL YEAR	SHEET NO.	TOTAL SHEETS
5	MO.		19	152	

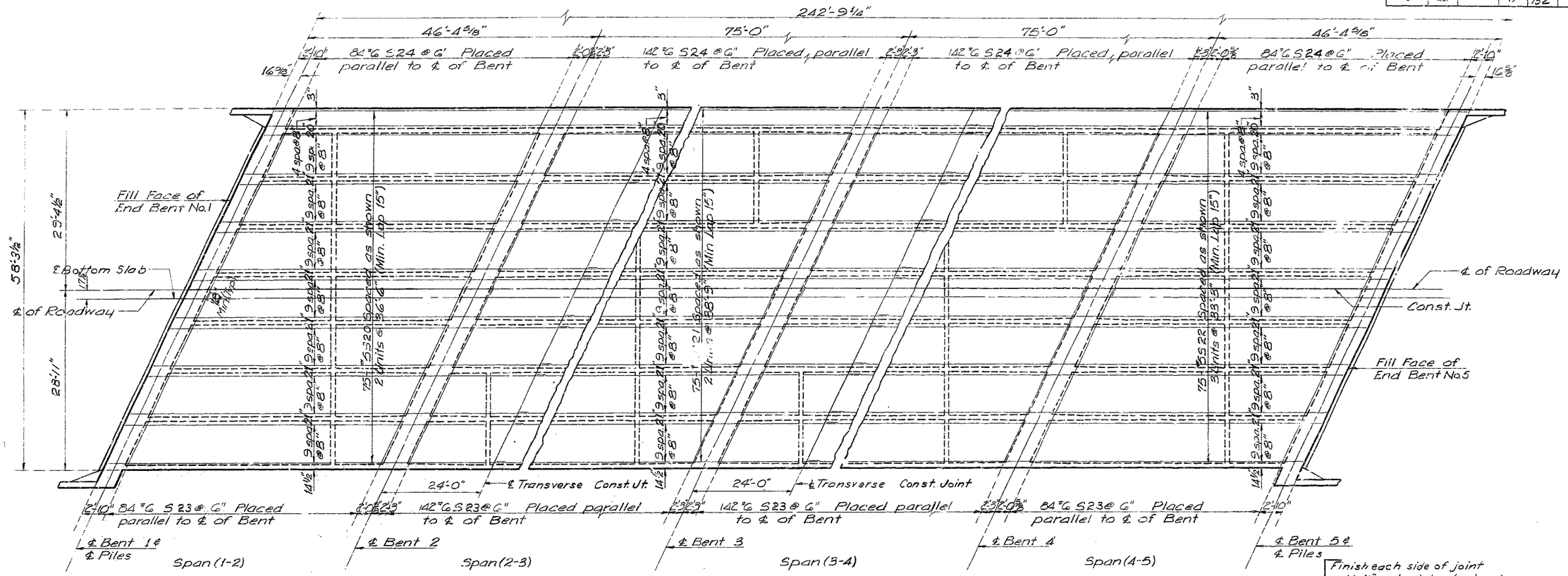

PLAN OF TOP SLAB SHOWING BOTTOM REINFORCEMENT

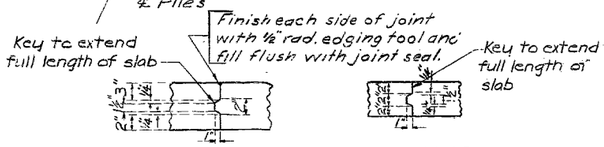

DETAIL OF LONGITUDINAL CONST. JOINTS

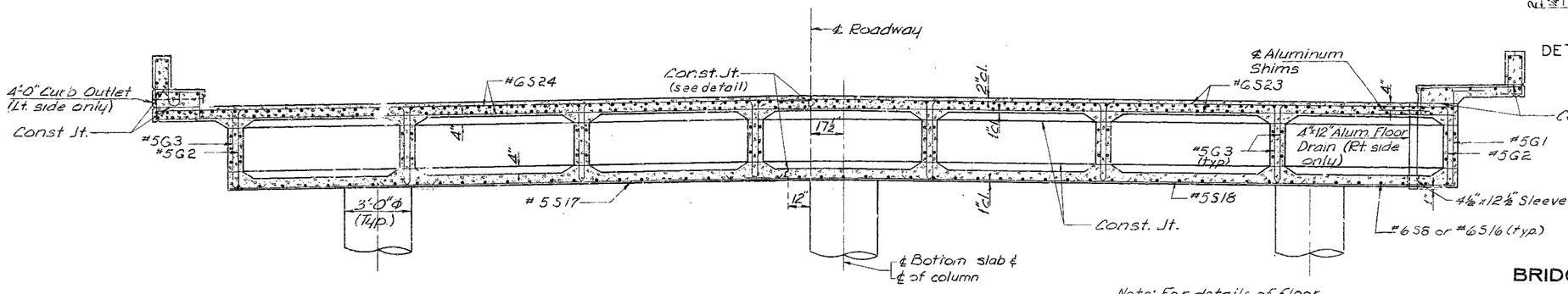

SECTION NEAR INT. BENT

Note: For details of floor drain see Sheet 8 of 11.
For details of transverse construction joint, see Sheet 8 of 11.
For details of curbs, parapets and sidewalk not shown see sheet 6 of 11

BRIDGE: BANNISTER ROAD UNDERPASS

STATE ROAD: INTERSTATE ROUTE 435
IN KANSAS CITY

PROJECT NO. I-IG-435-1(58)(RTE. I-435) **STA.** 795+96.4

JACKSON **COUNTY**

A-1543

450

THATCHER & PATIENT, INC
DETAILED June 1966 BY Brasnahan
CHECKED June 1966 BY Wang

Note: This drawing is not to scale. Follow dimensions.

MISSOURI STATE HIGHWAY DEPARTMENT

FED. ROAD DIST. NO.	STATE	FED. AID PROJ. NO.	FISCAL YEAR	SHEET NO.	TOTAL SHEETS
5	MO.		19	153	

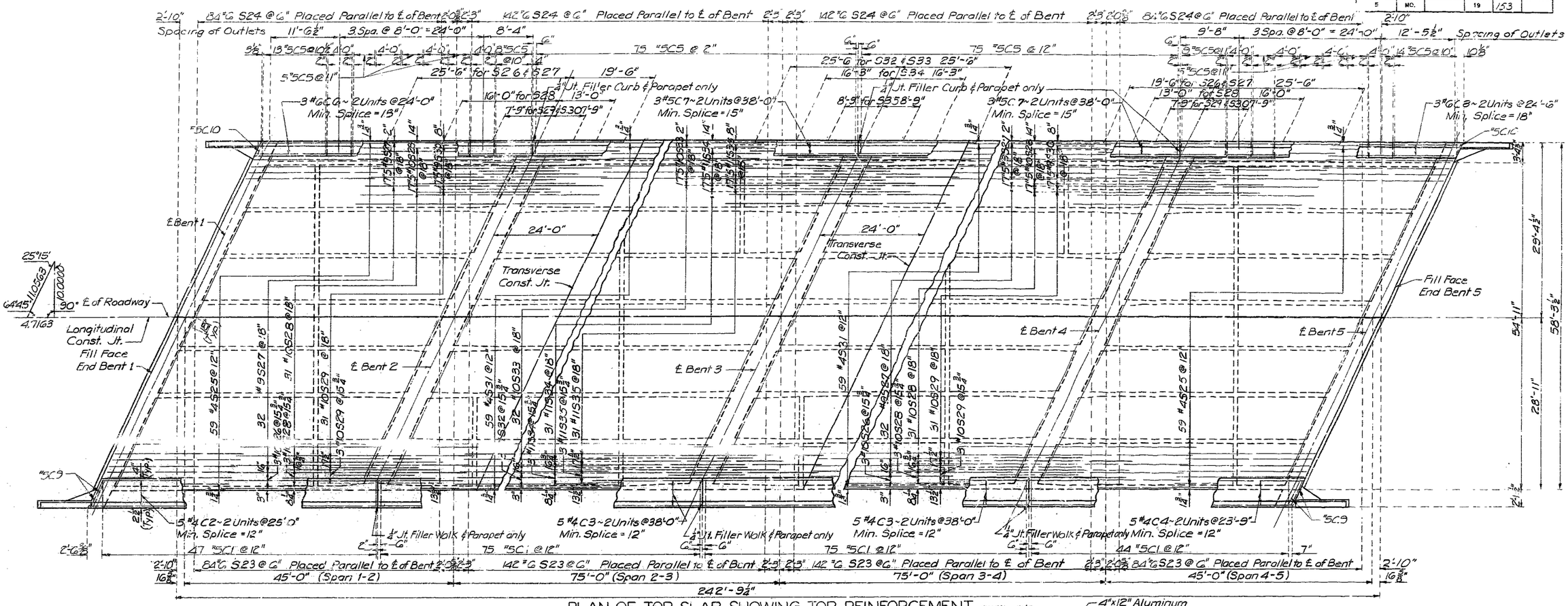

PLAN OF TOP SLAB SHOWING TOP REINFORCEMENT

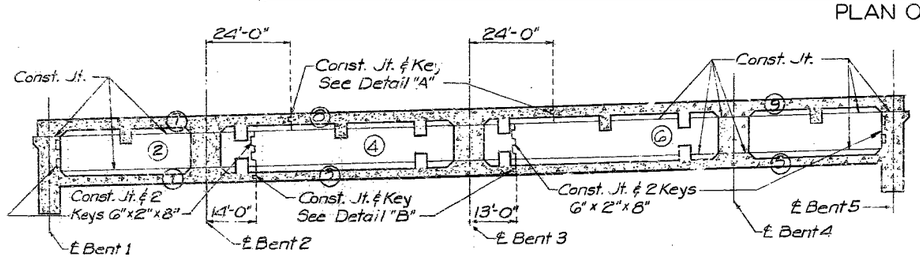

LONGITUDINAL SECTION SHOWING POURING SEQUENCE

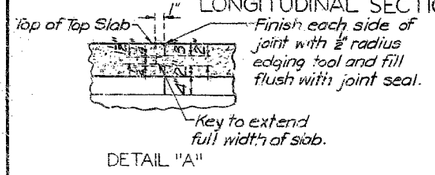

DETAIL "A"

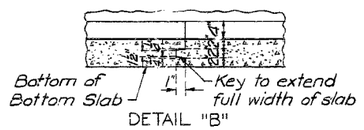

DETAIL "B"

Note: Numbers in circles indicate the basic pouring sequence. Each pour shall be completed on both sides of the longitudinal construction joint prior to proceeding to the next sequence.

The contractor shall use an approved oscillating screed type, self-propelled mechanical finishing machine and shall pour roadway slabs at a rate of not less than 25 cubic yards per hour. He shall observe the basic pouring sequence unless he can demonstrate to the engineer that he can pour and satisfactorily finish the superstructure concrete at a rate which will permit the combining of such of the basic pours as may be specifically designated by the engineer as being compatible with design. Finishing machine loads will not be permitted on concrete less than 48 hours old.

With use of forms and basic falsework meeting the approval of the engineer, the girder webs and diaphragms may be poured with the bottom slab sections on which they bear.

All forms shall be removed from the interior of box girders except top slab forms which may be left in place.

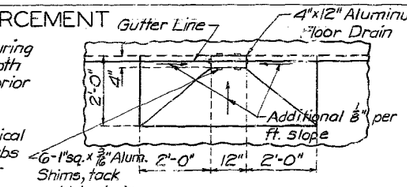

TYPICAL DETAIL AT FLOOR DRAIN
(14 Required)

Note: Cut transverse reinforcing steel in field and shift longitudinal reinforcing steel to clear drains.

Floor drains shall be welded 5/16" aluminum sheets, A.S.T.M. B209 alloy 3003-H14 or 6061-T6.

Payment for furnishing and placing 4"x12" Aluminum Floor Drains shall be included in price bid for Class B1 concrete.

Provide 4½"x1'-0½" sleeve in bottom slab. Place drain during top slab pour.

For location of Aluminum Floor Drains see sheet 7 of 11.

Note: All dimensions shown are horizontal.

For reinforcing steel in parapets see sheet 10 of 11.

For details of curbs, sidewalk and parapets not shown see sheets 6 and 7 of 11.

For details of Longitudinal Construction Joint see sheet 7 of 11.

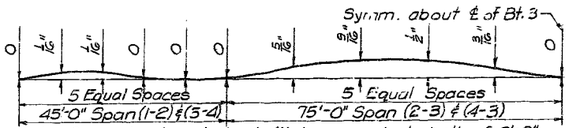

Note: Superstructure to be built to a constant depth of 3'-9".

CAMBER DIAGRAM

BRIDGE BANNISTER ROAD UNDERPASS

STATE ROAD INTERSTATE ROUTE 435

IN KANSAS CITY

PROJECT NO. I-IG-435-1(58)(RTE. I-435) **STA.** 795+96.4

JACKSON **COUNTY**

A-1643

THATCHER & PATIENT, INC.
DETAILED June 1966 BY Barry
CHECKED June 1966 BY Wong

Note: This drawing is not to scale. Follow dimensions.

Sheet No. 8 of 11.

151

MISSOURI STATE HIGHWAY DEPARTMENT

FED. ROAD DIST. NO.	STATE	FED. AID PROJ. NO.	FISCAL YEAR	SHEET NO.	TOTAL SHEETS
5	MO.		19	154	

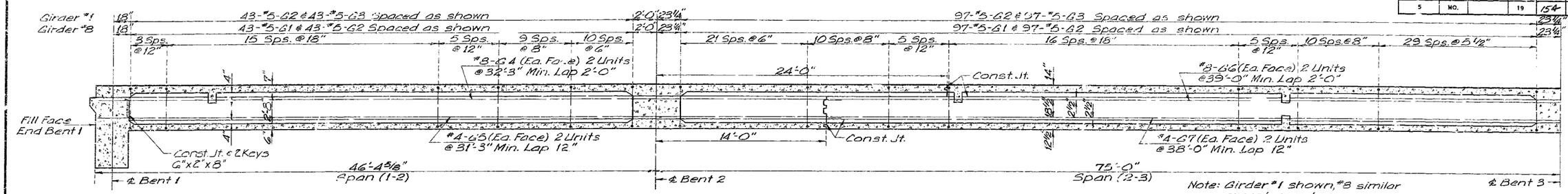

Note: Girder #1 shown, #8 similar except as shown.

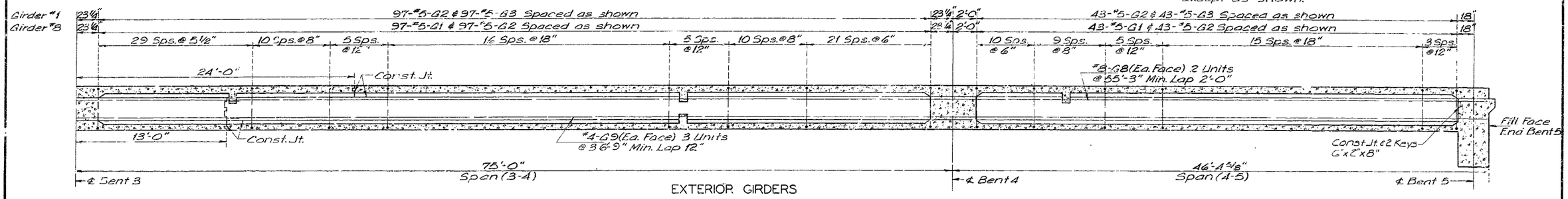

EXTERIOR GIRDERS

Note: Girder #2 shown. #3,4,5,6 & 7 similar.

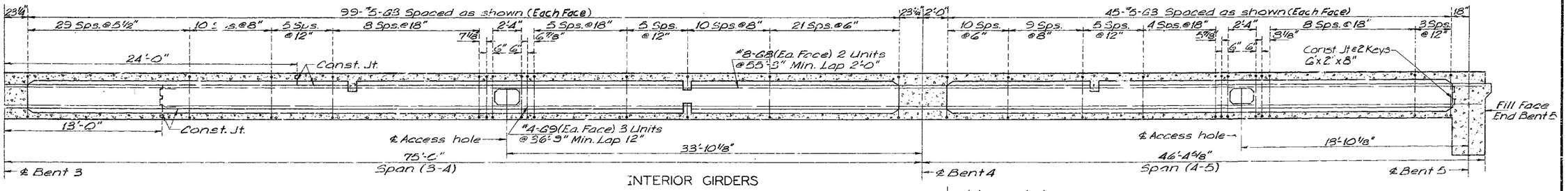

INTERIOR GIRDERS

Note: Longitudinal dimensions shown are horizontal.
G1, G2 & G3 Bars are spaced along ℄ of Girder and placed parallel to ℄ of Bent.
See sheet 6 of 11 for location of Girder web reinforcement.

GIRDER ELEVATIONS

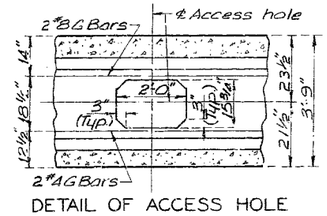

DETAIL OF ACCESS HOLE

BRIDGE: BANNISTER ROAD UNDERPASS
STATE ROAD: INTERSTATE ROUTE 435
IN KANSAS CITY
PROJECT NO. I-IG-435-1(58)(RTE. I-435) **STA.** 795+96.4
JACKSON **COUNTY**

A-1643

452

THATCHER & PATIENT, INC.
DETAILED June 1966 BY Bresnahan
CHECKED June 1966 BY Wang

Note: This drawing is not to scale. Follow dimensions.

Sheet No. 9 of 11.

MISSOURI STATE HIGHWAY DEPARTMENT

FED. ROAD DIST. NO.	STATE	FED. AID PROJ. NO.	FISCAL YEAR	SHEET NO.	TOTAL SHEETS
5	MO.		19	155	

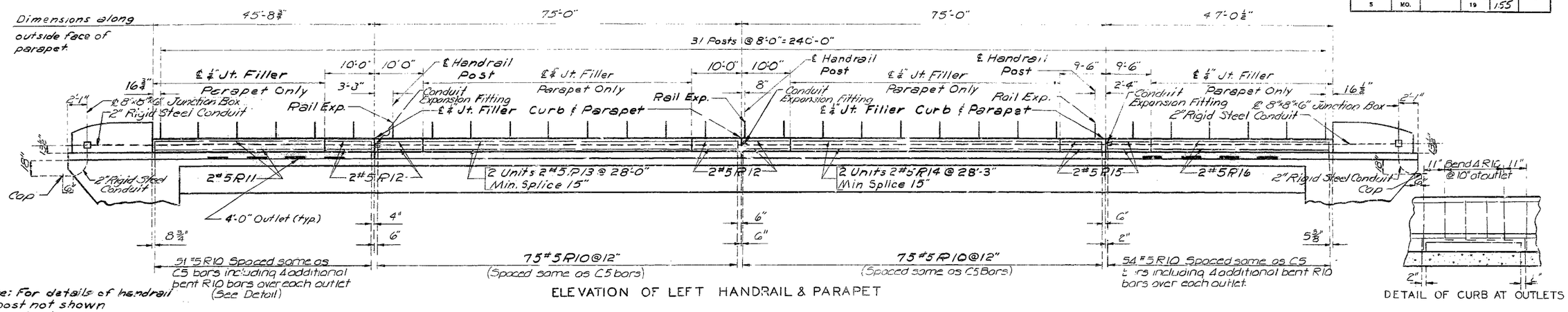

ELEVATION OF LEFT HANDRAIL & PARAPET

DETAIL OF CURB AT OUTLETS

Note: For details of handrail & post not shown see sheet 11 of 11.

For details of End Post see sheet 3 of 11.

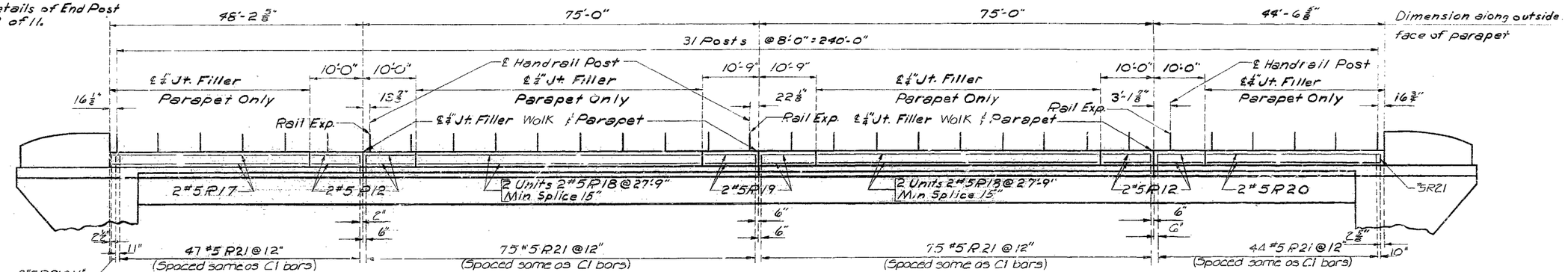

ELEVATION OF RIGHT HANDRAIL & PARAPET

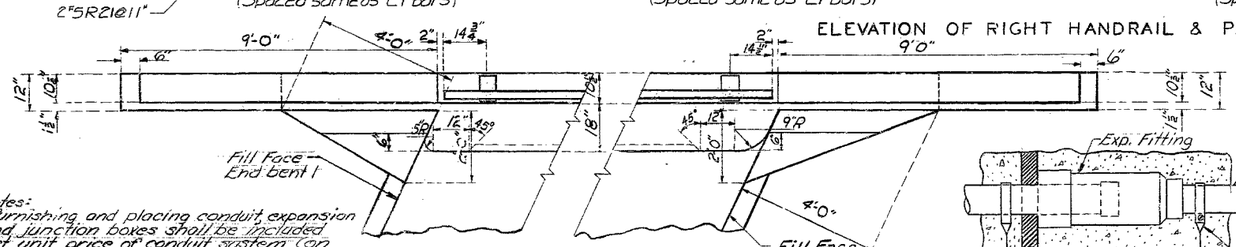

PLAN OF LEFT HANDRAIL AND END POSTS

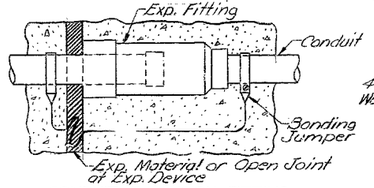

CONDUIT EXPANSION FITTING

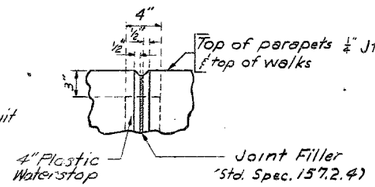

FILLED JOINT DETAILS

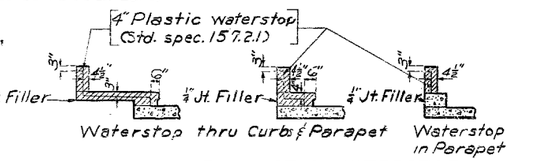

DETAIL OF PLASTIC WATERSTOP

Note: Plastic waterstop shall be Placed in all parapet and curb filled joints.

Cost of plastic waterstop Complete in place to be included in unit price bid for concrete.

Conduit Notes:
Cost of furnishing and placing conduit expansion fittings and junction boxes shall be included in contract unit price of conduit system (on structure)
Wiring to be furnished and installed by others.
All conduit to be rigid galvanized steel with 3" minimum cover in concrete.
Shift reinforcing steel in field where necessary to clear conduit and junction boxes.
Galvanized Expansion Fittings shall provide a minimum of movement in either direction of 4" at open joints and 1" at filled joints. Fittings shall be equal to O.Z. Elec. Mfg. Co. Expansion Fittings Ax or Ex with approved Bonding Jumper.
All parapet junction boxes shall be flush mounted and equal to O.Z. Elec. Mfg. Co. Type V.R.
Use 1/2" drain holes at low points of conduit and junction boxes.

Note: Omit curve on curb at ends of bridge where drain basin is provided on approach slab.

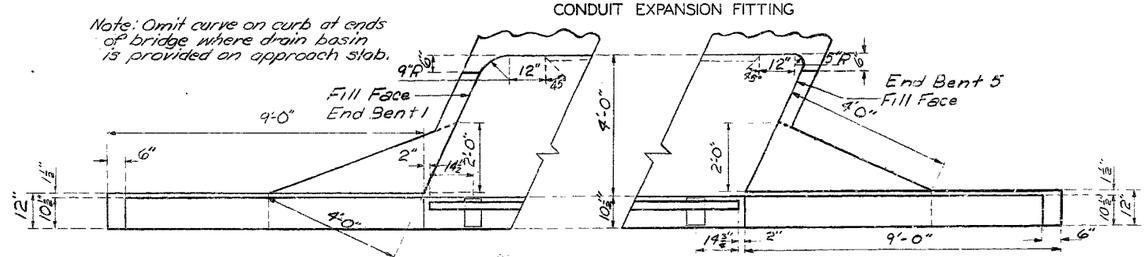

PLAN OF RIGHT HANDRAIL AND END POSTS

BRIDGE: BANNISTER ROAD UNDERPASS

STATE ROAD INTERSTATE ROUTE 435

IN KANSAS CITY

PROJECT NO. I-IG-435-1(58)(RTE. I-435) **STA.** 795+96.4

JACKSON **COUNTY**

A-1643

THATCHER & PATIENT, INC.
DETAILED June 1966 BY Forgy
CHECKED June 1966 BY Wang

Note: This drawing is not to scale. Follow dimensions.

Sheet No. 10 of 11.

453

FOR INFORMATION ONLY

A16433, Sht. 11

MISSOURI STATE HIGHWAY DEPARTMENT

FED ROAD DIST NO	STATE	FED AID PROJ NO	FISCAL YEAR	SHEET NO	TOTAL SHEETS
5	MO		19	156	

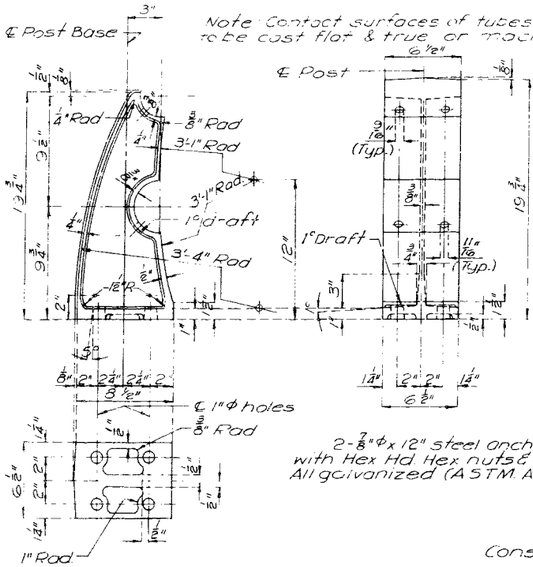

HANDRAIL POST

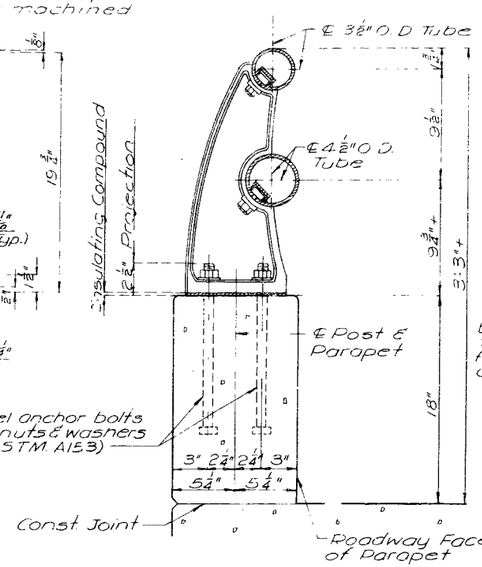

SECTION THRU HANDRAIL

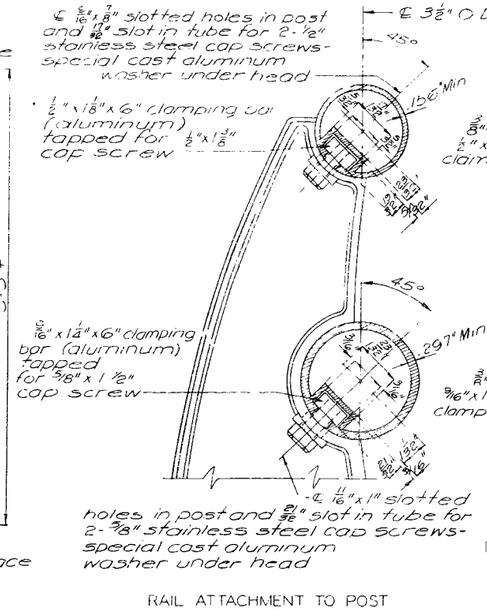

RAIL ATTACHMENT TO POST

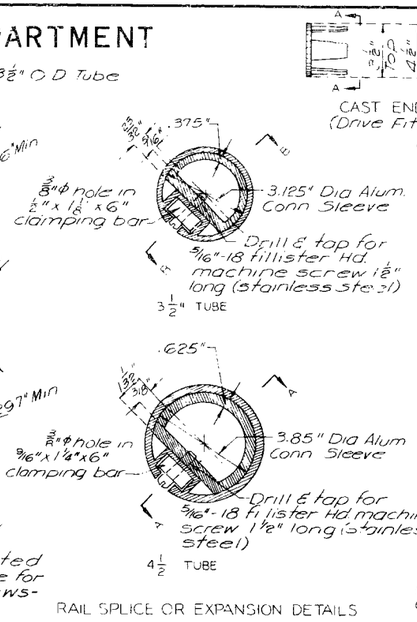

RAIL SPLICE OR EXPANSION DETAILS

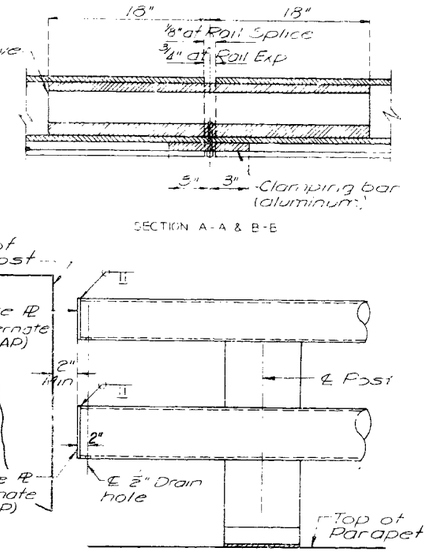

ELEVATION AT END RAIL POST

TWO TUBE ALUMINUM RAIL

GENERAL NOTES:

Top of curbs and parapets to be built parallel to grade with curb and parapet joints (except at end posts) normal to grade.

All exposed edges of end posts shall have ½" bevel. All exposed edges of curbs and parapets shall have ½" radius or ⅜" bevel.

All handrail posts shall be set normal to grade.

Aluminum tube handrail shall be bent to conform to vertical and horizontal alignment of parapet.

Rail to be fabricated in two or three panel lengths unless otherwise approved.

All rail splices shall be located near the ¼ point between rail posts.

All outside corners of aluminum posts to have ⅜" radius except as noted.

All fillets ¼" except as noted.

All drafts 3° except as noted.

If the contractor desires, he may use drive fit cast aluminum end caps in lieu of welded aluminum closure plates.

See Special Provisions

Concrete end posts to be vertical.

454

No. 1.5.6	Revised
July 1964	Oct. 1965

THATCHER & PATIENT, INC.
DETAILED June 1966 BY For 34
CHECKED June 1966 BY Wang

BRIDGE BANNISTER STREET UNDERPASS

STATE ROAD INTERSTATE ROUTE 435

IN KANSAS CITY

PROJECT NO. I-IC-435-1(58) RTE. I-435 **STA.** 795 98 4

JACKSON **COUNTY**

A-1643

Note: This drawing is not to scale. Follow dimensions.

Sheet No. 11 of 11.

MISSOURI STATE HIGHWAY DEPARTMENT

FED. ROAD DIST. NO.	STATE	FED. AID PROJ. NO.	FISCAL YEAR	SHEET NO.	TOTAL SHEETS
5	MO.		19	146	

FINAL PLANS

Note. For location of Rail Post Expansion see sheet No. 10 of 11.

45', 75', 75', 45' Continuous Box Girder Spans

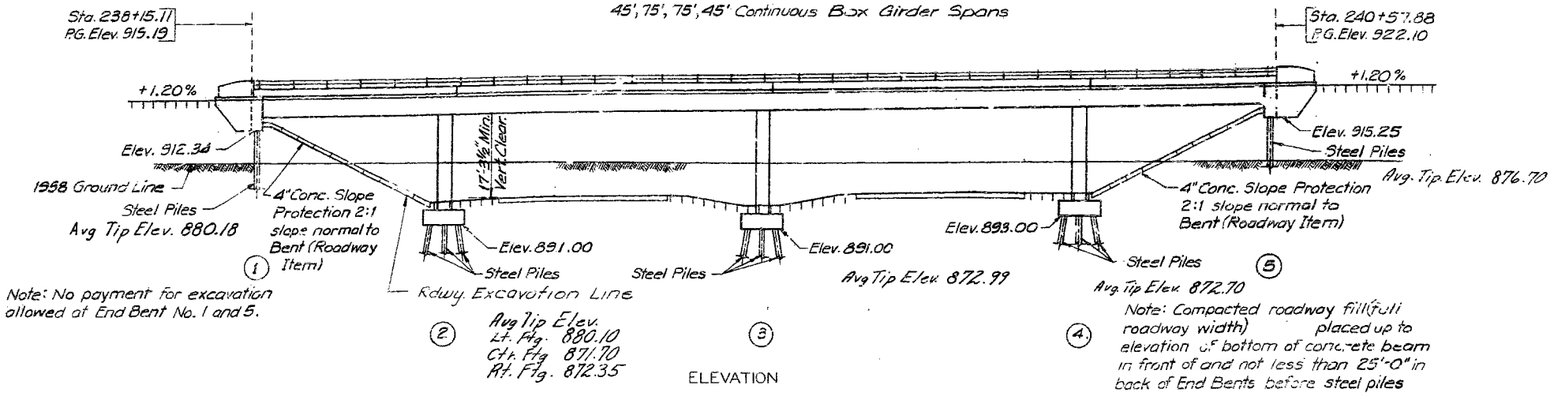

Note: No payment for excavation allowed at End Bent No. 1 and 5.

Avg Tip Elev.
Lt. Fig. 880.10
Ctr. Fig 871.70
Rt. Fig. 872.35

Note: Compacted roadway fill(full roadway width) placed up to elevation of bottom of concrete beam in front of and not less than 25'-0" in back of End Bents before steel piles driven.

ELEVATION

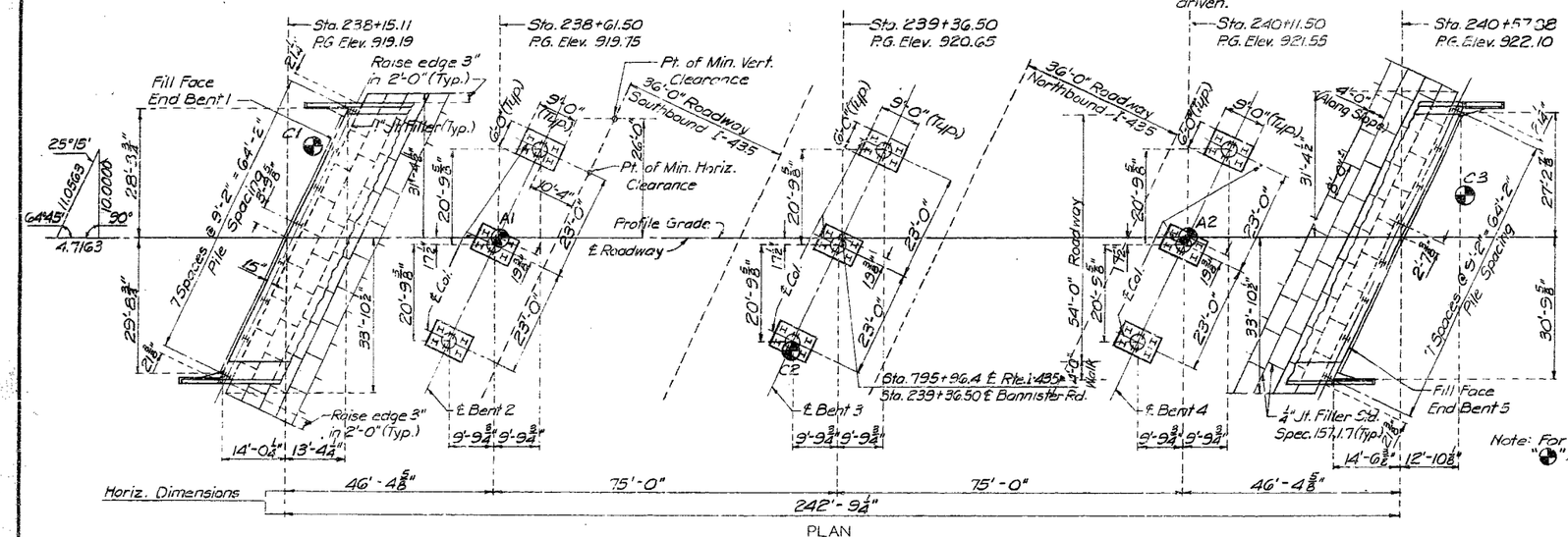

PLAN

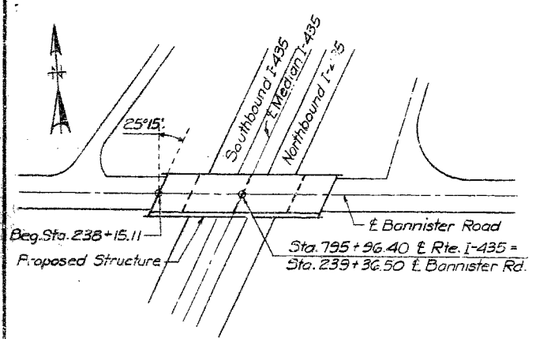

LOCATION SKETCH

PILE DATA						
BENT NO.		1	2	3	4	5
Pile Type and Size		10BP42	10BP42	10BP42	10BP42	10BP42
Number		8	18	18	18	8
Approximate Length	Ft.	34	Lt. 12 / Ctr. 20 / Rt. 20	19	21	40
Design Bearing	Tons	38	54	56	54	38
Hammer Energy Required	Ft. Lbs.	8,600	12,700	13,200	12,700	8,600

Minimum energy requirement of hammer based on plan length and design bearing value of piles. Increase by the factor (W+w)/2W when the weight of the ram (W) is less than the weight of the pile(w). All piles driven to practical refusal.

GENERAL NOTES:

Design Specifications A.A.S.H.O. - 1961
Loading H320-44 (15 #/sq. ft. Future Wearing Surface)
Earth 120#, Equivalent Fluid Pressure 30#
Class B Concrete (substructure) f_c = 1,200 psi
Class B1 Concrete (superstructure) f_c = 1,600 psi
Reinforcing Steel f_s = 20,000 psi
Steel Pile (A.S.T.M. A36 GBT) f_b = 9,000 psi
Superstructure deck surface sealed.

In lieu of painting, the access doors, the contractor preferred to galvanize this material. All galvanizing done after fabrication. Cost of galvanizing included in price bid for other items

Note: For Boring Data see sheet 2 of 11.
"⊕" Indicates location of Boring.

QUANTITIES				
Item		Substr.	Superstr.	Total
Class 1 Excavation For Structures	Cu. Yds.	167.0		167.0
Steel Pile in Place (10")	Lin. Ft.	1617		1617
Class B Concrete	Cu. Yds.	58.5		58.5
Class B1 Concrete	Cu. Yds.		971.7	971.7
Reinforcing Steel	Lbs.	2,530	333,160	335,690
H.S. Bridge Rail (Two Tube Type)	Lin. Ft.		485	485
Conduit System (on Structure)	Lump Sum		1	1
CONTINGENT ITEM				
Class 1 Excavation +25%	Cu. Yds.	24		24
10" Steel Piles (Adjust Charge)	Lin. Ft.	12		12

All Concrete and reinforcement in end posts, parapets and curbs is included with superstructure quantities.

All concrete and reinforcement above footings in Intermediate bents is included in superstructure quantities.

BENCHMARKS

BM "Elev. 919.62, □ on End of Northwest Wingwall" Bent No. 1, Sta. 238+15

SUBMITTED BY:
Jack M. Easley
REGISTERED PROFESSIONAL ENGINEER
MISSOURI NO. E-8243

STATE OF MISSOURI JACK M. EASLEY Number E-8243 REGISTERED PROFESSIONAL ENGINEER

THATCHER & PATIENT, INC.
DESIGNED June 1966 BY Wang
DETAILED June 1966 BY Barry
CHECKED June 1966 BY Brandhorst

Note: This drawing is not to scale. Follow dimensions.

Sheet No. 1A of 1

FINAL PLANS

BRIDGE BANNISTER ROAD UNDERPASS
STATE ROAD INTERSTATE ROUTE 435
IN KANSAS CITY
PROJECT NO. I-IG-435-1(58)(RTE. I-435) **STA.** 795+96.4
JACKSON **COUNTY**

SUBMITTED BY D.B. Gardner BRIDGE ENGINEER DATE 12/16/66
APPROVED BY M.G. Waller CHIEF ENGINEER DATE 12/16/66

STD. 54.00
A-1643

54

MISSOURI STATE HIGHWAY DEPARTMENT

FED. ROAD DIST. NO.	STATE	FED. AID PROJ. NO.	FISCAL YEAR	SHEET NO.	TOTAL SHEETS
5	MO.		19		

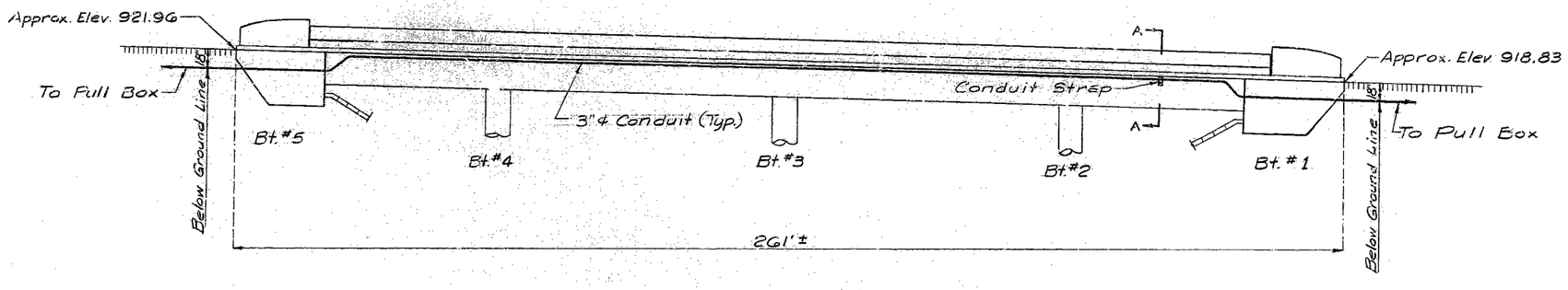

PARTIAL ELEVATION
NORTH SIDE OF BRIDGE

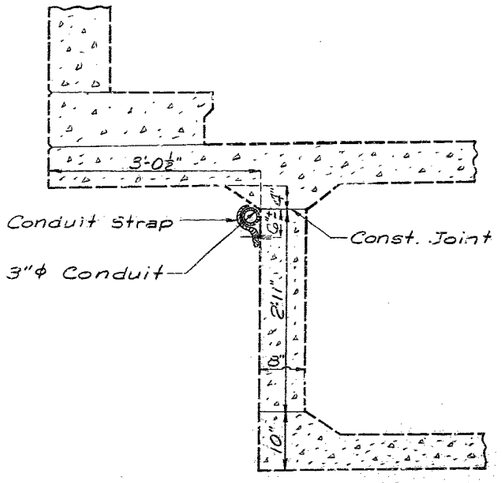

SECTION A-A

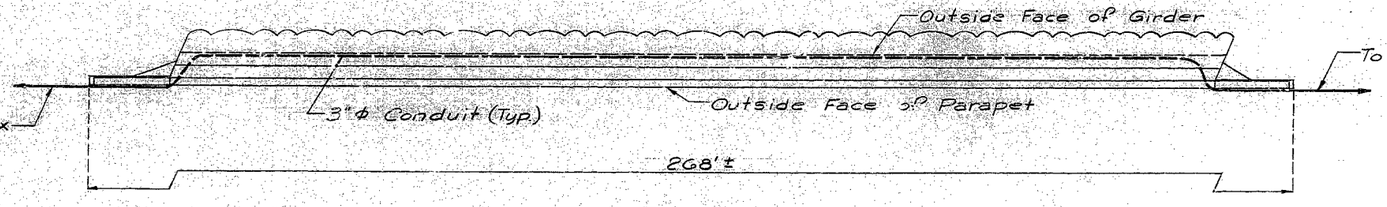

PARTIAL PLAN
NORTH SIDE OF BRIDGE

GENERAL NOTES

Conduit shall be 3" ϕ Rigid Steel, Galvanized.

Conduit shall be secured to concrete with straps at about 5'0" centers.

Conduit Straps shall be the one-hole Malleable Iron Pipe (Galv.) straps. These straps shall be secured to the concrete with anchors of the non-drilling type, equal to Red-Head (Phillips Drill Co.). The hole shall be pre-drilled with a conventional Carbide masonry bit.

Use ¾" ϕ deburred drain holes at low points of Conduit.

The cost of furnishing and erecting the Conduit System complete in place on Bridge shall be paid for as Conduit System on Bridge.

CONDUIT LAYOUT

BRIDGE: BANNISTER ROAD UNDERPASS

STATE ROAD: INTERSTATE ROUTE 435 IN KANSAS CITY

PROJECT NO. 4-U-435-53 (RTE. I-435) STA. 795+96.4

DETAILED MAY 1973 BY BRANDEL
CHECKED MAY 1973 BY PATTERSON

Note: This drawing is not to scale. Follow dimensions.

Sheet No. 1 of 1.

JACKSON COUNTY

A-1643A

MISSOURI STATE HIGHWAY DEPARTMENT

FED. ROAD DIST. NO.	STATE	FED. AID PROJ. NO.	FISCAL YEAR	SHEET NO.	TOTAL SHEETS
5	MO.		79	31	

U.I.P. Exist. (45', 75', 75', 45') Cont. Box Gdr. Spans
Remodel & Widen on South Side with (44.75', 75.25', 75.25', 44.75') P/S Conc. Box Gdr. Spans

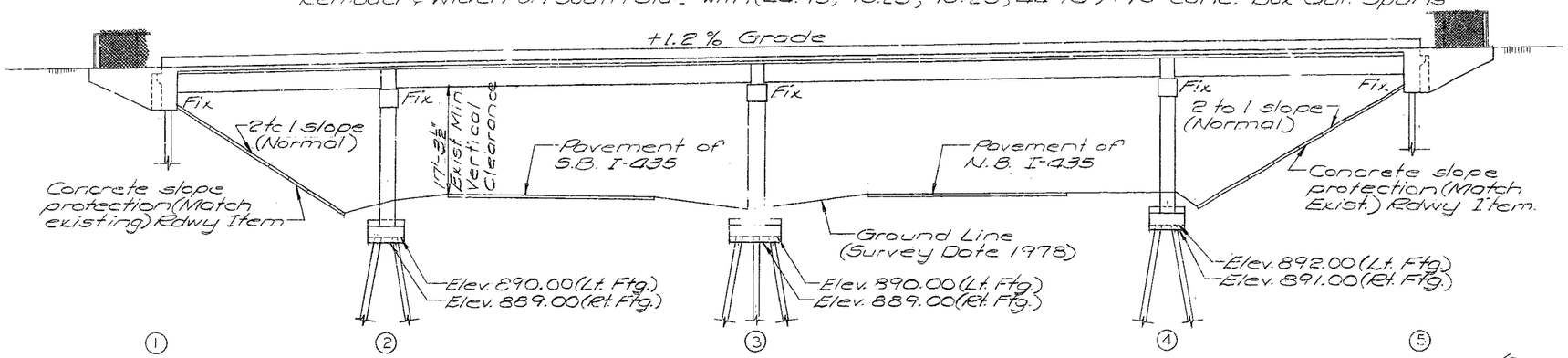

Note: Compacted roadway fill shall be completed to the final roadway section and up to the elevation of the bottom of the concrete beam within the limits of the structure and for not less than 25' in back of the fill face of the end bents before piles are driven for any pile driving within the embankment section.

GENERAL ELEVATION

Sta. 795+96.40 ℄ Med. Rte. I-435 = Sta. 239+36.50 ℄ Bannister Rd.

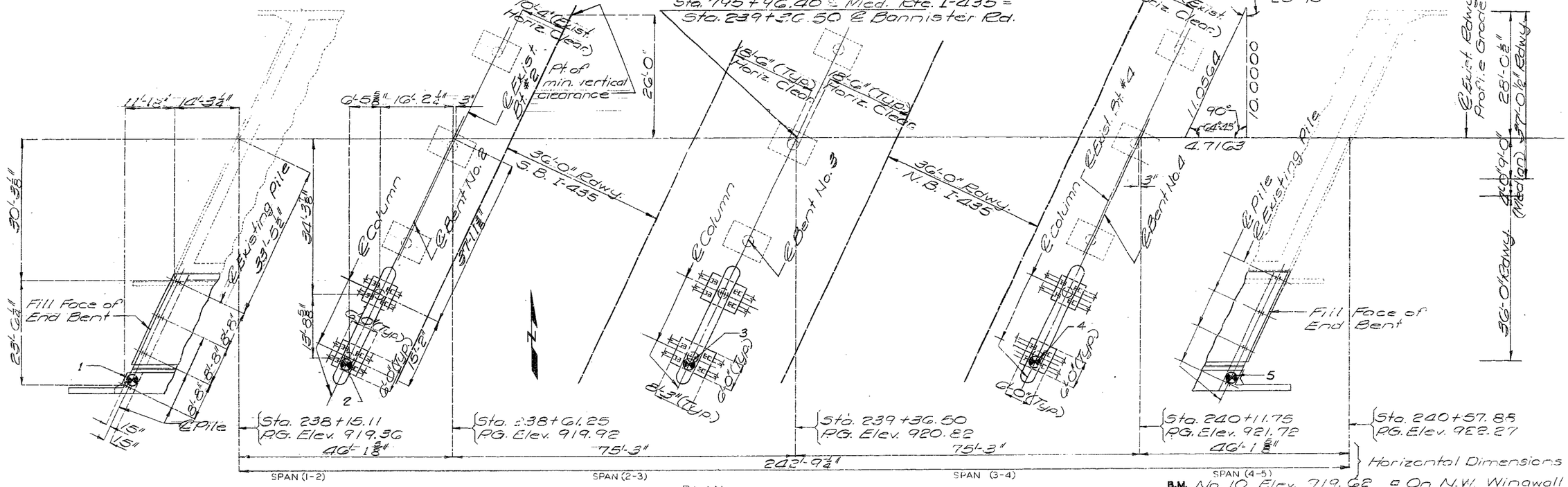

PLAN

Horizontal Dimensions

B.M. No. 10 Elev. 719.62 ℄ On N.W. Wingwall Bent No. 1 Lt. Sta. 238+15

Note: For Boring Data see Sht. No. 2.
"8" Indicates location of boring.
For General Notes, Quantities & Pile Data Box see Sht. No. 2.

BRIDGE: BANNISTER ROAD UNDERPASS

STATE ROAD INTERSTATE ROUTE 435

IN KANSAS CITY

PROJECT NO. STA. 795+96.40 L. MEDIAN

JOB NO. 4-1435-407 **RTE** I-435

JACKSON **COUNTY**

DATE 8-31-79

STD. 310.00
STD. 706.35
A-1643 R

DESIGNED MAR 1979
DETAILED JUNE 1979
CHECKED JULY 1979

Note: This drawing is not to scale. Follow dimensions.

Sheet No. 1 of 2 Sht.

MISSOURI STATE HIGHWAY DEPARTMENT

FED. ROAD DIST. NO.	STATE	FED. AID PROJ. NO.	FISCAL YEAR	SHEET NO.	TOTAL SHEETS
7	MO.		19	32	

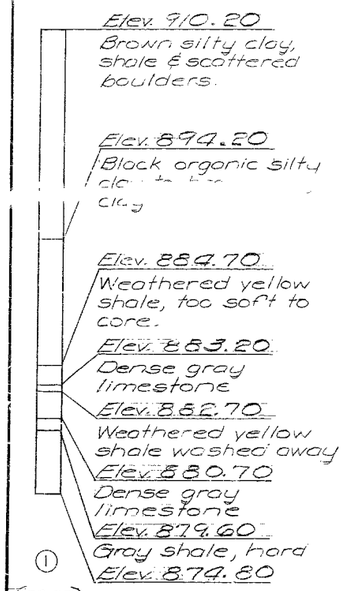

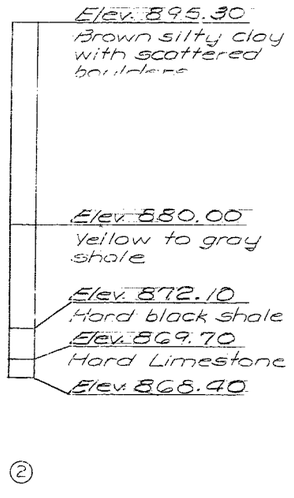

Note: For location of boring see Sht. No. 1

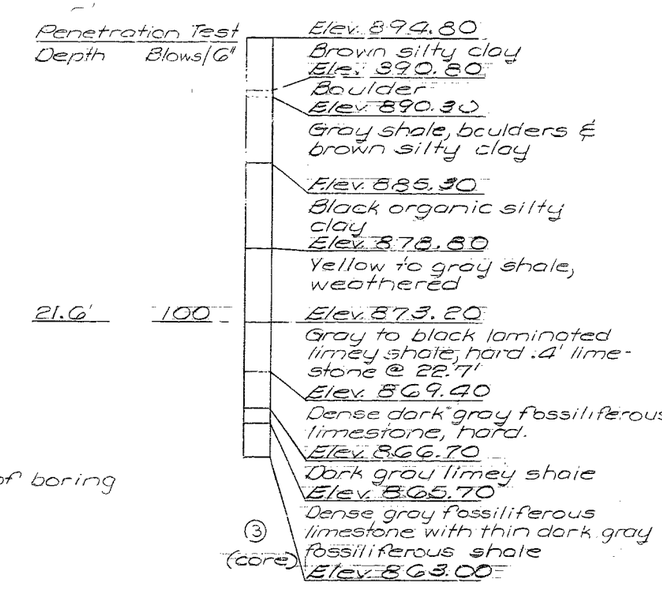

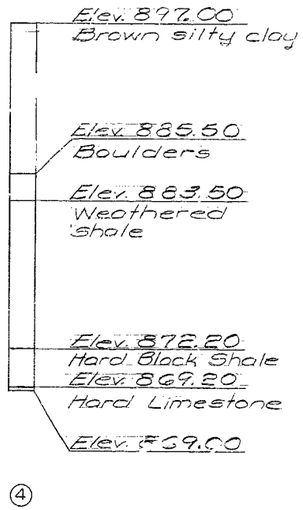

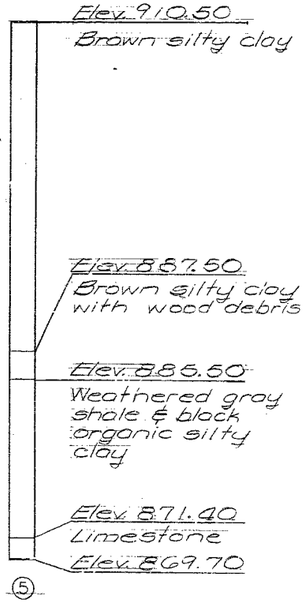

BORING DATA

ESTIMATED QUANTITIES

ITEM		SUBSTR.	SUPERSTR.	TOTAL
Class I Excavation	Cu. Yd.	115		115
Structural Steel Pile (HP10 x 42)	Lin. Ft.	567		567
Class B Concrete	Cu. Yd.	108.7		108.7
Class B2 Concrete	Cu. Yd.		246.4	246.4
Latex Concrete Wearing Surface	Sq. Yd.		1537	1537
Pedestrian Fence (72 in.)	Lin. Ft.		266	266
Longitudinal Preformed Compression Jt. Seal (2.0 in.)	Lin. Ft.		243	243
Prestressed Conc. Members, Box Section (145'-0" span)	Each		10	10
Prestressed Conc. Members, Box Section (175'-0" span)	Each		10	10
Reinforcing Steel (Grade 60)	Lbs.	13800	16650	30450
Reinforcing Steel (Epoxy)	Lbs.		27430	27430
Conduit System on Structure	Lump Sum			1
Special Work	Lump Sum			1

Note: All concrete above lower construction joint in end bents is included with superstructure quantities.
All reinforcement in the end bents is included with superstructure quantities.
Cost of Plain Neoprene Bearing Pads (½" thick) shall be included in price bid for other items.

GENERAL NOTES

Design Specifications: A.A.S.H.T.O. -1977 Load Factor Design
Design Loading:
HS 20-44 15#/sq. ft. F. I. Wear Surface. Modified 20,000# Tandem Axle.
Earth 115#. Equivalent Fluid Pressure 30#
Superstructure: Simply supported composite

Design Unit Stresses:
Class B Concrete (substructure) f'c = 3000 psi.
Class B2 Concrete (superstructure except prestressed box girders) f'c = 4000 p.s.i.
Reinforcing Steel (Grade 60) fy = 60,000 psi.
Steel Pile fb = 9000 p.s.i.

Note: For Prestressed Girder Stresses see Sht. No. 10.
Bearings shall be 60 durometer Neoprene Pads.
All joint filler shall meet the requirements of Std. Spec. 1057.2.4.
Falsework over existing lanes shall be constructed with a minimum vertical clearance of 15'-0" from crown of existing lanes and a minimum lateral clearance of 40'-0" centered on existing lanes.
Traffic over structure to be maintained during construction.
Minimum clearance to reinforcing steel shall be 1½" unless otherwise shown.
Outline of old work is indicated by light dashed lines. Heavy lines indicate new work.
Bars bonded in old concrete not removed shall be cleanly stripped and embedded into new concrete where possible. If length is available, old bars shall extend into new concrete at least 40 diameters for smooth bars and 30 diameters for deformed bars.

PILE DATA

BENT NO.	1	2	3-LT.	3-RT.	4-LT.	4-RT.	5-LT	5-RT
PILE TYPE AND SIZE	HP10x42	HP10x42	HP10x42	HP10x42	HP10x42	HP10x42	HP10x42	HP10x42
NUMBER	3	8	5	5	4	4	1	2
APPROXIMATE LENGTH FT	29	11	21	15	20	11	26	32
DESIGN BEARING TONS	47	56	53	53	56	56	47	47
HAMMER ENERGY RQD. FT. LB.	10,200	13,200	12,500	12,500	13,200	13,200	10,600	10,600

Note: Minimum energy requirement of hammer based on pile length and design bearing value of piles.
All pile shall be driven to practical refusal.

DETAILED June 1979
CHECKED July 1979

Note: This drawing is not to scale. Follow dimensions.

Sheet No. 2 of 21.

JACKSON COUNTY

A-1643R

MISSOURI STATE HIGHWAY DEPARTMENT

FED. ROAD DIST. NO.	STATE	FED. AID PROJ. NO.	FISCAL YEAR	SHEET NO.	TOTAL SHEETS
5	MO		79	33	

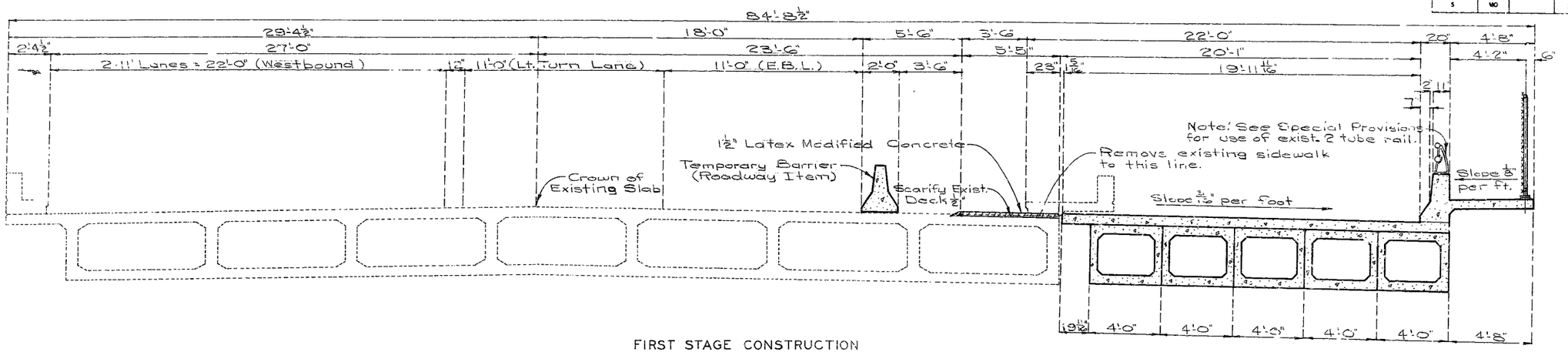

FIRST STAGE CONSTRUCTION

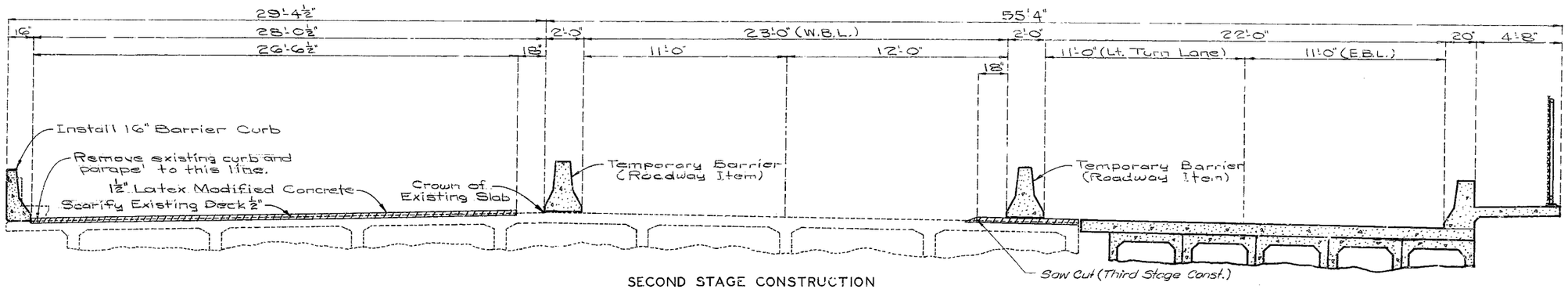

SECOND STAGE CONSTRUCTION

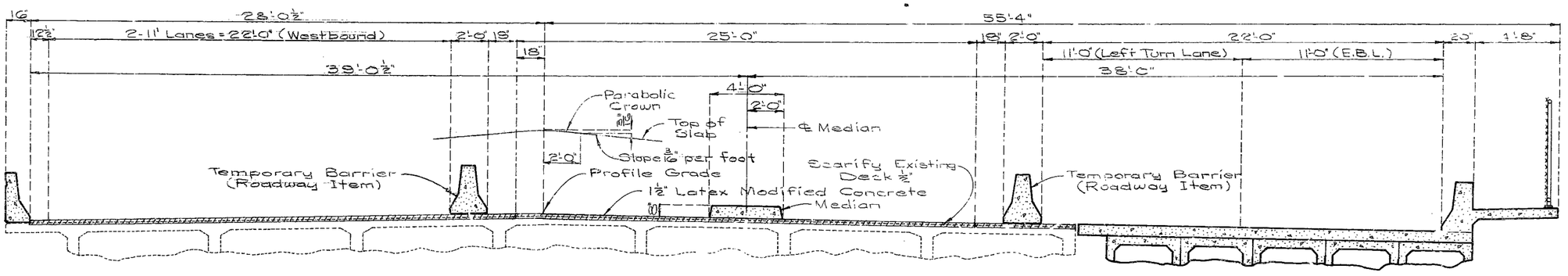

THIRD STAGE CONSTRUCTION

DETAILED MAY 1979
CHECKED JULY 1979

Note: This drawing is not to scale. Follow dimensions.

Sheet No. 3 of 21.

JACKSON COUNTY

A-1643R

MISSOURI STATE HIGHWAY DEPARTMENT

FED. ROAD DIST. NO.	STATE	FED. AID PROJ. NO.	FISCAL YEAR	SHEET NO.	TOTAL SHEETS
5	MO.		19	34	

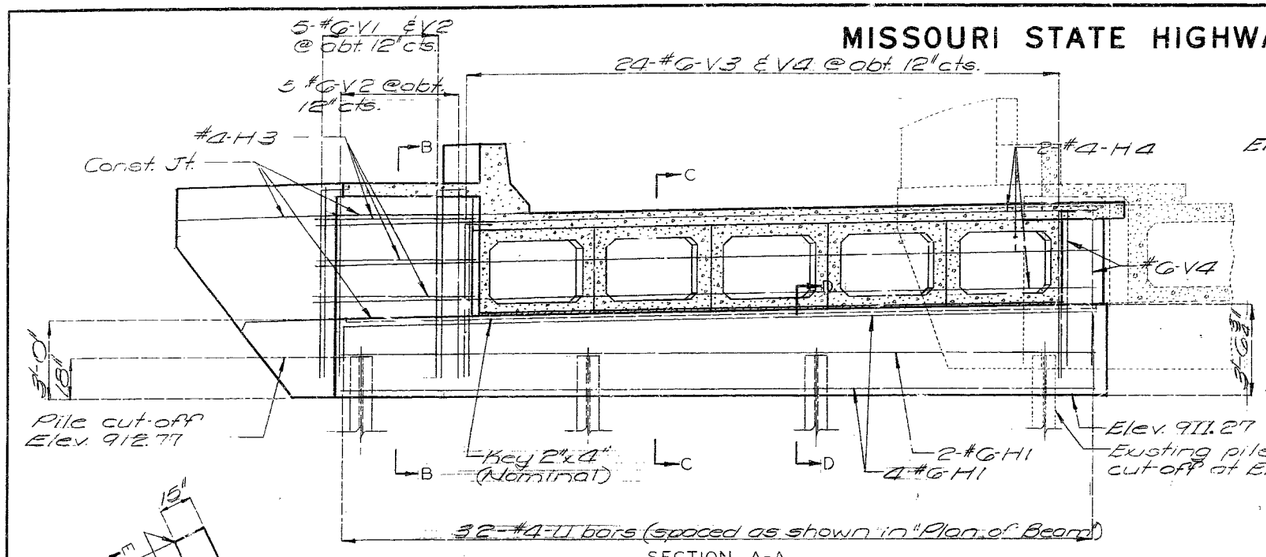

SECTION A-A

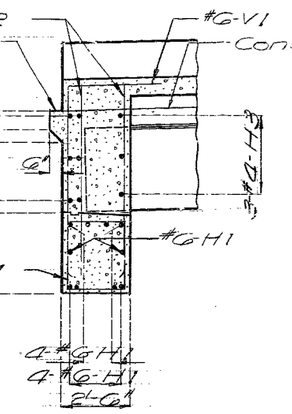

SECTION B-B

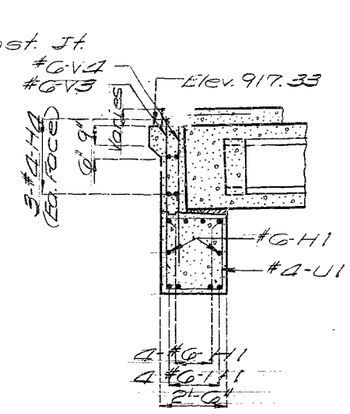

SECTION C-C

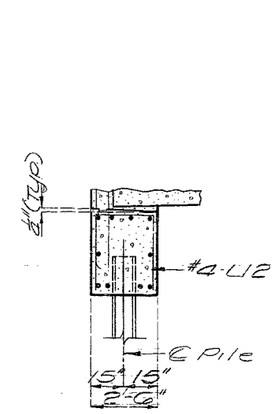

SECTION D-D

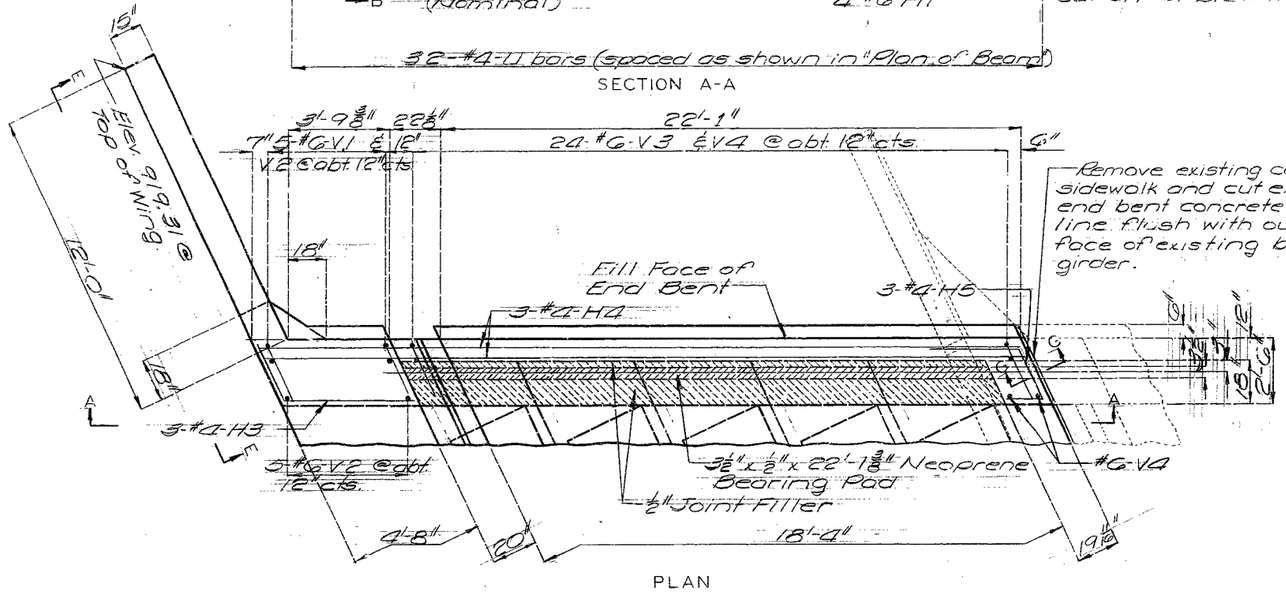

PLAN

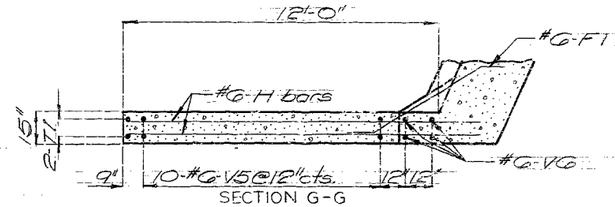

SECTION G-G

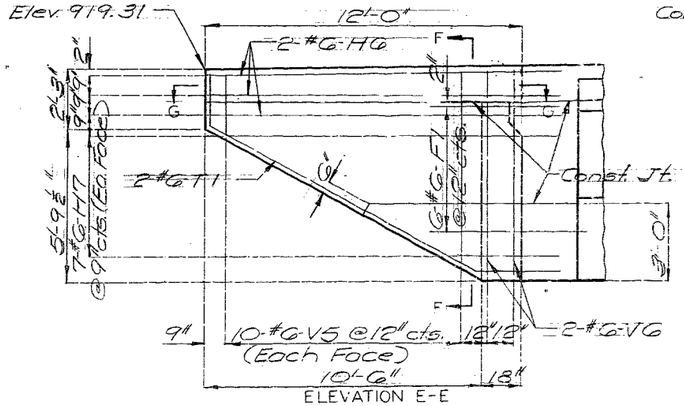

ELEVATION E-E

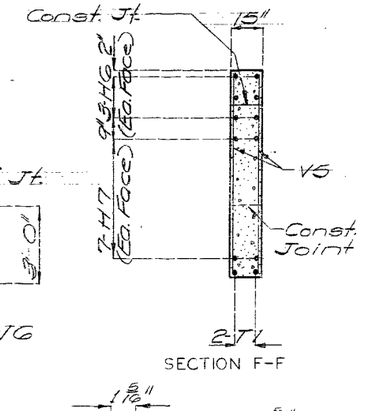

SECTION F-F

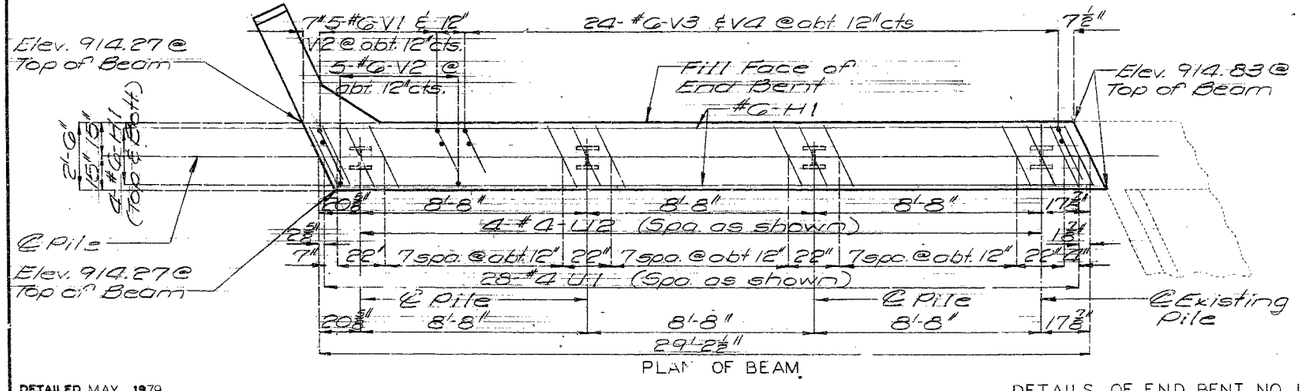

PLAN OF BEAM

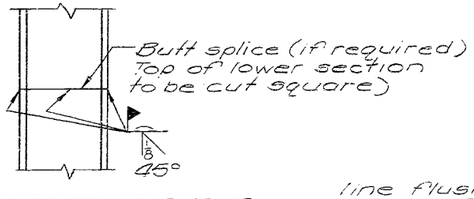

DETAIL OF STEEL PILE SPLICE

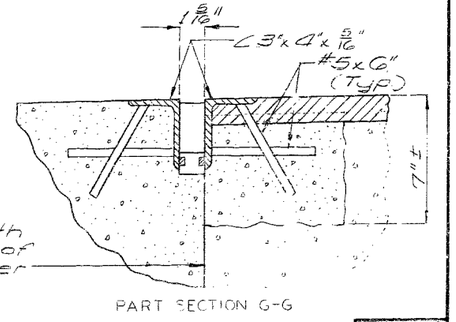

PART SECTION G-G

DETAILS OF END BENT NO. 1

DETAILED MAY 1979
CHECKED JULY 1979

Note: This drawing is not to scale. Follow dimensions.

Sheet No. 4 of 21.

JACKSON COUNTY

A-1643R

MISSOURI STATE HIGHWAY DEPARTMENT

FED. ROAD DIST. NO.	STATE	FED. AID PROJ. NO.	FISCAL YEAR	SHEET NO.	TOTAL SHEETS
5	MO.		19	35	

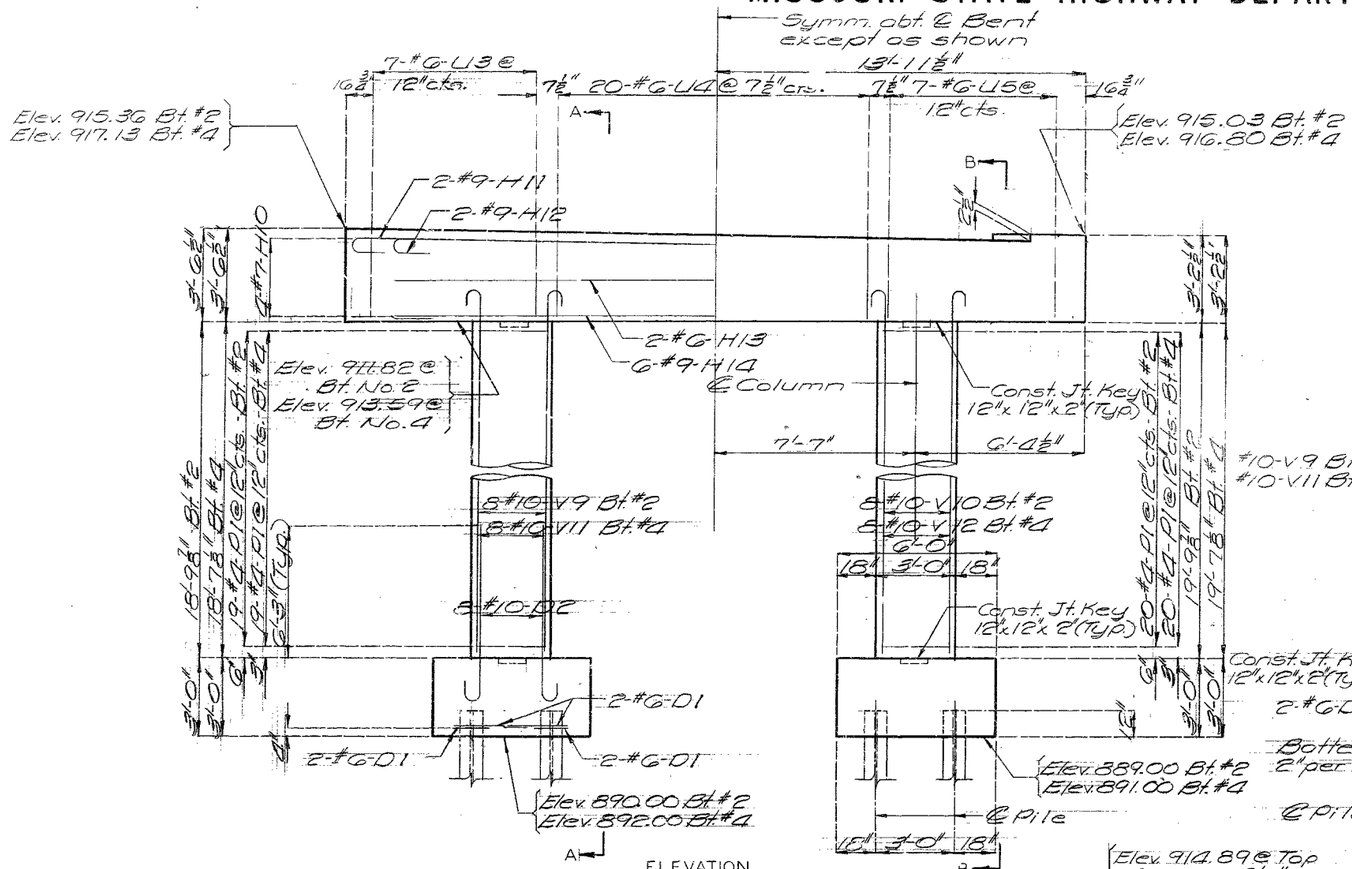

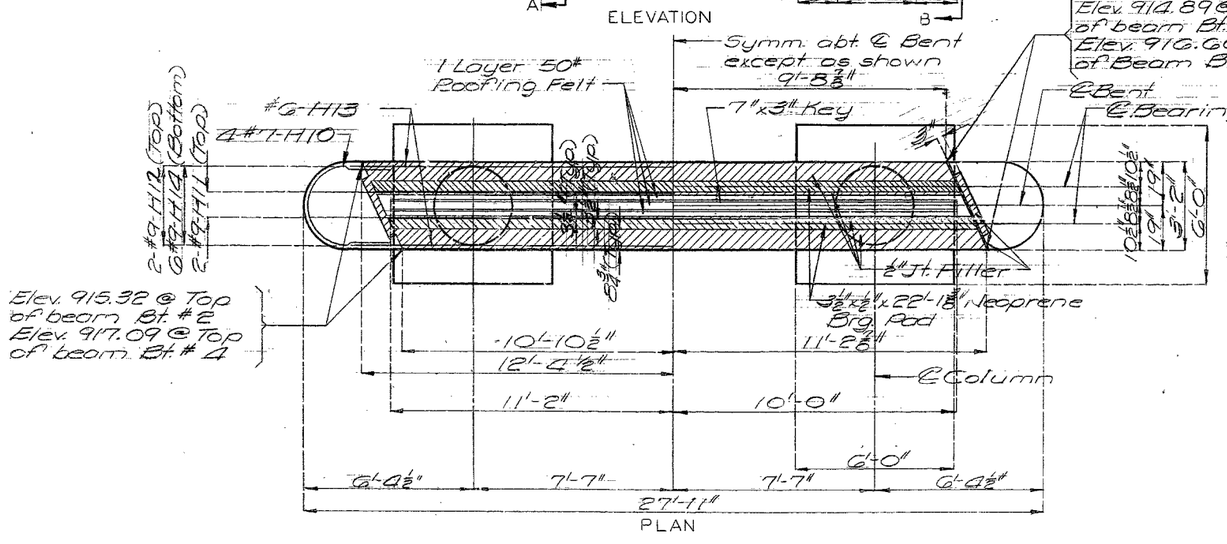

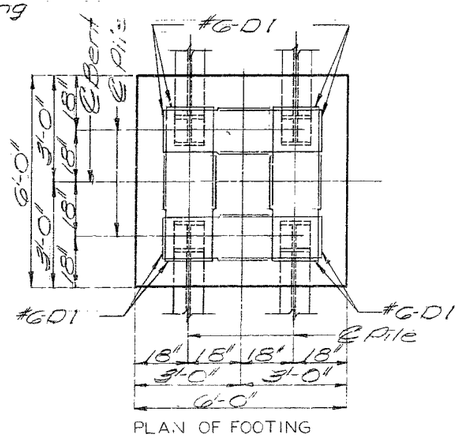

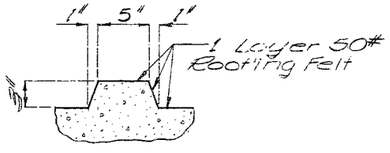

Note: For detail of Steel Pile Splice see Sht. No. 4.

4-18

DETAILED MAY 1979
CHECKED July 1979

Note: This drawing is not to scale. Follow dimensions.

DETAILS OF INT. BENT NO. 2 & 4

Sheet No. 5 of 21.

JACKSON COUNTY

A-1643R

MISSOURI STATE HIGHWAY DEPARTMENT

FED. ROAD DIST. NO.	STATE	FED. AID PROJ. NO.	FISCAL YEAR	SHEET NO.	TOTAL SHEETS
5	MO.		19	36	

419

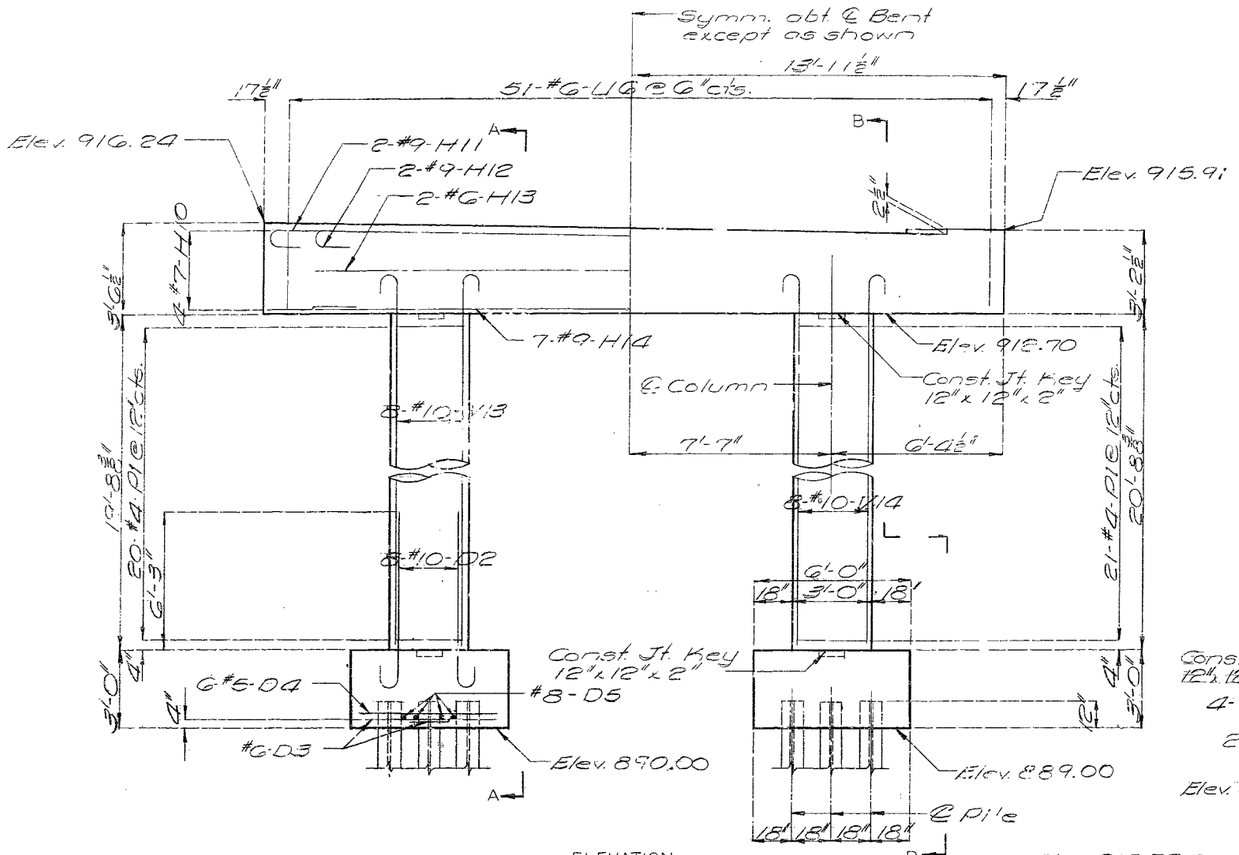

Note: For Detail of Steel Pile Splice see Sht. No. 4. For Detail of Key see Sht. No. 5.

DETAILED MAY 1979
CHECKED JULY 1979

Note: This drawing is not to scale. Follow dimensions.

DETAILS OF INT. BENT NO. 3

Sheet No. 6 of 21.

JACKSON COUNTY

A-16433R

MISSOURI STATE HIGHWAY DEPARTMENT

FED. ROAD DIST. NO.	STATE	FED. AID PROJ. NO.	FISCAL YEAR	SHEET NO.	TOTAL SHEETS
5	MO.		19	37	

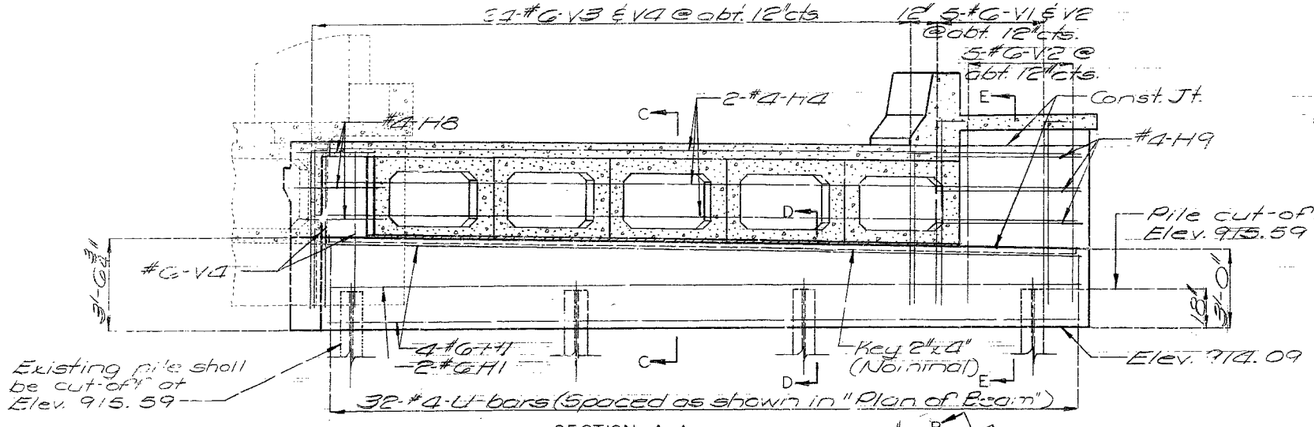

SECTION A-A

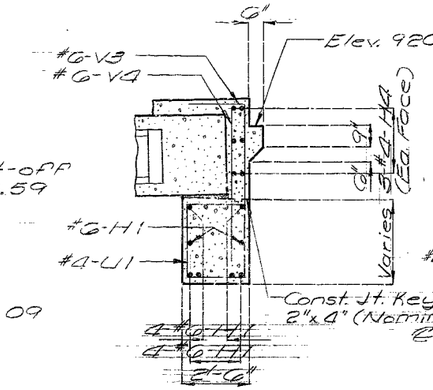

SECTION C-C

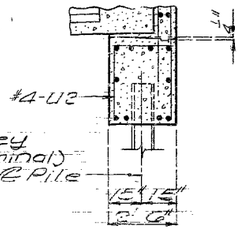

SECTION D-D

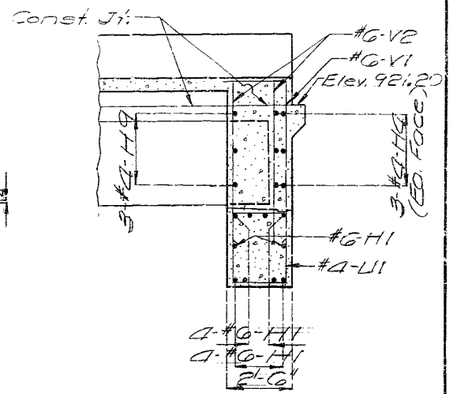

SECTION E-E

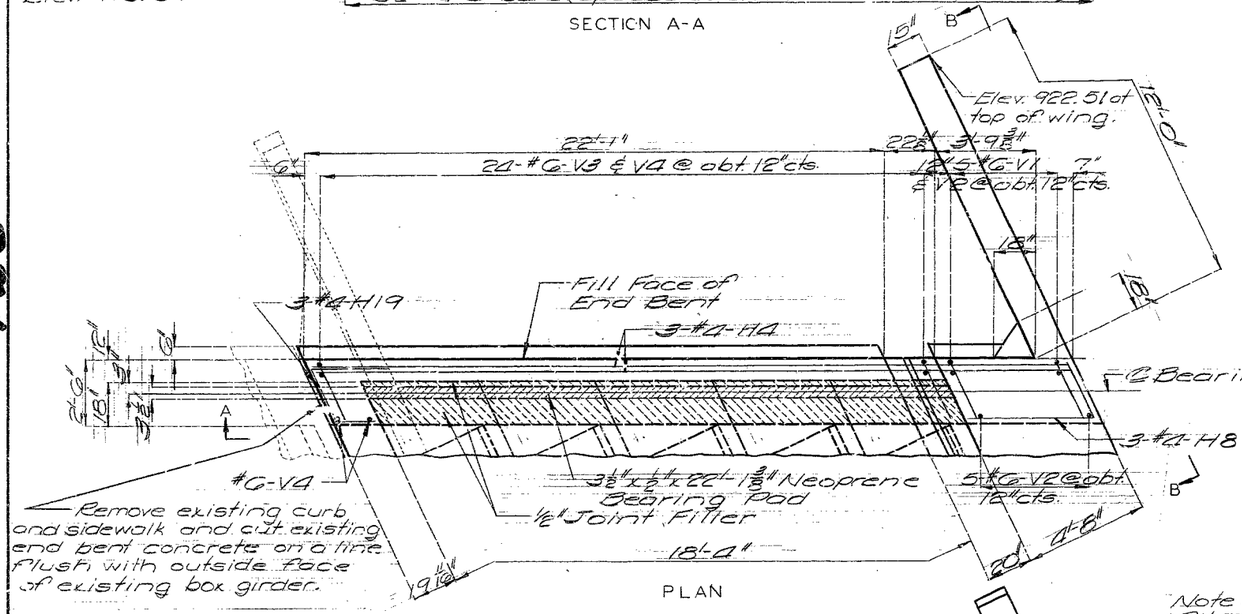

PLAN

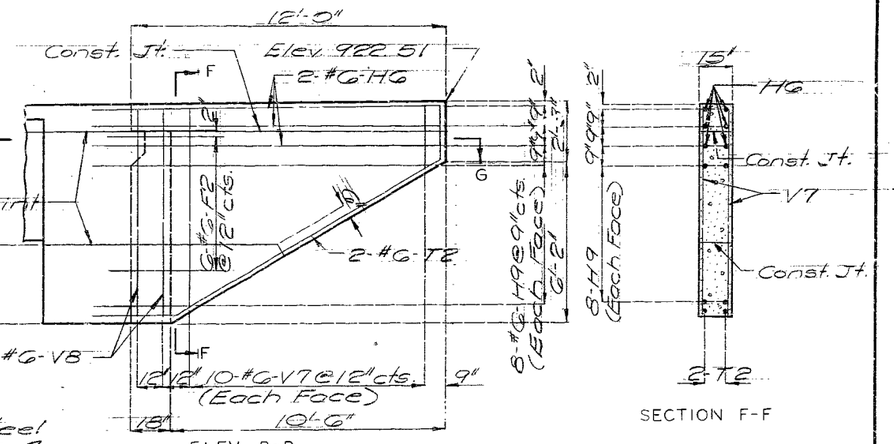

ELEV. B-B

SECTION F-F

Note: For Detail of Steel Pile Splice see Sht. No. 4.

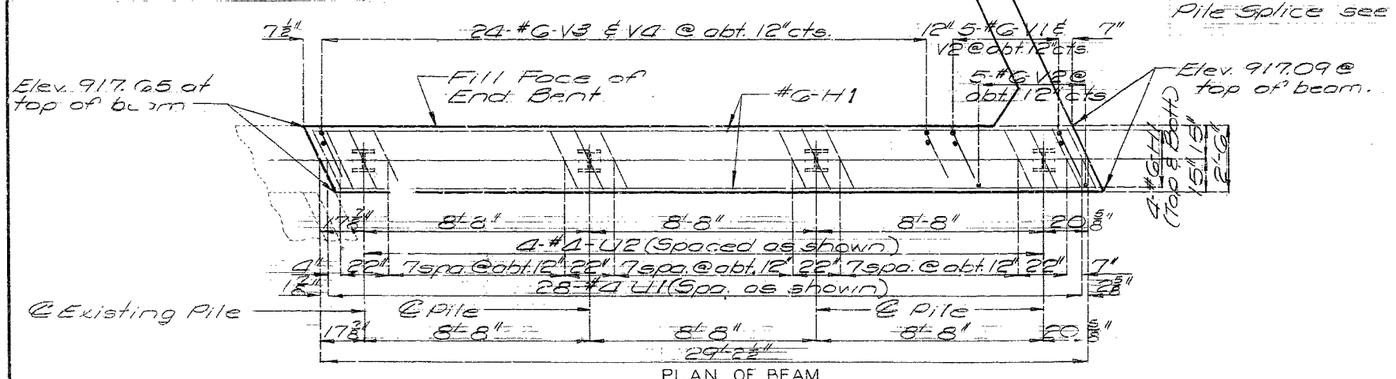

PLAN OF BEAM

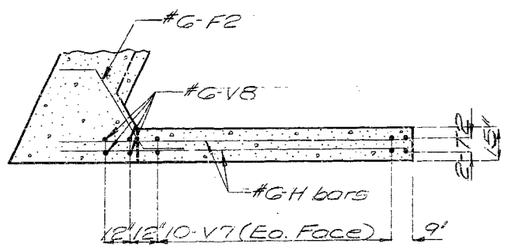

SECTION G-G

DETAILED June 1979
CHECKED July 1979

Note: This drawing is not to scale. Follow dimensions.

DETAILS OF END BENT NO. 5

Sheet No. 7 of 21.

JACKSON COUNTY

A-1643R

420

MISSOURI STATE HIGHWAY DEPARTMENT

FED. ROAD DIST. NO.	STATE	FED. AID PROJ. NO.	FISCAL YEAR	SHEET NO.	TOTAL SHEETS
5	MO.		19	38	

Note: Minimum clearance to reinforcing steel shall be 1½" unless shown otherwise.

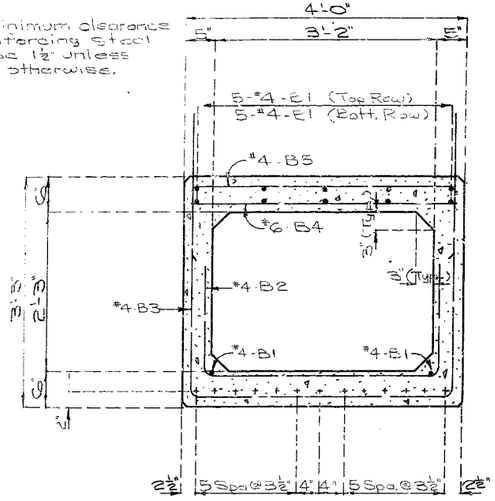

TYPICAL SECTION THRU BOX GIRDER

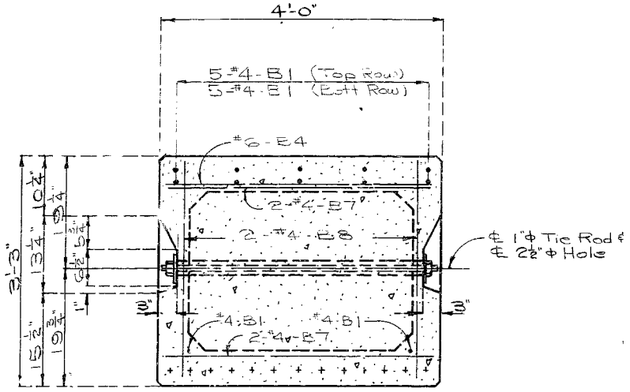

SECTION AT INT. DIAPH.

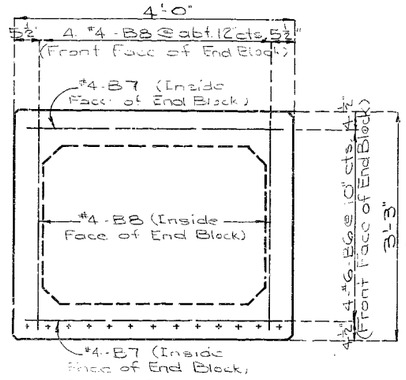

END ELEVATION

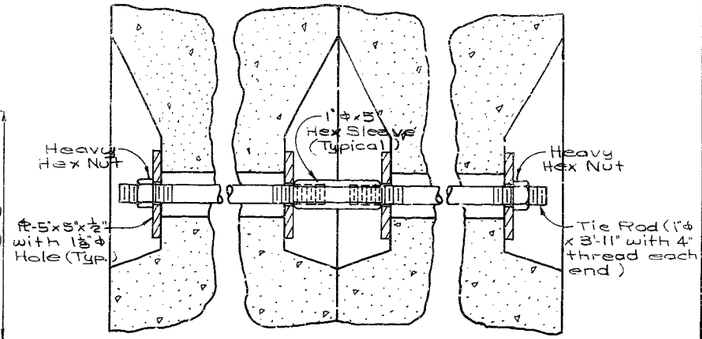

EXTERIOR GIRDER INTERIOR GIRDER

PART SECTION NEAR 1" ϕ TIE ROD

Note: Cost of furnishing 1"ϕ Tie Rod Assemblies is included in price bid for other items.

1" ϕ Tie Rods, sleeves, plates and nuts shall be galvanized.

1" ϕ Tie Rods, sleeves and nuts shall be A-307.

Plates 5"x 5"x ½" shall be A-36.

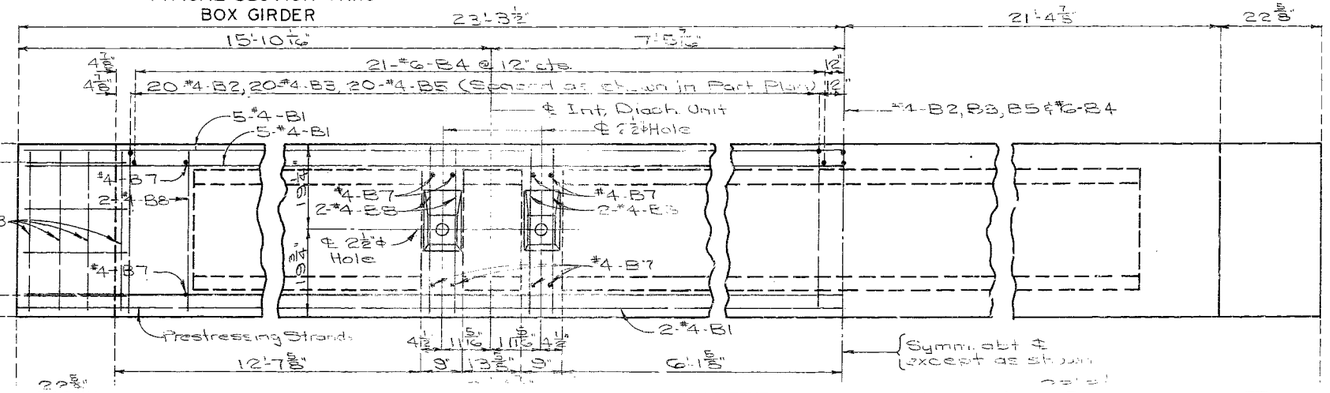

PART ELEVATION

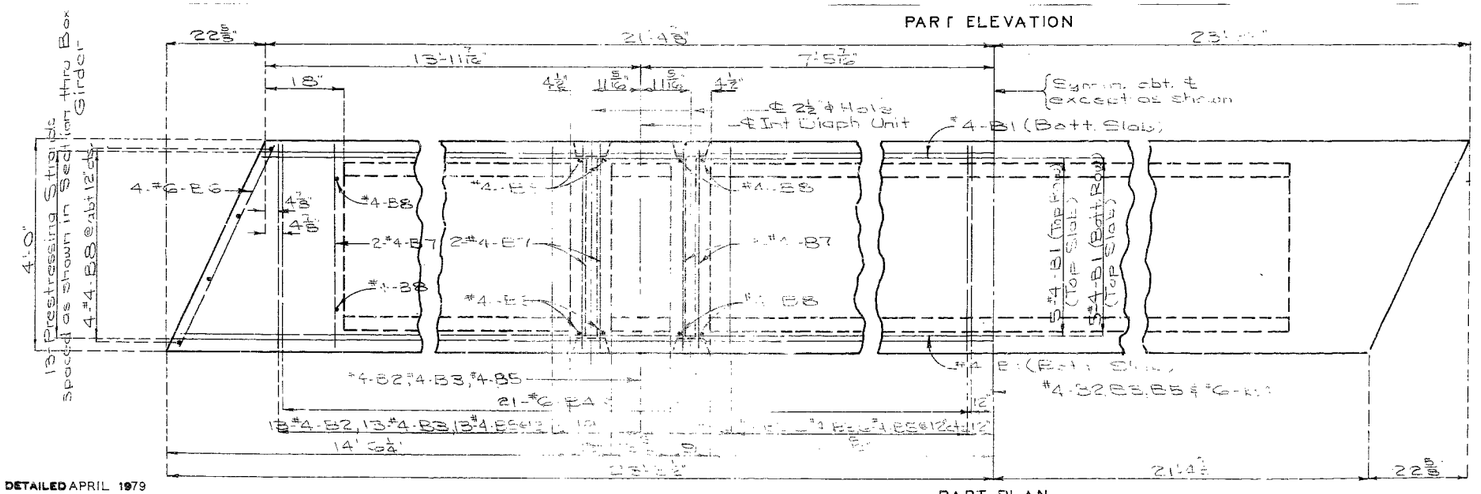

PART PLAN

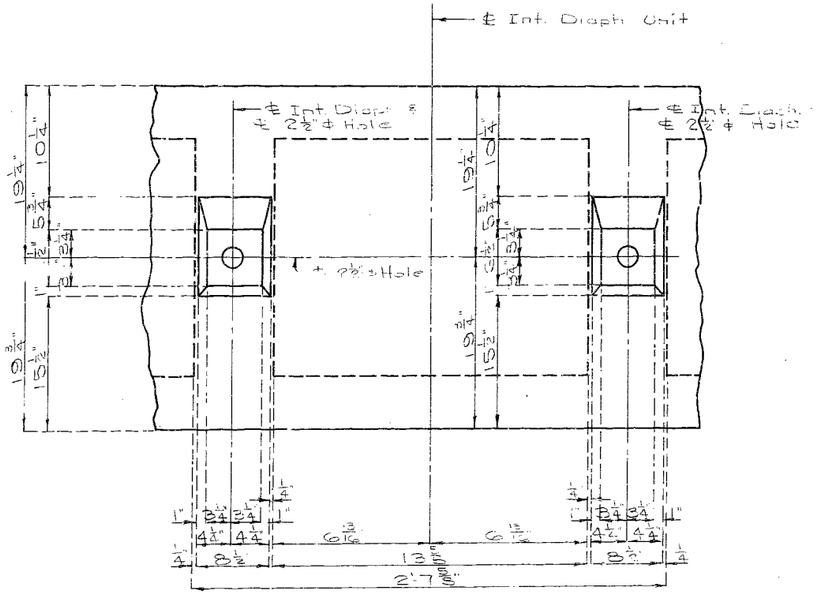

PART ELEVATION OF INT. DIAPH. UNITS

DETAILS OF BOX GIRDER

SPAN (1 -) & (5 - 4)

DETAILED APRIL 1979

CHECKED Aug. 1979

Note: This drawing is not to scale. Follow dimensions.

Sheet No. 5 of 5

JACKSON COUNTY

A-1643R

MISSOURI STATE HIGHWAY DEPARTMENT

FED. ROAD DIST. NO.	STATE	FED. AID PROJ. NO.	FISCAL YEAR	SHEET NO.	TOTAL SHEETS
5	MO.		19	39	

Note: Minimum clearance to reinforcing steel shall be 1½" unless otherwise shown.

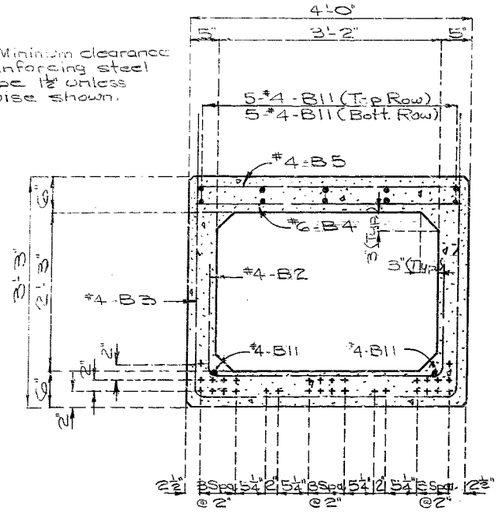

TYPICAL SECTION THRU BOX GIRDER

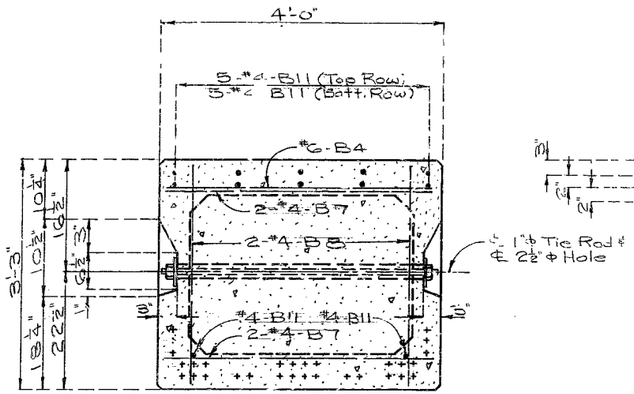

SECTION AT INT. DIAPH.

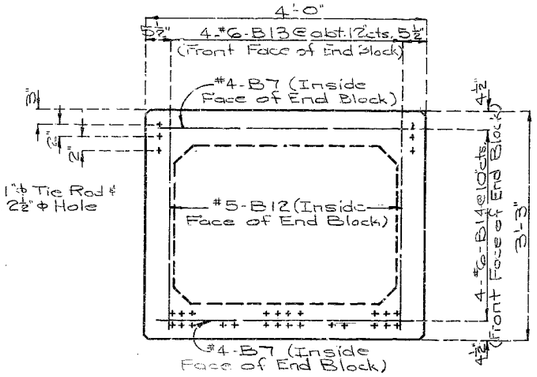

END ELEVATION

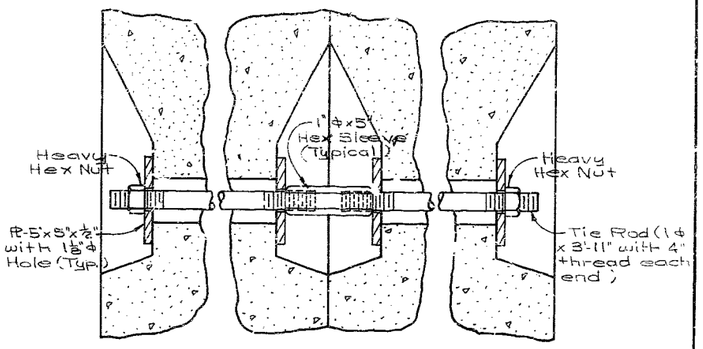

EXTERIOR GIRDER INTERIOR GIRDER

PART SECTION NEAR 1" ϕ TIE ROD

Note: Cost of furnishing 1" ϕ Tie Rod Assemblies is included in price bid for other items.

1" ϕ Tie Rods, sleeves, plates and nuts shall be galvanized.

1" ϕ Tie Rods, sleeves and nuts shall be A-307.

Plates 5"x5"x½" shall be A-36.

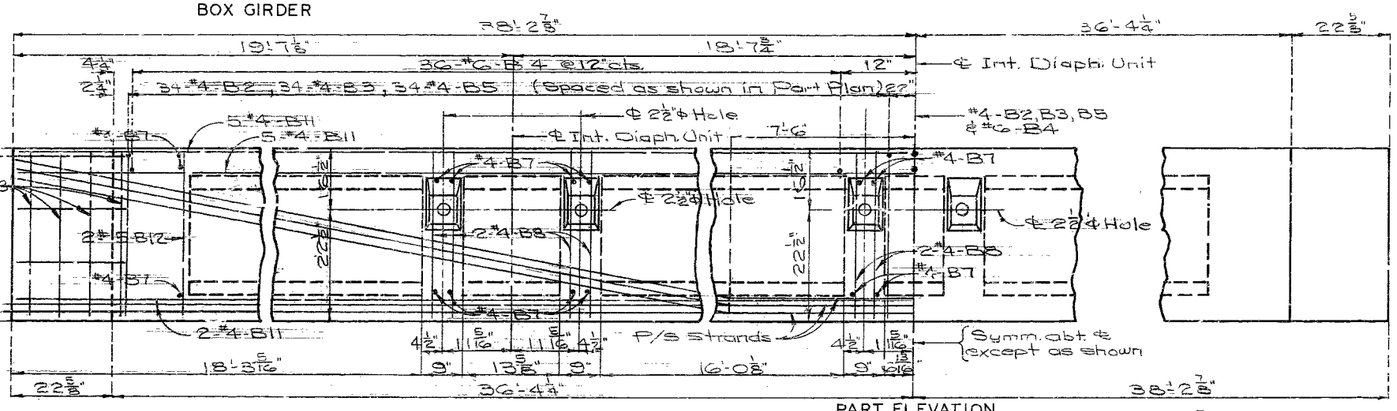

PART ELEVATION

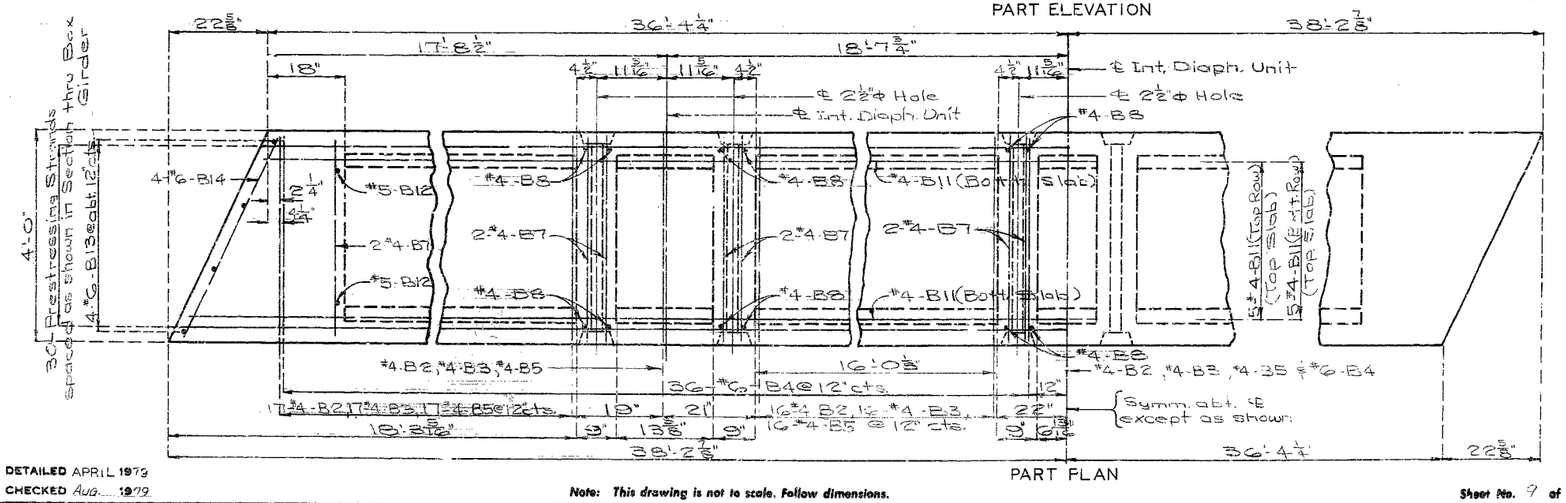

PART PLAN

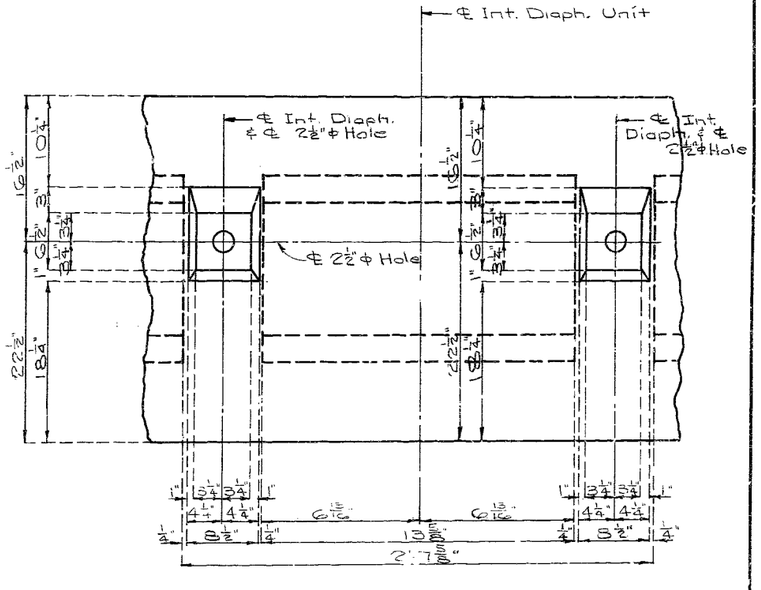

PART ELEVATION OF INT. DIAPH. UNITS

DETAILS OF BOX GIRDER

SPAN (2-3) & (4-3)

DETAILED APRIL 1979

CHECKED AUG. 1979

Note: This drawing is not to scale. Follow dimensions.

Sheet No. 9 of 21.

JACKSON COUNTY

A-1643P

MISSOURI STATE HIGHWAY DEPARTMENT

FED. ROAD DIST. NO.	STATE	FED. AID PROJ. NO.	FISCAL YEAR	SHEET NO.	TOTAL SHEETS
-	MO		19	40	

COMPLETE BILL OF REINFORCING STEEL-EACH BOX GIRDER

NO. REQ'D.	MARK NO. SIZE	MARK NO. MARK	LOCATION	GRADE 60 (H)	SHAPE NO.	STIRRUP (S)	SUBSTR. (X)	VARIES (V)	NO. EACH	DIMENSIONS B FT. IN.	C FT. IN.	D FT. IN.	E FT. IN.	F FT. IN.	H FT. IN.	K FT. IN.	NOMINAL LENGTH FT. IN.	ACTUAL LENGTH FT. IN.	WEIGHT LBS.
			SPAN (1-2)(5-4)																
24	1B1		Box Girder	H	20					23 1.000							23 1	23 1	370
41	4B2		Box Girder	H	10	S					2.500	3 6.000					7 3	7 1	194
41	4B3		Box Girder	H	10	S					4 2.000	3 9.000					12 1	11 11	326
43	6B4		Box Girder	H	20					3 9.000							3 9	3 9	242
41	4B5		Box Girder	H	10	S					20.000	3 9.000					7 1	6 11	183
8	6B6		Box Girder	H	20					4 2.000							4 2	4 2	50
20	4B7		Box Girder	H	20					3 9.000							3 9	3 9	51
28	4B8		Box Girder	H	20					3 0.000							3 0	3 0	56

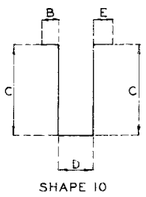

SHAPE 10

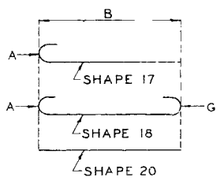

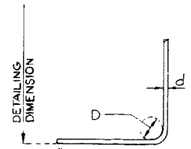

90° STIRRUP BEND

NOTE: ALL STANDARD HOOKS AND BENDS OTHER THAN 180 DEG. TO BE BENT WITH SAME PROCEDURE AS FOR 90 DEG. STANDARD HOOKS.
HOOKS AND BENDS SHALL BE IN ACCORDANCE WITH THE PROCEDURES AS SHOWN ON THIS SHEET.
NOMINAL LENGTHS ARE BASED ON OUT TO OUT DIMENSIONS SHOWN IN BENDING DIAGRAMS AND ARE LISTED FOR FABRICATORS USE.

S-STIRRUP

COMPLETE BILL OF REINFORCING STEEL-EACH BOX GIRDER

NO. REQ'D.	MARK NO. SIZE	MARK NO. MARK	LOCATION	GRADE 60 (H)	SHAPE NO.	STIRRUP (S)	SUBSTR. (X)	VARIES (V)	NO. EACH	DIMENSIONS B FT. IN.	C FT. IN.	D FT. IN.	E FT. IN.	F FT. IN.	H FT. IN.	K FT. IN.	NOMINAL LENGTH FT. IN.	ACTUAL LENGTH FT. IN.	WEIGHT LBS.
			SPAN (2-3)(4-3)																
69	4B2		Box Girder	H	10	S					22.500	3 6.000					7 3	7 1	326
69	4B3		Box Girder	H	10	S					4 2.000	3 9.000					12 1	11 11	549
73	6B4		Box Girder	H	20					3 9.000							3 9	3 9	411
69	4B5		Box Girder	H	10	S					20.000	3 9.000					7 1	6 11	319
28	4B7		Box Girder	H	20					3 9.000							3 9	3 9	70
24	4B8		Box Girder	H	20					3 0.000							3 0	3 0	48
24	4B11		Box Girder	H	20					38 0.000							38 0	38 0	609
4	5B12		Box Girder	H	20					3 0.000							3 0	3 0	13
8	6B13		Box Girder	H	20					3 0.000							3 0	3 0	36
8	6B14		Box Girder	H	20					4 2.000							4 2	4 2	50

425

GENERAL NOTES-PRESTRESSED BOX GIRDERS

DESIGN UNIT STRESSES:
NON-PRESTRESSED REINFORCING STEEL fs - 24,000 psi
CONCRETE FOR PRESTRESSED GIRDERS
ULTIMATE COMPRESSIVE STRESS 5,000 p.s.i (A-11)
MINIMUM COMPRESSIVE STRENGTH AT TRANSFER 4,000 p.s.i.

PRESTRESSING TENDONS SHALL BE HIGH STRENGTH UNCOATED SEVEN-WIRE STRESS RELIEVED STRANDS FOR PRESTRESSED CONCRETE CONFORMING TO A.S.T.M. A-416 EXCEPT THAT NOMINAL DIAMETER OF STRANDS = ½" AND NOMINAL AREA = 0.153 SQ. IN. AND MINIMUM ULTIMATE STRENGTH = 41,300 lbs. (270 ksi)

THE METHOD AND SEQUENCE OF RELEASING STRANDS SHALL BE SHOWN ON THE SHOP DRAWINGS

(+) INDICATES PRESTRESSED STRANDS

USE 13 STRANDS. INITIAL PRESTRESS FORCE = 376 Kips (45% Scan)
USE 30 STRANDS. INITIAL PRESTRESS FORCE = 867 Kips (75% Scan)
TWO ½ø WEEP HOLES SHALL BE PROVIDED AT LOWER END OF EACH VOID. THEY SHALL EXTEND THRU FORMS AND BE KEPT OPEN AT ALL TIMES

MISSOURI STATE HIGHWAY DEPARTMENT

FED. ROAD DIST. NO.	STATE	FED. AID PROJ. NO.	FISCAL YEAR	SHEET NO.	TOTAL SHEETS
5	MO.		13	41	

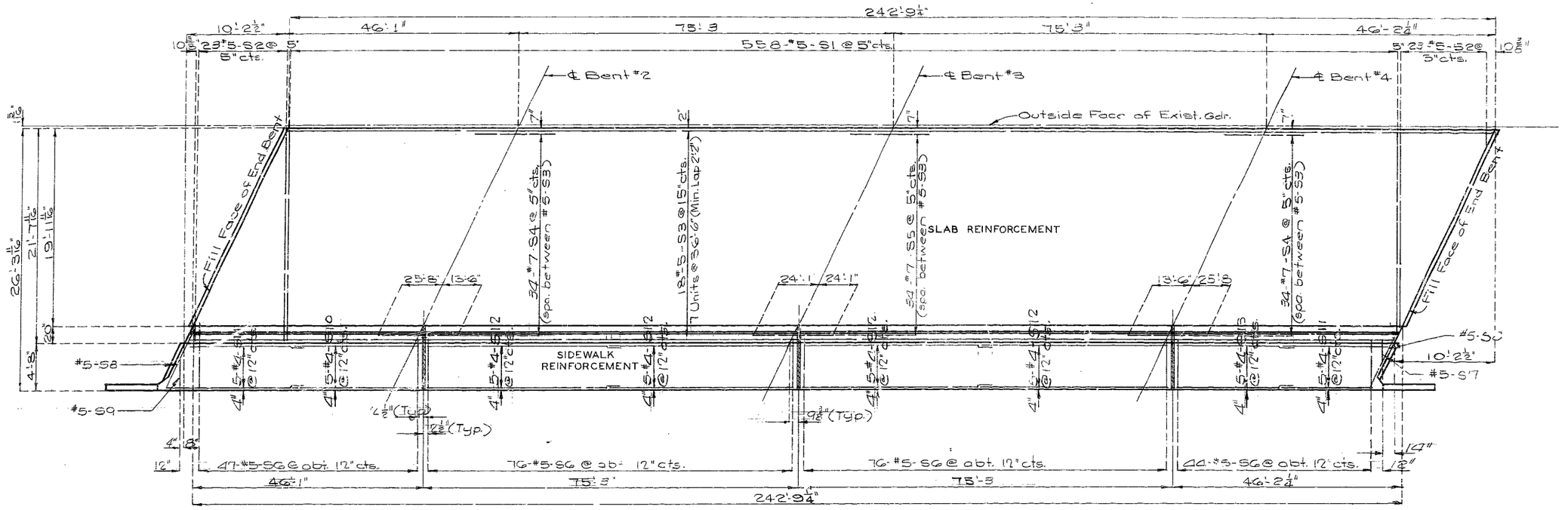

PLAN OF SLAB & SIDEWALK SHOWING REINFORCEMENT

Note: Longitudinal dimensions shown are taken parallel to grade at top of slab.

Note: Slab to be built parallel to grade and to a minimum thickness of 7". Slab haunches to be adjusted for any difference in girder camber from that shown in camber diagram. Concrete in slab haunches is included in the Estimated Quantities as Class B2 concrete. The slab shall be poured at a rate of not less than 25 cu yds. per hour.

Span	L/4	L/2	3L/4	L
Span (1-2)	.10	.16	.14	.07
Span (2-3)	.08	.13	.11	.06
Span (3-4)	.08	.13	.11	.06
Span (4-5)	.09	.14	.12	.07

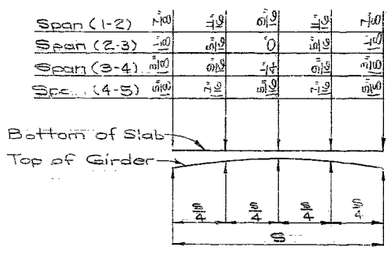

THEORETICAL SLAB HAUNCHING DIAGRAM

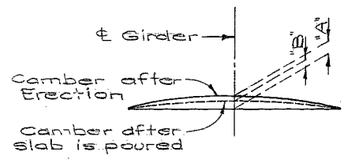

GIRDER CAMBER DIAGRAM

Span	"A"	"B"
(1-2)	3/8"	5/16"
(2-3)	1 7/16"	1 5/8"
(3-4)	1 7/16"	1 5/8"
(4-5)	3/8"	5/16"

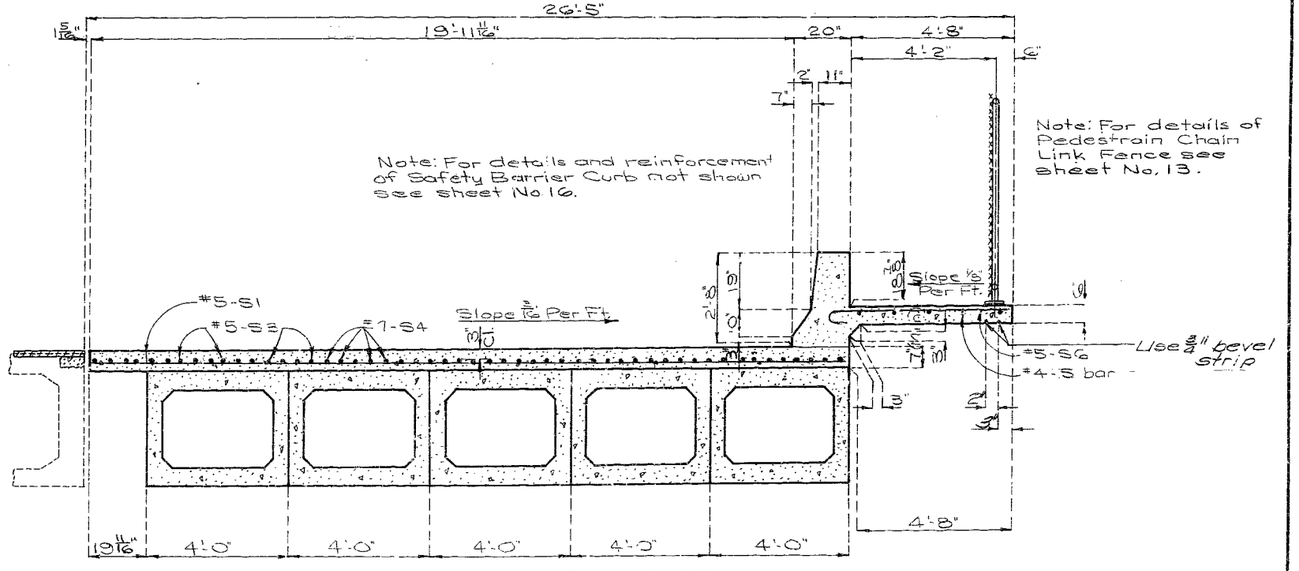

SECTION THRU WIDENING NEAR INT. BENT

DETAILED MAY 1979
CHECKED AUG. 1979

Note: This drawing is not to scale. Follow dimensions.

Sheet No. 11 of 21.

JACKSON COUNTY

A-1643R

MISSOURI STATE HIGHWAY DEPARTMENT

FED. ROAD DIST. NO.	STATE	FED. AID PROJ. NO.	FISCAL YEAR	SHEET NO.	TOTAL SHEETS
5	MO.		19	42	

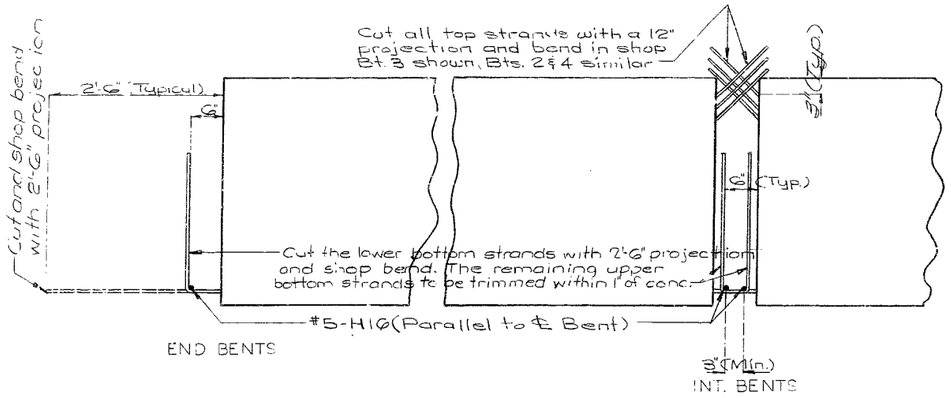

STRAND DETAILS AT GIRDER ENDS

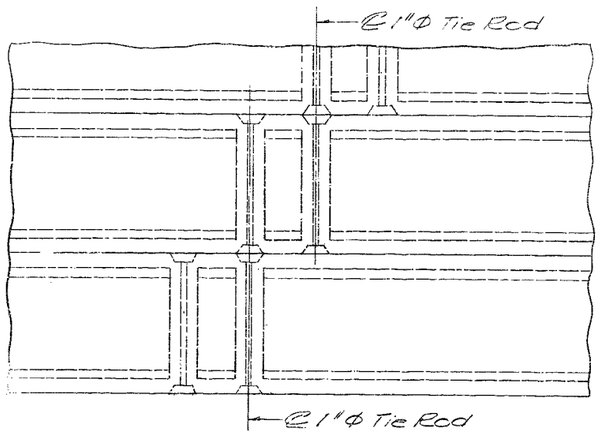

PART PLAN OF INT. DIAPH
SHOWING TIE ROD LOCATION

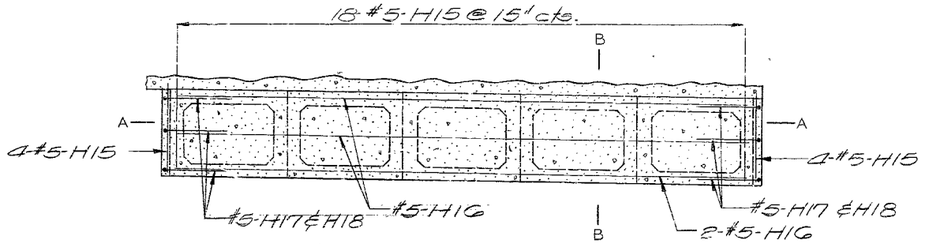

SECTION THRU DIAPH. AT INT. BENTS

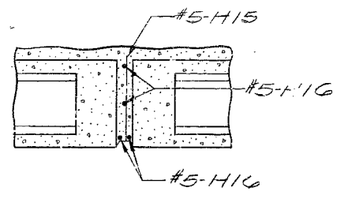

SECTION B-B

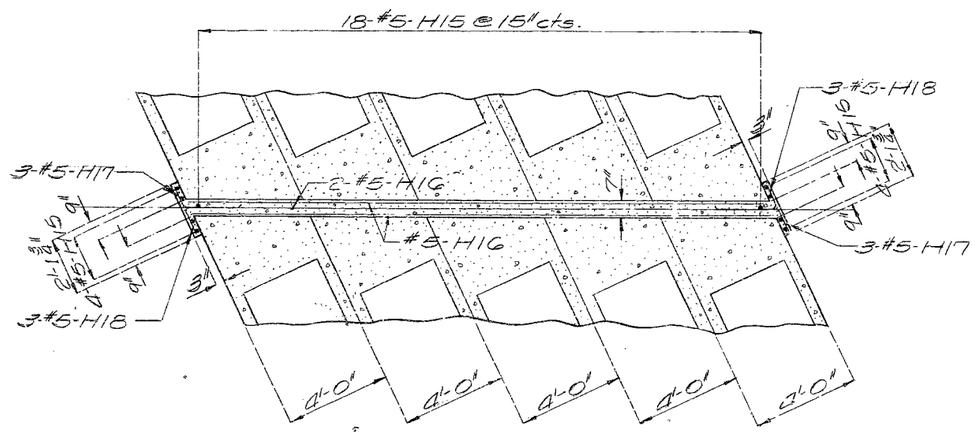

SECTION A-A

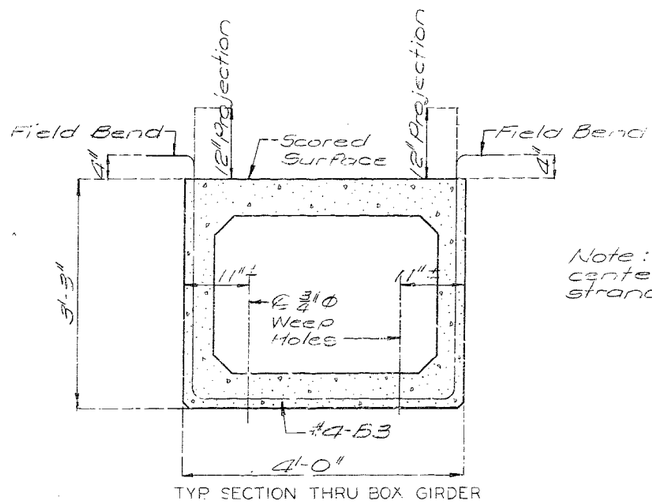

TYP. SECTION THRU BOX GIRDER

Note: ¾"Ø Weep Holes to be centered between prestressed strands.

DETAILED Aug. 1979
CHECKED Aug. 1979

Note: This drawing is not to scale. Follow dimensions.

Sheet No. 12 of 21.

JACKSON COUNTY

A-1643R

MISSOURI STATE HIGHWAY DEPARTMENT

FED. ROAD DIST. NO.	STATE	FED. AID PROJ. NO.	FISCAL YEAR	SHEET NO.	TOTAL SHEETS
5	MO.		19	43	

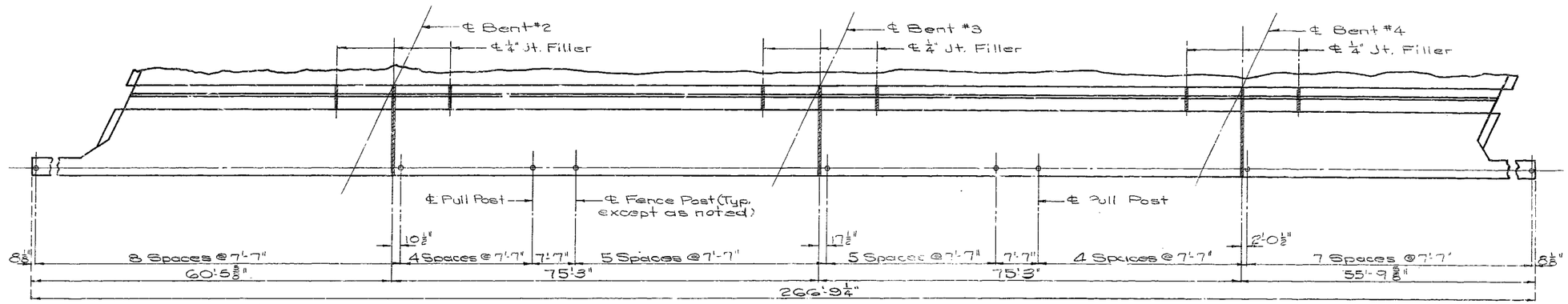

PLAN OF SIDEWALK SHOWING FENCE POST SPACING

Note: Longitudinal dimensions shown are taken parallel to grade at top of sidewalk and along ℄ 2" ϕ Pipe.

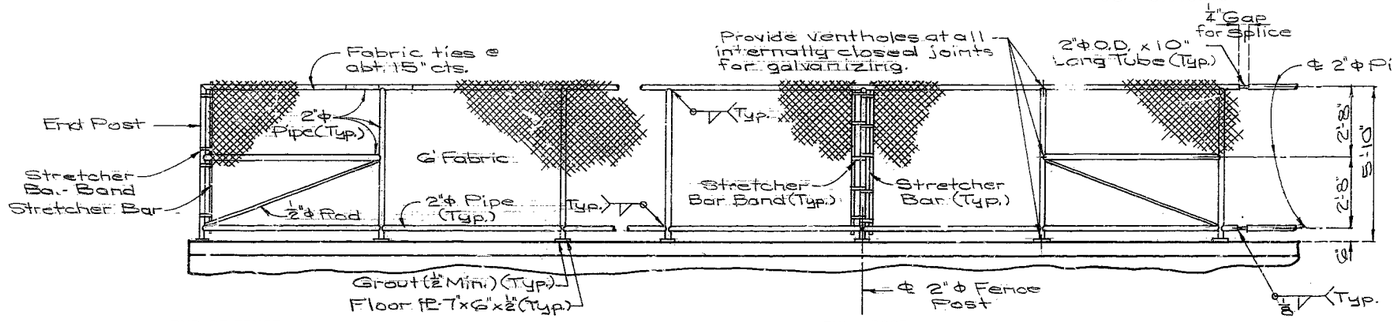

PART ELEVATION OF PEDESTRAIN CHAIN LINK FENCE

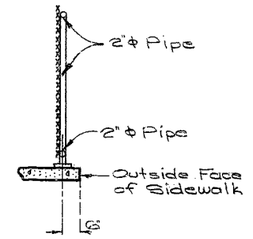

SECTION THRU FENCE

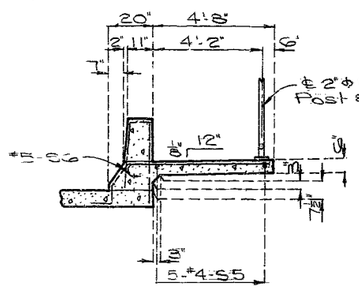

SECTION THRU SIDEWALK

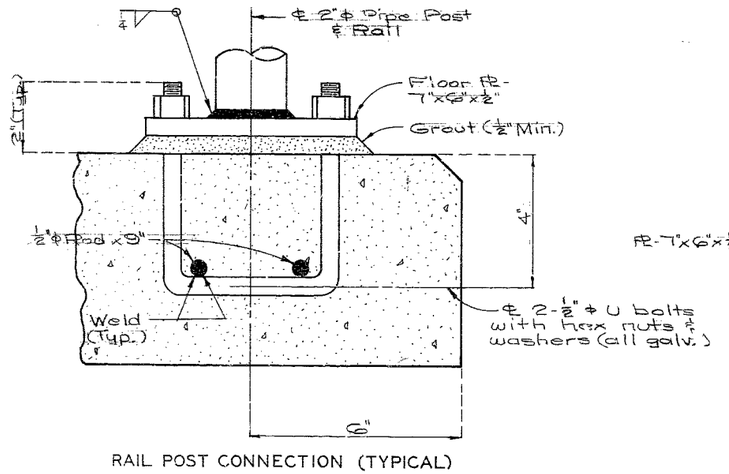

RAIL POST CONNECTION (TYPICAL)

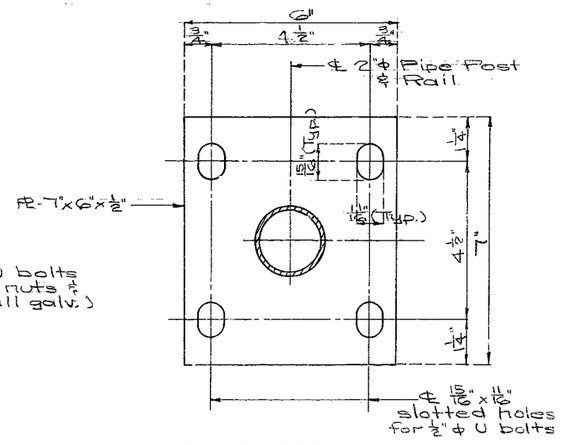

PLAN OF FLOOR PLATE

Note:
Pedestrian guard fence (chain link type) shall be in accordance with Section 1043 of the Std. Spec., except all fabric shall have top and bottom edges knuckled.

All rail posts shall be vertical. Grout of ½" minimum thickness shall be placed under floor plates to provide for vertical alignment of rail posts.

The contract unit price per linear foot for pedestrian guard fence (galvanized) shall include furnishing and erecting the fence complete with anchor bolts and washers.

Measurement of pedestrian guard fence shall be taken parallel to grade through the centerline of posts.

DETAILED MAY 1979
CHECKED JULY 1979

Note: This drawing is not to scale. Follow dimensions.

Sheet No. 13 of 21.

JACKSON COUNTY

A-1643R

MISSOURI STATE HIGHWAY DEPARTMENT

FED. ROAD DIST. NO.	STATE	FED. AID PROJ. NO.	FISCAL YEAR	SHEET NO.	TOTAL SHEETS
7	MO.		19	44	

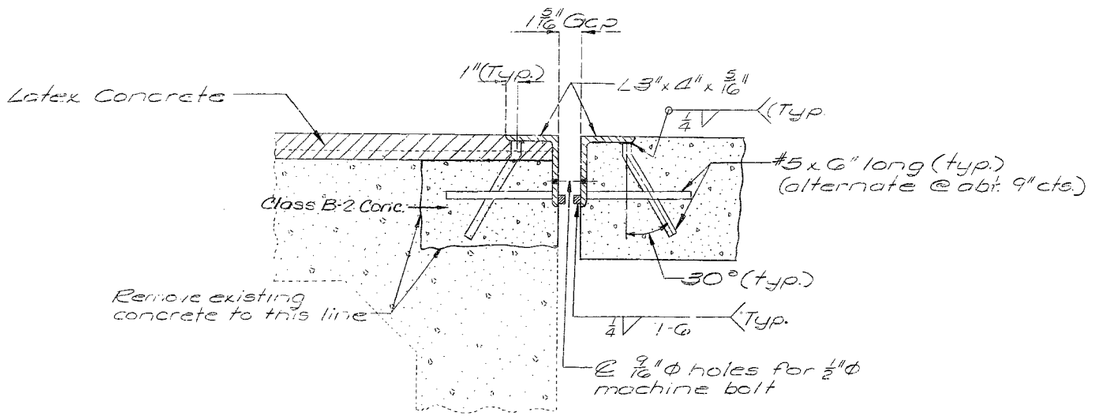

TYP. SECTION THRU LONGITUDINAL JOINT

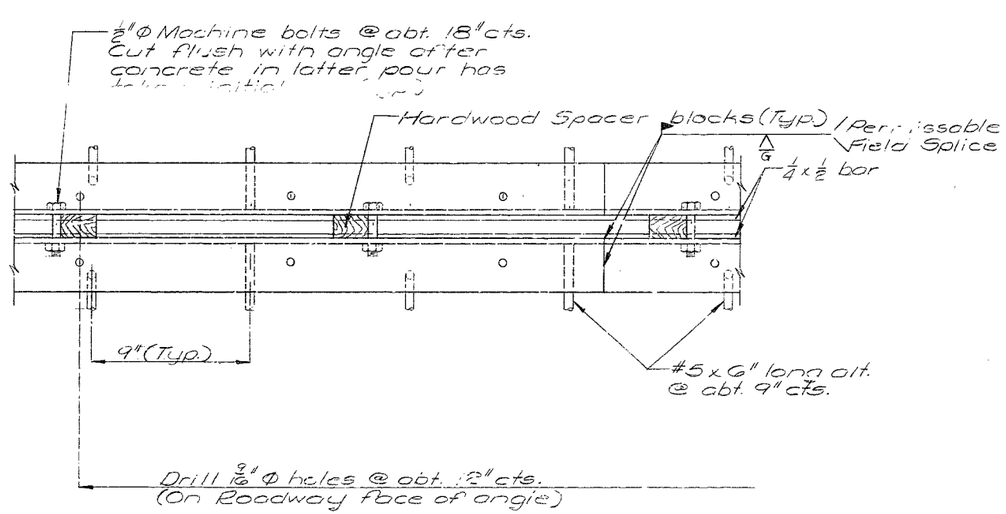

PART PLAN

NOTES FOR PREFORMED COMPRESSION JOINT SEAL:

Structural steel for Expansion Device shall be fabricated in one section except that when the length is over 50 feet, splicing is permissible.

No. 5 bars for expansion device shall be grade 60. Approved stud welded anchors may be used in lieu of #5 bars shown.

See Special Provisions for the requirements of compression joint seal.

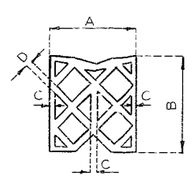

TYPE A1

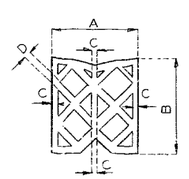

TYPE B3

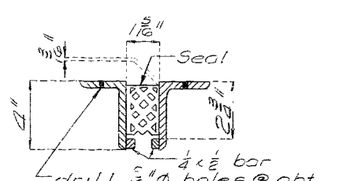

PART CROSS SECTION THRU EXPANSION JOINT

TABLE OF LONGITUDINAL SEALS				
TYPE	GROOVE SIZE AT 60°F.		SEAL SIZE	
	WIDTH	HEIGHT	WIDTH	HEIGHT
A1 OR B3	1-5/16"	2-3/4"	2"	2-1/16"

TABLE OF LONGITUDINAL SEAL TOLERANCES (INCHES)				
TYPE	"A" (WIDTH)	"B" (HEIGHT)	"C" (SHELL)	"D" (WEBS)
A1 OR B3	2.000 +.187 -.000	2.0625 +.125 -.125	0.125 +.030 -.015	0.094 +.030 -.015

DETAILS OF LONGITUDINAL PREFORMED COMPRESSION JOINT SEAL

MISSOURI STATE HIGHWAY DEPARTMENT

FED. ROAD DIST. NO.	STATE	FED. AID PROJ. NO.	FISCAL YEAR	SHEET NO.	TOTAL SHEETS
5	MO.		19	45	

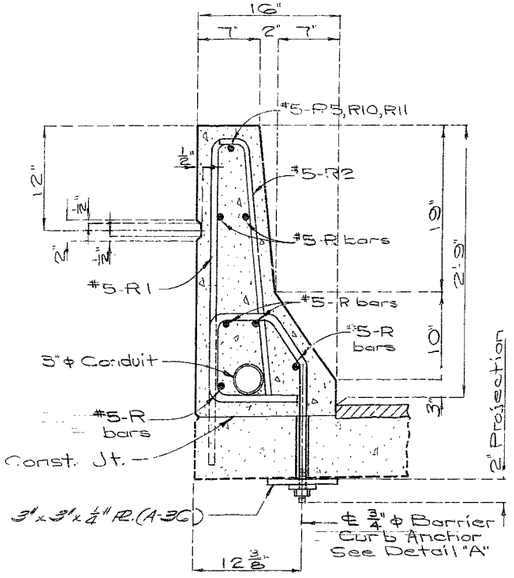

SECTION THRU 16" BARRIER CURB

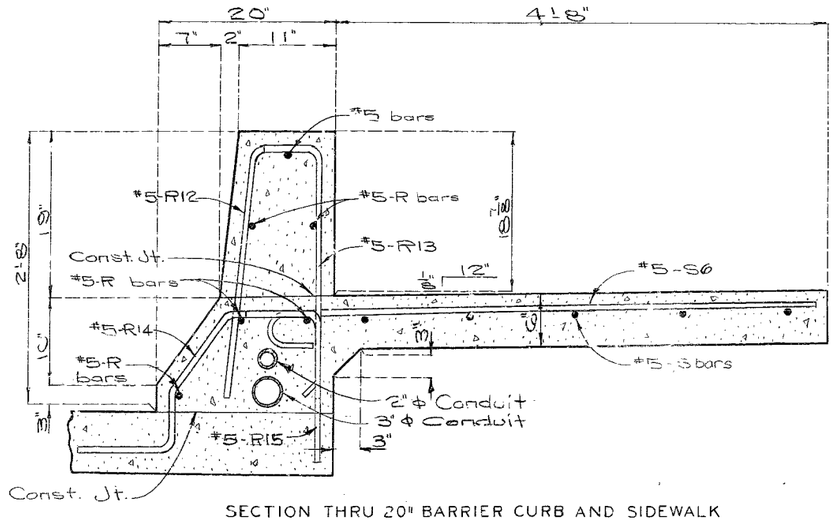

SECTION THRU 20" BARRIER CURB AND SIDEWALK

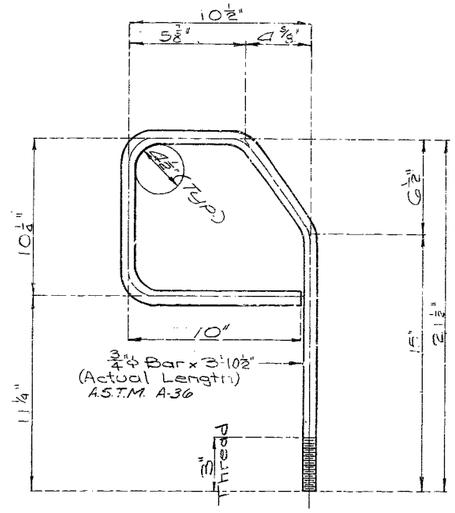

DETAIL "A"
DETAILS OF BARRIER CURB ANCHORS
(237 Required)

Note: Each Barrier Curb Anchor shall be furnished with a 3"x3"x¼" PL. (A-36), one heavy hex nut (A-307) and washer. This entire assembly shall be galvanized in accordance with A.S.T.M. A-123 and A.S.T.M. A-153.

After the concrete in the barrier curb has set, the ¾" PL., washer and nut shall be installed and the nut tightened snug tight and the threads burred.

Cost of furnishing and installing Barrier Curb Anchors shall be included in the price bid for Class B-2 Concrete.

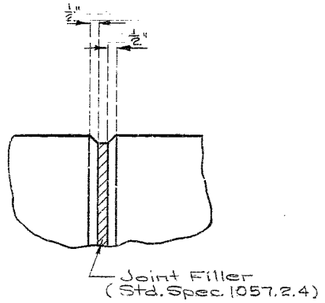

FILLED JOINT DETAIL

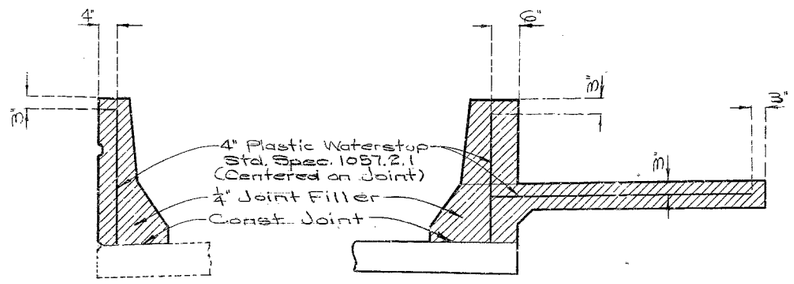

FILLED JOINT
16" BARRIER CURB

FILLED JOINT
20" BARRIER CURB AND SIDEWALK

DETAIL OF PLASTIC WATERSTOP

Note: Plastic waterstop shall be placed in all safety barrier curbs filled joints.

Cost of plastic waterstop complete in place to be included in unit price bid for concrete.

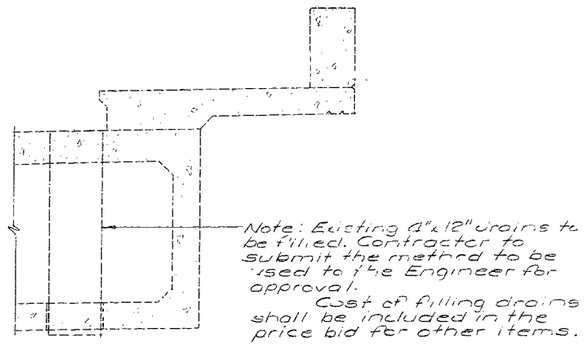

DETAIL OF EXISTING FLOOR DRAINS

Conduit Notes:

Conduit shall be schedule 40-Heavy wall PVC. (Polyvinyl Chloride Plastic or H.D.P. (High Density Polyethylene).

Expansion couplings shall be placed at all barrier curb filled joints and shall provide a movement of 1" in either direction.

Shift reinforcing steel in field where necessary to clear conduit.

Cost of furnishing and installing conduit system shall be included in the contract price bid for "Conduit System on Structure"

MISSOURI STATE HIGHWAY DEPARTMENT

FED. ROAD DIST. NO.	STATE	FED. AID PROJ. NO.	FISCAL YEAR	SHEET NO.	TOTAL SHEETS
5	MO.		19	46	

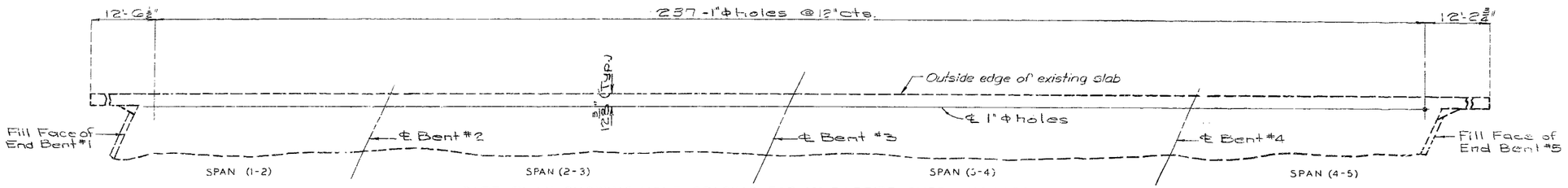

PART PLAN SHOWING HOLE SPACING FOR 16" BARRIER CURB ANCHORS

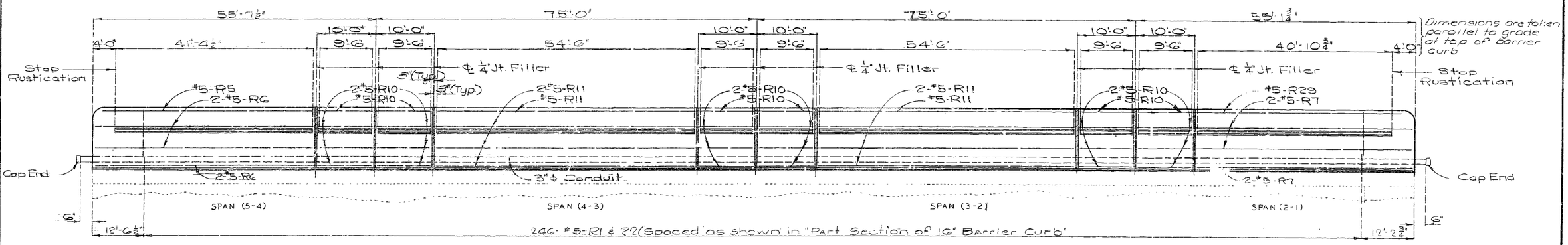

ELEVATION OF 16" BARRIER CURB

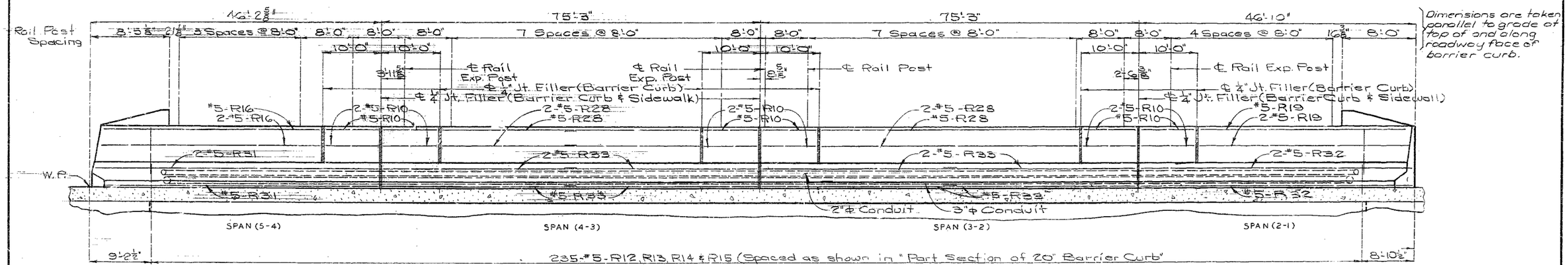

SECTION NEAR 20" BARRIER CURB

Note · See Sheet No. 19 for details of conduit in 20" Barrier Curb near End Bents.
For sections thru Barrier Curbs see Sheet No. 15.

DETAILED JULY 1979
CHECKED Aug. 1979

Note: This drawing is not to scale. Follow dimensions.

Sheet No. 16 of 21.

JACKSON COUNTY

A-1643R

MISSOURI STATE HIGHWAY DEPARTMENT

FED. ROAD DIST. NO.	STATE	FED. AID PROJ. NO.	FISCAL YEAR	SHEET NO.	TOTAL SHEETS
5	MO.		19	47	

Note: 2"ϕ and 3"ϕ conduit is not shown on this sheet for clarity of details.

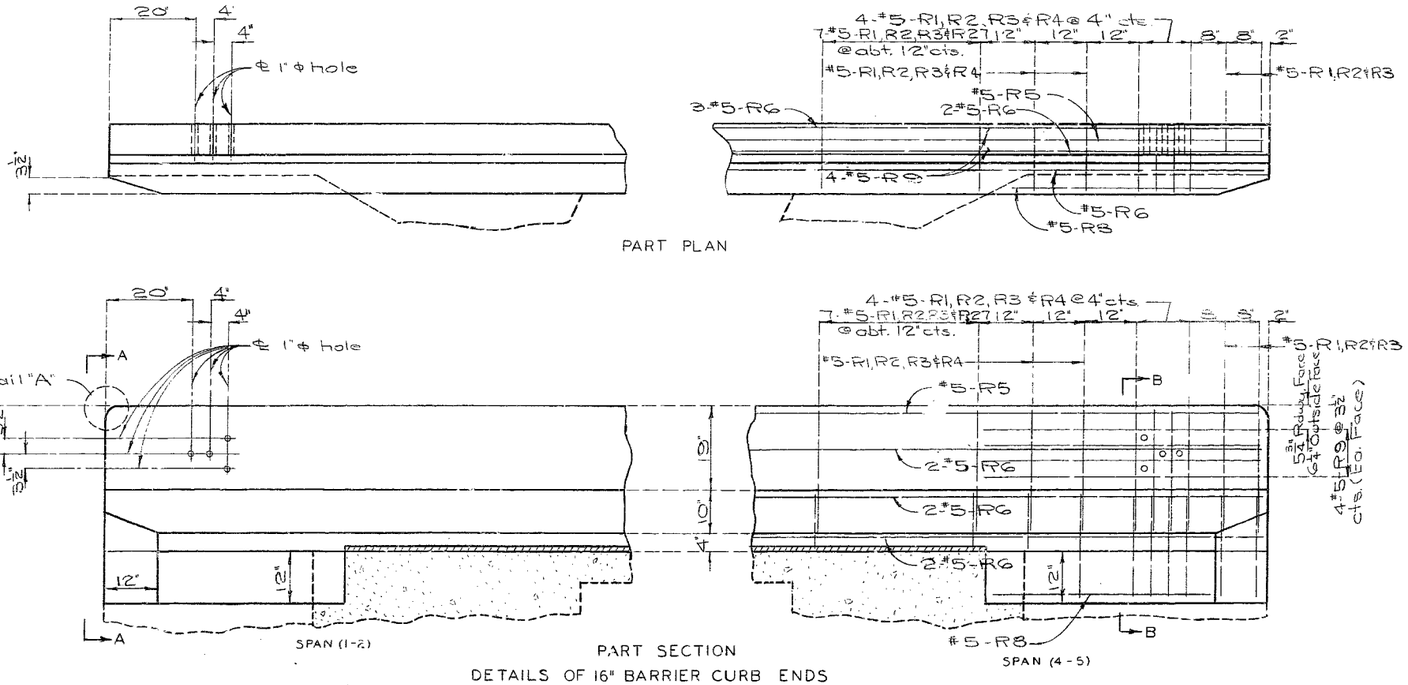

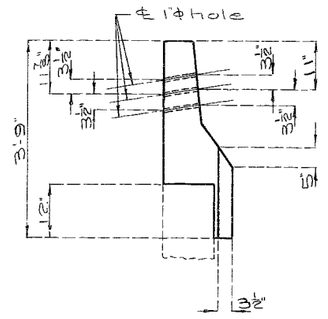

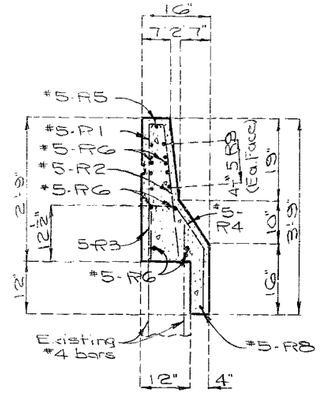

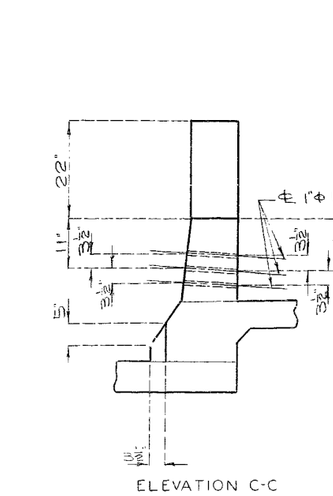

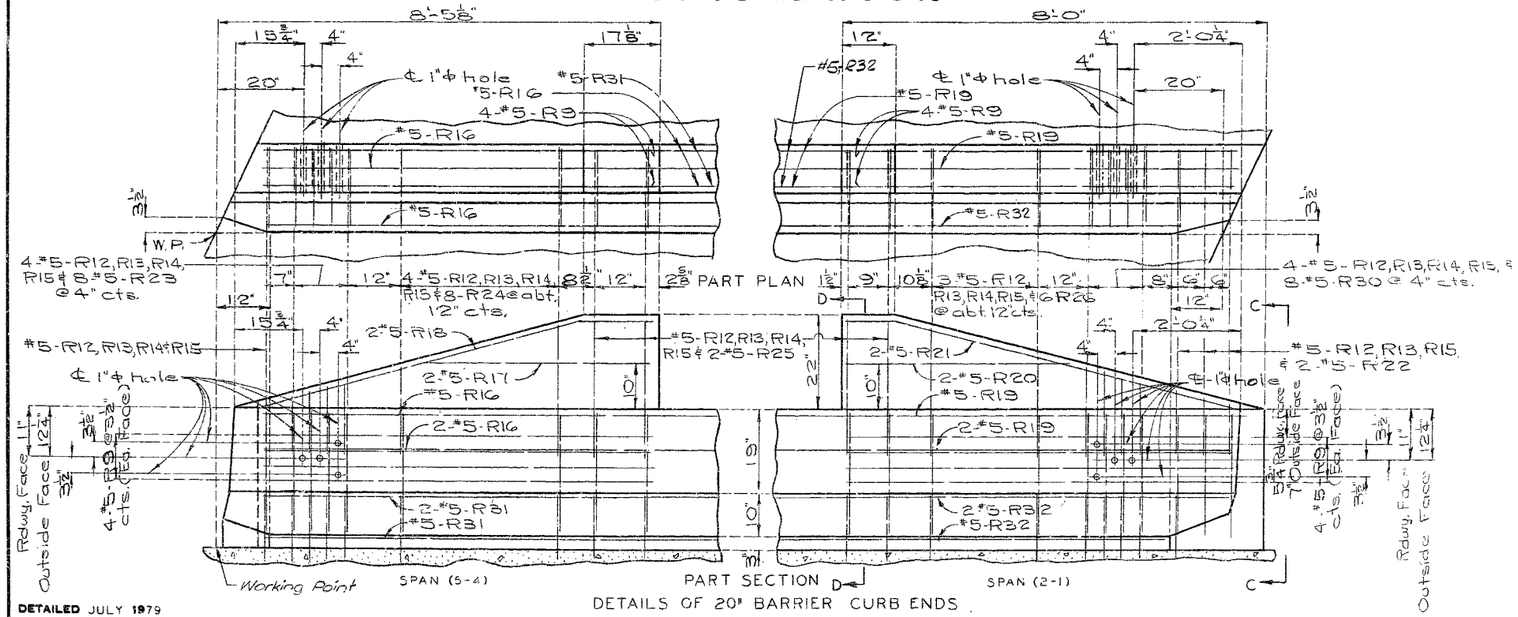

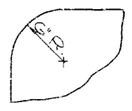

DETAILED JULY 1979
CHECKED Aug. 1979

Note: This drawing is not to scale. Follow dimensions.

Sheet No. 17 of 21.

JACKSON COUNTY

A-1643R

MISSOURI STATE HIGHWAY DEPARTMENT

FED. ROAD DIST. NO.	STATE	FED. AID PROJ. NO.	FISCAL YEAR	SHEET NO.	TOTAL SHEETS
5	MO.		19	48	

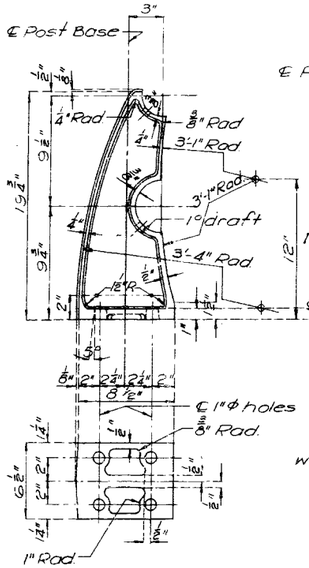

HANDRAIL POST

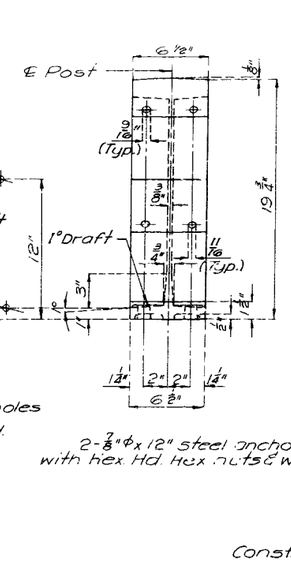

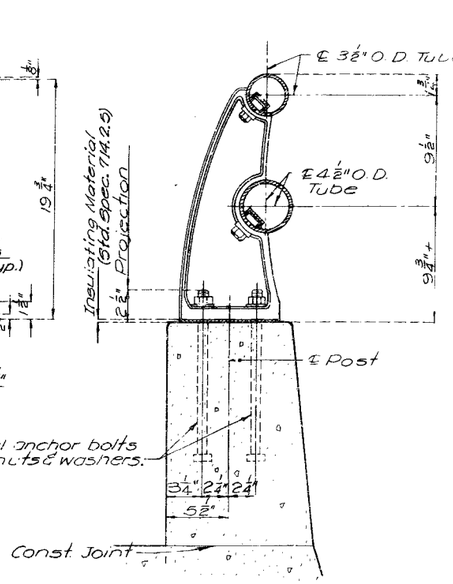

SECTION THRU HANDRAIL

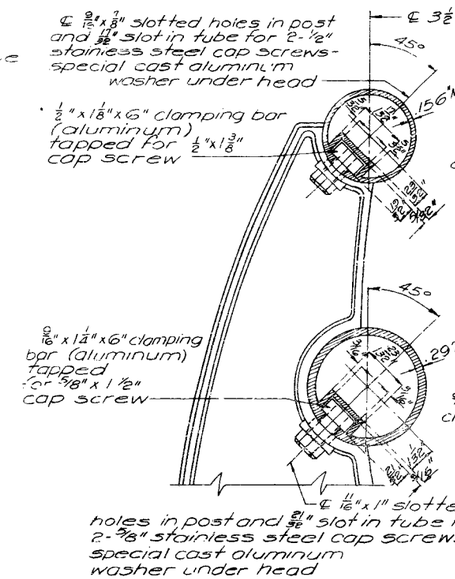

RAIL ATTACHMENT TO POST

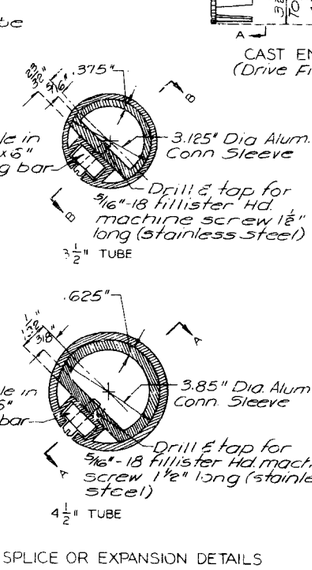

RAIL SPLICE OR EXPANSION DETAILS

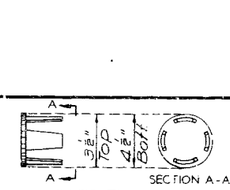

CAST END CAP
(Drive Fit Type)

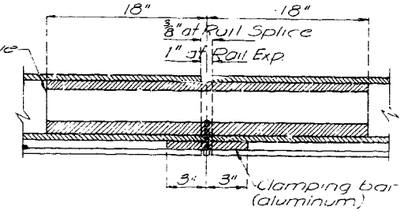

SECTION A-A & B-B

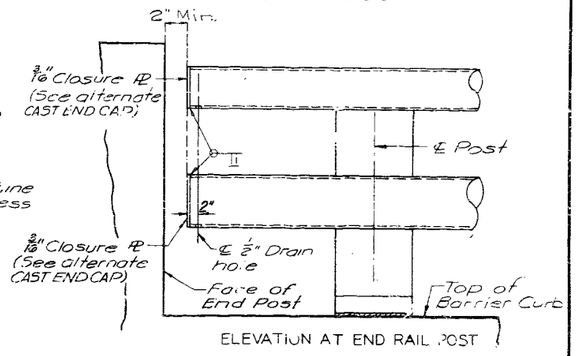

ELEVATION AT END RAIL POST

TWO TUBE ALUMINUM RAIL.

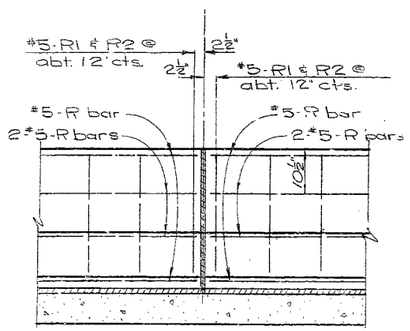

PART SECTION OF
16" BARRIER CURB

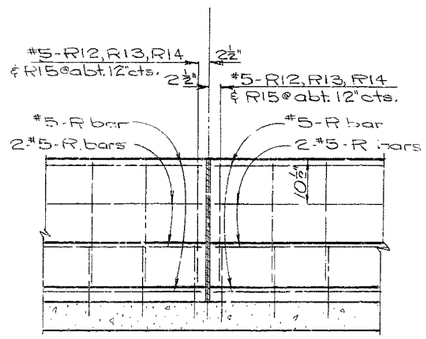

PART SECTION OF
20" BARRIER CURB

Note: See Special Provisions for use of existing two tube aluminum rail.

GENERAL NOTES:

All Bridge Rail Posts shall be set normal to grade.

Aluminum Tube Bridge Rail shall be bent to conform to vertical and horizontal alignment of barrier curb.

Aluminum washer shims between top of barrier curb and post base may be used for adjusting bridge rail alignment. Maximum thickness of shims to be ½". Where more tilting of post is required for proper alignment, concrete bearing areas shall be ground down.

All parts of bridge rail, except anchor bolts, nuts, washers and set screws are to be aluminum material.

Omit set screw in side of rail post adjacent to filled joints (except at end bents) normal to grade.

Barrier curb to be built parallel to grade with barrier curb joints (except at end bents) normal to grade.

All exposed edges of barrier curb shall have ½" radius or ⅝" bevel unless otherwise noted.

All rail splices shall be located near ¼ point between rail posts.

A thin coating of material shall be applied to the stainless steel cap screws and the fillister head machine screws to prevent locking to aluminum posts or tube. The coating material shall be equal to Wynn Oil Company's "Viscotene" or Stahl Specialty Company's "PBC 516" or National Chemsearch Corporation's "Thread Eze".

231

DETAILED JULY 1979
CHECKED JULY 1979

Note: This drawing is not to scale. Follow dimensions.

Sheet No. 19 of 21.

JACKSON COUNTY

A-1643R

MISSOURI STATE HIGHWAY DEPARTMENT

FED. ROAD DIST. NO.	STATE	FED. AID PROJ. NO.	FISCAL YEAR	SHEET NO.	TOTAL SHEETS
5	MO.		19	49	

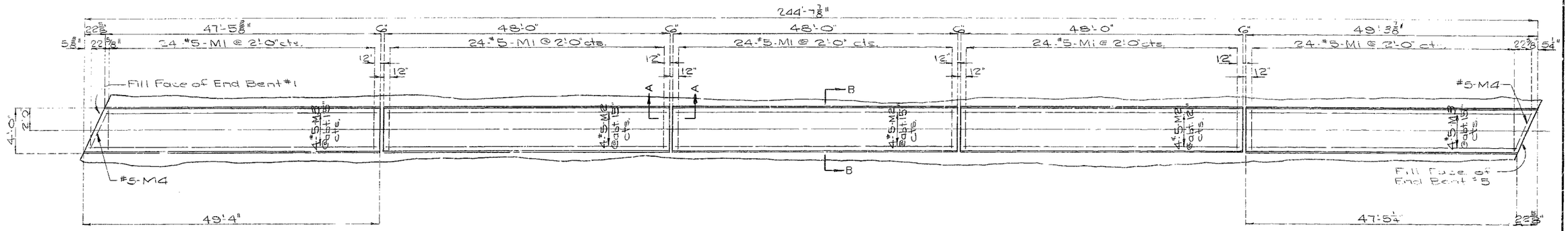

PART PLAN OF MEDIAN SHOWING DIMENSIONS AND REINFORCEMENT

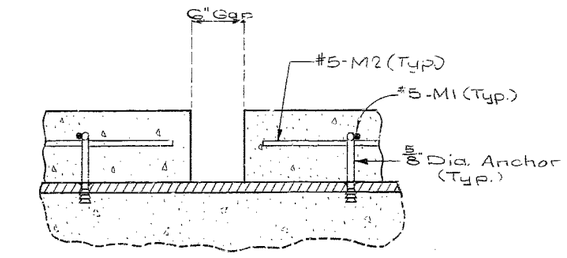

PART SECTION A-A

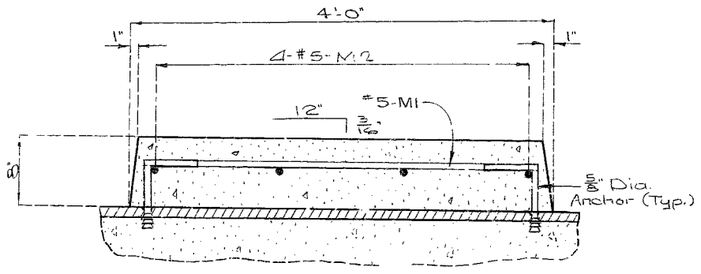

PART SECTION B-B

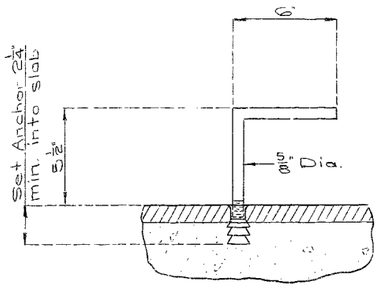

DETAIL OF ANCHOR FOR MEDIAN
(242 Required)

Note: Anchors shall be of the multi-set, steel flange drop in type.
Cost of furnishing and installing hook anchor bolt assemblies shall be included in price bid for Class B2 Concrete.

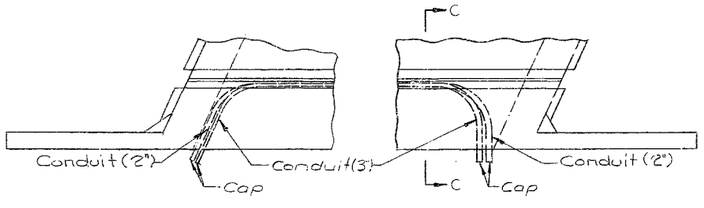

PART PLAN SHOWING CONDUIT AT END BENTS

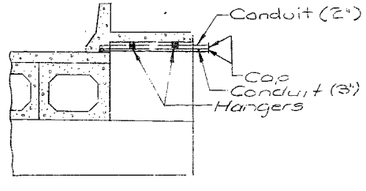

PART SECTION C-C

DETAILED JULY 1979
CHECKED JULY 1979

Note: This drawing is not to scale. Follow dimensions.

Sheet No. 19 of 21.

JACKSON COUNTY

A-1643R

FOR INFORMATION ONLY

A16433, Sht. 33

MISSOURI STATE HIGHWAY DEPARTMENT

FED. ROAD DIST. NO.	STATE	FED. AID PROJ. NO.	FISCAL YEAR	SHEET NO.	TOTAL SHEETS
5	MO.		19	50	

COMPLETE BILL OF REINFORCING STEEL

NO. REQD.	MARK NO. SIZE	MARK NO. MARK	LOCATION	EPOXY (E)	SHAPE NO.	STIRRUP (S)	SUBSTR. (X)	VARIES (V)	NO. EACH	DIMENSIONS B FT. IN.	C FT. IN.	D FT. IN.	E FT. IN.	F FT. IN.	H FT. IN.	K FT. IN.	NOMINAL LENGTH FT.IN.	ACTUAL LENGTH FT.IN.	WEIGHT LBS.
			SUBSTRUCTURE																
			INT. BENT NO.264																
32		6D1	FOOTING		10	S	X				3 3.000	18.000					8 0	7 8	368
32		10D2	FOOTING & COL.		17		X			7 10.000							9 3	9 3	1274
16		7H10	BEAM		7		X			4 0.000	2 9.500						9 6	9 6	311
4		9H11	BEAM		18		X			27 6.000							30 0	30 0	408
4		9H12	BEAM		18		X			25 7.000							28 1	28 1	382
4		6H13	BEAM		20		X			25 7.000							25 7	25 7	154
12		9H14	BEAM		20		X			25 7.000							25 7	25 7	1044
78		4P1	COLUMN		16		X			2 9.000							9 6	9 6	495
14		6U3	BEAM		13	S	X	V	2	2 11.000	3 3.000	2 11.000	3 3.000				13 6	13 0	
			INCR = 0.375 IN							2 11.000	3 1.750	2 11.000	3 1.750				13 4	12 10	272
40		6U4	BEAM		13	S	X	V	2	2 11.000	3 1.625	2 11.000	3 1.625				13 3	12 10	
			INCR = 0.375 IN							2 11.000	2 10.875	2 11.000	2 10.875				12 10	12 4	756
14		6U5	BEAM		13	S	X	V	2	2 11.000	2 10.750	2 11.000	2 10.750				12 10	12 4	
			INCR = 0.500 IN							2 11.000	2 9.375	2 11.000	2 9.375				12 7	12 1	257
8		10V9	COLUMN BT. 2		17		X			20 5.000							21 10	21 10	752
8		10V10	COLUMN BT. 2		17		X			21 5.000							22 10	22 10	786
8		10V11	COLUMN BT. 4		17		X			20 2.000							21 7	21 7	743
8		10V12	COLUMN BT. 4		17		X			21 2.000							22 7	22 7	777
			INT. BENT NO. 3																
16		10D2	FOOTING & COLUMN		17		X			7 10.000							9 3	9 3	637
4		6D3	FOOTING		10	S	X				3 6.000	7 3.000					14 3	13 11	84
12		5D4	FOOTING		20		X			5 9.000							5 9	5 9	72
8		8D5	FOOTING		20		X			8 0.000							8 0	8 0	171
8		7H10	BEAM		7		X			4 0.000	2 9.500						9 6	9 6	155
2		9H11	BEAM		18		X			27 6.000							30 0	30 0	204
2		9H12	BEAM		18		X			25 7.000							28 1	28 1	191
2		6H13	BEAM		20		X			25 7.000							25 7	25 7	77
7		9H14	BEAM		20		X			25 7.000							25 7	25 7	609
41		4P1	COLUMN		16		X			2 9.000							9 6	9 6	260
51		6U6	BEAM		13	S	X	V	1	2 11.000	3 3.125	2 11.000	3 3.125				13 6	13 1	
			INCR = 0.250 IN							2 11.000	2 9.250	2 11.000	2 9.250				12 7	12 1	964
8		10V13	COLUMN		17		X			21 3.000							22 8	22 3	780
8		10V14	COLUMN		17		X			22 3.000							23 8	23 8	815
			SUPERSTRUCTURE																
			END BENT NO 1																
6		6F1	BEAM & WING		23	S				14.250	5 6.750	14.250	7.750	12.000	7.750	12.000	7 11	7 11	71
10		6H1	BEAM		20					28 11.000							28 11	28 11	434
3		4H3	BACKWALL		15	S				2 5.750	4 10.000			2 3.000	12.500		7 4	7 3	15
6		4H4	BACKWALL		20					28 11.000							28 11	28 11	116
3		4H5	BACKWALL		21	S				2 5.750	18.000	22.000		2 3.000	12.500		5 10	5 7	11
6		6H6	WING		20					13 6.000							13 6	13 6	122
14		6H7	WING		20			V	2	4 9.000							4 9	4 9	
			INCR = 16.375 IN							12 11.000							12 11	12 11	186

COMPLETE BILL OF REINFORCING STEEL

NO. REQD.	MARK NO. SIZE	MARK NO. MARK	LOCATION	EPOXY (E)	SHAPE NO.	STIRRUP (S)	SUBSTR. (X)	VARIES (V)	NO. EACH	DIMENSIONS B FT. IN.	C FT. IN.	D FT. IN.	E FT. IN.	F FT. IN.	H FT. IN.	K FT. IN.	NOMINAL LENGTH FT.IN.	ACTUAL LENGTH FT.IN.	WEIGHT LBS.
2		6T1	WING		25	S				2 0.500	11 5.375	3 4.000			5 6.000	10 0.500	16 10	16 9	50
5		6V1	BACKWALL		19	S				7 5.000	4 3.000						11 8	11 6	86
10		6V2	BACKWALL		20					7 5.000							7 5	7 5	111
26		6V3	BACKWALL	E	19	S				5 .000	4 3.000						9 4	9 2	358
26		6V4	BACKWALL		20					5 1.000							5 1	5 1	199
20		6V5	WING		20			V	2	2 5.000							2 5	2 5	
			INCR = 6.500 IN							7 4.000							7 4	7 4	146
4		6V6	WING		20					7 9.000							7 9	7 9	47
28		4U1	BEAM		13	S		V	1	2 6.000	2 9.000	2 6.000	2 9.000				11 3	11 0	
			INCR = 0.500 IN							2 6.000	3 3.750	2 6.000	3 3.750				12 5	12 2	217
4		4U2	BEAM		10	S		V	1		2 9.000	2 6.000					8 0	7 10	
			INCR = 4.000 IN								3 3.000	2 6.000					9 0	8 10	22
			END BENT NO 5																
6		6F2	BEAM & WING		23	S				14.250	3 7.500	14.250	12.000	7.750	12.000	7.750	6 0	5 11	53
10		6H1	BEAM		20					28 11.000							28 11	28 11	434
6		4H4	BACKWALL		20					28 11.000							28 11	28 11	116
6		6H6	WING		20					13 6.000							13 6	13 6	122
3		4H19	BACKWALL		21	S				2 5.750	22.000	18.000			2 3.000	12.500	5 10	5 7	11
3		4H5	BACKWALL		21	S				2 5.750	4 10.000				2 3.000	12.500	7 4	7 2	14
16		6H9	WING		20			V	2	3 11.500							4 0	4 0	
			INCR = 15.375 IN							12 11.500							13 0	13 0	20
2		6T2	WING		25	S				2 0.000	11 8.250	3 3.000			5 11.000	10 1.000	16 11	16 10	51
2*		4U1	BEAM		13	S		V	1	2 6.000	2 9.000	2 6.000	2 9.000				11 3	11 0	
			INCR = 0.500 IN							2 6.000	3 3.750	2 6.000	3 3.750				12 5	12 2	217
4		4U2	BEAM		10	S		V	1		2 9.000	2 6.000					8 0	7 10	
			INCR = 4.000 IN								3 3.000	2 6.000					9 0	8 10	22
5		6V1	BACKWALL		19	S				7 5.000	4 3.000						11 8	11 6	86
10		6V2	BACKWALL		20					7 5.000							7 5	7 5	111
24		6V3	BACKWALL	E	19	S				5 1.000	4 3.000						9 4	9 2	330
>6										1.000							5 1	5 1	199
20		6V7	WING		20			V	2	2 4.500							2 5	2 5	
			INCR = 7.000 IN							7 7.500							7 8	7 8	151
4		6V8	WING		20					7 9.500							7 10	7 10	47
78		5H15	DIAPH		20					3 6.000							3 6	3 6	285
12		5H16	DIAPH		20					22 4.000							22 4	22 4	280
18		5H17	DIAPH		13	S				10.750	23.000				9.750	4.625	2 10	2 9	52
18		5H18	DIAPH		21	S				12.000	23.000				10.875	5.125	2 11	2 8	50
120		5M1	MEDIAN		20					3 7.000							3 7	3 7	448
12		5M2	MEDIAN		20					47 9.000							47 9	47 9	593
8		5M3	MEDIAN		20			V	2	47 3.500							47 4	47 4	
			INCR = 6.625 IN							48 11.500							49 0	49 0	402
2		5M4	MEDIAN		20					3 11.000							3 11	3 11	8
276		5R1	16 BARRIER CURB		19	S				2 7.000	3.500						2 11	2 9	792
276		5R2	16 BARRIER CURB		15	S				2 7.125	3.500				2 7.000	3.000	2 11	2 10	816
30		5R3	16 BARRIER CURB		19	S				11.000	6.000						17	16	42
12		5R6	16 BARRIER CURB		27	S					6.000	11.125	14.000		9.125	6.375	2 7	2 6	31
1		5R5	16 BARRIER CURB		20					45 0.000							45 0	45 0	47
6		5R6	16 BARRIER CURB		20					45 4.000							45 4	45 4	284
6		5R7	16 BARRIER CURB		20					44 10.000							44 10	44 10	281
2		5R8	16 BARRIER CURB		20					3 9.000							3 9	3 9	8
32		5R9	END POSTS		20					7 5.000							7 5	7 5	248
60		5R10	BARRIER CURBS		20					9 9.000							9 9	9 9	610
14		5R11	16 BARRIER CURB		20					54 9.000							54 9	54 9	799
258		5R12	20 BARRIER CURB		15	S				2 6.125	6.000				2 6.000	3.000	3 0	2 11	785

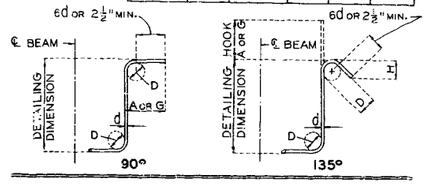

STIRRUP HOOK DIMENSIONS

GRADES 40-50-60 KSI

BAR SIZE	D (MIN.)	90° HOOK HOOK A OR G	135° HOOK HOOK A OR G	135° HOOK APPROX. H
#3	1-1/2"	4"	4"	2-1/2"
#4	2"	4-1/2"	4-1/2"	3"
#5	2-1/2"	6"	5-1/2"	3-3/4"
#6	4-1/2"	8"	7"	4-1/2"

NOTE: UNLESS OTHERWISE NOTED DIAMETER "D" IS THE SAME FOR ALL BENDS AND HOOKS ON A BAR.

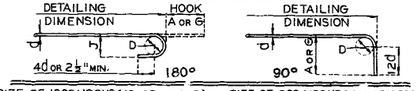

SIZE OF 180° HOOKS (GRADE 40 KSI)
D = 5d FOR #3 THRU #11
D = 10d FOR #14 AND #18

SIZE OF 90° HOOKS (ALL GRADES) AND 180° HOOKS (GRADE 60 KSI)
D = 6d FOR #3 THRU #8
D = 8d FOR #9, #10 AND #11
D = 10d FOR #14 AND #18

END HOOK DIMENSIONS

BAR SIZE	180° HOOKS GRADE 40 A OR G	180° HOOKS GRADE 40 J	180° HOOKS GRADE 60 A OR G	180° HOOKS GRADE 60 J	90° HOOKS ALL GRADES A OR G
#3	5"	2-3/4"	5"	3"	6"
#4	6"	3-1/2"	6"	4"	8"
#5	7"	4-1/2"	7"	5"	10"
#6	8"	5-1/4"	8"	6"	12"
#7	9"	6-1/4"	10"	7"	14"
#8	10"	7"	11"	8"	16"
#9	12"	8"	15"	11-1/4"	19"
#10	13"	9"	17"	12-3/4"	22"
#11	14"	10"	19"	14-1/4"	2'-0"
#14	2'-2"	20-1/2"	2'-2"	20-1/2"	2'-7"
#18	2'-11"	2'-3"	2'-11"	2'-3"	3'-5"

NOTES:
ALL STANDARD HOOKS AND BENDS OTHER THAN 180 DEG. TO BE BENT WITH SAME PROCEDURE AS FOR 90 DEG. STD. HOOKS.

HOOKS AND BENDS SHALL BE IN ACCORDANCE WITH THE PROCEDURES AS SHOWN ON THIS SHEET.

E - EPOXY COATED REINFORCEMENT.

S - STIRRUP.

X - BAR IS INCLUDED IN SUBSTRUCTURE QUANTITIES.

V - BAR DIMENSIONS VARY IN EQUAL INCREMENTS BETWEEN DIMENSIONS SHOWN ON THIS LINE AND THE FOLLOWING LINE.

NO. EA. - NUMBER OF BARS OF EACH LENGTH.

NOMINAL LENGTHS - ARE BASED ON OUT TO OUT DIMENSIONS SHOWN IN BENDING DIAGRAMS AND ARE LISTED FOR FABRICATORS USE. (NEAREST INCH)

ACTUAL LENGTHS - ARE MEASURED ALONG CENTERLINE BAR TO THE NEAREST INCH.

* ALL HOOKS AND BENDS FOR SHAPE NO. 12 - GRADE 40 (ONLY) ARE BASED ON D = 5d.

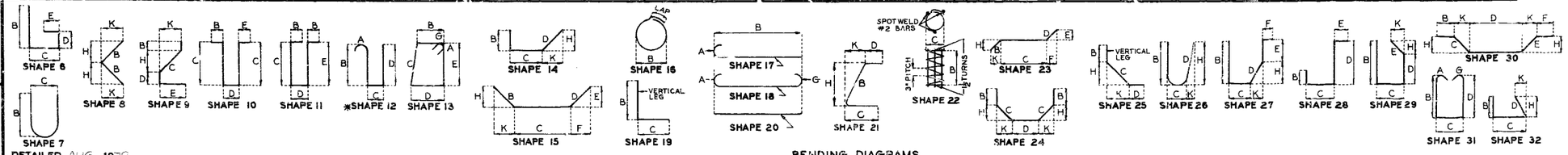

BENDING DIAGRAMS

STD. 90.8 REVISED OCT. 1978
MAY 1974

DETAILED AUG 1979
CHECKED AUG 1979

Note: This drawing is not to scale. Follow dimensions.

Sheet No. 20 of 2

JACKSON COUNTY

A-1643R

4-34

MISSOURI STATE HIGHWAY DEPARTMENT

FED. ROAD DIST. NO.	STATE	FED. AID PROJ. NO.	FISCAL YEAR	SHEET NO.	TOTAL SHEETS
5	MO		19	51	

COMPLETE BILL OF REINFORCING STEEL

NO. REQD.	MARK NO. SIZE	MARK NO. MARK	LOCATION	EPOXY (E)	SHAPE NO.	STIRRUP (S)	SUBSTR. (X)	VARIES (V)	NO. EACH	DIMENSIONS B FT.	B IN.	C FT.	C IN.	D FT.	D IN.	E FT.	E IN.	F FT.	F IN.	H FT.	H IN.	K FT.	K IN.	NOMINAL LENGTH FT.	NOMINAL LENGTH IN.	ACTUAL LENGTH FT.	ACTUAL LENGTH IN.	WEIGHT LBS.
258		5R13	20 BARRIER CURB		19	S				2	6.000		6.000											5	0	2	11	785
255		5R14	20 BARRIER CURB		27	S							5.000		11.125		7.000		12.000		9.125		6.375	3	3	3	1	820
258		5R15	20 BARRIER CURB		19	S					17.000		9.000											2	2	2	1	561
3		5R16	20 BARRIER CURB		20					35	2.000													35	2	35	2	110
2		5R17	20 BARRIER CURB		20					4	9.000													4	9	4	9	10
2		5R18	20 BARRIER CURB		15	S					15.500	6	2.000								4.000		15.000	7	6	7	5	15
3		5R19	20 BARRIER CURB		20					36	3.000													36	3	36	3	113
2		5R20	END POST		20					4	2.000													4	2	4	2	9
2		5R21	END POST		15	S					10.250	6	6.000								2.500		10.000	7	4	7	4	15
6		5R22	END POST		19	S		V	2		12.750		6.000											18		18		
			INCR = 1.500 IN								15.750		6.000											22		21		10
8		5R23	END POST		19	S		V	2		17.750		6.000											2	0	23		
			INCR = 1.000 IN								20.750		6.000											2	3	2	2	17
8		5R24	END POST		19	S		V	2		21.750		6.000											2	4	2	3	
			INCR = 3.000 IN							2	7.250		6.000											3	1	3	0	22
8		5R25	END POST		19	S				2	11.500		6.000											3	6	3	4	26
6		5R26	END POST		19	S		V	2		23.750		6.000											2	6	2	5	
			INCR = 3.000 IN							2	5.750		6.000											3	0	2	11	17
14		5R27	16 BARRIER CURB		27	S							6.000		11.125		3.000				9.125		6.375	20		19		23
6		5R28	20 BARRIER CURB		20					55	0.000													55	0	55	0	344
1		5R29	16 BARRIER CURB		20					44	6.000													44	6	44	6	46
8		5R30	END POST		19	S		V	2		20.750		6.000											2	3	2	2	
			INCR = 1.000 IN								23.750		6.000											2	6	2	5	19
3		5R31	20 BARRIER CURB		20					45	2.000													45	2	45	2	141
3		5R32	20 BARRIER CURB		20					45	10.000													45	10	45	10	143
12		5R33	20 BARRIER CURB		20					38	5.000													38	5	38	5	481
560		5S1	SLAB	E	20					21	4.000													21	4	21	4	12461
46		5S2	SLAB	E	20			V	2		18.250													18		19		
			INCR = 10.500 IN							20	10.375													20	10	20	10	536
126		5S3	SLAB	E	20					36	6.000													36	6	36	6	4797
70		7S4	SLAB	E	20					39	2.000													39	2	39	2	5604
34		7S5	SLAB	E	20					48	2.000													48	2	48	2	3347
243		5S6	SIDEWALK		17						5 2.500													5	10	5	10	1478
1		5S7	SIDEWALK		17						3 0.000													3	7	3	7	4
2		5S8	SIDEWALK		17						5 11.000													6	6	6	6	14
1		5S9	SIDEWALK		20						3 6.000													3	6	3	6	4
5		4S10	SIDEWALK		20					24	10.000													24	10	24	10	83
10		4S11	SIDEWALK		20			V	2	23	7.000													23	7	23	7	
			INCR = 5.750 IN								25 5.500													25	6	25	6	164
20		4S12	SIDEWALK		20					38	4.000													38	4	38	4	512
5		4S13	SIDEWALK		20					25	0.000													25	0	25	0	84

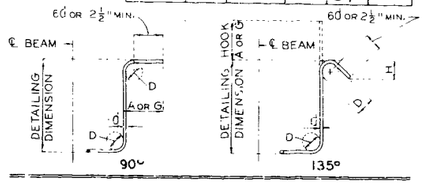

STIRRUP HOOK DIMENSIONS
GRADES 40-50-60 KSI

BAR SIZE	D (IN.)	90° HOOK HOOK A OR G	135° HOOK HOOK A OR G	135° HOOK APPROX. H
#3	1-1/2"	4"	4"	2-1/2"
#4	2"	4-1/2"	4-1/2"	3"
#5	2-1/2"	6"	5-1/2"	3-3/4"
#6	4-1/2"	8"	7"	4-1/2"

NOTE: UNLESS OTHERWISE NOTED DIAMETER "D" IS THE SAME FOR ALL BENDS AND HOOKS ON A BAR.

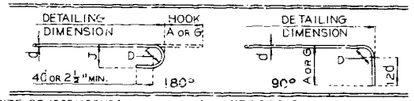

SIZE OF 180° HOOKS (GRADE 40 KSI)
D = 5d FOR #3 THRU #11
D = 10d FOR #14 AND #18

SIZE OF 90° HOOKS (ALL GRADES) AND 180° HOOKS (GRADE 60 KSI)
D = 6d FOR #3 THRU #8
D = 8d FOR #9, #10 AND #11
D = 10d FOR #14 AND #18

END HOOK DIMENSIONS

BAR SIZE	180° HOOKS GRADE 40 A OR G	180° HOOKS GRADE 40 J	180° HOOKS GRADE 60 A OR G	180° HOOKS GRADE 60 J	90° HOOKS ALL GRADES A OR G
#3	5"	2-3/4"	5"	3"	6"
#4	6"	3-1/2"	6"	4"	8"
#5	7"	4-1/2"	7"	5"	10"
#6	8"	5-1/4"	8"	6"	12"
#7	9"	6-1/4"	10"	7"	14"
#8	10"	7"	11"	8"	16"
#9	12"	8"	15"	11-1/4"	19"
#10	13"	9"	17"	12-3/4"	22"
#11	14"	10"	19"	14-1/4"	21-0"
#14	21-2"	20-1/2"	21-2"	20-1/2"	21-7"
#18	21-11"	21-3"	21-11"	21-3"	31-5"

NOTES: ALL STANDARD HOOKS AND BENDS OTHER THAN 180 DEG. TO BE BENT WITH SAME PROCEDURE AS FOR 90 DEG. STD. HOOKS.

HOOKS AND BENDS SHALL BE IN ACCORDANCE WITH THE PROCEDURES AS SHOWN ON THIS SHEET.

E - EPOXY COATED REINFORCEMENT.

S - STIRRUP.

X - BAR IS INCLUDED IN SUBSTRUCTURE QUANTITIES.

V - BAR DIMENSIONS VARY IN EQUAL INCREMENTS BETWEEN DIMENSIONS SHOWN ON THIS LINE AND THE FOLLOWING LINE.

NO. EA. - NUMBER OF BARS OF EACH LENGTH.

NOMINAL LENGTHS - ARE BASED ON OUT TO OUT DIMENSIONS SHOWN IN BENDING DIAGRAMS AND ARE LISTED FOR FABRICATORS USE. (NEAREST INCH)

ACTUAL LENGTHS - ARE MEASURED ALONG CENTERLINE BAR TO THE NEAREST INCH.

* ALL HOOKS AND BENDS FOR SHAPE NO. 12 - GRADE 40 (ONLY) ARE BASED ON D = 5d.

Note: Two additional #5 S, #6 S, #7 S, #7 X have been added for testing purposes. See Special Provisions.

BENDING DIAGRAMS

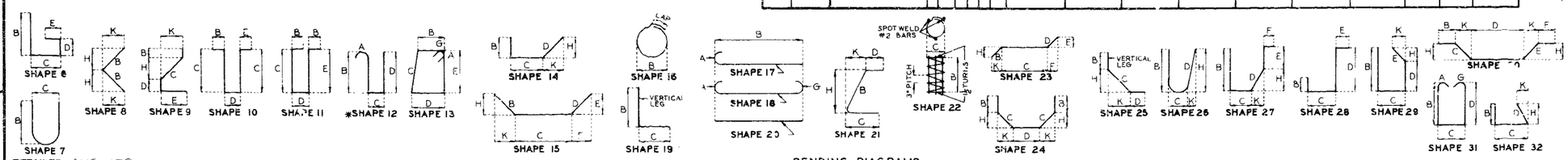

STD. 90.8.5	REVISED
MAY 1974	OCT. 1978

DETAILED AUG 1979
CHECKED AUG 1979

Note: This drawing is not to scale. Follow dimensions.

Sheet No. 51 of 51.

JACKSON COUNTY

A-1643R

MISSOURI STATE HIGHWAY DEPARTMENT

FED. ROAD DIST. NO.	STATE	FED. AID PROJ. NO.	FISCAL YEAR	SHEET NO.	TOTAL SHEETS
5	MO.		19	31	

U.I.P. Exist. (45', 75', 75', 45') Cont. Box Gdr. Spans
Remodeled & Widened on South Side with (44.75', 75.25', 75.25', 44.75') P/S Conc. Box Gdr. Spans

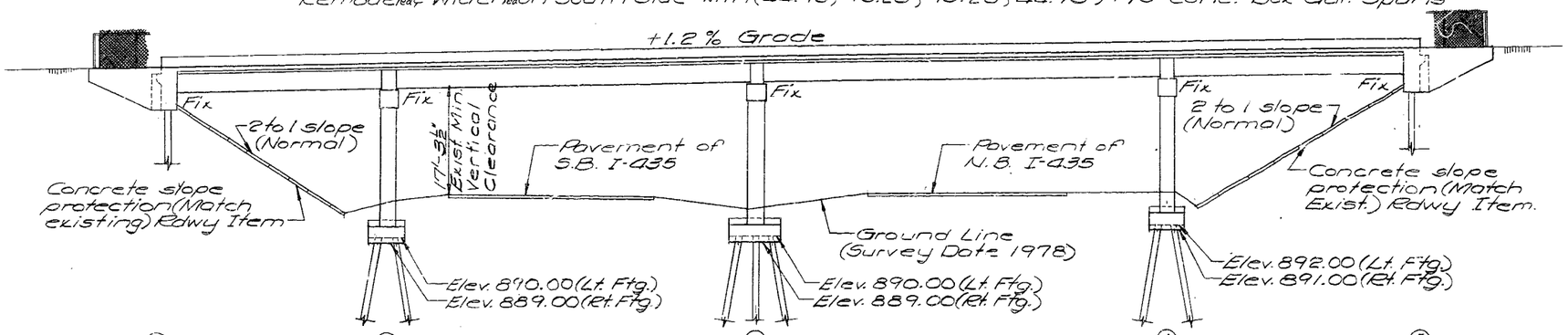

Note : Compacted roadway fill was completed to the final roadway section and up to the elevation of the bottom of the concrete beam within the limits of the structure and for not less than 25' in back of the fill face of the end bents before piles are driven for any bents falling within the embankment section.

GENERAL ELEVATION

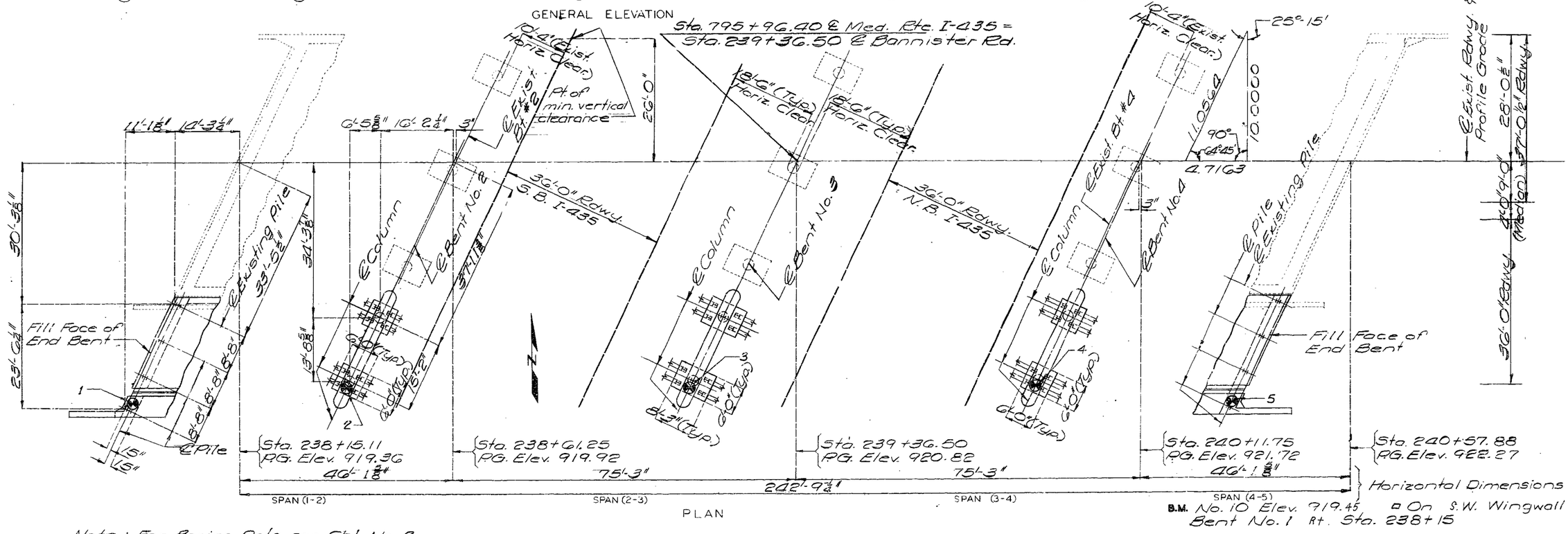

PLAN

B.M. No. 10 Elev. 919.45 ▫ On S.W. Wingwall Bent No. 1 Rt. Sta. 238+15

Note : For Boring Data see Sht. No. 2.
"8" Indicates location of boring.
For General Notes, Quantities & Pile Data Box. see Sht. No. 2.

BRIDGE: BANNISTER ROAD UNDERPASS
STATE ROAD INTERSTATE ROUTE 435
IN KANSAS CITY
PROJECT NO. **STA.** 795+96.40 L. MEDIAN
JOB NO. 4-1435-407 **RTE** I-435
JACKSON **COUNTY**
DATE 8-31-79

STD. 611.60
STD. 706.35
A-1643 R

DESIGNED MAR 1979
DETAILED JUNE 1979
CHECKED JULY 1979

Note: This drawing is not to scale. Follow dimensions.

Sheet No. 1 of 21.

MISSOURI STATE HIGHWAY DEPARTMENT

FED. ROAD DIST. NO.	STATE	FED. AID PROJ. NO.	FISCAL YEAR	SHEET NO.	TOTAL SHEETS
5	MO.		19	32	

FINAL PLANS

A-36

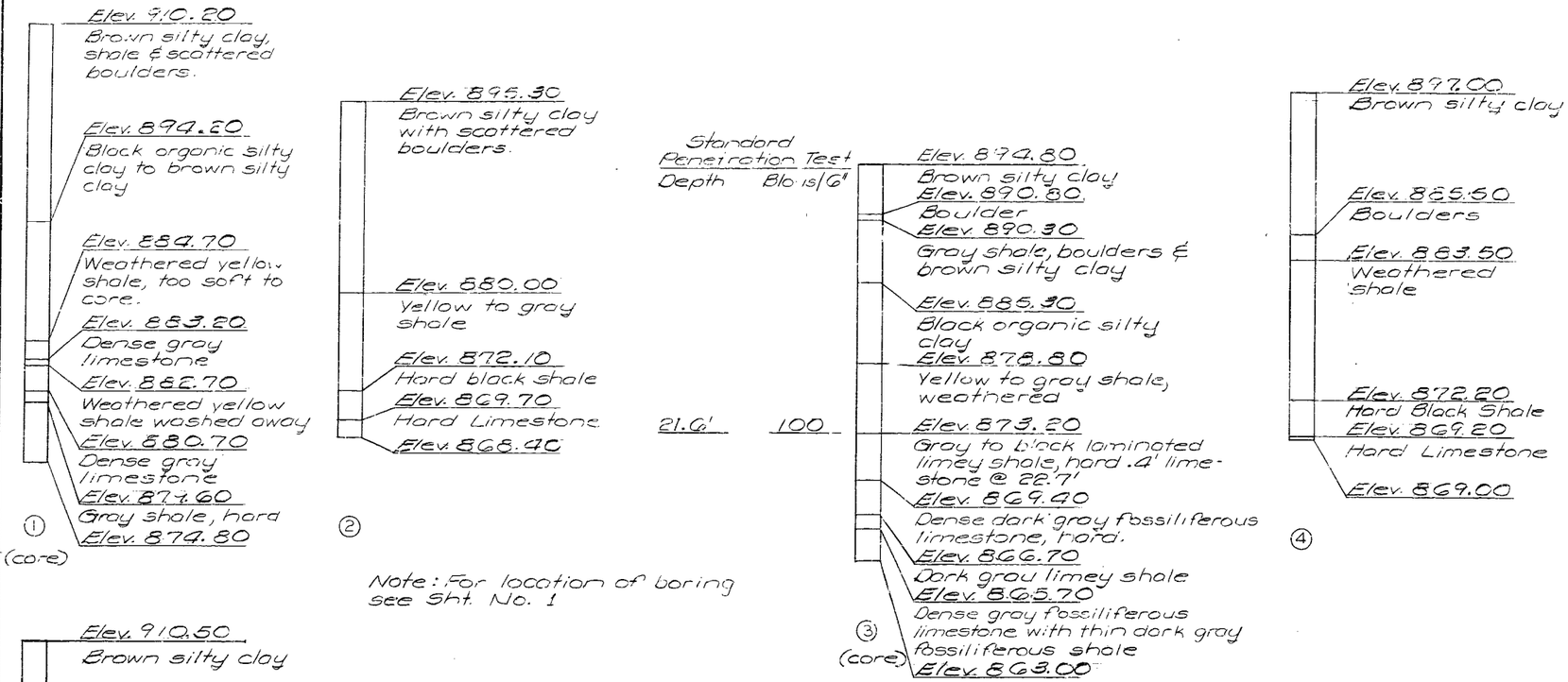

BORING DATA

GENERAL NOTES

Design Specifications: A.A.S.H.T.O. -1977 Load Factor Design

Design Loading:
HS 20-44 15#/sq. ft. Future Wearing Surface. Modified 24,000# Tandem Axle.
Earth 120#, Equivalent Fluid Pressure 30#
Superstructure: Simply supported composite

Design Unit Stresses:
Class B Concrete (substructure) f'c = 3000 psi.
Class B2 Concrete (superstructure except prestressed box girders) f'c = 4000 psi.
Reinforcing Steel (Grade 60) fy = 60,000 psi.
Steel Pile fy = 9000 psi.

Note: For Prestressed Girder Stresses see Sht. No. 10.
Bearings were 60 durometer Neoprene Pads.
All joint filler did meet the requirements of Std. Spec. 1057.2.4.
Falsework over existing lanes constructed with a minimum vertical clearance of 15'-0" from crown of existing lanes and a minimum lateral clearance of 40'-0" centered on existing lanes.
Traffic over structure was maintained during construction.
Minimum clearance to reinforcing steel was 1½" unless otherwise shown.
Outline of old work is indicated by light dashed lines. Heavy lines indicate new work.
Bars bonded in old concrete not removed cleanly stripped and embedded into new concrete where possible. If length is available, old bars did extend into new concrete at least 40 diameters for smooth bars and 30 diameters for deformed bars.

ESTIMATED QUANTITIES

ITEM		SUBSTR.	SUPERSTR.	TOTAL	
Class I Excavation	Cu. Yd.	113		113	
Structural Steel Pile (HP 10 x 42)	Lin. Ft.	626+66*		626+66*	90% Of Bid Price
Class B Concrete	Cu. Yd.	108.7		108.7	
Class B2 Concrete	Cu. Yd		246.4	246.4	
Latex Concrete Wearing Surface	Sq. Yd.		1537	1537	
Pedestrian Fence (72 in.)	Lin. Ft.		266	266	
Longitudinal Preformed Compression Jt. Seal (2.0 In.)	Lin. Ft.		243	243	
Prestressed Conc. Members, Box Section (45'-0" span)	Each		10	10	
Prestressed Conc. Members, Box Section (75'-0" span)	Each		10	10	
Reinforcing Steel (Grade 60)	Lbs.	13800	17140	30940	
Reinforcing Steel (Epoxy)	Lbs.		27,430	27,430	
Conduit System on Structure	Lump Sum			1	
Special Work	Lump Sum			1	
Curb Junction Box	Force Account		84.52	1	
Wing Wall Repair	Force Account		1,644.84	1	
Repair Conc. Deck (Half Sole)	Force Account		13,284.58	1	

Note: All concrete above lower construction joint in end bents is included with superstructure quantities.
All reinforcement in the end bents is included with superstructure quantities.
Cost of Plain Neoprene Bearing Pads (½" thick) was included in price bid for other items.

PILE DATA

BENT NO.	1	2	3-LT.	3-RT.	4-LT.	4-RT.	5-LT	5-RT
PILE TYPE AND SIZE	HP10x42	HP10x42	HP10x42	HP10x42	HP10x42	HP10x42	HP10x42	HP10x42
NUMBER	3	8	5	5	4	4	1	2
APPROXIMATE LENGTH FT	29	11	21	15	20	11	26	32
DESIGN BEARING TONS	47	56	53	53	56	56	47	47
HAMMER ENERGY ROD. FT LB.	10,600	13,200	12,500	12,500	13,200	13,200	10,600	10,600

Note: Minimum energy requirement of hammer based on plan length and design bearing value of piles.
All pile was driven to practical refusal.

DETAILED June 1979
CHECKED July 1979

Note: This drawing is not to scale. Follow dimensions.

JACKSON COUNTY

A-1643R

MISSOURI HIGHWAY AND TRANSPORTATION COMMISSION

STATE	PROJ. NO.	SHEET NO.
MO.		150
SEC./SUR. 26 TWP. 48N RGE. 33W		

NOTE: CONTRACTOR SHALL EXERCISE CAUTION WHEN WORKING NEAR CONDUIT AT NORTH END OF END BENT NO. 1.

U.I.P. EXIST. (45',75',75',45') CONT. BOX GDR. SPANS
WIDEN ON RIGHT AND LEFT WITH (44.75',75.25',75.25',44.75') F/S CONC. BOX GDR. SPANS

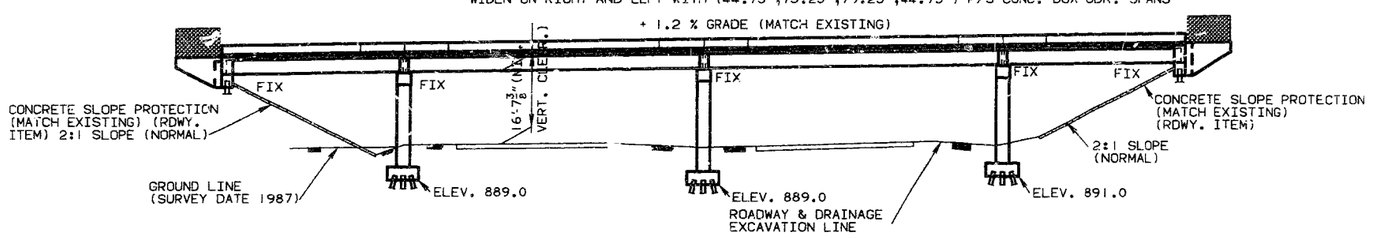

GENERAL ELEVATION

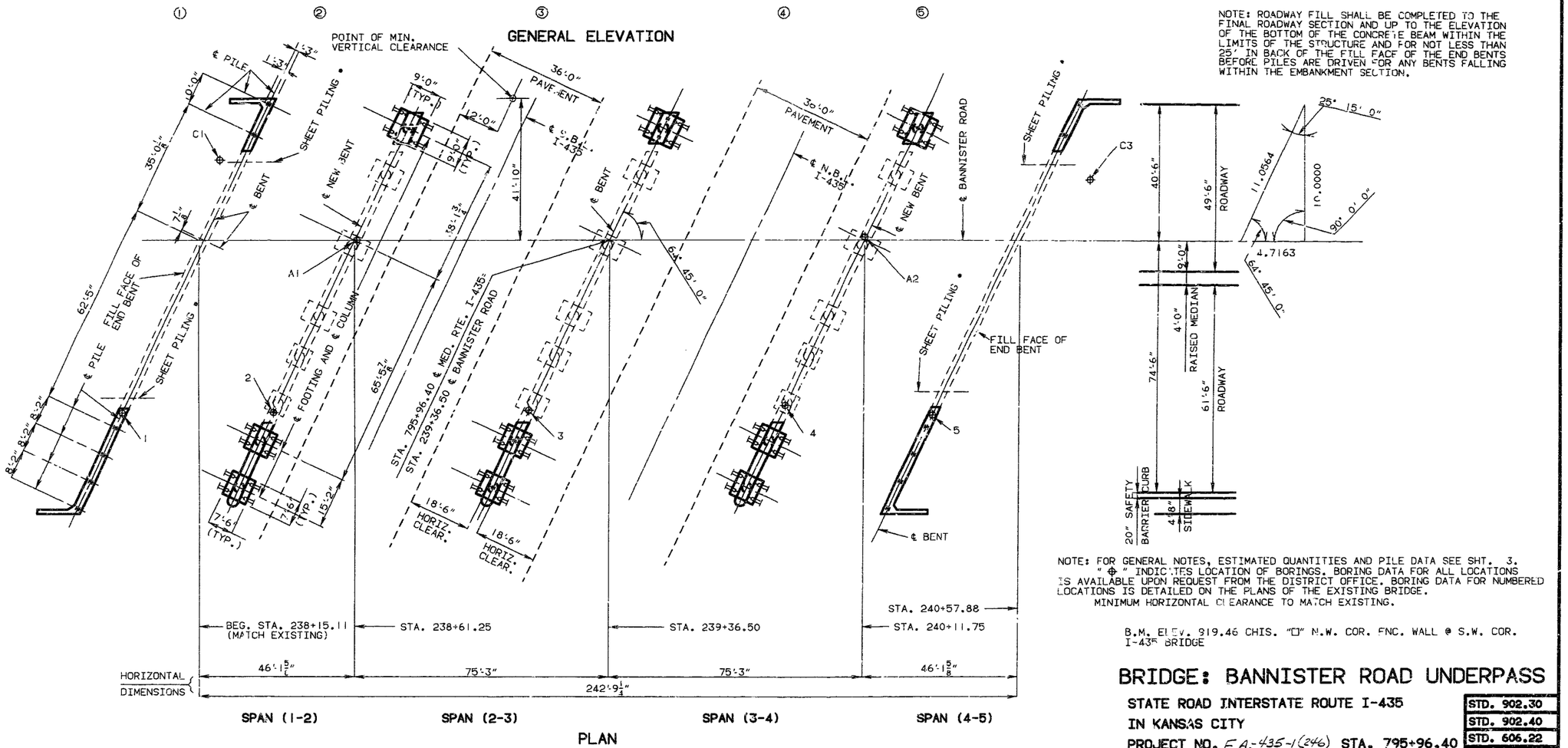

PLAN

NOTE: '•' PROVIDE SHEET PILING FOR GRADE DIFFERENTIAL OF FILL NEAR END BENTS.(SEE SPECIAL PROVISION)(TYP.)

NOTE: ROADWAY FILL SHALL BE COMPLETED TO THE FINAL ROADWAY SECTION AND UP TO THE ELEVATION OF THE BOTTOM OF THE CONCRETE BEAM WITHIN THE LIMITS OF THE STRUCTURE AND FOR NOT LESS THAN 25' IN BACK OF THE FILL FACE OF THE END BENTS BEFORE PILES ARE DRIVEN FOR ANY BENTS FALLING WITHIN THE EMBANKMENT SECTION.

NOTE: FOR GENERAL NOTES, ESTIMATED QUANTITIES AND PILE DATA SEE SHT. 3.
" ⊕ " INDICATES LOCATION OF BORINGS. BORING DATA FOR ALL LOCATIONS IS AVAILABLE UPON REQUEST FROM THE DISTRICT OFFICE. BORING DATA FOR NUMBERED LOCATIONS IS DETAILED ON THE PLANS OF THE EXISTING BRIDGE.
MINIMUM HORIZONTAL CLEARANCE TO MATCH EXISTING.

B.M. ELEV. 919.46 CHIS. "□" N.W. COR. FNC. WALL @ S.W. COR. I-435 BRIDGE

BRIDGE: BANNISTER ROAD UNDERPASS

STATE ROAD INTERSTATE ROUTE I-435
IN KANSAS CITY
PROJECT NO. F.A.-435-1(246) STA. 795+96.40
JOB NO. 41-806-435 RTE. I-435
JACKSON COUNTY
DATE 4/22/91

STD. 902.30
STD. 902.40
STD. 606.22
STD. 617.00
STD. 611.60
STD. 706.35
A-1643R1

DESIGNED JAN. 1991
DETAILED JAN. 1991
CHECKED JAN. 1991

NOTE: THIS DRAWING IS NOT TO SCALE. FOLLOW DIMENSIONS.

SHEET NO. 1 OF 26

8493

STATE	PROJ. NO.	SHEET NO.
NC.		15

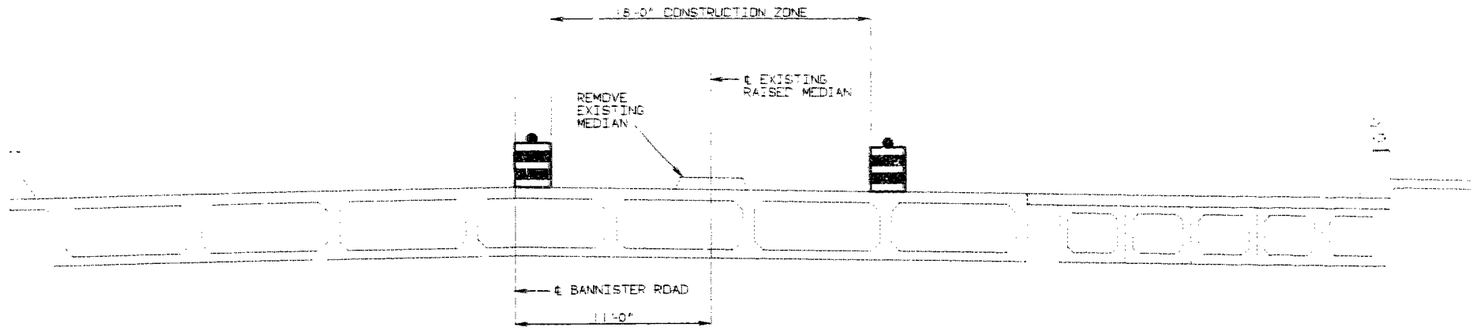

STAGE ONE CONSTRUCTION

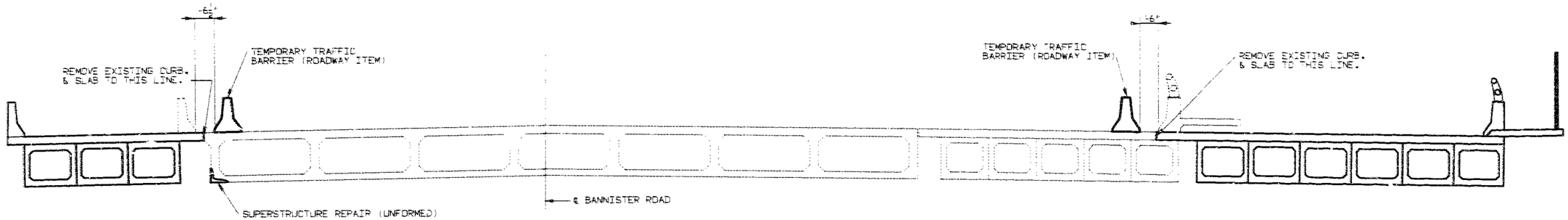

STAGE TWO CONSTRUCTION

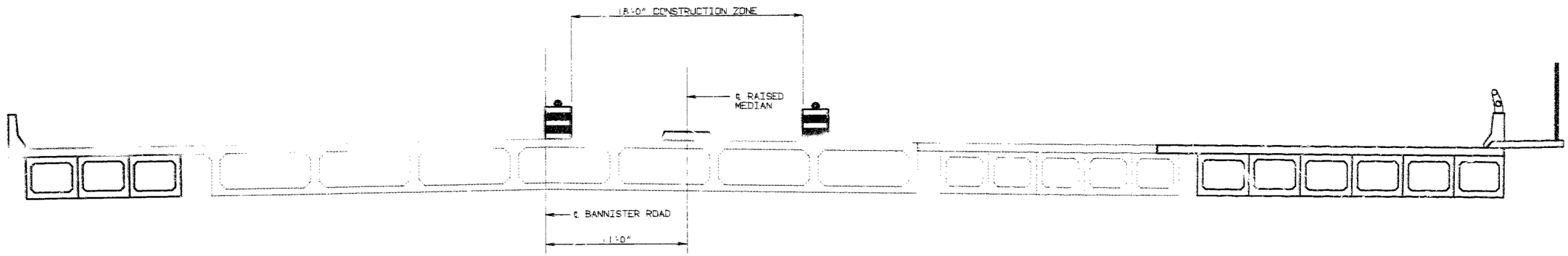

STAGE THREE CONSTRUCTION

DETAILS OF STAGE CONSTRUCTION

DETAILED FEB. 1991
CHECKED MAR. 1991

NOTE: THIS DRAWING IS NOT TO SCALE. FOLLOW DIMENSIONS.

SHEET NO. 2 OF 26.

JACKSON COUNTY A-1643R1

STATE	PROJ. NO.	SHEET NO.
MO.		152

ESTIMATED QUANTITIES

ITEM		SUBSTR.	SUPERSTR	TOTAL
REMOVAL & STORAGE OF EXIST. BRIDGE RAIL	LIN. FT.		226	226
CURB REMOVAL (BRIDGES)	LIN. FT.		747	747
PARTIAL REMOVAL OF SUBSTR. CONC.	LUMP SUM			1
PARTIAL REMOVAL OF EXIST. BRIDGE DECK	SQ. FT.		1184	1184
CLASS 1 EXCAVATION	CU. YD.	330		330
SHEET PILING	LUMP SUM			1
(72") PEDESTRIAN FENCE (STRUCTURES)	LIN. FT.		263	263
STRUCTURAL STEEL PILES (10")	LIN. FT.	444		444
STRUCTURAL STEEL PILES (12")	LIN. FT.	740		740
CLASS B CONCRETE (SUBSTR.)	CU. YD.	190.1		190.1
SUBSTR. REPAIR (UNFORMED)	SQ. FT.	70		70
SUPSTR. REPAIR (UNFORMED)	SQ. FT.		10	10
CLASS B2 CONCRETE (SUPSTR) CONC ON BOX GDR	CU. YD.		295.6	295.6
16" SAFETY BARRIER CURB	LIN. FT.		264	264
20" SAFETY BARRIER CURB	LIN. FT.		242	242
RAISED MEDIAN BARRIER	SQ. FT.		971	971
SIDEWALK (BRIDGES)	SQ. FT.		1133	1133
PLAIN NEOPRENE BEARING PADS	EACH		18	18
LAMINATED NEOPRENE BEARING PADS	EACH		54	54
P/S CONC. BOX GDR. (45' SPAN)	EACH		18	18
P/S CONC. BOX GDR. (75' SPAN)	EACH		18	18
REINFORCING STEEL (BRIDGES)	POUND	25740	8260	34000
CONDUIT SYSTEM ON STRUCTURE	LUMP SUM			1
REINFORCING STEEL (EPOXY COATED)	POUND		65690	65690
BRIDGE RAIL RELOCATED	LUMP SUM			1

NOTE: ALL CONCRETE ABOVE LOWER CONSTRUCTION JOINT IN END BENTS IS INCLUDED WITH SUPERSTRUCTURE QUANTITIES.

ALL REINFORCEMENT IN THE END BENTS IS INCLUDED WITH SUPERSTRUCTURE QUANTITIES.

THE COST OF FURNISHING, FABRICATING AND INSTALLING NEOPRENE BEARING PADS, COMPLETE-IN-PLACE, WILL BE PAID FOR AT THE CONTRACT UNIT PRICE FOR PLAIN AND LAMINATED NEOPRENE BEARING PADS PER EACH.

ALL CONCRETE AND REINFORCING STEEL IN THE SIDEWALK ARE INCLUDED IN THE SUPERSTRUCTURE QUANTITIES FOR SIDEWALKS.

ALL CONCRETE AND REINFORCING STEEL IN THE RAISED MEDIAN BARRIER ARE INCLUDED IN THE SUPERSTRUCTURE QUANTITIES FOR RAISED MEDIAN BARRIER.

COST OF FURNISHING AND INSTALLING RESIN ANCHOR SYSTEMS, COMPLETE IN PLACE, SHALL BE INCLUDED IN THE UNIT PRICE BID FOR CONCRETE.

PILE DATA

BENT NUMBER	1 LT.	1 RT.	2 LT.	2 RT.	3 LT.	3 RT.	4 LT.	4 RT.	5 LT.	5 RT.
PILE TYPE AND SIZE	HP10X42	HP10X42	HP12X53	HP12X53	HP12X53	HP12X53	HP12X53	HP12X53	HP10X42	HP10X42
NUMBER	2	4	5	8	6	10	5	8	2	4
APPROXIMATE LENGTH (FT.)	32	32	17	17	17	17	19	19	42	42
DESIGN BEARING (TONS)	52	52	60	69	61	64	60	69	52	52
HAMMER ENERGY REQ'D. (FT/LBS)	11500	11500	14100	16200	14400	16400	14100	16200	11500	11500

MINIMUM ENERGY REQUIREMENT OF HAMMER BASED ON PLAN LENGTH AND DESIGN BEARING VALUE OF PILES.
ALL PILE SHALL BE DRIVEN TO PRACTICAL REFUSAL.

GENERAL NOTES:

DESIGN SPECIFICATIONS: A.A.S.H.T.O.-1989 LOAD FACTOR DESIGN.
A.A.S.H.T.O.-1983 GUIDE SPECIFICATIONS FOR SEISMIC DESIGN PERFORMANCE CATEGORY A

DESIGN LOADING:

HS20-44 35# FUTURE WEARING SURFACE
MODIFIED 24,000# TANDEM AXLE
EARTH 120#/CU. FT., EQUIVALENT FLUID PRESSURE 45#/CU. FT.

SUPERSTRUCTURE: SIMPLY-SUPPORTED, NON-COMPOSITE FOR DEAD LOAD.
CONTINUOUS COMPOSITE FOR LIVE LOAD.

DESIGN UNIT STRESSES:

CLASS B CONCRETE (SUBSTRUCTURE) F'C=3,000 PSI

CLASS B2 CONCRETE (SUPERSTRUCTURE, EXCEPT PRESTRESSED GDRS., RAISED MEDIAN BARRIER AND SAFETY BARRIER CURB) F'C=4,000 PSI

CLASS B1 CONCRETE (SAFETY BARRIER CURB & RAISED MEDIAN BARRIER) F'C=4,000 PSI

REINFORCING STEEL (GRADE 60) FY=60,000 PSI

STEEL PILE FB=9,000 PSI

FOR PRESTRESSED GIRDER STRESSES, SEE SHT. 13 & 14.

NEOPRENE BEARING PADS: BEARINGS SHALL BE 60 DUROMETER NEOPRENE PADS.

JOINT FILLER: ALL JOINT FILLER SHALL MEET THE REQUIREMENTS OF STD. SPEC. 1057.2.4, EXCEPT AS NOTED.

REINFORCING STEEL: MINIMUM CLEARANCE TO REINFORCING STEEL SHALL BE 1 1/2", UNLESS OTHERWISE SHOWN.

BARS BONDED IN OLD CONCRETE NOT REMOVED SHALL BE CLEANLY STRIPPED AND EMBEDDED INTO NEW CONCRETE WHERE POSSIBLE. IF LENGTH IS AVAILABLE, OLD BARS SHALL EXTEND INTO NEW CONCRETE AT LEAST 30 DIAMETERS FOR DEFORMED BARS, UNLESS OTHERWISE NOTED.

CONSTRUCTION CLEARANCE: A MINIMUM VERTICAL CLEARANCE OF 15'-0" FROM CROWN OF EXISTING LANES AND A MINIMUM LATERAL CLEARANCE OF 40'-0" CENTERED ON EXISTING LANES SHALL BE MAINTAINED DURING CONSTRUCTION.

TRAFFIC MAINTAINED: TRAFFIC OVER STRUCTURE TO BE MAINTAINED DURING CONSTRUCTION. (SEE ROADWAY PLANS)

EXISTING STRUCTURE: OUTLINE OF OLD WORK IS INDICATED BY LIGHT DASHED LINES. HEAVY LINES INDICATE NEW WORK.

CONTRACTOR SHALL VERIFY ALL DIMENSIONS IN FIELD BEFORE ORDERING NEW MATERIALS.

RESIN ANCHOR SYSTEMS: THE CONTRACTOR SHALL USE ONE OF THE ANCHOR SYSTEMS LISTED IN THE SPECIAL PROVISIONS. THESE ANCHOR SYSTEMS SHALL BE INSTALLED ACCORDING TO THE MANUFACTURER'S SPECIFICATIONS EXCEPT AS MODIFIED BY THE JOB SPECIAL PROVISIONS AND THAT A PLAIN, #6, GRADE 60 REINFORCING BAR 2'-6" LONG SHALL BE SUBSTITUTED FOR THE THREADED ROD STUD. AN EPOXY COATED #4, GRADE 60, REINFORCING BAR 23" LONG SHALL BE SUBSTITUTED FOR THE THREADED ROD STUD IN THE RAISED MEDIAN BARRIER.

STATE	PROJ. NO.	SHEET NO.
MO.		153

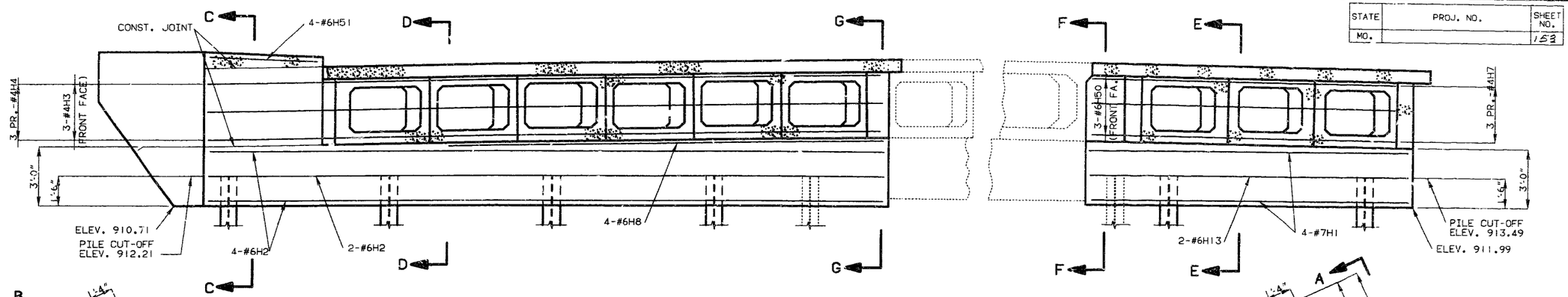

NOTE: FOR SECTION C-C, D-D, E-E, F-F AND G-G SEE SHEET NO. 5.
FOR ELEVATION A-A AND B-B SEE SHEET NO. 5.
FOR DETAILS OF STEEL PILE SPLICE SEE SHEET NO. 7 .
ALL V-BARS SHALL BE PLACED PARALLEL TO ℄ ROADWAY.
BEND #6F1 AND #6F3 IN FIELD TO CLEAR GIRDERS.

SECTION NEAR END BENT

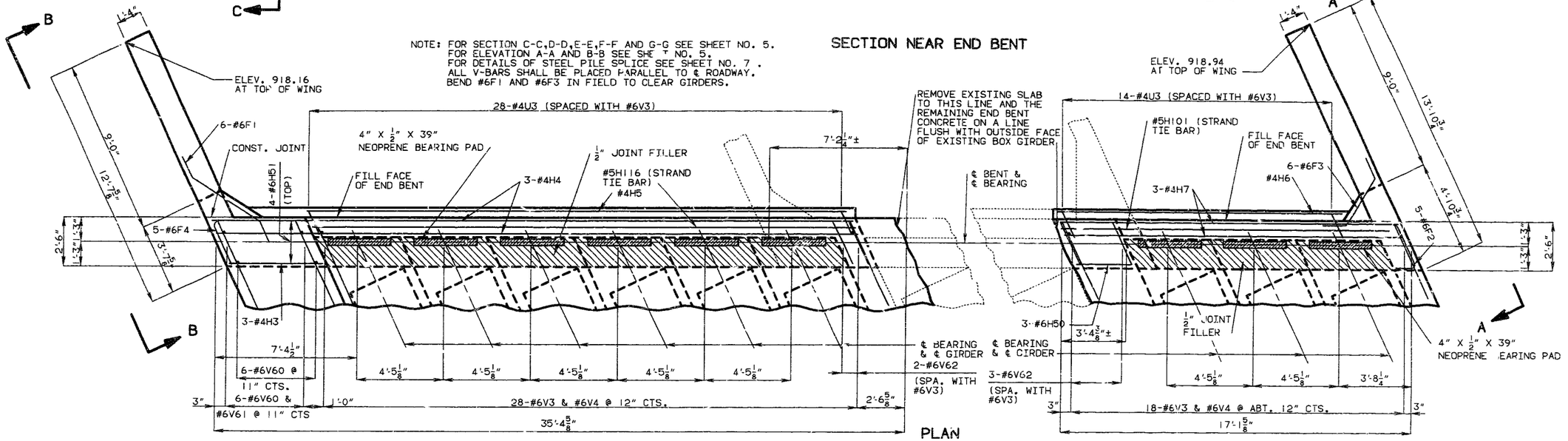

PLAN

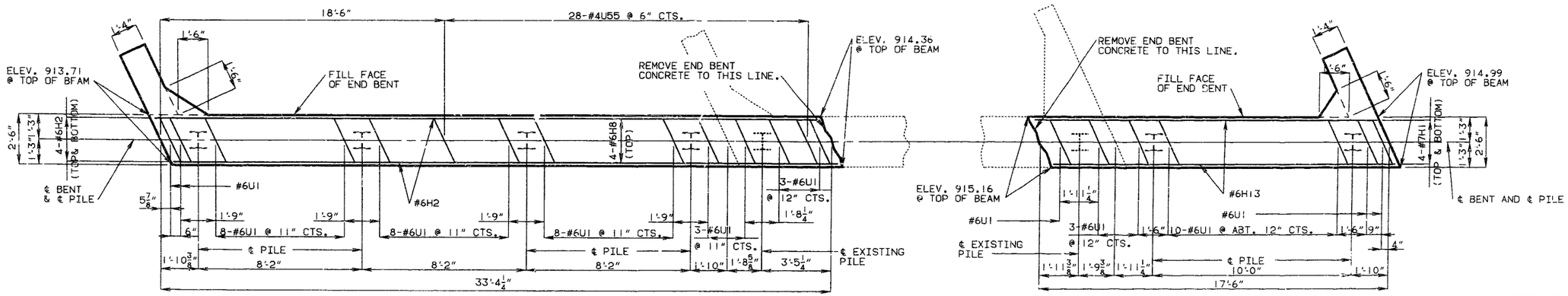

PLAN OF BEAM

DETAILED JAN. 1991
CHECKED MAR. 1991

NOTE: THIS DRAWING IS NOT TO SCALE. FOLLOW DIMENSIONS.

DETAILS OF END BENT NO. 1

SHEET NO. 4 OF 26

JACKSON COUNTY

A-1643R1

STATE	PROJ. NO.	SHEET NO.
MO.		154

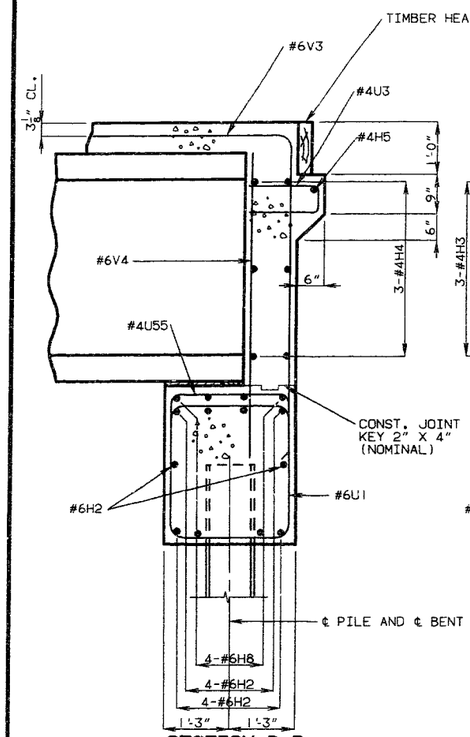

SECTION D-D

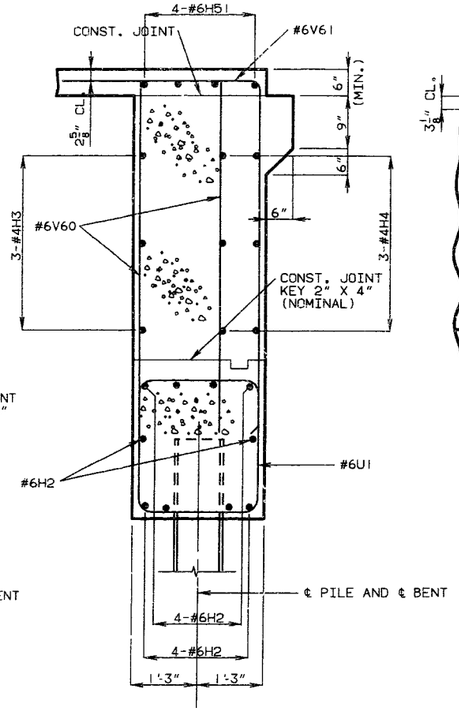

SECTION C-C

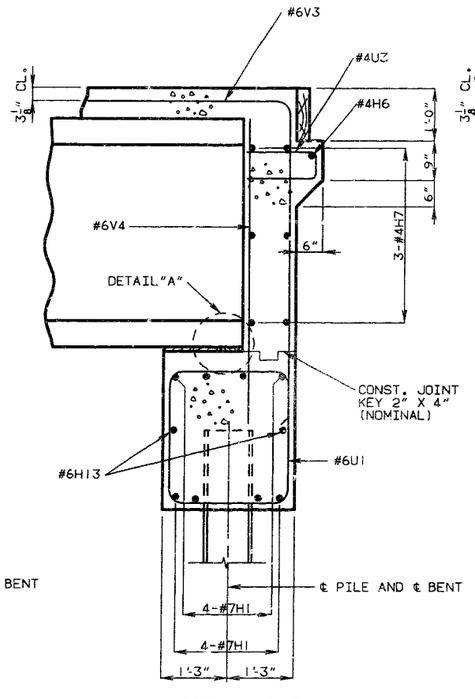

SECTION E-E

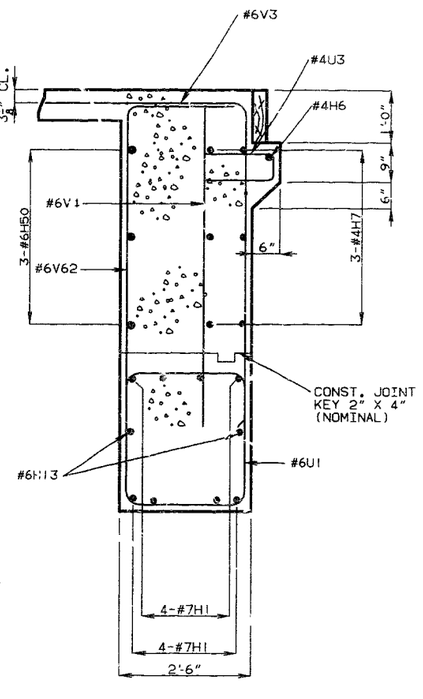

SECTION F-F

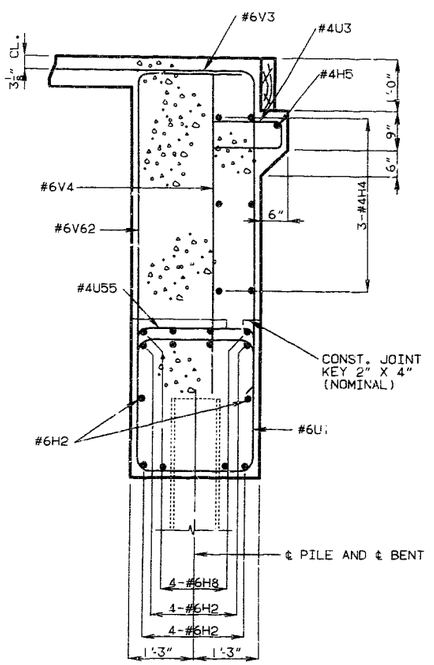

SECTION G-G

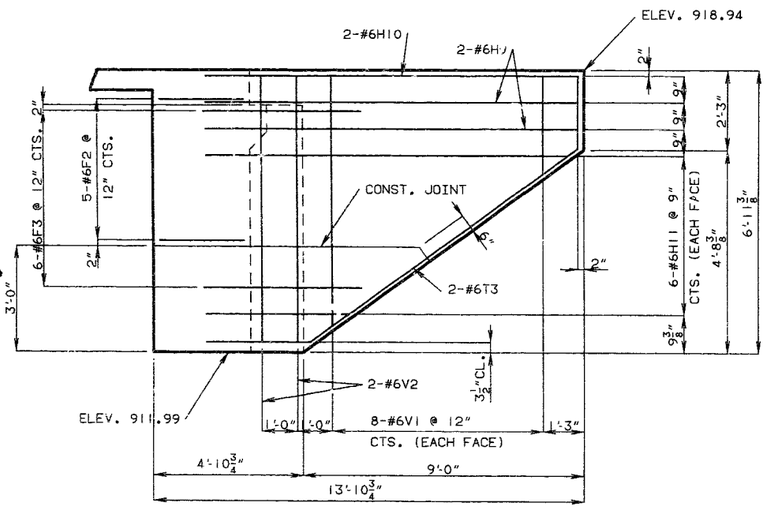

ELEVATION A-A

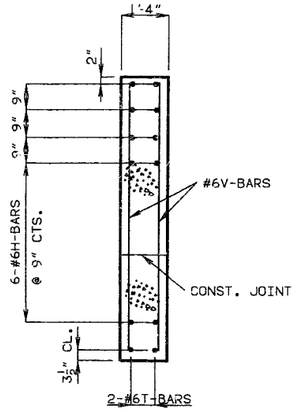

SECTION THRU WINGS

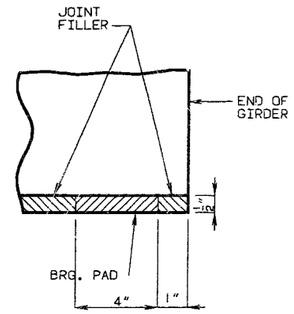

DETAIL "A"

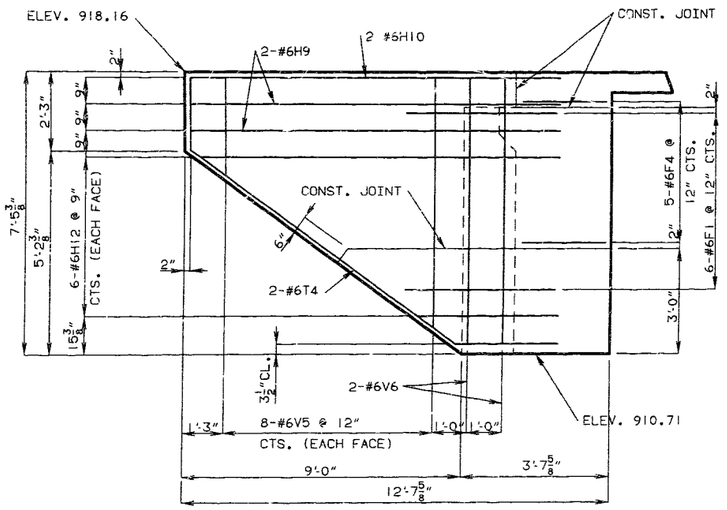

ELEVATION B-B

NOTE: FOR LOCATION OF ELEVATION A-A AND B-B SEE SHEET NO. 4.
FOR LOCATION OF SECTION C-C, D-D, E-E, F-F AND G-G SEE SHEET NO. 4.

NOTE: FOR DETAILS OF TIMBER HEADER SEE SHEET NO. 18.

DETAILS OF END BENT NO. 1

DETAILED DEC. 1990
CHECKED FEB. 1991

NOTE: THIS DRAWING IS NOT TO SCALE. FOLLOW DIMENSIONS.

157

STATE	PROJ. NO.	SHEET NO.
MO.		

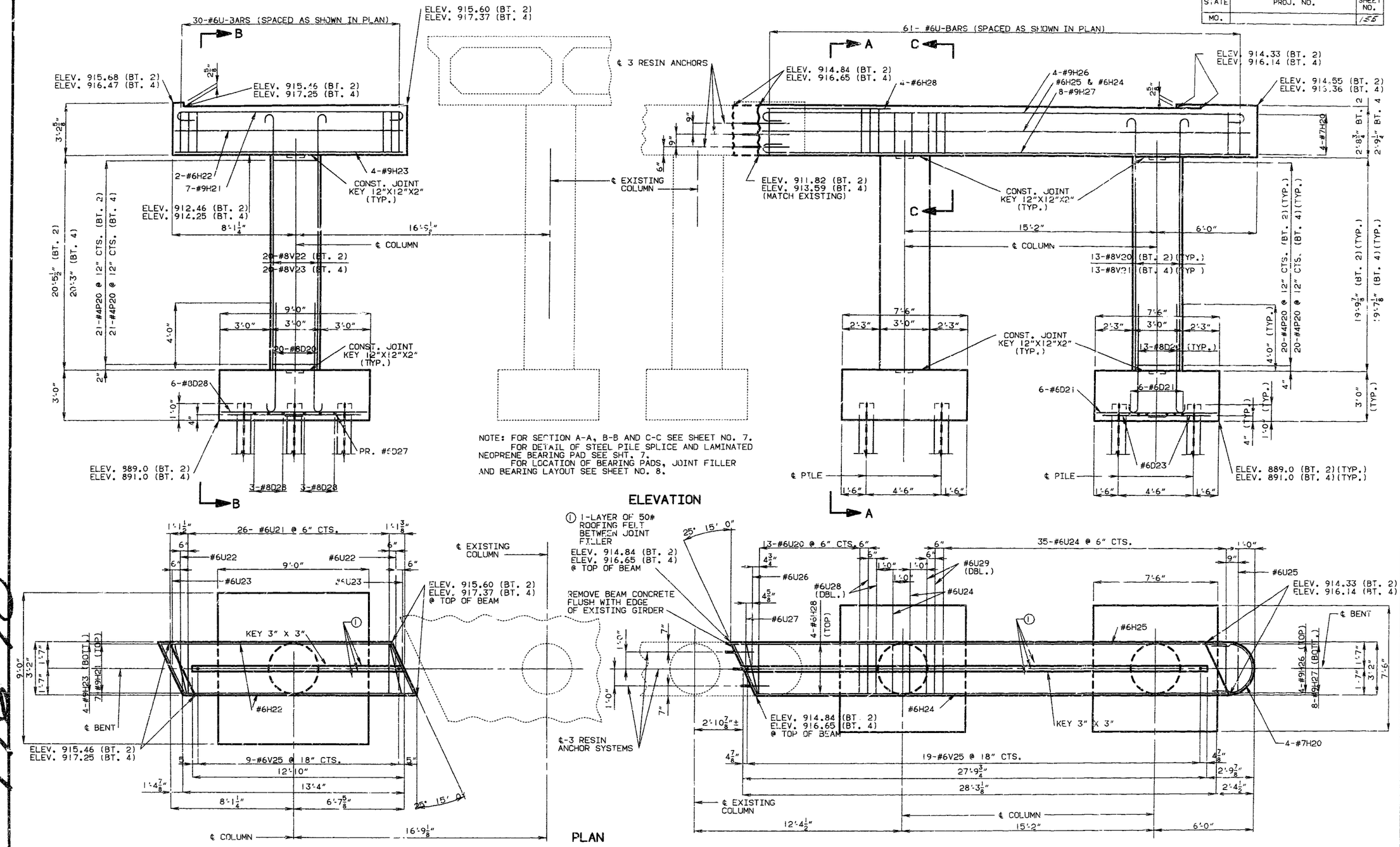

DETAILS OF INTERMEDIATE BENT NO. 2 & 4

DETAILED DEC. 1990
CHECKED JAN. 1991

NOTE: THIS DRAWING IS NOT TO SCALE. FOLLOW DIMENSIONS.

SHEET NO. 6 OF 26

JACKSON COUNTY A-1643R1

STATE	PROJ. NO.	SHEET NO.
MO.		156

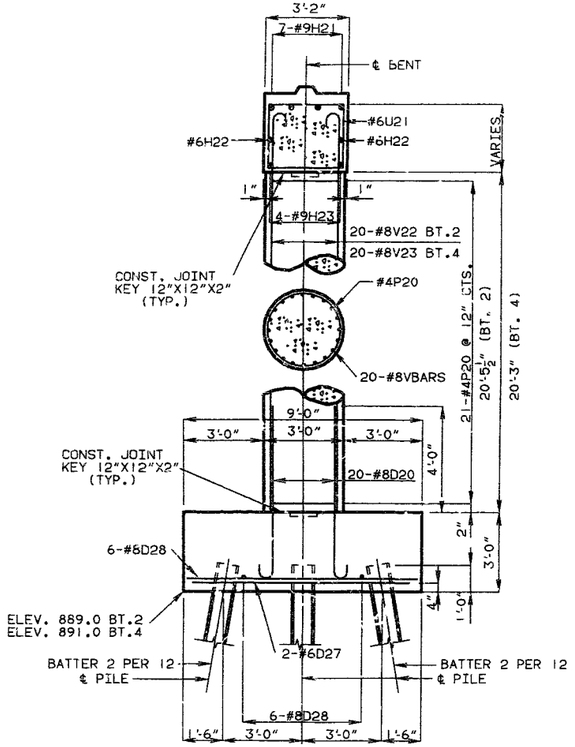

SECTION B-B

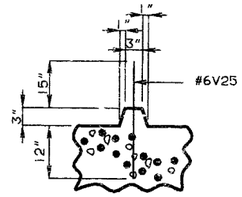

SECTION THRU KEY

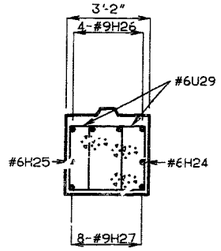

SECTION C-C

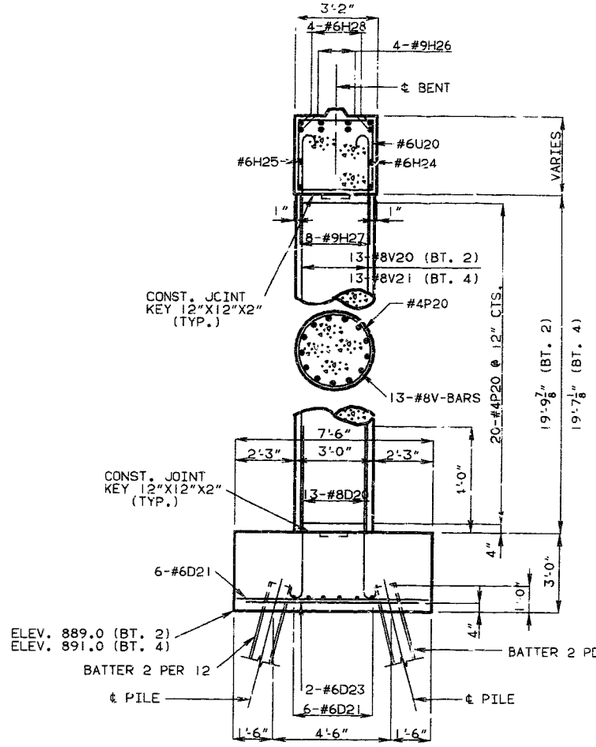

SECTION A-A

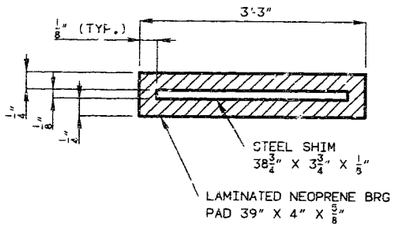

DETAILS OF LAMINATED NEOPRENE BEARING PAD

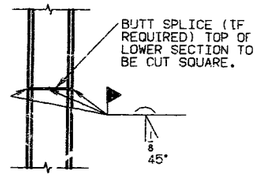

DETAIL OF STEEL PILE SPLICE

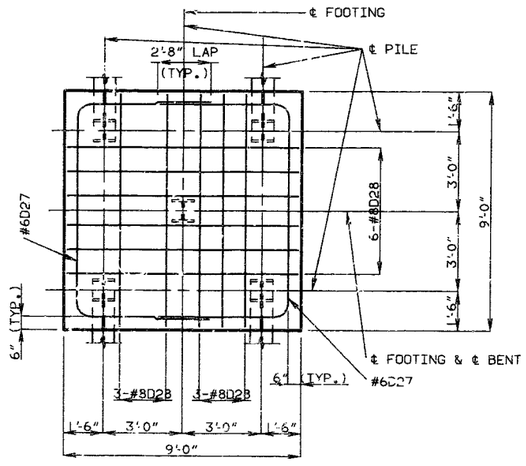

PLAN OF LEFT FOOTING

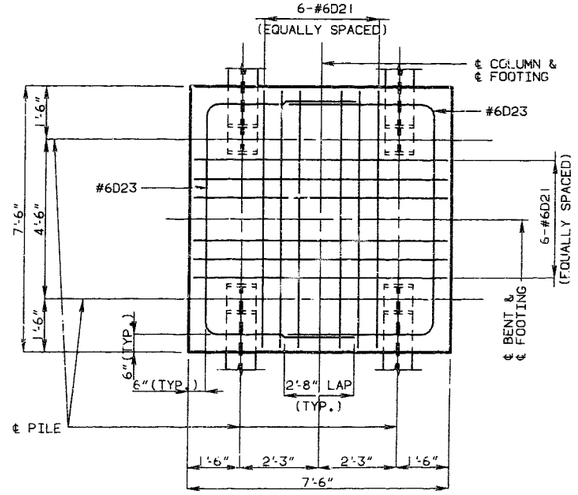

PLAN OF RIGHT FOOTINGS

DETAILS OF INTERMEDIATE BENT NO. 2 & 4

DETAILED DEC. 1990
CHECKED JAN. 1991

NOTE: THIS DRAWING IS NOT TO SCALE. FOLLOW DIMENSIONS.

STATE	PROJ. NO.	SHEET NO.
MO.		157

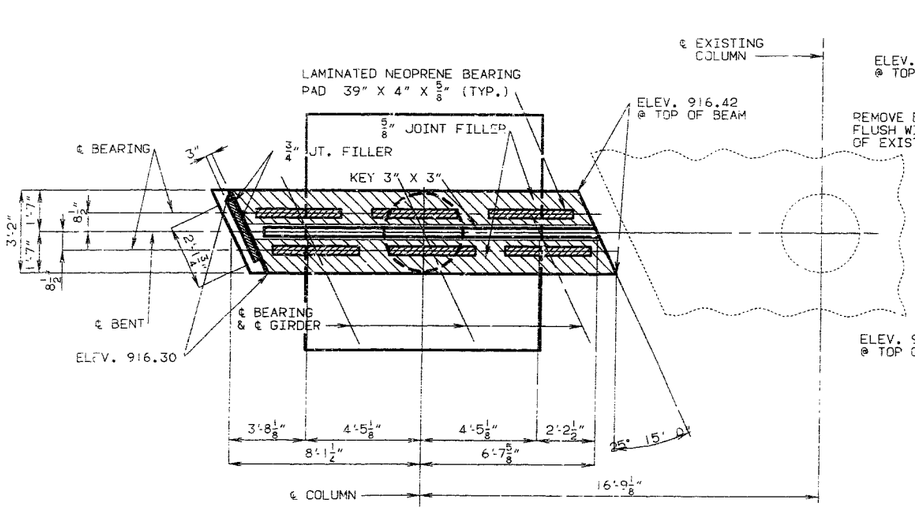

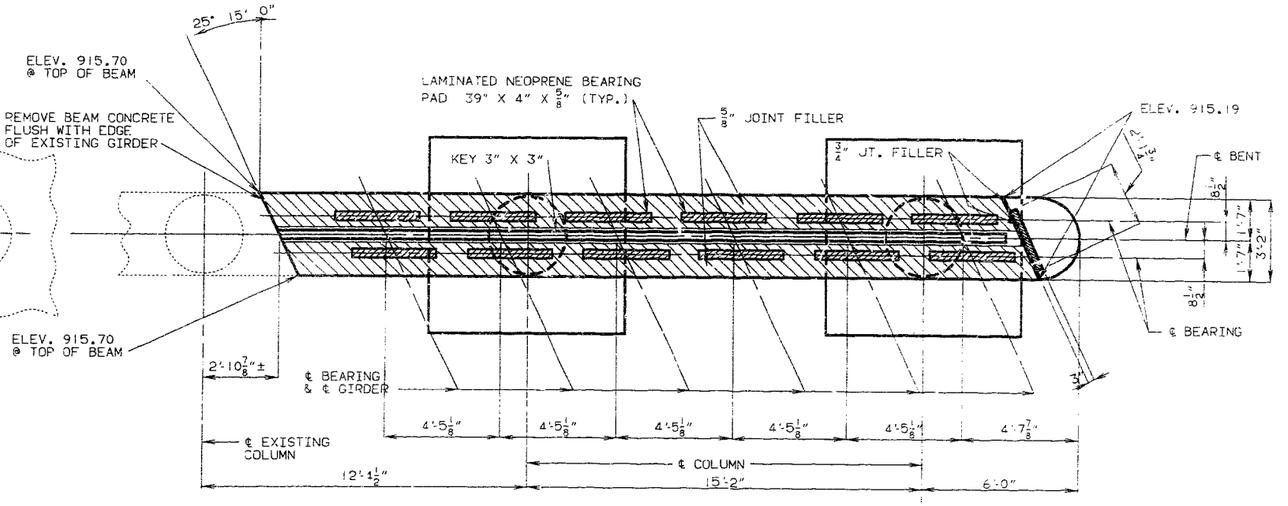

PLAN

DETAILS OF INT. BENT 3

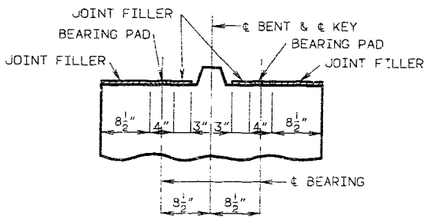

TYPICAL SECTION THRU BEAM

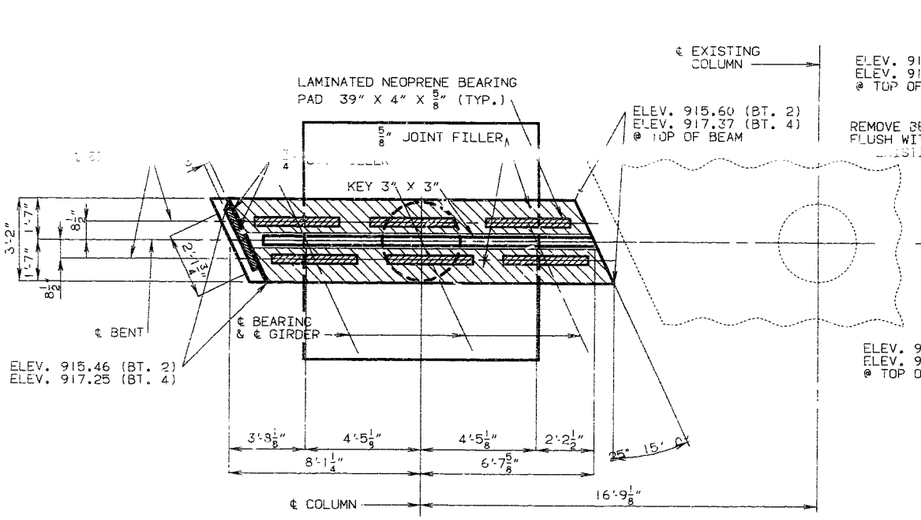

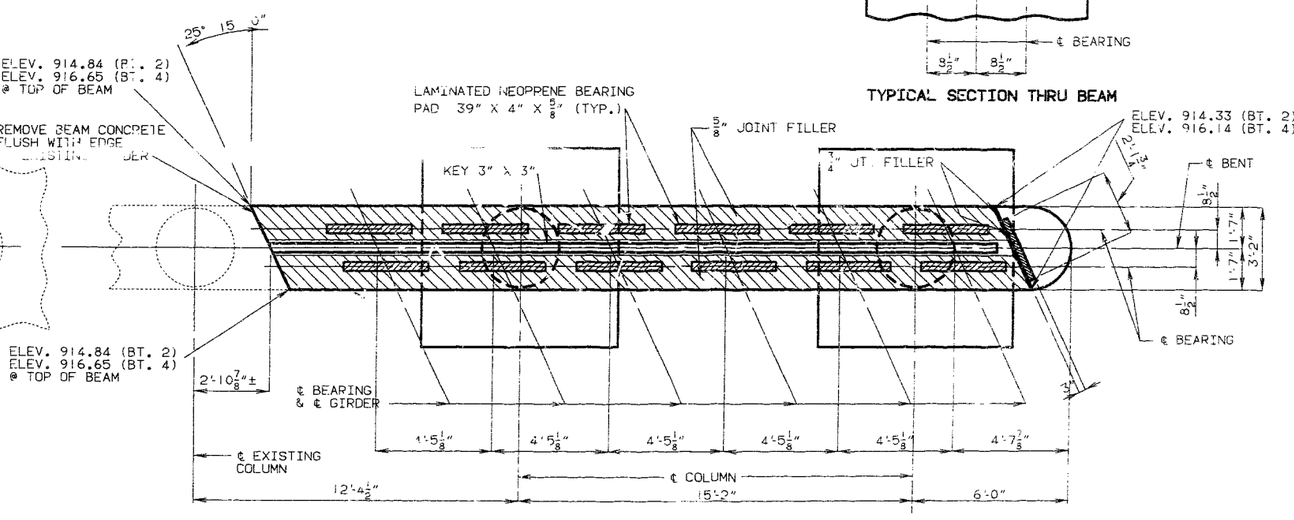

PLAN

DETAILS OF INT. BENTS 2 & 4

DETAILED FEB. 1991
CHECKED MAR. 1991

NOTE: THIS DRAWING IS NOT TO SCALE. FOLLOW DIMENSIONS.

STATE	PROJ. NO.	SHEET NO.
MO.		158

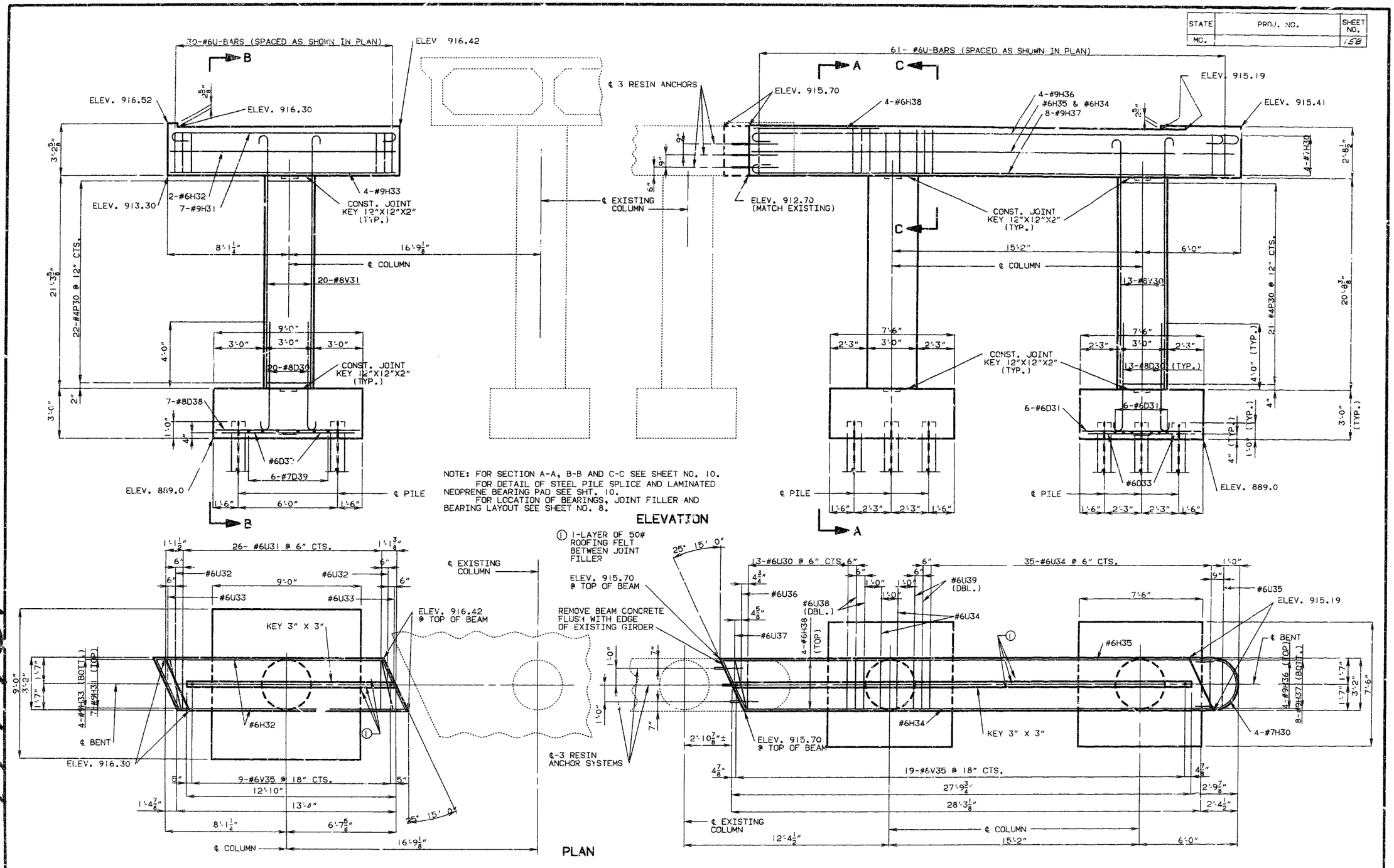

DETAILS OF INTERMEDIATE BENT NO. 3

DETAILED JAN. 1991
CHECKED FEB. 1991

NOTE: THIS DRAWING IS NOT TO SCALE. FOLLOW DIMENSIONS.

STATE	PROJ. NO.	SHEET NO.
MO.		159

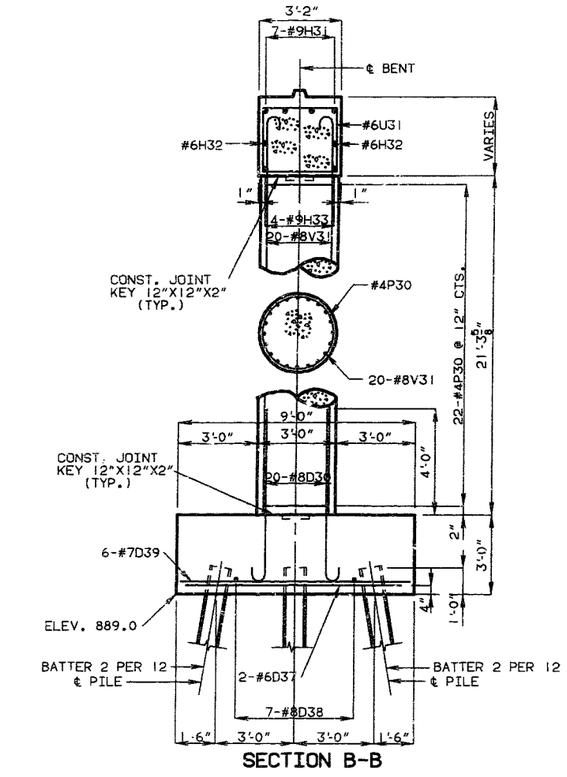

SECTION B-B

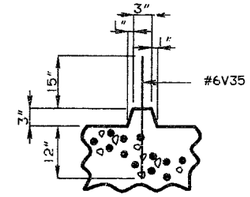

SECTION THRU KEY

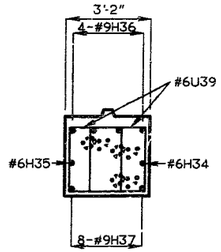

SECTION C-C

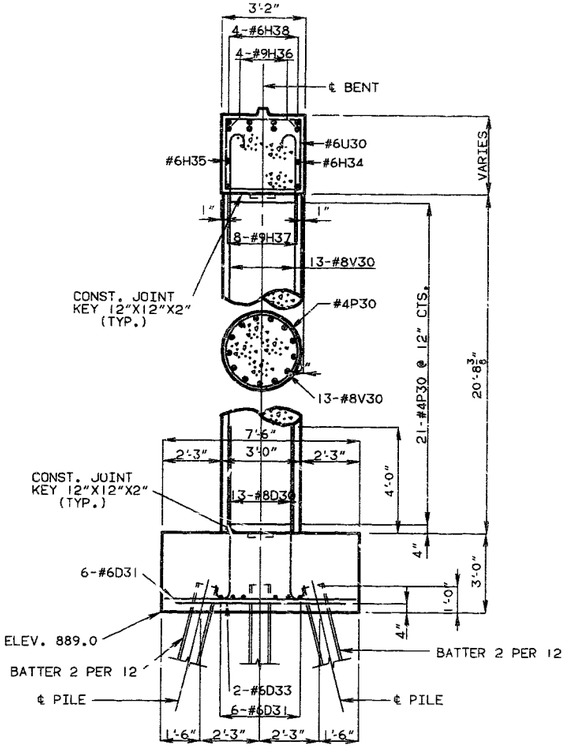

SECTION A-A

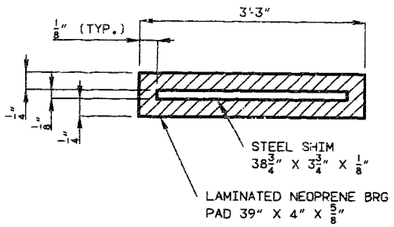

DETAILS OF LAMINATED NEOPRENE BEARING PAD

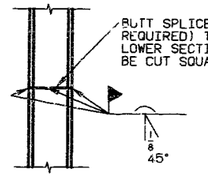

DETAIL OF STEEL PILE SPLICE

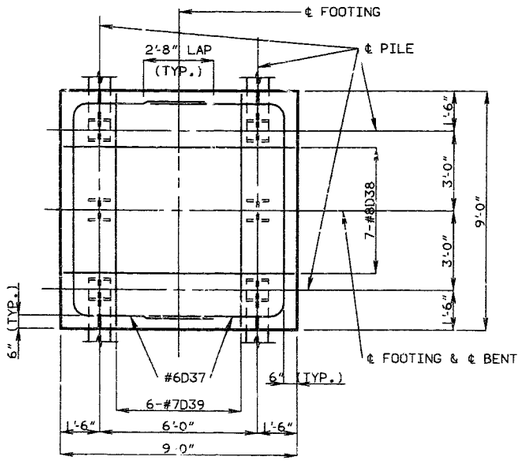

PLAN OF LEFT FOOTING

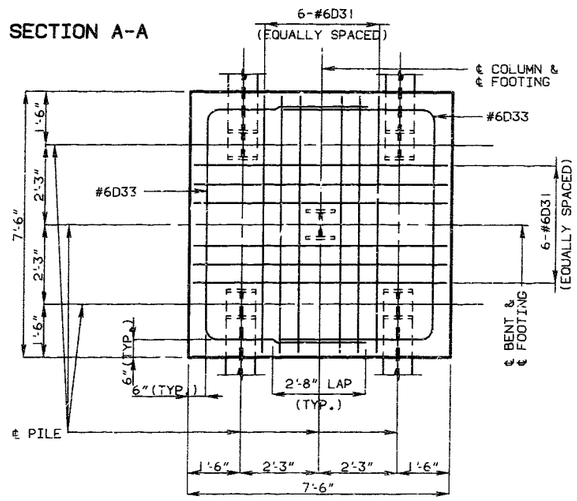

PLAN OF RIGHT FOOTINGS

DETAILS OF INTERMEDIATE BENT NO. 3

DETAILED JAN. 1991
CHECKED FEB. 1991

NOTE: THIS DRAWING IS NOT TO SCALE. FOLLOW DIMENSIONS.

STATE	PROJ. NO.	SHEET NO.
MO.		

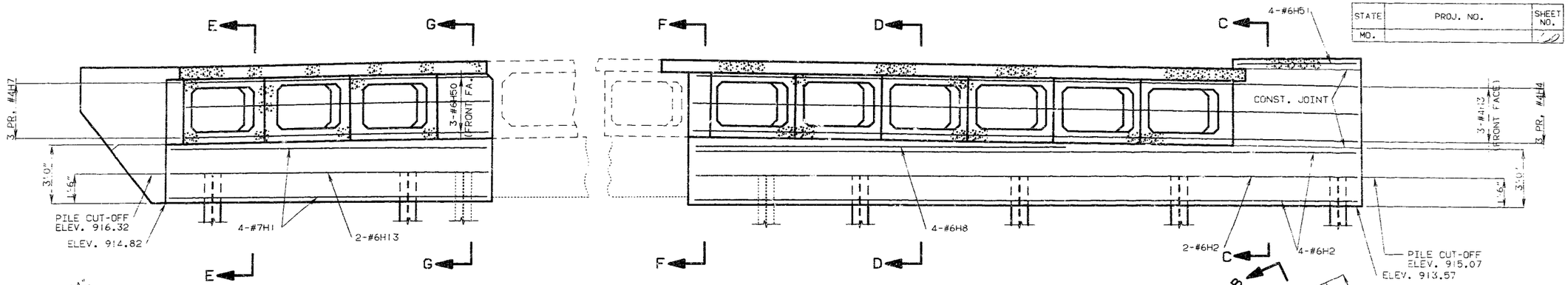

SECTION NEAR END BENT

NOTE: PLACE ALL U-BARS AND V-BARS PARALLEL TO ℄ ROADWAY.
FOR DETAILS OF STEEL PILE SPLICE SEE SHEET NO. 10.
BEND F-BARS IN FIELD TO CLEAR GIRDERS.
FOR SECTION C-C,D-D,E-E,F-F AND G-G SEE SHEET NO. 12 .
FOR ELEVATION A-A AND B-B SEE SHEET NO. 12 .

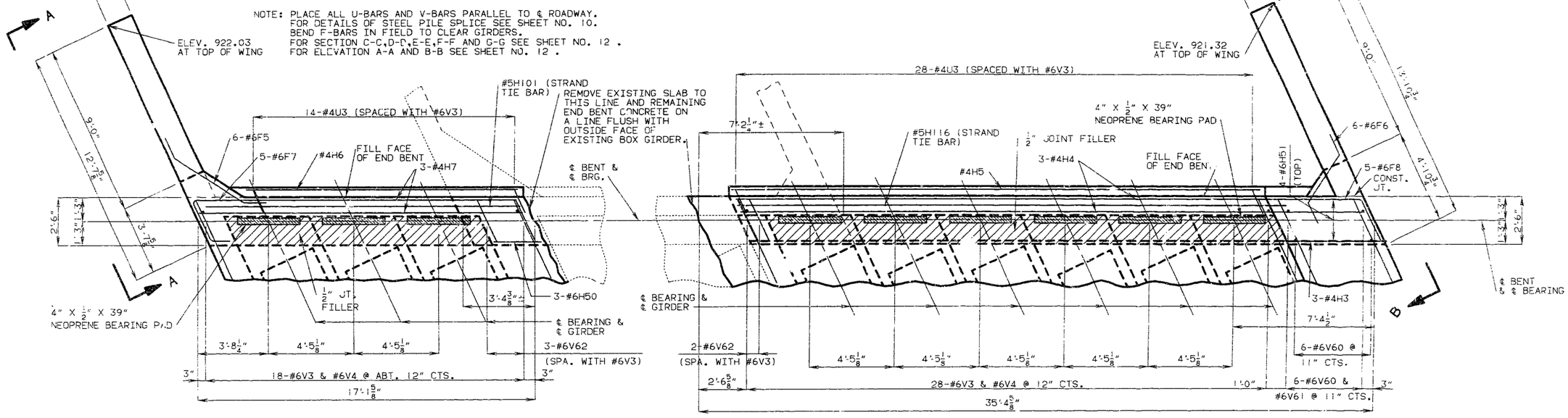

PLAN

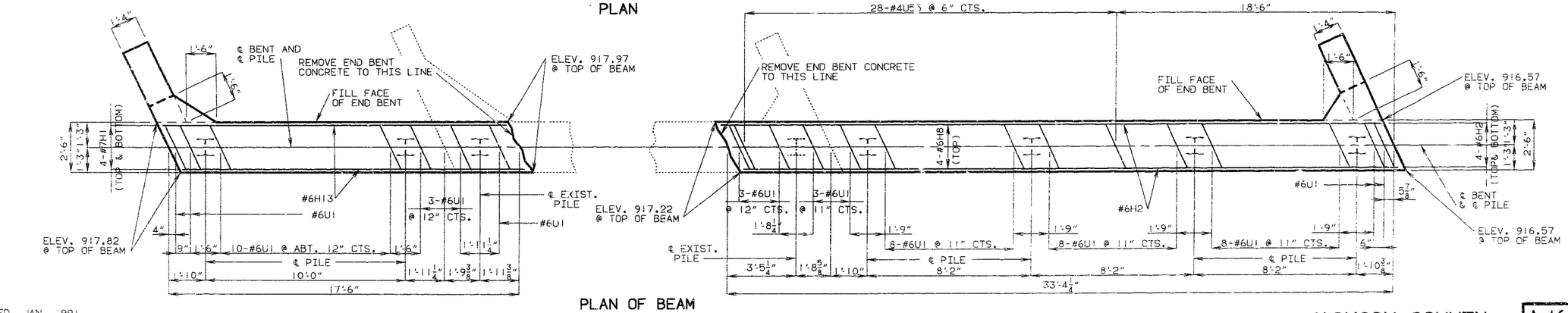

PLAN OF BEAM

DETAILED JAN. 1991
CHECKED MAR. 1991

NOTE: THIS DRAWING IS NOT TO SCALE. FOLLOW DIMENSIONS. **DETAILS OF END BENT NO. 5**

SHEET NO. 11 OF 26

JACKSON COUNTY

A-1643R1

2163

STATE	PROJ. NO.	SHEET NO.
MO.		1111

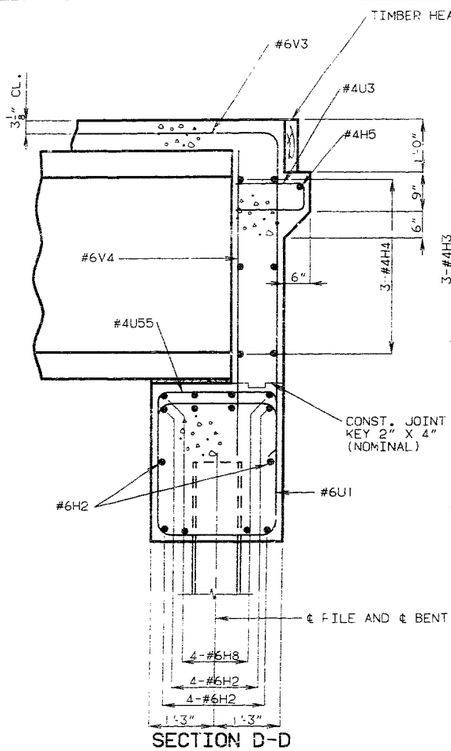

SECTION D-D

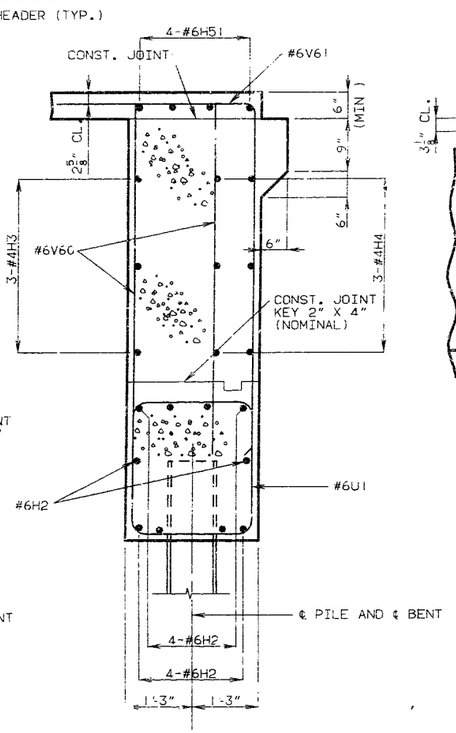

SECTION C-C

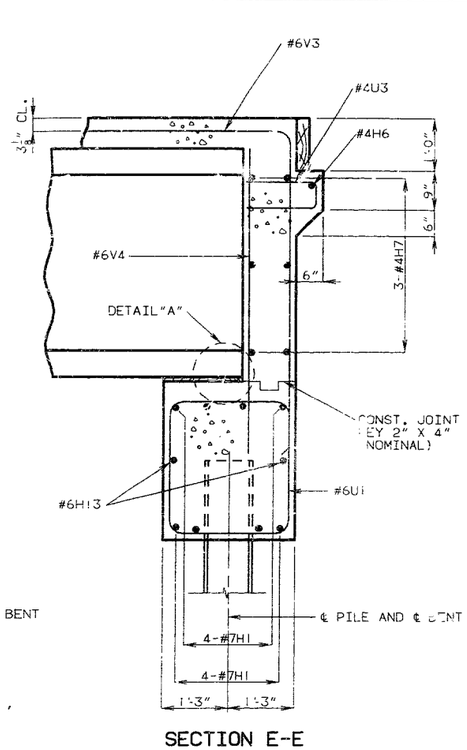

SECTION E-E

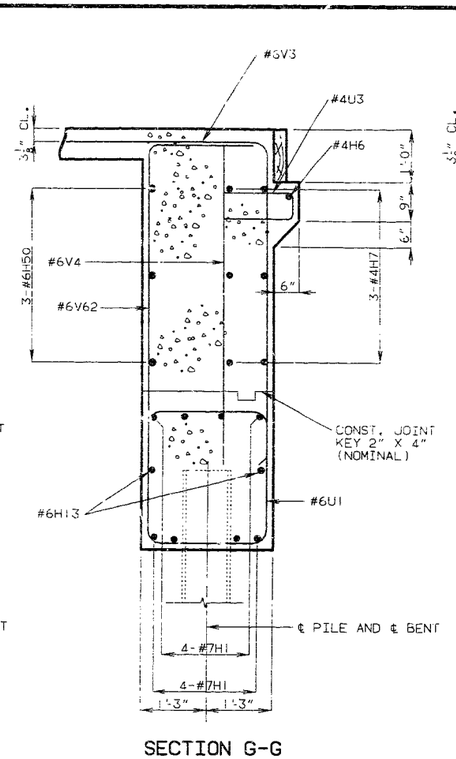

SECTION G-G

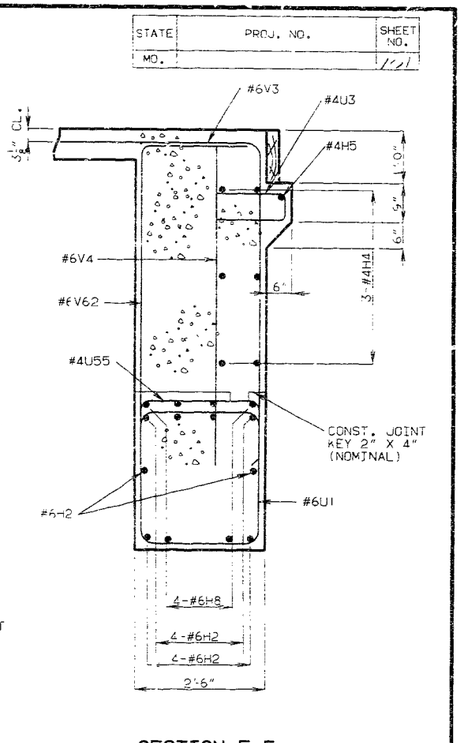

SECTION F-F

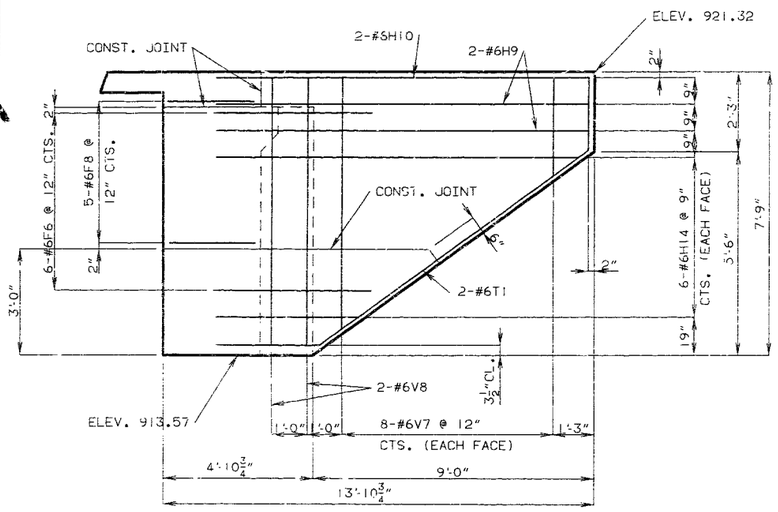

ELEVATION B-B

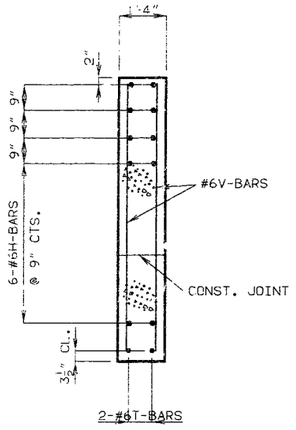

SECTION THRU WINGS

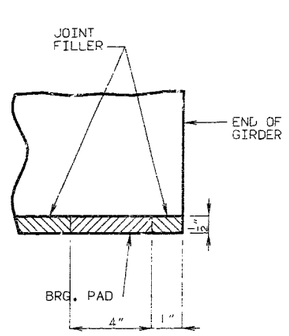

DETAIL "A"

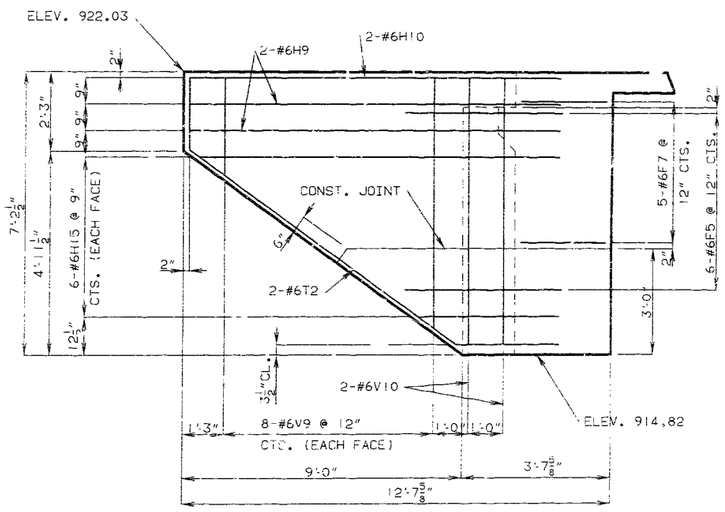

ELEVATION A-A

NOTE: FOR LOCATION OF ELEVATION A-A AND B-B SEE SHEET NO. 11.
FOR LOCATION OF SECTIONS C-C, D-D, E-E, F-F AND G-G SEE SHEET NO. 11.

NOTE: FOR DETAILS OF TIMBER HEADER SEE SHEET NO. 18.

DETAILS OF END BENT NO. 5

DETAILED DEC. 1990
CHECKED MAR. 1991

NOTE: THIS DRAWING IS NOT TO SCALE. FOLLOW DIMENSIONS.

JACKSON COUNTY A-1643P1

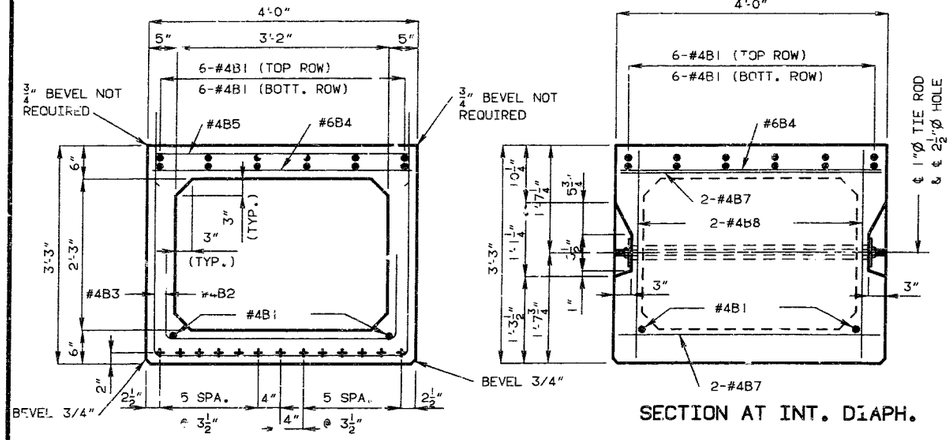

TYPICAL SECTION THRU BOX GIRDER

SECTION AT INT. DIAPH.

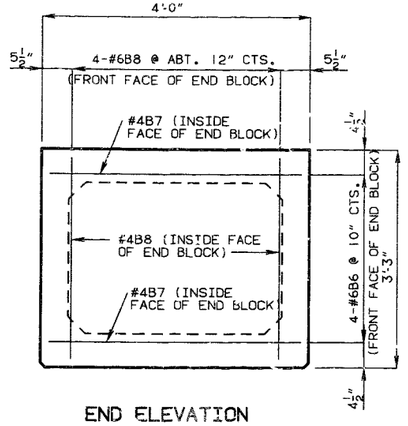

END ELEVATION

NOTE: CONCRETE FOR PRESTRESSED GIRDERS SHALL BE CLASS A1 WITH F'C = 5000 PSI

(+) INDICATES PRESTRESSING STRANDS.

USE 13 STRANDS WITH AN INITIAL PRESTRESS FORCE OF 403 KIPS.

PRESTRESSING STRANDS SHALL BE UNCOATED SEVEN WIRE LOW RELAXATION STRANDS, 1/2" DIAMETER CONFORMING TO A.A.S.H.T.O. M203, GRADE 270, SEE SEC. 705.4.8.

MINIMUM CLEARANCE TO REINFORCING STEEL SHALL BE 1 1/2" UNLESS OTHERWISE NOTED.

FOR FIELD BENDING OF #4B3 SEE SHT. 16.

STATE	PROJ. NO.	SHEET NO.
MO.		

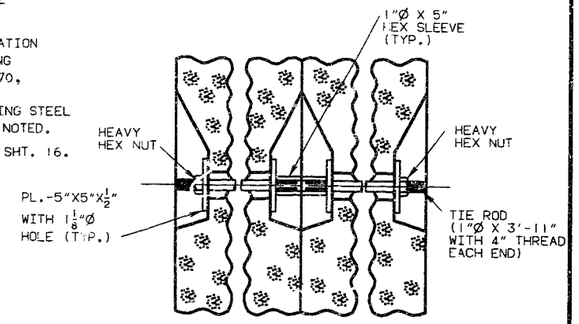

EXTERIOR GIRDER INTERIOR GIRDER

PART SECTION NEAR 1"Ø TIE ROD

NOTE: COST OF FURNISHING 1"Ø TIE ROD ASSEMBLIES IS INCLUDED IN PRICE BID FOR OTHER ITEMS.
1"Ø TIE RODS, SLEEVES, PLATES AND NUTS SHALL BE GALVANIZED.
1"Ø TIE RODS, SLEEVES AND NUTS SHALL BE A-307.
PLATES SHALL BE A-36.

FOR COMPLETE BILL OF REINFORCING STEEL SEE SHT. 15.

FOR STRAND DETAILS AT GIRDER ENDS, TYPICAL SECTION THRU BOX GIRDER & PART PLAN OF INT. DIAPH. SHOWING TIE ROD LOCATION SEE SHT. 16.

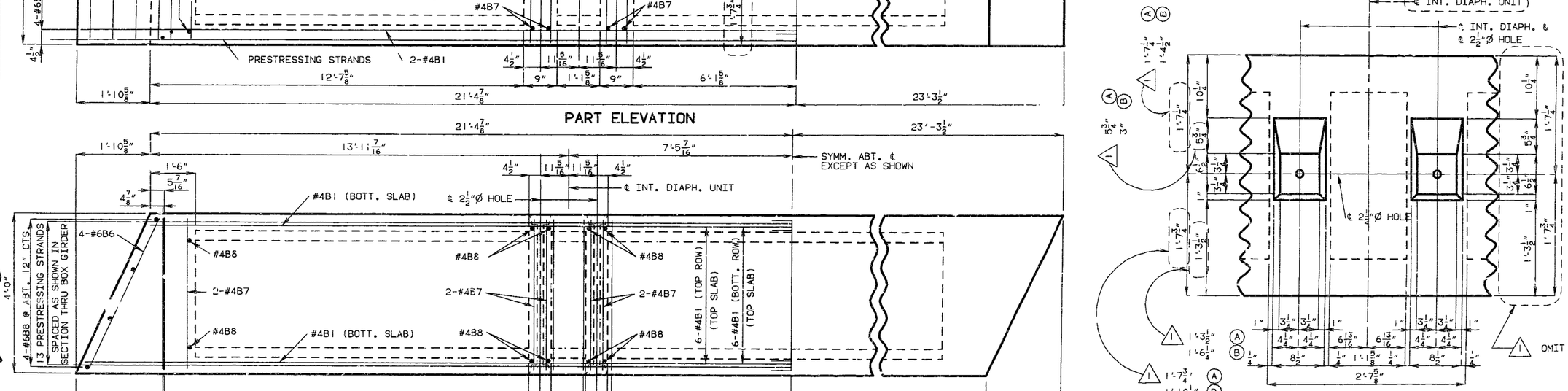

PART ELEVATION

PART PLAN

PART ELEVATION OF INT. DIAPH. UNITS

DETAILS OF BOX GIRDER SPAN (1-2)&(5-4)

DETAILED DEC. 1990
CHECKED FEB. 1991

NOTE: THIS DRAWING IS NOT TO SCALE. FOLLOW DIMENSIONS.

SHEET NO. 13 OF 26

1 REVISED 7-22-91

JACKSON COUNTY A-1643R1

STATE	PROJ. NO.	SHEET NO.
MO.		

NOTE: CONCRETE FOR PRESTRESSED GIRDERS SHALL BE CLASS A1 WITH F'C = 5000 PSI

(+) INDICATES PRESTRESSING STRANDS.

USE 30 STRANDS WITH AN INITIAL PRESTRESS FORCE OF 930 KIPS.

PRESTRESSING STRANDS SHALL BE UNCOATED SEVEN WIRE LOW RELAXATION STRANDS, $\frac{1}{2}$" DIAMETER CONFORMING TO A.A.S.H.T.O. M203, GRADE 270 SEE SEC. 705.4.8.

MINIMUM CLEARANCE TO REINFORCING STEEL SHALL BE $1\frac{1}{2}$" UNLESS OTHERWISE NOTED.

FOR PART SECTION NEAR 1"Ø TIE RODS AND PART ELEVATION OF INT. DIAPH. UNITS SEE SHT. 16. △1 13

FOR COMPLETE BILL OF REINFORCING STEEL SEE SHT. 15.

FOR STRAND DETAILS AT GIRDER ENDS, TYPICAL SECTION THRU BOX GIRDER & PART PLAN OF INT. DIAPH. SHOWING TIE ROD LOCATION, SEE SHT. 16.

FOR FIELD BENDING OF #4B3 SEE SHT. 16.

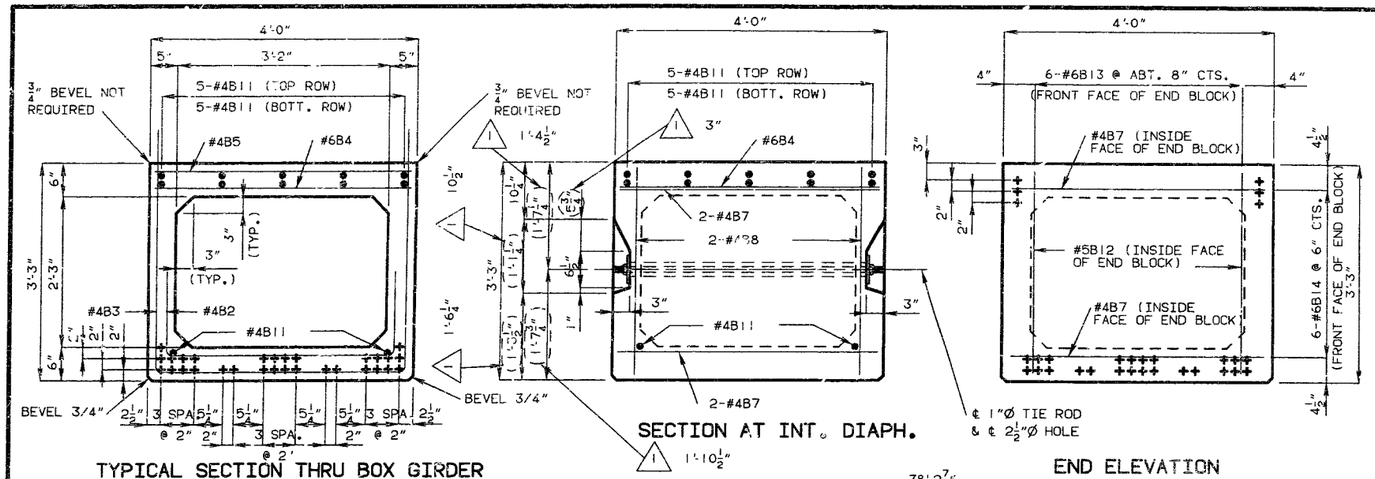

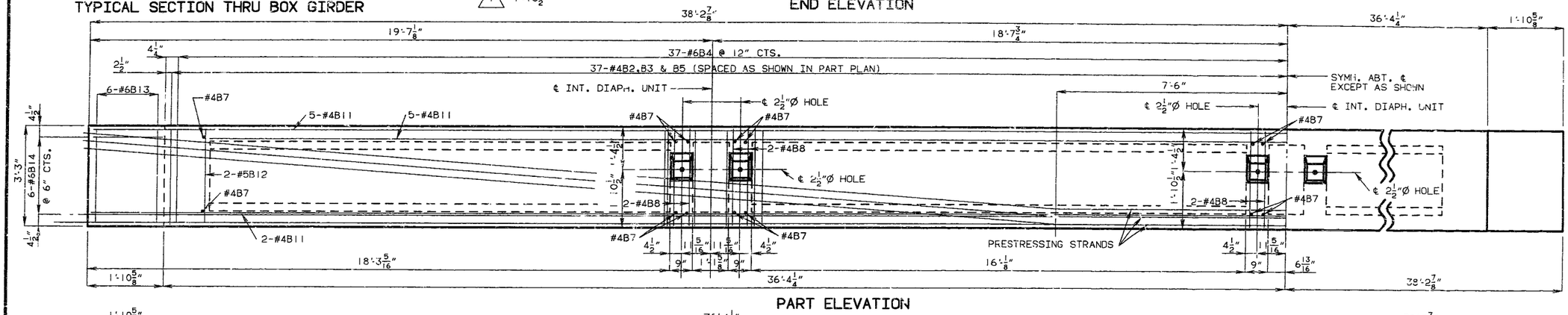

DETAILED DEC. 1990
CHECKED FEB. 1991

NOTE: THIS DRAWING IS NOT TO SCALE. FOLLOW DIMENSIONS.

DETAILS OF BOX GIRDER - (SPAN (2-3) & (4-3)

SHEET NO. 14 OF 26 △1 REVISED 7-22-91

JACKSON COUNTY A-1643R1

COMPLETE BILL OF REINFORCING STEEL - EACH BOX GIRDER

NO. REQ'D.	MARK NO. SIZE MARK	LOCATION	GRADE 60 (H)	SHAPE NO.	STIRRUP (S)	SUBSTR. (X)	VARIES (V)	NO. EACH	DIMENSIONS B FT. IN.	C FT. IN.	D FT. IN.	E FT. IN.	F FT. IN.	H FT. IN.	K FT. IN.	NOMINAL LENGTH FT. IN.	ACTUAL LENGTH FT. IN.	WEIGHT LBS.
28	4B1	BOX GIRDER	H	20					23 1.000							23 1	23 1	432
43	4B2	BOX GIRDER	H	10	S					22.000	3 6.000					7 3	7 1	203
83	4B3	BOX GIRDER	H	10	S					4 2.000	3 9.000					12 1	11 11	343
43	6B4	BOX GIRDER	H	20					3 9.000							3 9	3 9	242
43	4B5	BOX GIRDER	H	10	S					20.000	3 9.000					7 1	6 11	199
8	6B6	BOX GIRDER	H	20					4 2.000							4 2	4 2	56
20	4B7	BOX GIRDER	H	20					3 9.000							3 9	3 9	50
28	6B8	BOX GIRDER	H	20					3 0.000							3 0	3 0	126

SPAN (1-2) & (5-4)

COMPLETE BILL OF REINFORCING STEEL - EACH BOX GIRDER

NO. REQ'D.	MARK NO. SIZE MARK	LOCATION	GRADE 60 (H)	SHAPE NO.	STIRRUP (S)	SUBSTR. (X)	VARIES (V)	NO. EACH	DIMENSIONS B FT. IN.	C FT. IN.	D FT. IN.	E FT. IN.	F FT. IN.	H FT. IN.	K FT. IN.	NOMINAL LENGTH FT. IN.	ACTUAL LENGTH FT. IN.	WEIGHT LBS.
73	4B2	BOX GIRDER	H	10	S					22.500	3 6.000					7 3	7 1	345
73	4B3	BOX GIRDER	H	10	S					4 2.000	3 9.000					12 1	11 11	581
73	6B4	BOX GIRDER	H	20					3 9.000							3 9	3 9	411
73	4B5	BOX GIRDER	H	10	S					20.000	3 9.000					7 1	6 11	337
28	4B7	BOX GIRDER	H	20					3 9.000							3 9	3 9	70
24	4B8	BOX GIRDER	H	20					3 0.000							3 0	3 0	48
24	4B11	BOX GIRDER	H	20					38 0.000							38 0	38 0	609
4	5B12	BOX GIRDER	H	20					3 0.000							3 0	3 0	13
12	6B13	BOX GIRDER	H	20					3 0.000							3 0	3 0	54
12	6B14	BOX GIRDER	H	20					4 2.000							4 2	4 2	75

SPAN (2-3) & (4-3)

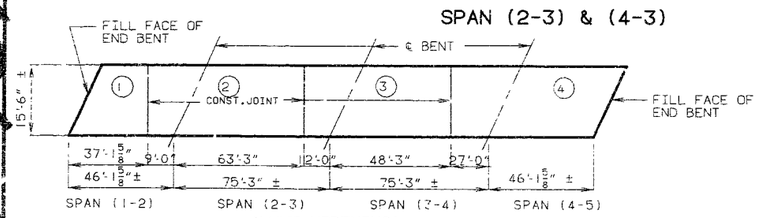

(LEFT WIDENING)

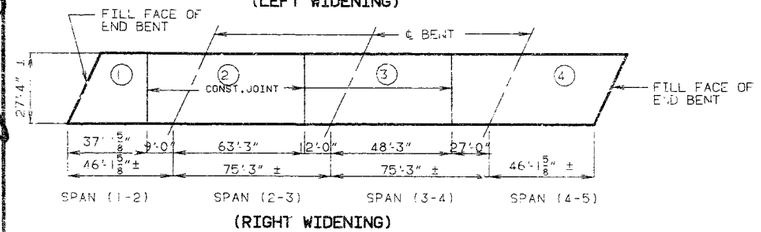

(RIGHT WIDENING)

SLAB POURING SEQUENCE

	SEQUENCE OF POURS DIRECTION 1	2	3	4	MINIMUM RATE OF POUR (CUBIC YARDS PER HOUR) WITH RETARDER
BASIC SEQUENCE	END TO 2	1 TO 3	2 TO 4	3 TO END	25
ALTERNATE POURS TO THE BASIC SEQUENCE ARE SUBJECT TO THE APPROVAL OF THE ENGINEER IN ACCORDANCE WITH SECTION 703.3.12.4 OF MISSOURI STANDARD SPECIFICATIONS.					
ALTERNATE "A" POUPS	1 + 2 END TO 3		3 2 TO 4	4 3 TO END	25
ALTERNATE "B" POURS	1 + 2 END TO 3		3 + 4 2 TO END		25
ALTERNATE "C" POURS	1 + 2 + 3 + 4 END TO END				25

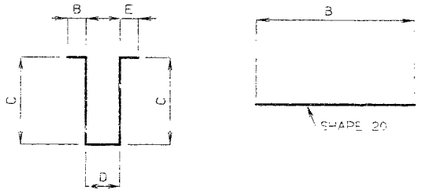

SHAPE 10

NOTE: ALL REINFORCEMENT SHALL BE GRADE 60.

ALL STANDARD HOOKS AND BENDS OTHER THAN 180 DEG. TO BE BENT WITH SAME PROCEDURE AS FOR 90 DEG. STANDARD HOOK.

HOOKS AND BENDS SHALL BE IN ACCORDANCE WITH THE PROCEDURES AS SHOWN ON THIS SHEET.

NOMINAL LENGTHS ARE BASED ON OUT TO OUT DIMENSIONS SHOWN IN BENDING DIAGRAMS AND ARE LISTED FOR FABRICATORS USE.

S = STIRRUP

ACTUAL LENGTHS ARE MEASURED ALONG CENTERLINE BAR TO THE NEAREST INCH.

WEIGHTS ARE BASED ON ACTUAL LENGTHS.

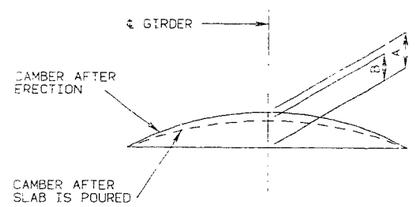

GIRDER CAMBER DIAGRAM

CONVERSION FACTOR FOR GIRDER CAMBER
0.25 FT. = 0.7125 X 0.5 FT.

TABLE OF DIMENSIONS SPAN	A	B
(1-2)	7/16"	3/8"
(2-3)	1 13/16"	1 3/8"
(3-4)	1 13/16"	1 3/8"
(4-5)	7/16"	3/8"

STATE	PROJ. NO.	SHEET NO.
MO.		14

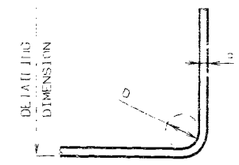

#4 : D = 2"
#5 : D = 2 1/2"

90° STIRRUP BEND

SPAN (1-2)	8"	7 3/4"	7 5/8"	7 3/4"	8"
SPAN (2-3)	8 1/4"	7 5/8"	7"	7 1/2"	8 1/2"
SPAN (3-4)	8 3/4"	7 5/8"	7"	7 5/8"	8 1/2"
SPAN (4-5)	8 1/4"	7 15/16"	7 7/8"	8"	8 1/4"

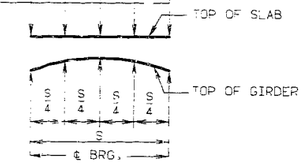

RIGHT SIDE

SPAN (1-2)	9"	8 5/8"	8 5/8"	8 3/4"	9"
SPAN (2-3)	9 3/16"	8 5/8"	8"	8 1/2"	9 3/16"
SPAN (3-4)	9 3/16"	8 5/8"	8"	8 1/2"	9 3/16"
SPAN (4-5)	9 3/16"	8 15/16"	8 7/8"	8 15/16"	9 3/16"

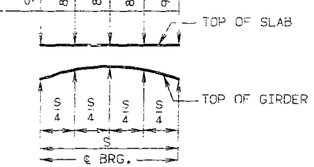

LEFT SIDE

THEORETICAL SLAB THICKNESS DIAGRAM

NOTE: SLAB TO BE BUILT PARALLEL TO GRADE AND TO A MINIMUM THICKNESS OF 7" ON RIGHT SIDE AND 8" ON LEFT SIDE.

IF GIRDER CAMBER IS DIFFERENT FROM THAT SHOWN IN THE CAMBER DIAGRAM, IT SHALL BE NECESSARY TO INCREASE THE SLAB THICKNESS OR TO RAISE THE GRADE UNIFORMLY THROUGHOUT THE STRUCTURE. NO PAYMENT WILL BE MADE FOR ADDITIONAL LABOR OR MATERIALS REQUIRED FOR VARIATION IN SLAB THICKNESS OR GRADE ADJUSTMENT.

CONCRETE IN SLAB IS INCLUDED IN THE ESTIMATED QUANTITIES AS CLASS B2 CONCRETE.

THE DIAPHRAGM AT THE INTERMEDIATE AND END BENTS SHALL BE POURED A MINIMUM OF 30 MINUTES AND A MAXIMUM OF 2 HOURS BEFORE THE SLAB IS POURED ACROSS THE DIAPHRAGM AT BENTS.

THE CONTRACTOR SHALL FURNISH AN APPROVED RETARDER TO RETARD THE SET OF THE CONCRETE TO 2.5 HOURS AND SHALL POUR AND SATISFACTORILY FINISH THE SLAB POURS AT NOT LESS THAN 25 CUBIC YARDS PER HOUR.

DETAILED SEPT 1990
CHECKED FEB. 1991

NOTE: THIS DRAWING IS NOT TO SCALE. FOLLOW DIMENSIONS.

STATE	PROJ. NO.	SHEET NO.
MO.		165

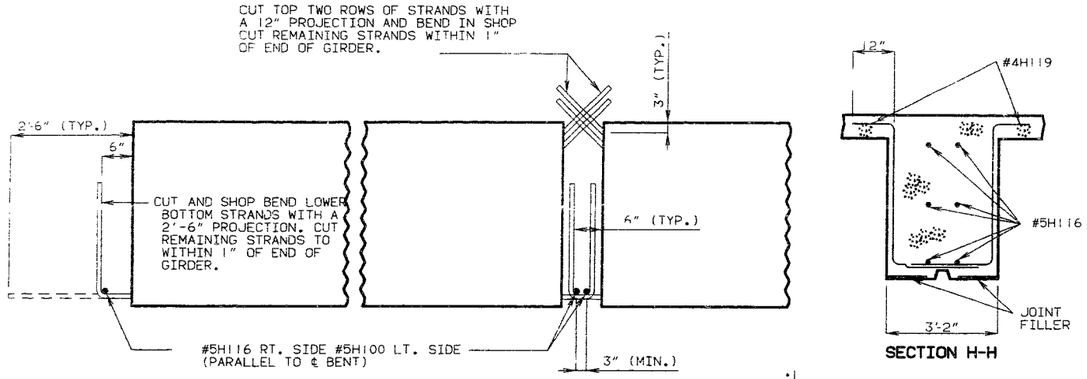

STRAND DETAILS AT GIRDER ENDS

SECTION H-H

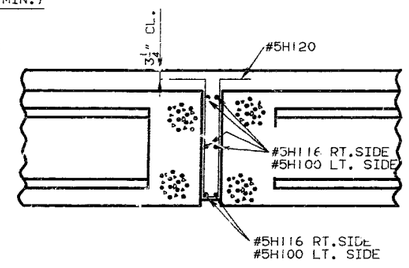

SECTION B-B
(SECTION D-D SIMILAR)

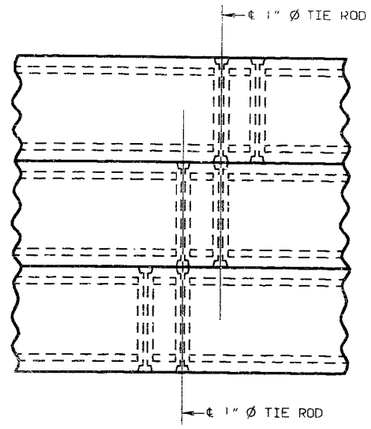

PART PLAN OF INT. DIAPH.
SHOWING TIE ROD LOCATION

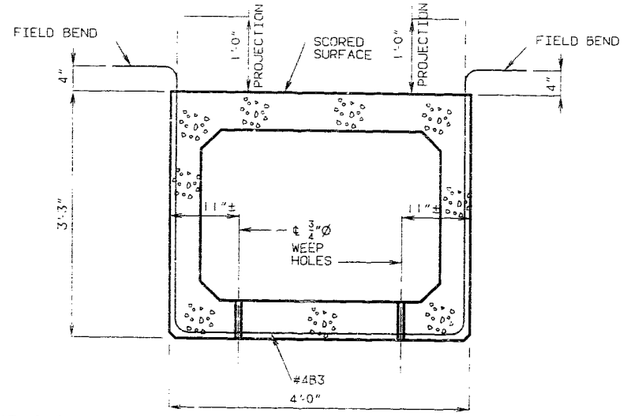

TYPICAL SECTION THRU BOX GIRDER

NOTE: TWO ¾"Ø WEEP HOLES SHALL BE PROVIDED AT LOWER END OF EACH VOID. THEY SHALL EXTEND THRU FORMS AND BE KEPT OPEN AT ALL TIMES. ¾"Ø WEEP HOLES TO BE CENTERED BETWEEN PRESTRESSED STRANDS.

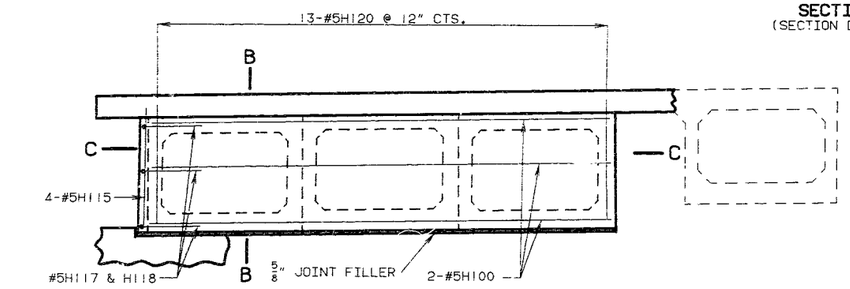

SECTION THRU DIAPH. AT INT. BENTS

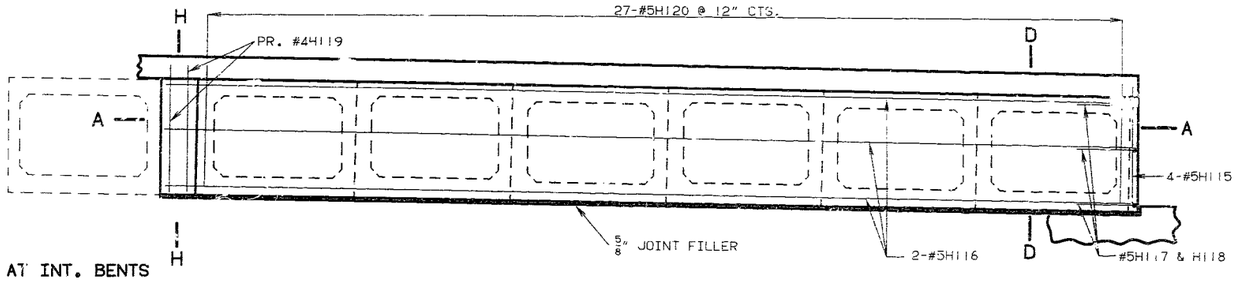

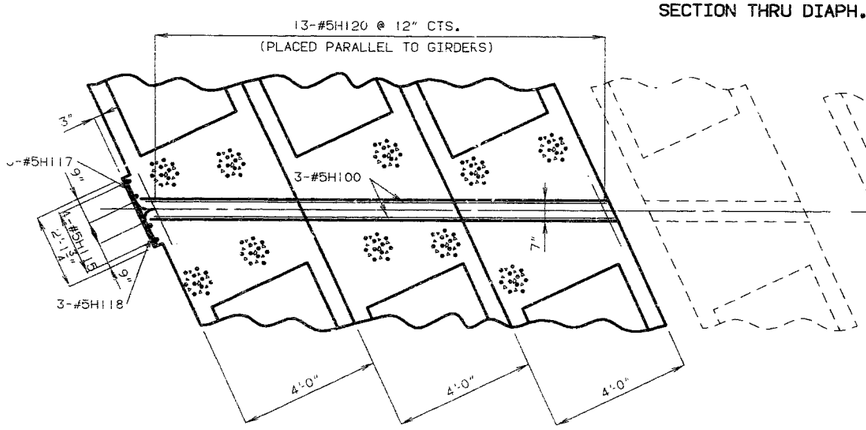

SECTION C-C

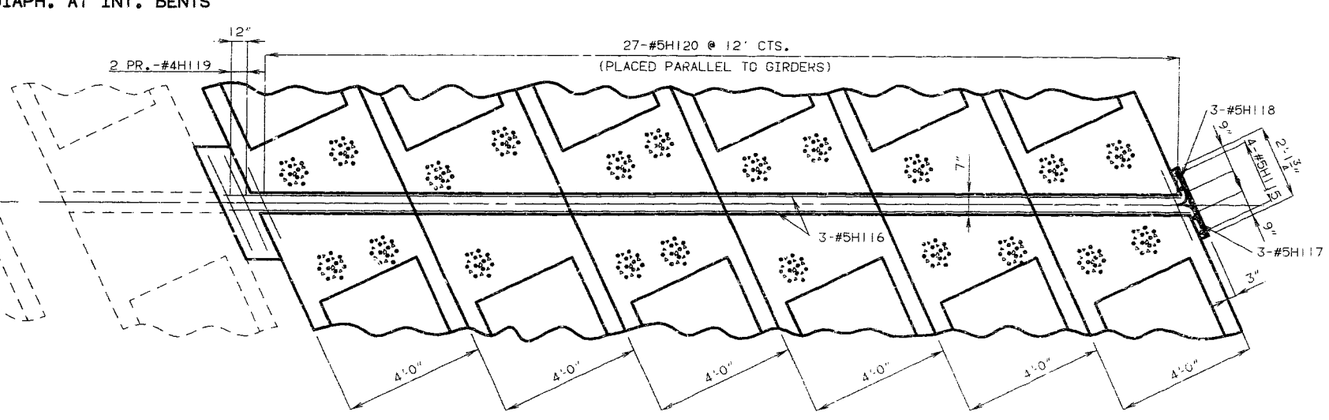

SECTION A-A

DETAILED JAN. 1991
CHECKED MAR. 1991

NOTE: THIS DRAWING IS NOT TO SCALE. FOLLOW DIMENSIONS.

STATE	PROJ. NO.	SHEET NO.
MO.		106

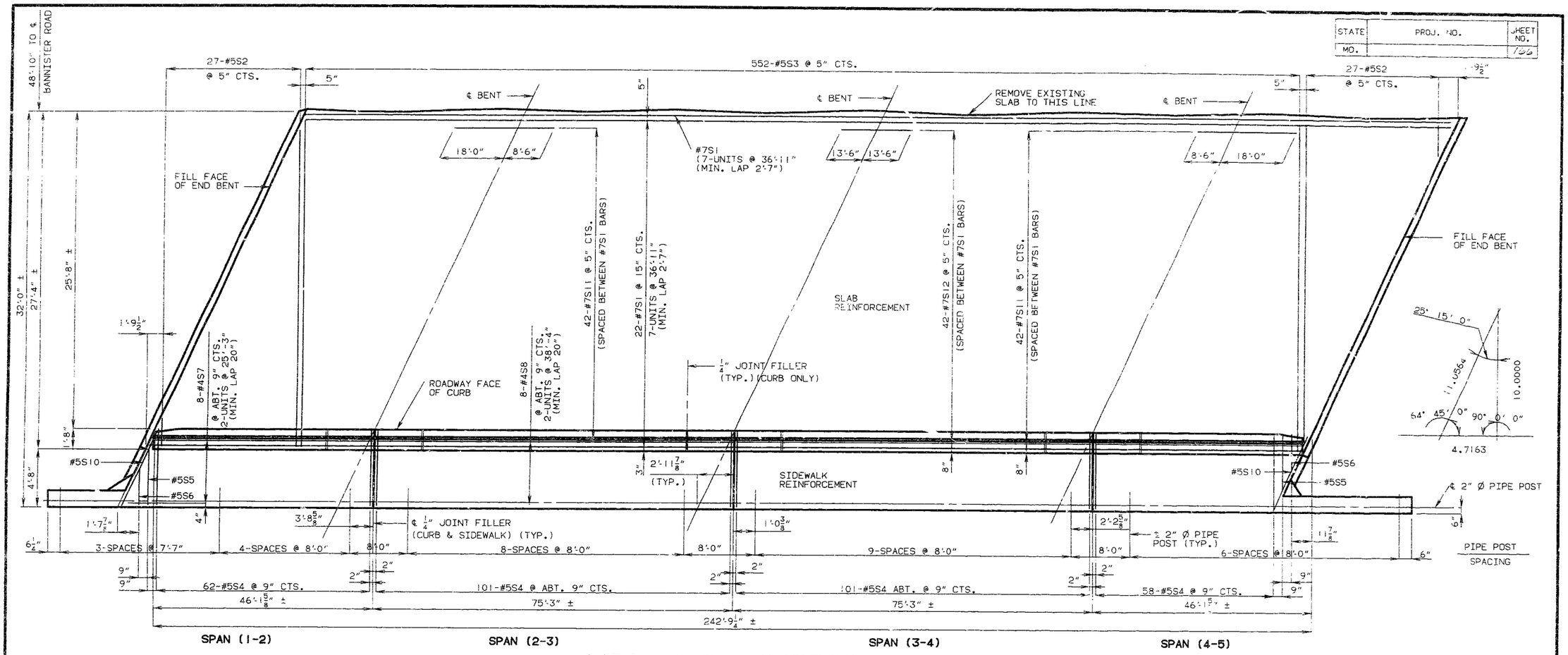

PART PLAN OF SLAB AND SIDEWALK

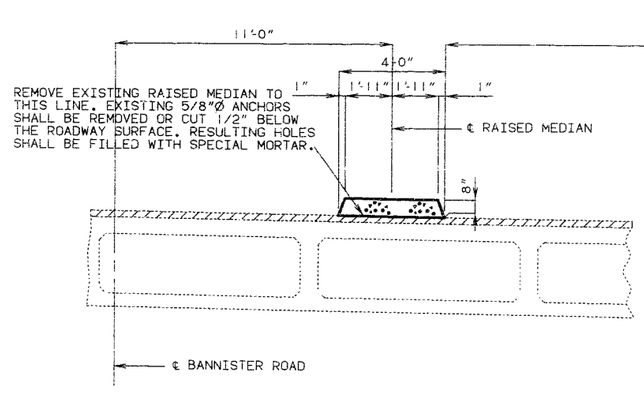

NOTE: COST OF REMOVING THE EXISTING RAISED MEDIAN BARRIER CURB SHALL BE INCLUDED IN UNIT PRICE BID PER LINEAR FEET FOR CURB REMOVAL (BRIDGES).
FOR THEORETICAL SLAB THICKNESS DIAGRAM SEE SHT. 15.
FOR DETAILS OF CONDUIT SYSTEM SEE SHT. 21.

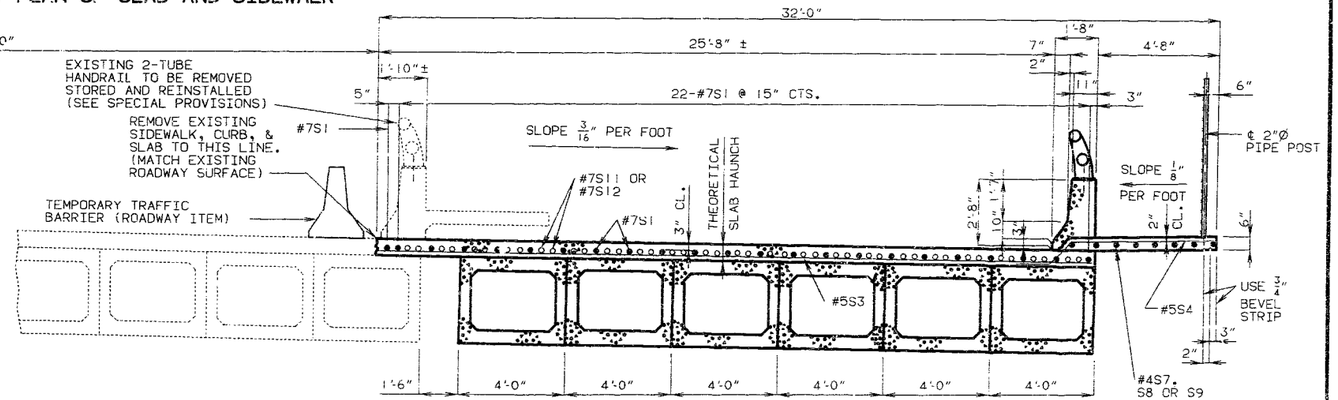

SECTION THRU BRIDGE NEAR INTERMEDIATE BENT

(RIGHT WIDENING)

NOTE: FOR DETAILS OF PEDESTRAIN CHAIN LINK FENCE SEE SHT. 20.
FOR DETAILS AND REINFORCEMENT OF SAFETY BARRIER CURB NOT SHOWN SEE SHT. 23.
FOR DETAILS AND REINFORCEMENT OF RAISED MEDIAN BARRIER NOT SHOWN SEE SHT. 19.

DETAILED DEC. 1990
CHECKED FEB. 1991

NOTE: THIS DRAWING IS NOT TO SCALE. FOLLOW DIMENSIONS.

90 192

STATE	PROJ. NO.	SHEET NO.
MO.		167

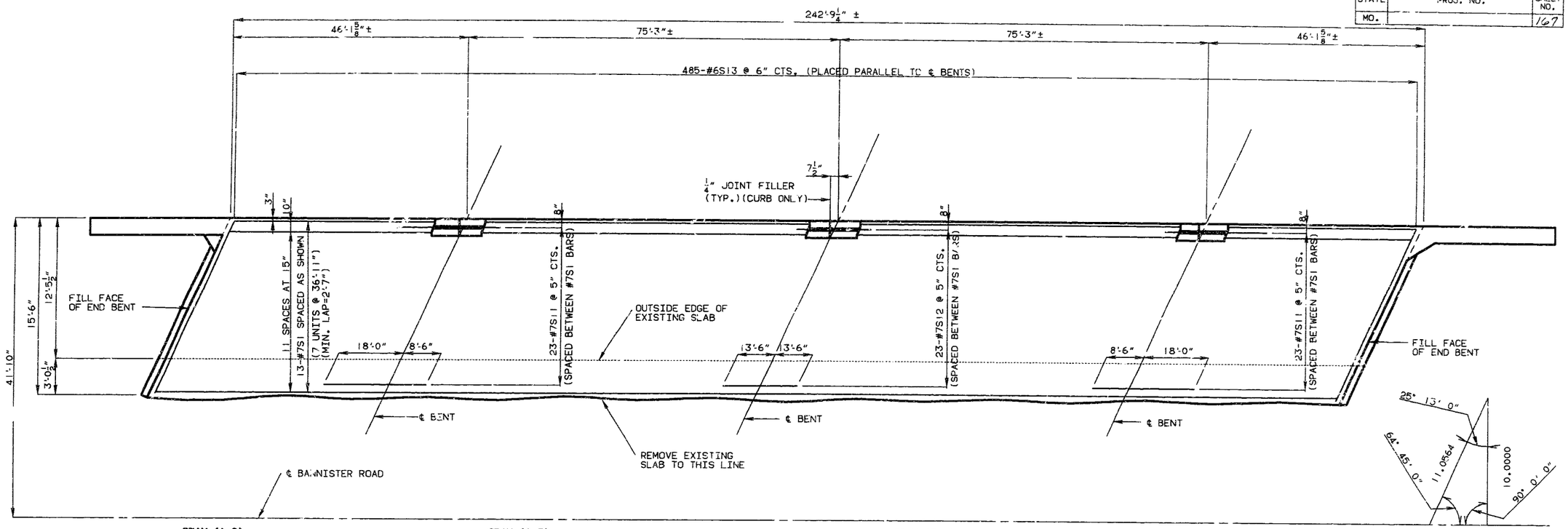

PART PLAN OF SLAB

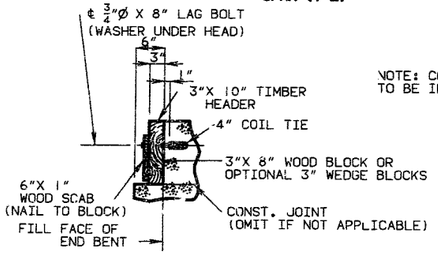

SECTION A-A

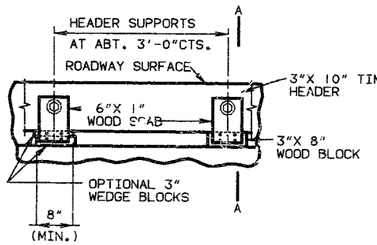

PART ELEVATION
DETAILS OF TIMBER HEADER

NOTE: COST OF TIMBER HEADER COMPLETE IN PLACE TO BE INCLUDED IN PRICE BID FOR CONCRETE.

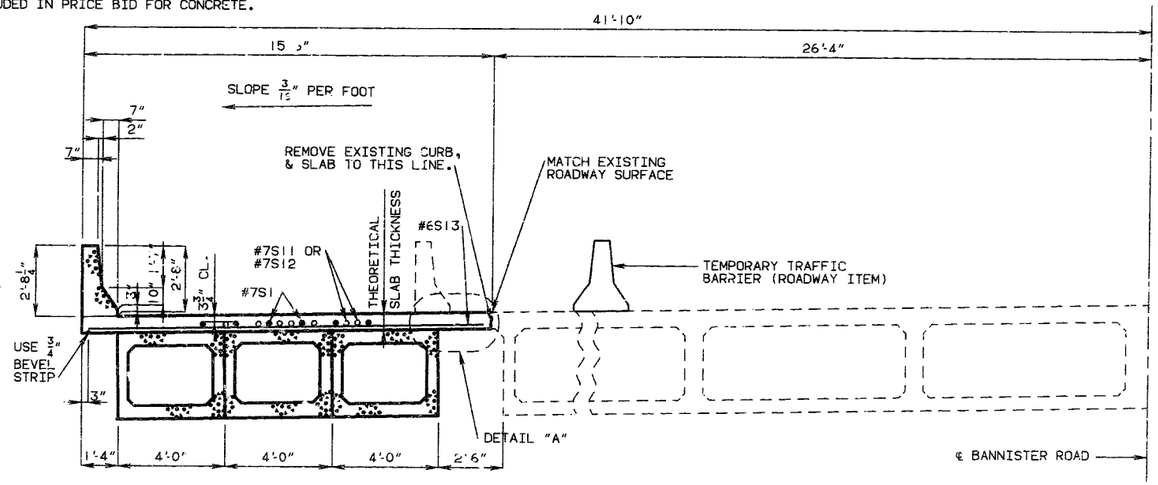

SECTION THRU BRIDGE NEAR INTERMEDIATE BENT
(LEFT WIDENING)

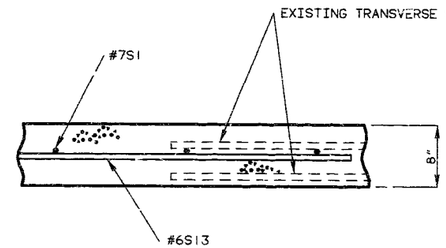

DETAIL "A"

NOTE: FOR THEORETICAL SLAB THICKNESS DIAGRAM SEE SHT. 15.
FOR DETAILS OF CONDUIT SYSTEM SEE SHT. 21.

NOTE: FOR DETAILS AND REINFORCEMENT OF SAFETY BARRIER CURB NOT SHOWN SEE SHT. 22.

DETAILED DEC. 1990
CHECKED FEB. 1991

NOTE: THIS DRAWING IS NOT TO SCALE. FOLLOW DIMENSIONS.

STATE	PROJ. NO.	SHEET NO.
MO.		168

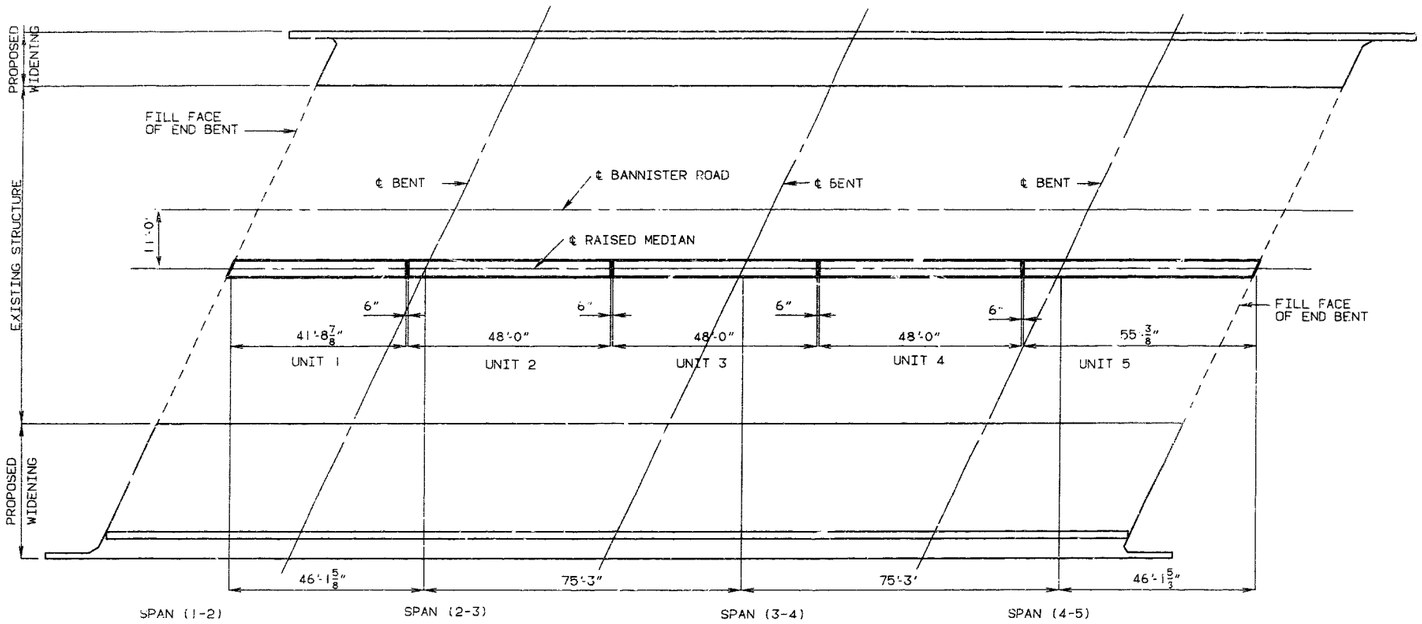

PLAN OF RAISED MEDIAN

NOTE: LONGITUDINAL DIMENSIONS SHOWN ARE TAKEN PARALLEL TO GRADE ALONG TOP OF SLAB.

NOTES FOR MEDIAN BARRIER:

TOP OF MEDIAN BARRIER CURB SHALL BE BUILT PARALLEL TO GRADE WITH MEDIAN BARRIER CURB JOINTS (EXCEPT AT END BENTS) NORMAL TO GRADE.

ALL EXPOSED EDGES OF MEDIAN BARRIER CURB SHALL HAVE A 1/2" RADIUS OR A 3/8" BEVEL, UNLESS OTHERWISE NOTED.

WHEN THE MEDIAN BARRIER CURB IS BID BY SQUARE FEET, THE CONTRACT UNIT PRICE SHALL INCLUDE THE COST OF ALL CONCRETE AND REINFORCEMENT, COMPLETE IN PLACE.

CONCRETE IN THE MEDIAN BARRIER CURB SHALL BE CLASS B1.

MEASUREMENT OF MEDIAN BARRIER CURB IS TO THE NEAREST SQUARE FOOT FOR EACH STRUCTURE, MEASURED AT TOP OF SLAB FROM FILL FACE OF TO FILL FACE OF END BENTS.

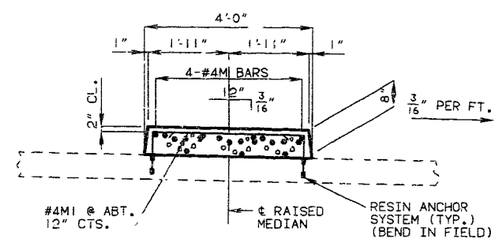

TYPICAL SECTION THRU RAISED MEDIAN

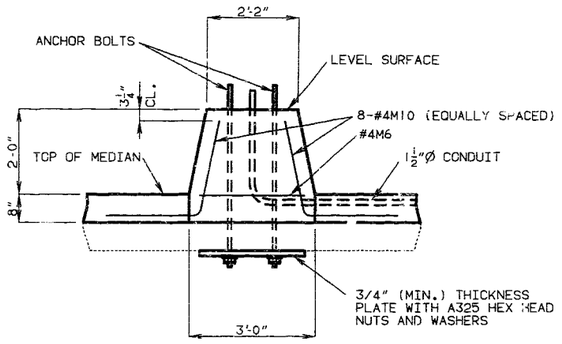

ELEVATION

NOTE: ALL PLATE MATERIAL SHALL BE GALVANIZED IN ACCORDANCE WITH A.S.T.M. A123. ALL WASHERS, NUTS AND ANCHOR BOLTS SHALL BE GALVANIZED IN ACCORDANCE WITH A.S.T.M. A153.

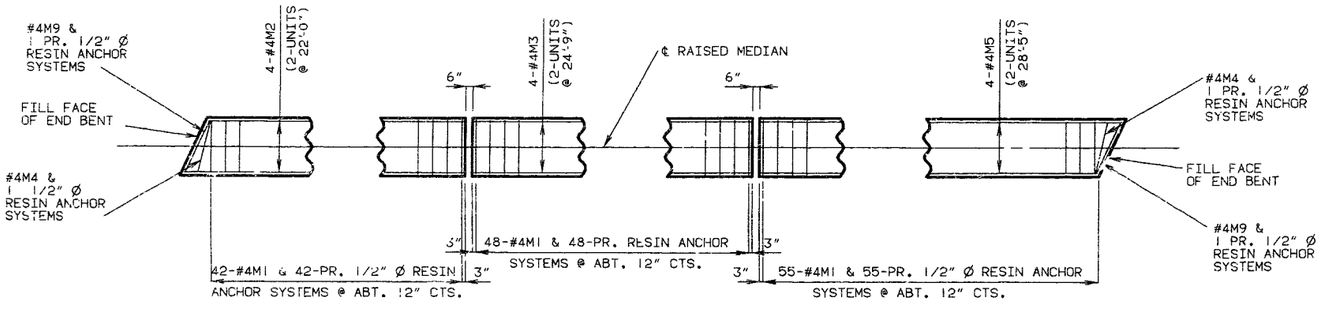

PART PLAN OF RAISED MEDIAN

NOTE: DRILL HOLES THROUGH EXISTING BOX GIRDER FOR SIGNAL POLE ANCHOR BOLTS. SHIFT HOLES AS REQUIRED TO AVOID DAMAGING BOX GIRDER REINFORCEMENT. SECURE ANCHOR BOLTS IN BOX GIRDER WITH AN APPROVED RESIN ANCHOR SYSTEM.

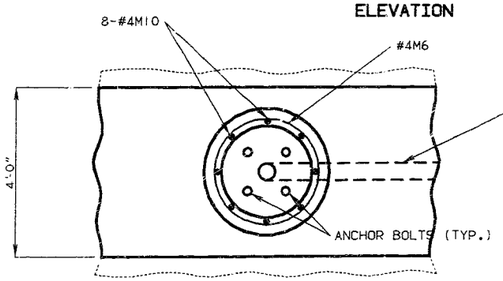

PLAN

NOTE: IF BOLT CIRCLE DIAMETER IS 18" OR GREATER INCREASE DIAMETER AT THE TOP OF THE POST BASE TO 2'-6". ANCHOR BOLT AND BASE PLATE DIMENSIONS ARE SHOWN ON THE MANUFACTURER'S APPROVED DRAWINGS. FIELD BEND #4M10 AS REQUIRED. BURR THREADS OF ANCHOR BOLTS AFTER INSTALLATION.

DETAILS OF SIGNAL POLE BASE

DETAILED JAN. 1991
CHECKED FEB. 1991

NOTE: THIS DRAWING IS NOT TO SCALE. FOLLOW DIMENSIONS.

STATE	PROJ. NO.	SHEET NO.
MO.		1-57

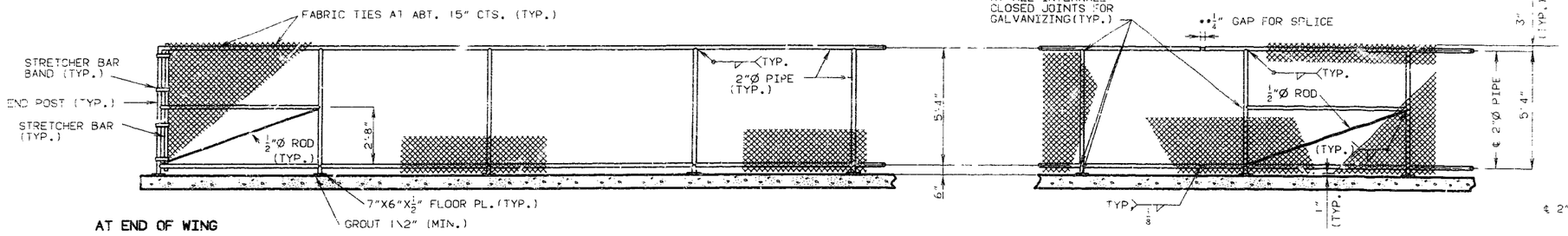

PART ELEVATION OF 6'-0" GALVANIZED STEEL GUARD FENCE

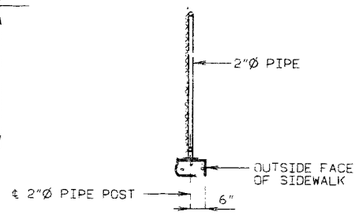

SECTION THRU FENCE

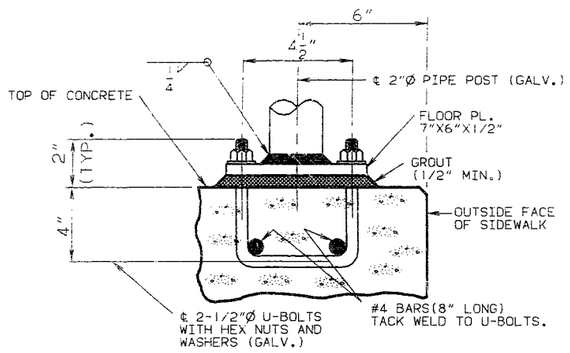

FENCE POST CONNECTION

NOTE: FOR PIPE POST SPACING SEE SHT. 17.

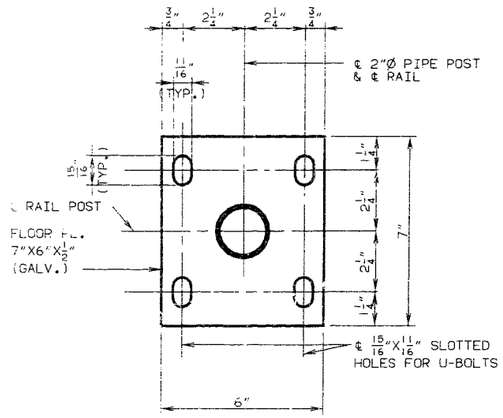

PLAN OF FLOOR PLATE

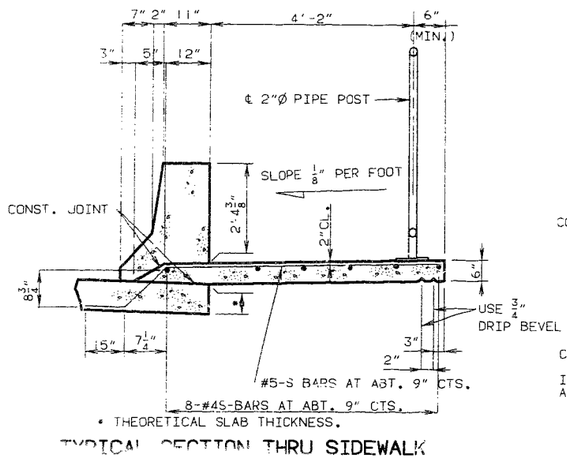

* THEORETICAL SLAB THICKNESS.

TYPICAL SECTION THRU SIDEWALK

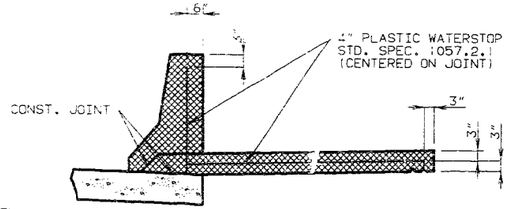

PLASTIC WATERSTOP SHALL BE PLACED IN ALL SAFETY BARRIER CURB AND SIDEWALK FILLED JOINTS.

COST OF PLASTIC WATERSTOP COMPLETE IN PLACE TO BE INCLUDED IN CONTRACT UNIT PRICE FOR SAFETY BARRIER CURB AND SIDEWALK.

DETAILS OF PLASTIC WATERSTOP

GENERAL NOTES FOR PEDESTRIAN GUARD FENCE:

PEDESTRIAN GUARD FENCE(CHAIN LINK TYPE)SHALL BE IN ACCORDANCE WITH SECTION 1043 OF THE MO. STD. SPEC., EXCEPT ALL FABRIC SHALL HAVE THE TOP AND BOTTOM EDGES KNUCKLED.

ALL RAIL POSTS SHALL BE VERTICAL. GROUT OF 1/2" MINIMUM THICKNESS SHALL BE PLACED UNDER THE FLOOR PLATES TO PROVIDE FOR VERTICAL ALIGNMENT OF RAIL POSTS.

THE CONTRACT UNIT PRICE PER LINEAR FOOT FOR PEDESTRIAN GUARD FENCE (GALVANIZED) SHALL INCLUDE FURNISHING AND ERECTING THE FENCE AND FRAME COMPLETE WITH ANCHOR BOLTS AND WASHERS.

MEASUREMENT OF THE PEDESTRIAN GUARD FENCE SHALL BE TAKEN PARALLEL TO GRADE THROUGH THE CENTERLINE OF POSTS.

THE MAXIMUM SPACING ALLOWED FOR THE BRACED PANELS (PULL POSTS) IS 100 FT.

CONNECT THE LOWER END OF THE 1/2"Ø ROD TO THE END OF THE BRACED PANEL TO WHICH THE STRETCHER BAR IS ATTACHED.

GENERAL NOTES FOR SIDEWALK:

ALL EXPOSED EDGES OF THE SIDEWALK SHALL HAVE EITHER A 1/2" RADIUS OR A 3/8" BEVEL, UNLESS OTHERWISE NOTED.

WHEN THE SIDEWALK IS BID BY SQUARE FEET, THE CONTRACT UNIT PRICE SHALL INCLUDE THE COST OF ALL CONCRETE AND REINFORCEMENT, COMPLETE IN PLACE.

CONCRETE IN THE SIDEWALK SHALL BE CLASS B2.

MEASUREMENT OF THE SIDEWALK IS TO THE NEAREST SQUARE FOOT FOR EACH STRUCTURE, MEASURED FROM THE OUTSIDE FACE OF SAFETY BARRIER CURB TO THE OUTSIDE EDGE OF SIDEWALK AND FROM FILL FACE TO FILL FACE OF END BENTS.

DETAILED JAN. 1991
CHECKED MAR. 1991

NOTE: THIS DRAWING IS NOT TO SCALE. FOLLOW DIMENSIONS.

STATE	PROJ. NO.	SHEET NO.
MO.		170

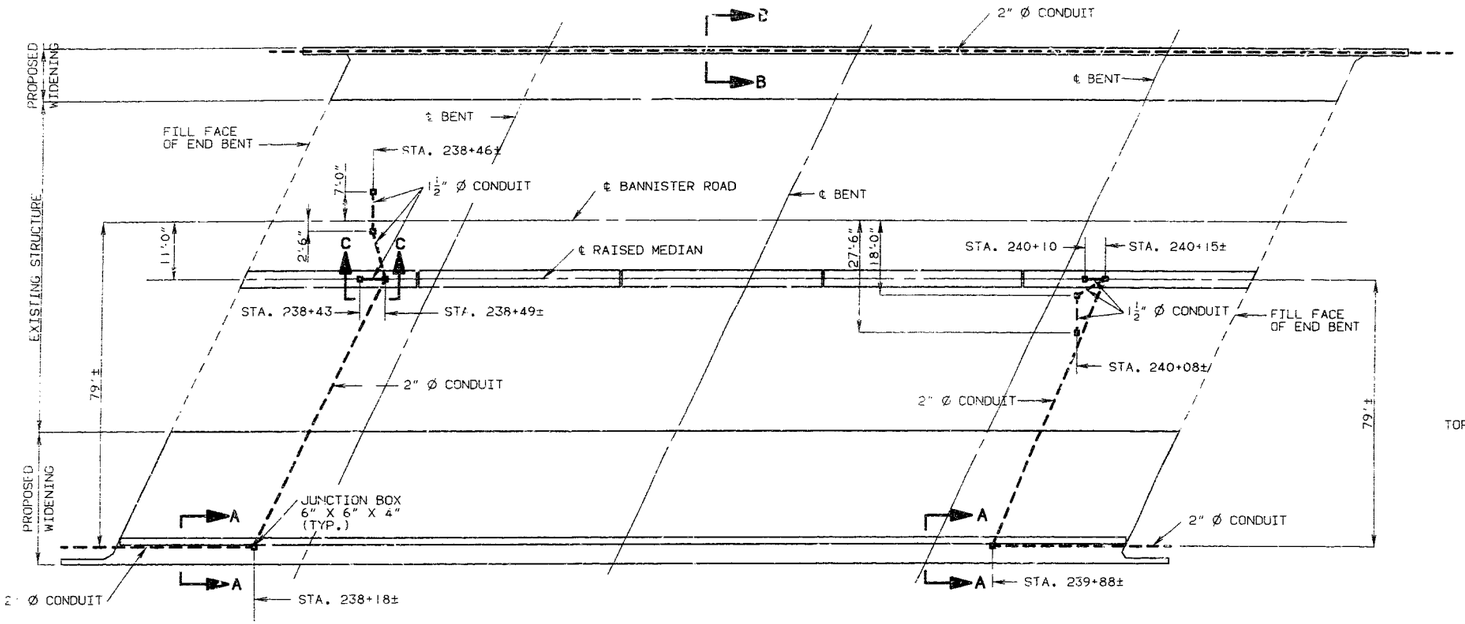

SPAN (1-2) SPAN (2-3) SPAN (3-4) SPAN (4-5)

PLAN OF SLAB SHOWING LOCATION OF CONDUIT

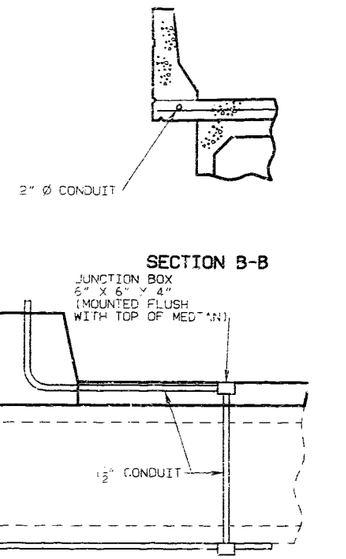

GENERAL NOTES FOR CONDUIT:

ALL CONDUIT SHALL BE RIGID NON-METALLIC SCHEDULE 40 HEAVY WALL PVC (POLYVINYL CHLORIDE PLASTIC) WITH 3" MIN. COVER IN CONCRETE. EACH SECTION OF CONDUIT SHALL BEAR THE UNDERWRITERS' LABORATORIES, INC., (UL) LABEL.

SHIFT REINFORCING STEEL IN FIELD WHERE NECESSARY TO CLEAR CONDUIT AND JUNCTION BOXES.

SIGNAL POLES, MAGNETOMETER PROBES AND WIRING ARE NOT INCLUDED IN THE CONTRACT UNIT PRICE FOR CONDUIT SYSTEM ON STRUCTURE.

ALL JUNCTION BOXES SHALL BE PVC MOLDED AND EQUAL TO CARLON ELECTRICAL CONSTRUCTION PRODUCTS OR TRIANGLE CONDUIT AND CABLE COMPANY, INC. THE CONDUIT TERMINATIONS MAY BE PERMANT OR SEPARABLE .

ALL JUNCTION BOXES SHALL BE SURFACE MOUNTED AND SECURELY ATTACHED TO THE EXISTING CONCRETE EXCEPT FOR THE JUNCTION BOXES MOUNTED IN THE RAISED MEDIAN.

MEDIAN JUNCTION BOXES SHALL HAVE STAINLESS STEEL COVERS.

THE TERMINATIONS AND COVERS SHALL BE OF WATER TIGHT CONSTRUCTION.

WEEPHOLES SHALL BE PROVIDED AT APPROPRIATE LOCATIONS TO DRAIN ANY MOISTURE IN THE CONDUIT LINES.

COST OF FURNISHING AND PLACING ALL ADDITIONAL MATERIAL FOR SIGNAL POLE BASES AT STA. 238+43 (11' RT.) AND STA. 240+10 (11' RT.) NOT COVERED ELSEWHERE SHALL BE INCLUDED IN THE CONTRACT UNIT PRICE FOR RAISED MEDIAN BARRIER.

DRILL HOLES THROUGH EXISTING BOX GIRDERS FOR VERTICAL CONDUIT. SHIFT HOLES AS REQUIRED TO AVOID DAMAGING BOX GIRDER REINFORCEMENT. WITH VERTICAL CONDUIT IN PLACE, SEAL REMAINING HOLES IN GIRDER AS APPROVED BY THE ENGINEER.

FOR DETAILS OF WIRING SEE ELECTRICAL PLANS.

EXPANSION FITTINGS SHALL PROVIDE A MINIMUM MOVEMENT IN EITHER DIRECTION OF ½" AT FILLED JOINTS. EXPANSION FITTINGS SHALL BE EQUAL TO CARLON ELECTRICAL CONSTRUCTION PRODUCTS OR TRIANGLE CONDUIT AND CABLE COMPANY, INC.

CONDUIT SHALL BE SECURED TO CONCRETE WITH CLAMPS AT ABOUT 5'-0" CTS.

FOR DETAILS OF SIGNAL POLE BASES SEE SHEET NO. 19

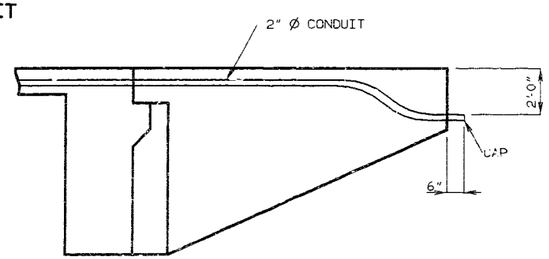

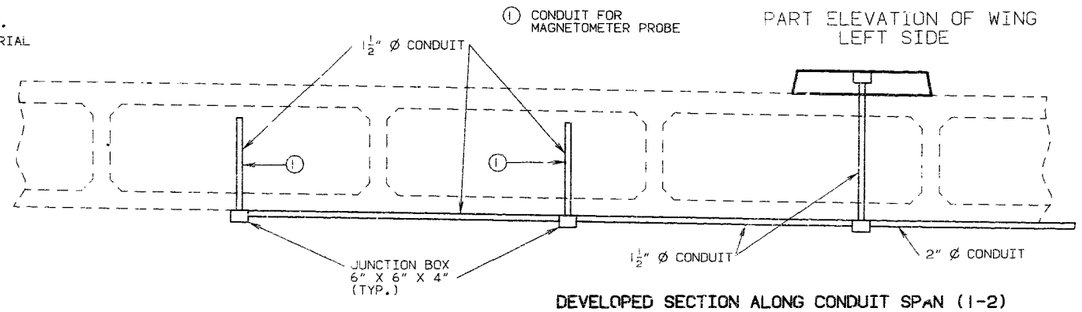

DEVELOPED SECTION ALONG CONDUIT SPAN (1-2)

(SPAN (4-5) SIMILAR)

SECTION C-C

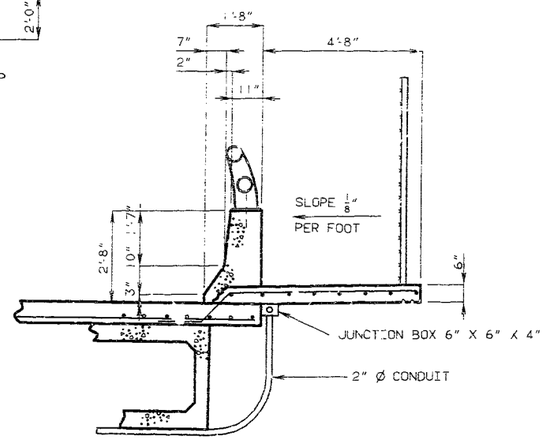

SECTION A-A

DETAILED DEC. 1990
CHECKED FEB. 1991

NOTE: THIS DRAWING IS NOT TO SCALE. FOLLOW DIMENSIONS.

STATE	PROJ. NO.	SHEET NO.
MO.		171

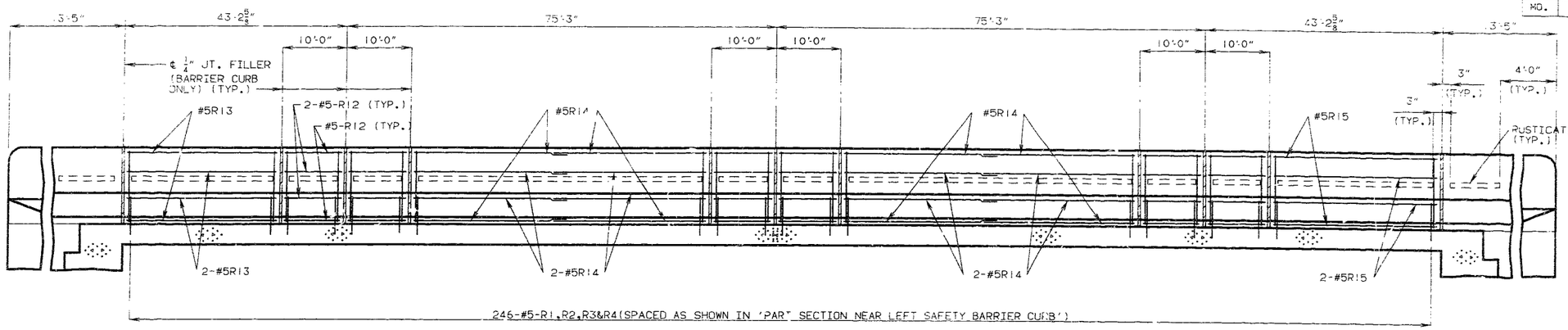

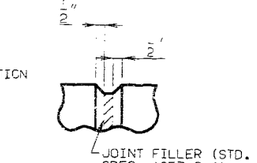

FILLED JOINT DETAIL

SPAN (1-2) SPAN (2-3) SPAN (3-4)

SECTION NEAR LEFT BARRIER CURB

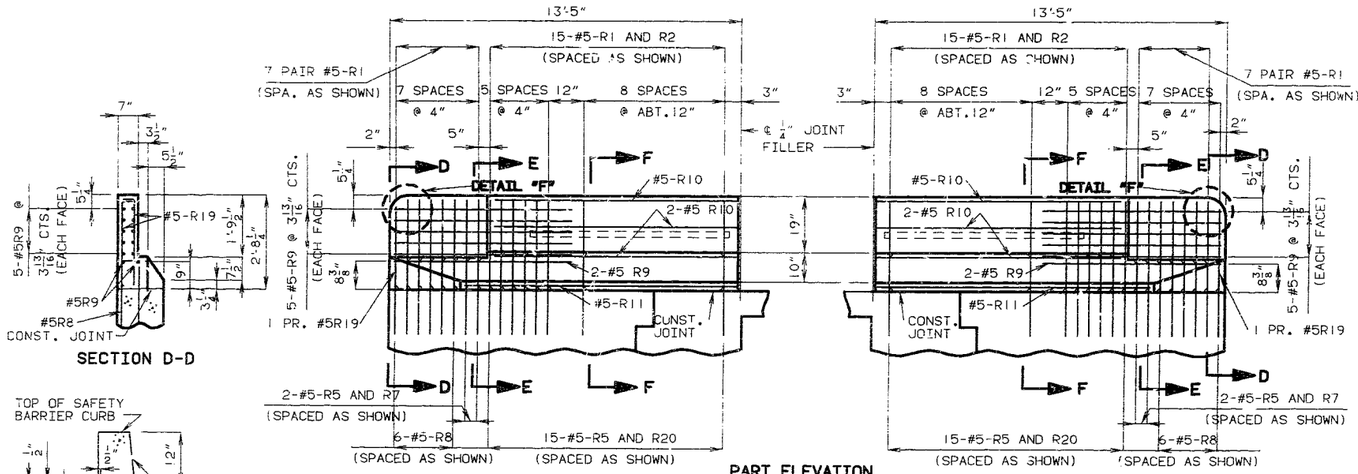

NOTE: PLASTIC WATERSTOP SHALL BE PLACED IN ALL SAFETY BARRIER CURB FILLED JOINTS.

DETAILED DEC. 1990
CHECKED MAR. 1991

COST OF PLASTIC WATERSTOP COMPLETE IN PLACE TO BE INCLUDED IN CONTRACT UNIT PRICE FOR SAFETY BARRIER CURB.

DETAILS OF SAFETY BARRIER CURB AT END BENTS

NOTE: THIS DRAWING IS NOT TO SCALE. FOLLOW DIMENSIONS.

NOTE:

TOP OF SAFETY BARRIER CURB SHALL BE BUILT PARALLEL TO GRADE WITH SAFETY BARRIER CURB JOINTS (EXCEPT AT END BENTS) NORMAL TO GRADE.

ALL EXPOSED EDGES OF SAFETY BARRIER CURB SHALL HAVE EITHER A 1/2" RADIUS OR A 3/8" BEVEL, UNLESS OTHERWISE NOTED.

WHEN THE SAFETY BARRIER CURB IS BID BY LINEAR FEET, THE CONTRACT UNIT PRICE SHALL INCLUDE THE COST OF ALL CONCRETE AND REINFORCEMENT, COMPLETE-IN-PLACE.

CONCRETE FOR THE SAFETY BARRIER CURB SHALL BE CLASS B1.

MEASUREMENT OF THE SAFETY BARRIER CURB IS TO THE NEAREST LINEAR FOOT FOR EACH STRUCTURE, MEASURED ALONG THE OUTSIDE TOP OF SLAB FROM END OF WING TO END OF WING.

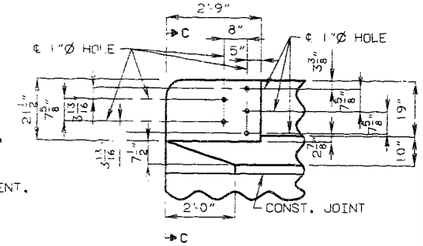

PART ELEVATION

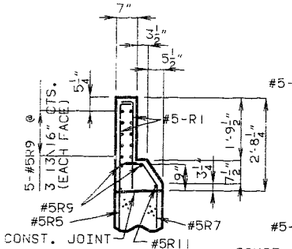

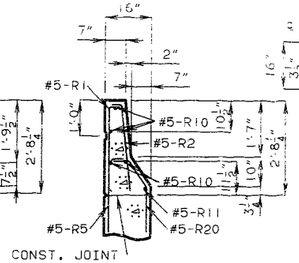

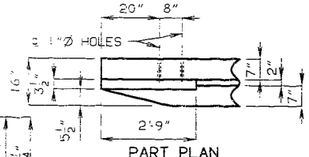

PART PLAN

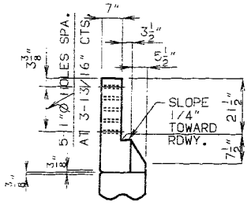

PART SECTION C-C

DETAIL "F" (TYPICAL)

DETAILS OF GUARD RAIL ATTACHMENT

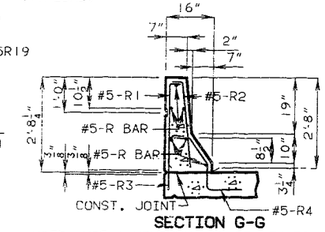

NOTE: USE A MINIMUM LAP OF 17" FOR #5 HORIZONTAL SAFETY BARRIER CURB BARS.

THE CROSS-SECTIONAL AREA ABOVE THE SLAB = 2.27 SQ. FT.

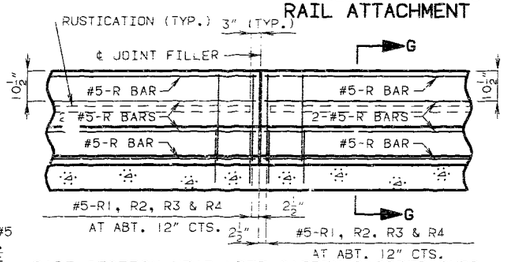

PART SECTION NEAR LEFT SAFETY BARRIER CURB

STATE	PROJ. NO.	SHEET NO.
MO.		172

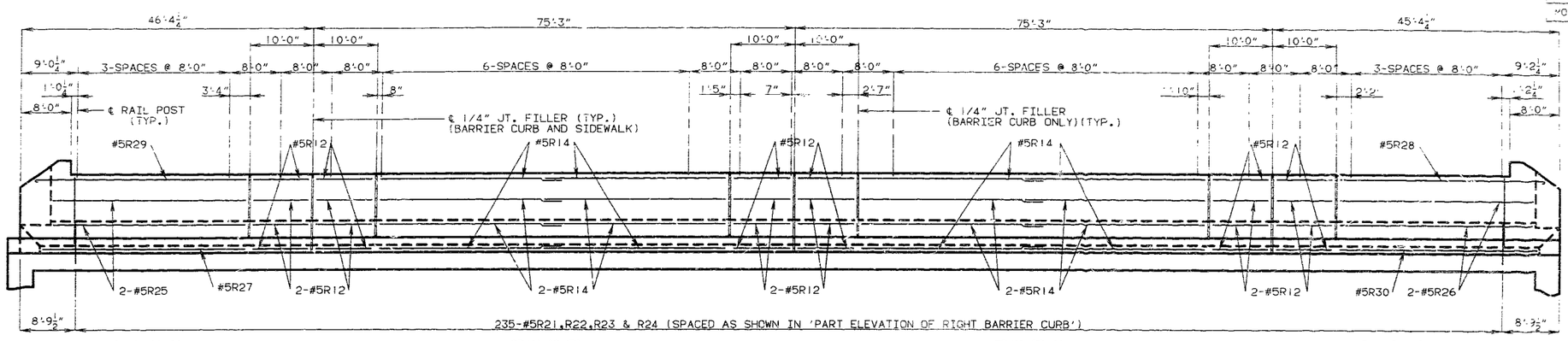

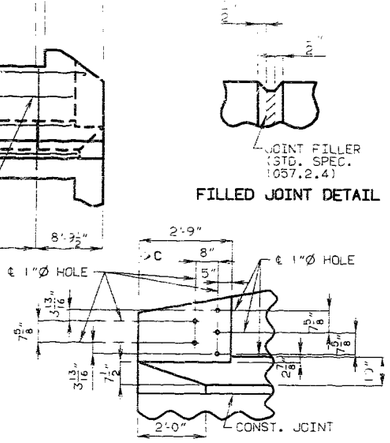

ELEVATION OF RIGHT BARRIER CURB

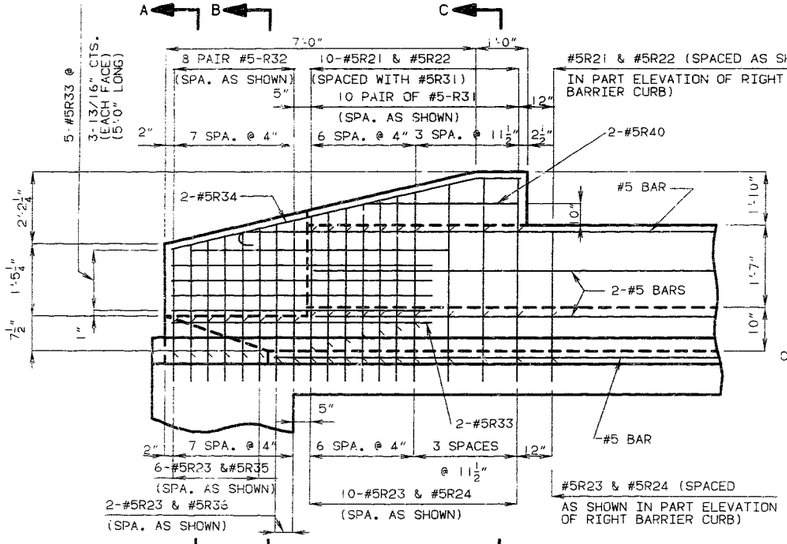

PART ELEVATION OF BARRIER CURB AT END BENT

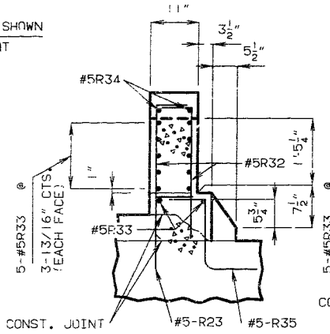

SECTION A-A

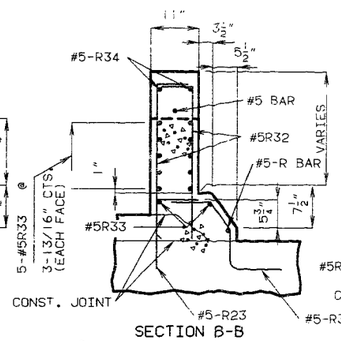

SECTION B-B

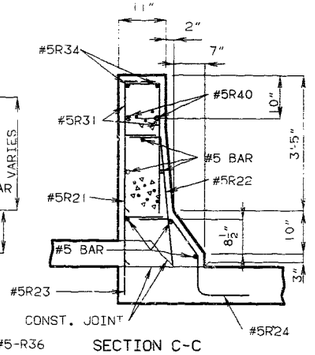

SECTION C-C

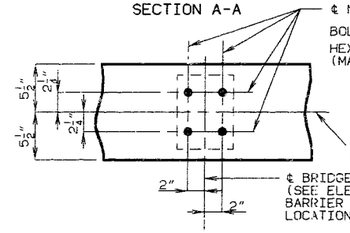

ANCHOR BOLT LOCATION
(BRIDGE RAIL POST)

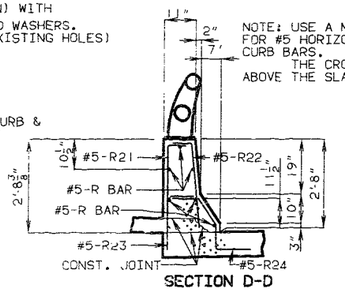

SECTION D-D

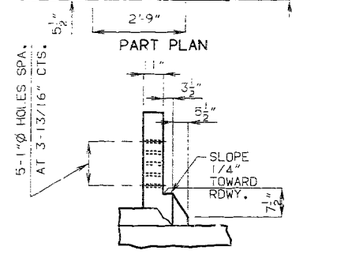

PART SECTION C-C

DETAILS OF GUARD RAIL ATTACHMENT

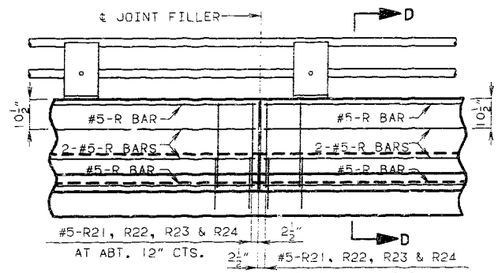

PART ELEVATION OF RIGHT BARRIER CURB

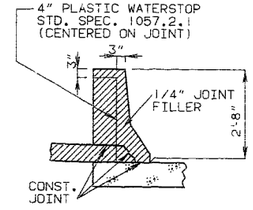

DETAILS OF PLASTIC WATERSTOP

NOTE: PLASTIC WATERSTOP SHALL BE PLACED IN ALL SAFETY BARRIER CURB FILLED JOINTS.

COST OF PLASTIC WATERSTOP COMPLETE IN PLACE TO BE INCLUDED IN CONTRACT UNIT PRICE FOR SAFETY BARRIER CURB.

NOTE:

TOP OF SAFETY BARRIER CURB SHALL BE BUILT PARALLEL TO GRADE WITH SAFETY BARRIER CURB JOINTS (EXCEPT AT END BENTS) NORMAL TO GRADE.

ALL EXPOSED EDGES OF SAFETY BARRIER CURB SHALL HAVE EITHER A 1/2" RADIUS OR A 3/8" BEVEL, UNLESS OTHERWISE NOTED.

WHEN THE SAFETY BARRIER CURB IS BID BY LINEAR FEET, THE CONTRACT UNIT PRICE SHALL INCLUDE THE COST OF ALL CONCRETE AND REINFORCEMENT, COMPLETE-IN-PLACE.

CONCRETE FOR THE SAFETY BARRIER CURB SHALL BE CLASS B1.

MEASUREMENT OF THE SAFETY BARRIER CURB IS TO THE NEAREST LINEAR FOOT FOR EACH STRUCTURE, MEASURED ALONG THE OUTSIDE TOP OF SLAB FROM END OF CURB TO END OF CURB.

EXISTING TWO TUBE BRIDGE RAIL AND POSTS SHALL BE REMOVED AND REINSTALLED. (SEE SPECIAL PROVISIONS)

CUT RAIL TUBES AND RECAP IN ORDER TO MAINTAIN 3" GAP BETWEEN END OF RAIL AND END POST. DRILL 1/2"Ø DRAIN HOLE 2" FROM END OF RAIL.

NOTES FOR ALUMNIUM RAIL

ALL BRIDGE RAIL POSTS SHALL BE SET NORMAL TO GRADE.

ALUMNIUM WASHER SHIMS BETWEEN TOP OF SAFETY BARRIER CURB AND POST BASE MAY BE USED FOR ADJUSTING BRIDGE RAIL ALIGNMENT. MAXIMUM THICKNESS OF SHIM SHALL BE 1/8"

WHERE MORE TILTING OF POST IS REQUIRED FOR PROPER ALIGNMENT, CONCRETE BEARING AREAS SHALL BE GROUND DOWN.

ALL PARTS OF THE BRIDGE RAIL, EXCEPT ANCHOR BOLTS, NUTS, WASHERS AND SET SCREWS ARE TO BE ALUMINUM MATERIAL.

IF NECESSARY THE EXISTING ALUMNIUM TUBE BRIDGE RAIL SHALL BE BENT TO CONFORM TO THE HORIZONTAL AND VERTICAL ALIGNMENT OF THE CURB.

OMIT SET SCREW IN SIDE OF RAIL POST ADJACENT TO FILLED JOINTS IN SAFETY BARRIER CURB AT RAIL EXPANSION JOINTS.

ALL RAIL SPLICES TO BE LOCATED AT 1/4 POINT BETWEEN RAIL POSTS.

A THIN COATING OF MATERIAL SHALL BE APPLIED TO THE STAINLESS STEEL CAP SCREWS AND THE STAINLESS STEEL FILLISTER HEAD MACHINE SCREWS TO PREVENT LOCKING TO ALUMNIUM POSTS OR TUBE. THE COATING MATERIAL SHALL BE EQUAL TO WYNN OIL COMPANY'S "VISCOTENE" OR STAHL SPECIALTY COMPANY'S "PBC 516" OR MATIONAL CHEMSEARCH CORPORATION'S "THREAD EZE".

DETAILED SEPT 1990
CHECKED FEB. 1991

NOTE: THIS DRAWING IS NOT TO SCALE. FOLLOW DIMENSIONS.

JACKSON COUNTY A-1643R1

FOR INFORMATION ONLY

A16433, Sht. 60

COMPLETE BILL OF REINFORCING STEEL

NO. REQ'D.	MARK NO. SIZE MARK	LOCATION	EPOXY (E)	SHAPE NO.	STIRRUP (S)	SUBSTR. (X)	VARIES (V)	NO. EACH	DIMENSIONS B FT. IN.	C FT. IN.	D FT. IN.	E FT. IN.	F FT. IN.	H FT. IN.	K FT. IN.	NOMINAL LENGTH FT.IN.	ACTUAL LENGTH FT.IN.	WEIGHT LBS.
		SUBSTRUCTURE																
		INT. BT.NO.2																
46	8D20	FOOTINGS		17		X			6 8.000							7 7	7 7	931
24	6D21	FOOTINGS		20		X			7 3.000							7 3	7 3	261
4	6D23	FOOTINGS		10		X				4 7.000	6 6.000					15 8	15 4	92
2	6D27	FOOTINGS		10		X				5 4.000	8 0.000					18 8	18 4	55
12	8D28	FOOTINGS		20		X			8 9.000							8 9	8 9	280
4	7H20	BEAM		7		X			4 1.000	2 11.000						9 9	9 9	80
7	9H21	BEAM		18		X			14 5.000							16 11	16 11	403
2	6H22	BEAM		20		X			14 5.000							14 5	14 5	43
4	9H23	BEAM		20		X			14 5.000							14 5	14 5	196
1	6H24	BEAM		20		X			28 3.000							28 3	28 3	42
1	6H25	BEAM		20		X			29 9.000							29 9	29 9	45
4	9H26	BEAM		18		X	V	1	28 3.000							30 9	30 9	
		INCREMENT = 6.000 INCH							29 9.000							32 3	32 3	428
8	9H27	BEAM		17		X	V	1	28 3.000							29 6	29 6	
		INCREMENT = 2.625 INCH							29 9.000							31 0	31 0	523
4	6H28	BEAM		20		X	V	1	8 0.000							8 0	8 0	
	"	INCREMENT = 5.000 INCH							9 3.000							9 3	9 3	52
61	4P20	COLUMN		16		X			2 9.000							9 6	9 6	387
13	6U20	BEAM		13	S	X			2 11.000	2 8.000	2 11.000	2 8.000				12 6	12 0	234
26	6U21	BEAM		13	S	X			2 11.000	2 9.000	2 11.000	2 9.000				12 8	12 2	475
2	6U22	BEAM		13	S	X			3 1.000	2 9.000	3 1.000	2 9.000				13 0	12 6	38
2	6U23	BEAM		13	S	X			3 2.625	2 9.000	3 2.625	2 9.000				13 3	12 10	39
37	6U24	BEAM		13	S	X			2 11.000	2 3.000	2 11.000	2 3.000				11 8	11 2	621
1	6U25	BEAM		13	S	X			2 8.250	2 3.000	2 8.250	2 3.000				11 3	10 9	16
1	6U26	BEAM		13	S	X			3 1.000	2 8.000	3 1.000	2 8.000				12 10	12 4	19
1	6U27	BEAM		13	S	X			3 2.625	2 8.000	3 2.625	2 8.000				13 1	12 8	19
4	6U28	BEAM		13	S	X			2 0.000	2 8.000	2 0.000	2 8.000				10 8	10 2	61
4	6U29	BEAM		13	S	X			2 0.000	2 3.000	2 0.000	2 3.000				9 10	9 4	56
26	8V20	COLUMNS		17		X			21 3.000							22 2	22 2	1539
20	8V22	COLUMNS		17		X			21 10.000							22 9	22 9	1215
28	6V25	BEAM		20		X			2 6.000							2 6	2 6	105
		INT. BT. 3																
46	8D30	FOOTINGS		17		X			6 8.000							7 7	7 7	931
24	6D31	FOOTINGS		20		X			7 3.000							7 3	7 3	261
4	6D33	FOOTINGS		10		X				4 7.000	6 6.000					15 8	15 4	92
2	6D37	FOOTINGS		10		X				5 4.000	8 0.000					18 8	18 4	55
7	8D38	FOOTINGS		20		X			5 9.000							8 9	8 9	164
6	7D39	FOOTINGS		20		X			8 9.000							8 9	8 9	107
4	7H30	BEAM		7		X			4 1.000	2 11.000						9 9	9 9	80
7	9H31	BEAM		18		X			14 5.000							16 11	16 11	403
2	6H32	BEAM		20		X			14 5.000							14 5	14 5	43
4	9H33	BEAM		20		X			14 5.000							14 5	14 5	196
1	6H34	BEAM		20		X			28 3.000							28 3	28 3	42

COMPLETE BILL OF REINFORCING STEEL

NO. REQ'D.	MARK NO. SIZE MARK	LOCATION	EPOXY (E)	SHAPE NO.	STIRRUP (S)	SUBSTR. (X)	VARIES (V)	NO. EACH	DIMENSIONS B FT. IN.	C FT. IN.	D FT. IN.	E FT. IN.	F FT. IN.	H FT. IN.	K FT. IN.	NOMINAL LENGTH FT.IN.	ACTUAL LENGTH FT.IN.	WEIGHT LBS.
1	6H35	BEAM		20		X			29 9.000							29 9	29 9	45
4	9H36	BEAM		18		X	V	1	28 3.000							30 9	30 9	
		INCREMENT = 6.000 INCH							29 9.000							32 3	32 3	428
8	9H37	BEAM		17		X	V	1	28 3.000							29 6	29 6	
		INCREMENT = 2.625 INCH							29 9.000							31 0	31 0	523
4	6H38	BEAM		20		X	V	1	8 0.000							8 0	8 0	
		INCREMENT = 5.000 INCH							9 3.000							9 3	9 3	52
64	4P30	COLUMNS		16		X			2 9.000							9 6	9 6	406
13	6U30	BEAM		13	S	X			2 11.000	2 8.000	2 11.000	2 8.000				12 6	12 0	234
26	6U31	BEAM		13	S	X			2 11.000	2 9.000	2 11.000	2 9.000				12 8	12 2	475
2	6U32	BEAM		13	S	X			3 1.000	2 9.000	3 1.000	2 9.000				13 0	12 6	38
2	6U33	BEAM		13	S	X			3 2.625	2 9.000	3 2.625	2 9.000				13 3	12 10	39
37	6U34	BEAM		13	S	X			2 11.000	2 3.000	2 11.000	2 3.000				11 8	11 2	621
1	6U35	BEAM		13	S	X			2 8.250	2 3.000	2 8.250	2 3.000				11 3	10 9	16
1	6U36	BEAM		13	S	X			3 1.000	2 8.000	3 1.000	2 8.000				12 10	12 4	19
1	6U37	BEAM		13	S	X			3 2.625	2 8.000	3 2.625	2 8.000				13 1	12 8	19
4	6U38	BEAM		13	S	X			2 0.000	2 8.000	2 0.000	2 8.000				10 8	10 2	61
4	6U39	BEAM		13	S	X			2 0.000	2 3.000	2 0.000	2 3.000				9 10	9 4	56
26	8V30	COLUMN		17		X			22 1.000							23 0	23 0	1597
20	8V31	COLUMN		17		X			22 8.000							23 7	23 7	1259
28	6V35	BEAM		20		X			2 6.000							2 6	2 6	105
		INT. BT. 4																
46	8D20	FOOTING		17		X			6 8.000							7 7	7 7	931
24	6D21	FOOTING		20		X			7 3.000							7 3	7 3	261
4	6D23	FOOTING		10		X				4 7.000	6 6.000					15 8	15 4	92
2	6D27	FOOTING		10		X				5 4.000	8 0.000					18 8	18 4	55
12	8D28	FOOTING		20		X			8 9.000							8 9	8 9	280
4	7H20	BEAM		7		X			4 1.000	2 11.000						9 9	9 9	80
7	9H21	BEAM		18		X			14 5.000							16 11	16 11	403
2	6H22	BEAM		20		X			14 5.000							14 5	14 5	43
4	9H23	BEAM		20		X			14 5.000							14 5	14 5	196
1	6H24	BEAM		20		X			28 3.000							28 3	28 3	42
1	6H25	BEAM		20		X			29 9.000							29 9	29 9	45
4	9H26	BEAM		18		X	V	1	28 3.000							30 9	30 9	
		INCREMENT = 6.000 INCH							29 9.000							32 3	32 3	428
8	9H27	BEAM		17		X	V	1	28 3.000							29 6	29 6	
		INCREMENT = 2.625 INCH							29 9.000							31 0	31 0	523
4	6H28	BEAM		20		X	V	1	8 0.000							8 0	8 0	
		INCREMENT = 5.000 INCH							9 3.000							9 3	9 3	52
61	4P20	COLUMN		16		X			2 9.000							9 6	9 6	387
13	6U20	BEAM		13	S	X			2 11.000	2 8.000	2 11.000	2 8.000				12 6	12 0	234
26	6U21	BEAM		13	S	X			2 11.000	2 9.000	2 11.000	2 9.000				12 8	12 2	475
2	6U22	BEAM		13	S	X			3 1.000	2 9.000	3 1.000	2 9.000				13 0	12 6	38

TWO ADDITIONAL *SS,H10,SIZ#RIE* ARE INCLUDED IN THE BAR BILL FOR TESTING.

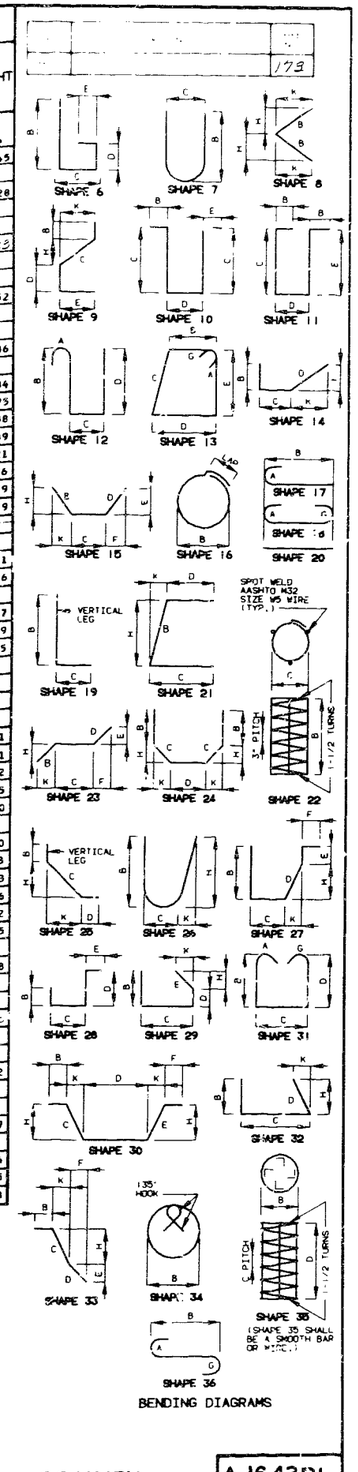

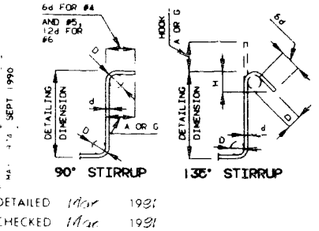

STIRRUP HOOK DIMENSIONS				
GRADES 40 - 50 - 60 KSI				
BAR SIZE	D (IN.)	90° HOOK	135° HOOK	
		HOOK A OR G	HOOK A OR G	APPROX. H
#4	2"	4-1/2"	4-1/2"	3"
#5	2-1/2"	6"	5-1/2"	3-3/4"
#6	4-1/2"	12"	8"	4-1/2"

NOTE: UNLESS OTHERWISE NOTED DIAMETER "D" IS THE SAME FOR ALL BENDS AND HOOKS ON A BAR.

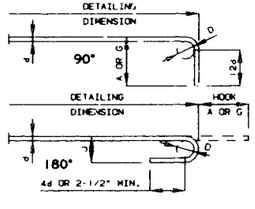

END HOOK DIMENSIONS					
BAR SIZE	D (IN.)	ALL GRADES			
		180 HOOKS		90 HOOKS	
		A OR G	J	A OR G	
#3	2-1/4"	5"	3"	6"	
#4	3"	6"	4"	8"	
#5	3-3/4"	7"	5"	10"	
#6	4-1/2"	8"	6"	12"	
#7	5-1/4"	10"	7"	14"	
#8	6"	11"	8"	16"	
#9	9-1/2"	15"	11-3/4"	19"	
#10	10-3/4"	17"	13-1/4"	22"	
#11	12"	19"	14-3/4"	2'-0"	
#14	18-1/4"	2'-3"	21-3/4"	2'-7"	

NOTE:
ALL STANDARD HOOKS AND BENDS OTHER THAN 180 DEG. TO BE BENT WITH THE PIN DIAMETER AS FOR 90 DEG. STD. HOOKS.
HOOKS AND BENDS SHALL BE IN ACCORDANCE WITH THE PROCEDURES AS SHOWN ON THIS SHEET.
E = EPOXY COATED REINFORCEMENT.
S = STIRRUP.
X = BAR IS INCLUDED IN SUBSTRUCTURE QUANTITIES.
V = BAR DIMENSIONS VARY IN EQUAL INCREMENTS BETWEEN DIMENSIONS SHOWN ON THIS LINE AND THE FOLLOWING LINE.
NO. EA. = NUMBER OF BARS OF EACH LENGTH.
NOMINAL LENGTHS ARE BASED ON OUT TO OUT DIMENSIONS SHOWN IN BENDING DIAGRAMS AND ARE LISTED FOR FABRICATORS USE. (NEAREST INCH)
ACTUAL LENGTHS ARE MEASURED ALONG CENTERLINE BAR TO THE NEAREST INCH.
PAYWEIGHTS ARE BASED ON ACTUAL LENGTHS.
FOUR ANGLE OR CHANNEL SPACERS ARE REQUIRED FOR EACH COLUMN SPIRAL. SPACERS ARE TO BE PLACED ON INSIDE OF SPIRALS. LENGTH AND WEIGHT OF COLUMN SPIRALS DO NOT INCLUDE SPLICES OR SPACERS.
REINFORCING STEEL (GRADE 60) = FY 60,000 PSI.

DETAILED Mar 1991
CHECKED Mar 1991

JACKSON COUNTY

A-1643RI

FOR INFORMATION ONLY **A16433, Sht. 61**

COMPLETE BILL OF REINFORCING STEEL

NO. REQ'D.	MARK NO. SIZE MARK	LOCATION	EPOXY (E)	SHAPE NO.	STIRRUP (S)	SUBSTR. (X)	VARIES (V)	NO. EACH	DIMENSIONS B	C	D	E	F	H	K	NOMINAL LENGTH	ACTUAL LENGTH	WEIGHT
									FT. IN.	FT. IN.	FT. IN.	FT. IN.	FT. IN.	FT. IN.	FT. IN.	FT. IN.	FT. IN.	LBS.
2	6U23	BEAM		13	S	X		3	2.625	2 9.000	3 2.625	2 9.000				13 3	12 10	39
37	6U24	BEAM		13	S	X		2	11.000	2 3.000	2 11.000	2 3.000				11 8	11 2	621
1	6U25	BEAM		13	S	X		2	8.250	2 3.000	2 8.250	2 3.000				11 3	10 9	16
1	6U26	BEAM		13	S	X		3	1.000	2 8.000	3 1.000	2 8.000				12 10	12 4	19
1	6U27	BEAM		13	S	X		3	2.625	2 8.000	3 2.625	2 8.000				13 1	12 8	19
4	6U28	BEAM		13	S	X		2	0.000	2 8.000	2 0.000	2 8.000				10 8	10 2	63
4	6U29	BEAM		13	S	X		2	0.000	2 3.000	2 0.000	2 3.000				9 10	9 4	56
26	8V21	COLUMN		17		X		21	0.000							21 11	21 11	1521
20	8V23	COLUMN		17		X		21	7.000							22 6	22 6	1202
28	6V25	BEAM		20		X		2	6.000							2 6	2 6	105
		SUPER-STRUCTURE																
		END BENT 1																
6	6F1	DIAPH.		23					14.000	4 9.500	14.000	7.500	11.875	7.500	11.875	7 2	7 1	64
5	6F2	DIAPH.		23				2	5.000	4 0.000	14.000		14.000	2 2.250	12.375	7 7	7 6	56
6	6F3	DIAPH.		15					14.000	2 11.000	14.000	11.875	7.500	11.875	7.500	5 3	5 2	47
5	6F4	DIAPH.		21				2	5.000	7 5.000				2 2.250	12.375	9 10	9 6	71
8	7H1	BEAM		20				17	0.000							17 0	17 0	278
10	6H2	BEAM		20				32	10.000							32 10	32 10	493
3	4H3	DIAPH.		20					4 11.000							4 11	4 11	10
6	4H4	DIAPH.		20					34 11.000							34 11	34 11	140
1	4H5	APP. HAUNCH		20					30 0.000							30 0	30 0	20
1	4H6	APP. HAUNCH		20					14 0.000							14 0	14 0	9
6	4H7	DIAPH.		20					16 9.000							16 9	16 9	67
4	6H8	BEAM		20					14 0.000							14 0	14 0	84
8	6H9	WING		20					12 0.000							12 0	12 0	144
6	6H10	WING	F	20					12 0.000							12 0	12 0	108
12	6H11	WING		20			V	2	4 6.000							4 6	4 6	
		INCREMENT = 17.250 IN.							11 8.000							11 8	11 8	146
12	6H12	WING		20			V	2	5 3.000							5 3	5 3	
		INCREMENT = 15.625 INCH							11 9.000							11 9	11 9	153
2	6H13	BEAM		20					17 0.000							17 0	17 0	51
3	6H50	DIAPH.		20					2 9.000							2 9	2 9	12
4	6H51	DIAPH.		20					4 10.000							4 10	4 10	29
1	5H101	STRAND BAR		20					17 0.000							17 0	17 0	18
1	5H116	STRAND BAR		20					29 0.000							29 0	29 0	30
2	6T3	WING		25					2 0.000	9 7.375	3 3.000			4 4.000	8 7.000	14 10	14 9	44
2	6T4	WING		25					2 0.000	9 11.250	3 3.000			5 0.000	8 7.000	15 2	15 1	45
48	6U1	BEAM		13	S				2 5.875	2 9.000	2 5.875	2 9.000				11 10	11 4	817
42	4U3	APP. HAUNCH		10	S					14.000	6.000					2 10	2 8	75
28	4U55	BEAM		10	S					12.000	2 5.875					4 6	4 4	81
16	6V1	WING		20			V	2	2 7.000							2 7	2 7	
		INCREMENT = 6.125 INCH							6 2.000							6 2	6 2	105
4	6V2	WING		20					6 7.000							6 7	6 7	40

COMPLETE BILL OF REINFORCING STEEL

NO. REQ'D.	MARK NO. SIZE MARK	LOCATION	EPOXY (E)	SHAPE NO.	STIRRUP (S)	SUBSTR. (X)	VARIES (V)	NO. EACH	DIMENSIONS B	C	D	E	F	H	K	NOMINAL LENGTH	ACTUAL LENGTH	WEIGHT
									FT. IN.	FT. IN.	FT. IN.	FT. IN.	FT. IN.	FT. IN.	FT. IN.	FT. IN.	FT. IN.	LBS.
46	6V3	DIAPH.	E	19	S			5	5.000	4 0.000						9 5	9 3	639
46	6V4	DIAPH.		20				5	5.000							5 5	5 5	374
16	6V5	WING		20			V	2	2 8.000							2 8	2 8	
		INCREMENT = 7.000 INCH							6 9.000							6 9	6 9	113
4	6V6	WING		20				7	2.000							7 2	7 2	43
12	6V60	BEAM	E	20				6	1.000							6 1	6 1	110
6	6V61	BEAM	E	19	S			6	1.000	4 3.000						10 4	10 2	92
5	6V62	DIAPH.	E	19	S			5	5.000	2 5.000						7 10	7 8	58
		END BENT 5																
6	6F5	DIAPH.		15					14.000	4 9.500	14.000	7.500	11.875	7.500	11.875	7 2	7 1	64
6	6F6	DIAPH.		23					14.000	2 11.000	14.000	11.875	7.500	11.875	7.500	5 3	5 2	47
5	6F7	DIAPH.		21				2	5.000	4 0.000	14.000			2 2.250	12.375	7 7	7 2	54
5	6F8	DIAPH.		23				2	5.000	7 4.500				2 2.250	12.375	9 10	9 9	73
8	7H1	BEAM		20				17	0.000							17 0	17 0	278
10	6H2	BEAM		20				32	10.000							32 10	32 10	493
3	4H3	DIAPH		20					4 11.000							4 11	4 11	10
6	4H4	DIAPH		20					34 11.000							34 11	34 11	140
1	4H5	APP. HAUNCH		20					30 0.000							30 0	30 0	20
1	4H6	APP. HAUNCH		20					14 0.000							14 0	14 0	9
6	4H7	DIAPH		20					16 9.000							16 9	16 9	67
4	6H8	BEAM		20					14 0.000							14 0	14 0	84
8	6H9	WING		20					12 0.000							12 0	12 0	144
4	6H10	WING	E	20					12 0.000							12 0	12 0	72
2	6H13	BEAM		20					17 0.000							17 0	17 0	51
12	6H14	WING		20			V	2	5 6.000							5 6	5 6	
		INCREMENT = 15.250 INCH							11 10.000							11 10	11 10	156
12	6H15	WING		20			V	2	5 0.000							5 0	5 0	
		INCREMENT = 16.250 INCH							11 9.000							11 9	11 9	151
3	6H50	DIAPH.		20					2 9.000							2 9	2 9	12
4	6H51	DIAPH.		20					4 10.000							4 10	4 10	29
1	5H101	STRAND BAR		20					17 0.000							17 0	17 0	18
1	5H116	STRAND BAR		20					29 0.000							29 0	29 0	30
2	6T1	WING		25					2 0.000	10 0.250	3 3.000			5 2.000	8 7.000	15 3	15 2	46
2	6T2	WING		25					2 0.000	9 9.250	3 3.000			4 8.000	8 7.000	15 0	14 11	45
48	6U1	BEAM		13	S				2 5.875	2 9.000	2 5.875	2 9.000				11 10	11 4	817
42	4U3	APP. HAUNCH		10	S					14.000	6.000					2 10	2 8	75
28	4U55	BEAM		10	S					12.000	2 5.875					4 6	4 4	81
46	6V3	DIAPH.	E	19	S			5	5.000	4 0.000						9 5	9 3	639
46	6V4	DIAPH.		20				5	5.000							5 5	5 5	374
16	6V7	WING		20			V	2	2 7.000							2 7	2 7	
		INCREMENT = 7.625 INCH							7 0.000							7 0	7 0	115
4	6V8	WING		20					7 6.000							7 6	7 6	45
16	6V9	WING		20			V	2	2 7.000							2 7	2 7	
		INCREMENT = 6.750 INCH							6 6.000							6 6	6 6	109
4	6V10			20					6 10.000							6 10	6 10	41

TWO ADDITIONAL #9 H10, SIEVERS ARE INCLUDED IN THE BAR BILL FOR TESTING.

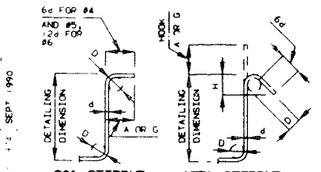

STIRRUP HOOK DIMENSIONS					
GRADES 40 - 50 - 60 KSI					
BAR SIZE	D (IN.)	90° HOOK		135° HOOK	
		HOOK A OR G		HOOK A OR G	APPROX H
#4	2"	4-1/2"		4-1/2"	3"
#5	2-1/2"	6"		5-1/2"	3-3/4"
#6	4-1/2"	12"		8"	4-1/2"

NOTE: UNLESS OTHERWISE NOTED DIAMETER "D" IS THE SAME FOR ALL BENDS AND HOOKS ON A BAR.

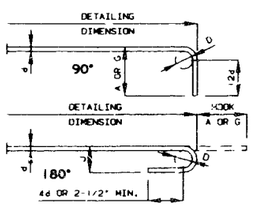

END HOOK DIMENSIONS				
BAR SIZE	D (IN.)	ALL GRADES		
		180 HOOKS		90 HOOKS
		A OR G	J	A OR G
#3	2-1/4"	5"	3"	6"
#4	3"	6"	4"	8"
#5	3-3/4"	7"	5"	10"
#6	4-1/2"	8"	6"	12"
#7	5-1/4"	10"	7"	14"
#8	6"	11"	8"	16"
#9	9-1/2"	15"	11-3/4"	19"
#10	10-3/4"	17"	13-1/4"	22"
#11	12"	19"	14-3/4"	2'-0"
#14	18-1/4"	2'-3"	21-3/4"	2'-7"

NOTE:
ALL STANDARD HOOKS AND BENDS OTHER THAN 180 DEG. TO BE BENT WITH THE SAME PROCEDURE AS FOR 90 DEG. STD. HOOKS.
HOOKS AND BENDS SHALL BE IN ACCORDANCE WITH THE PROCEDURES AS SHOWN ON THIS SHEET.
E = EPOXY COATED REINFORCEMENT.
S = STIRRUP.
X = BAR IS INCLUDED IN SUBSTRUCTURE QUANTITIES.
V = BAR DIMENSIONS VARY IN EQUAL INCREMENTS BETWEEN DIMENSIONS SHOWN ON THIS LINE AND THE FOLLOWING LINE.
NO. EA. = NUMBER OF BARS OF EACH LENGTH.
NOMINAL LENGTHS ARE BASED ON OUT TO OUT DIMENSIONS SHOWN IN BENDING DIAGRAMS AND ARE LISTED FOR FABRICATORS USE. (NEAREST INCH)
ACTL. LENGTHS ARE MEASURED ALONG CENTERLINE BAR TO THE NEAREST INCH.
PAYWEIGHTS ARE BASED ON ACTUAL LENGTHS.
FOUR ANGLE OR CHANNEL SPACERS ARE REQUIRED FOR EACH COLUMN SPIRAL. SPACERS ARE TO BE PLACED ON INSIDE OF SPIRALS. LENGTH AND WEIGHT OF COLUMN SPIRALS DO NOT INCLUDE SPLICES OR SPACERS.
REINFORCING STEEL (GRADE 60) = FY 60,000 PSI.

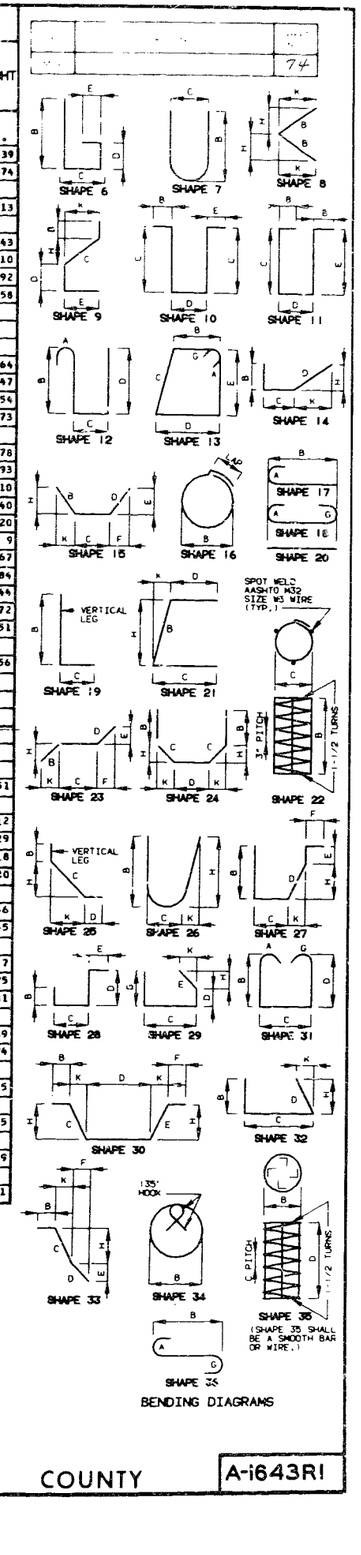

DETAILED [illegible] 1981
CHECKED [illegible] 1981

JACKSON COUNTY A-1643R1

FOR INFORMATION ONLY

A16433, Sht. 62

COMPLETE BILL OF REINFORCING STEEL

NO. REQ'D.	MARK NO. SIZE	MARK NO. MARK	LOCATION	EPOXY (E)	SHAPE NO.	STIRRUP (S)	SUBSTR. (X)	VARIES (V)	NO. EACH	DIMENSIONS B	C	D	E	F	H	K	NOMINAL LENGTH	ACTUAL LENGTH	WEIGHT
										FT. IN.	FT. IN.	FT. IN.	FT. IN.	FT. IN.	FT. IN.	FT. IN.	FT. IN.	FT. IN.	LBS.
12	6W60		BEAM	E	20					6 1.000							6 1	6 1	110
6	6W61		BEAM	E	19	S				6 1.000	4 3.000						10 4	10 2	92
5	6W62		DIAPH.	E	19	S				5 5.000	2 5.000						7 10	7 8	58
			INTERMEDIATE																
			DIAPHRAGMS																
18	5H100		STRAND BAR		20					15 6.000							15 6	15 6	291
24	5H115		INT. DIAPH.	E	20					3 5.000							3 5	3 5	86
18	5H116		STRAND BAR		20					28 0.000							28 0	28 0	540
18	5H117		INT. DIAPH		23	S				12.125	18.000				11.000	5.125	2 6	2 6	47
18	5H118		INT. DIAPH		21	S				12.125	18.000				11.000	5.125	2 6	2 3	42
12	4H119		INT. DIAPH	E	28	S					3 0.000	3 6.000	12.000				7 6	7 4	59
120	5H120		INT. DIAPH	E	10	S				12.000	3 5.000	4.000	12.000				9 2	8 9	1095
			SLAB																
252	7S1		SLAB	E	20					36 11.000							36 11	36 11	19815
54	5S2		SLAB	E	20			V	2	3 3.000							3 3	3 3	
			INCREMENT =							26 7.000							26 7	26 7	840
			10.750 INCH																
552	5S3		SLAB	E	20					27 1.000							27 1	27 1	15593
322	5S4		SLAB	E	9					15.000	12.000	5 5.000			8.000	8.000	7 8	7 7	2547
2	5S5		SLAB	E	20					4 9.000							4 9	4 9	10
2	5S6		SLAB	E	20					3 0.000							3 0	3 0	6
16	4S7		SLAB	E	20					25 3.000							25 3	25 3	270
32	4S8		SLAB	E	20					38 4.000							38 4	38 4	819
18	4S9		SLAB	E	20					23 10.000							23 10	23 10	387
2	5S10		SLAB	E	9					15.000	12.000	6 0.000			8.000	8.000	8 3	8 2	17
130	7S11		SLAB	E	20					26 6.000							26 6	26 6	7092
67	7S12		SLAB	E	20					27 0.000							27 0	27 0	3698
485	6S13		SLAB	E	20					16 11.000							16 11	16 11	12523
			RAISED																
			MEDIAN																
			BARRIER																
261																			
8	4M2		MEDIAN	E	20					22 0.000							22 0	22 0	118
24	4M3		MEDIAN	E	20					24 9.000							24 9	24 9	397
2	4M4		MEDIAN	E	20					3 10.000							3 10	3 10	5
8	4M5		MEDIAN	E	20					28 5.000							28 5	28 5	152
2	4M6		MEDIAN	E	16					2 4.000							8 2	8 2	11
2	4M9		MEDIAN	E	20					4 1.000							4 1	4 1	5
16	4M10		MEDIAN	E	23					2 3.375	4 2.000				2 2.750	5.625	6 5	6 5	69
			16 INCH																
			BARRIER CURB																
304	5R1		BARRIER CURB	E	19	S				2 6.000	3.500						2 10	2 8	846
276	5R2		BARRIER CURB	E	15	S				2 6.125	3.500				2 6.000	3.000	2 10	2 9	792
246	5R3		BARRIER CURB	E	19	S				17.000	6.000						23	22	470
246	5R4		BARRIER CURB	E	27	S					6.000	11.125	6.000	12.000	9.125	6.375	2 11	2 9	704
34	5R5		BARRIER CURB	E	19	S				2 2.500	6.000						2 9	2 7	92
4	5R7		BARRIER CURB	E	27	S					6.000	7.875	17.750		6.250	4.750	2 8	2 7	11
12	5R8		BARRIER CURB	E	10	S					2 0.000	7.500					4 8	4 5	55
24	5R9		BARRIER CURB	E	20					5 0.000							5 0	5 0	125

COMPLETE BILL OF REINFORCING STEEL

NO. REQ'D.	MARK NO. SIZE	MARK NO. MARK	LOCATION	EPOXY (E)	SHAPE NO.	STIRRUP (S)	SUBSTR. (X)	VARIES (V)	NO. EACH	DIMENSIONS B	C	D	E	F	H	K	NOMINAL LENGTH	ACTUAL LENGTH	WEIGHT
										FT. IN.	FT. IN.	FT. IN.	FT. IN.	FT. IN.	FT. IN.	FT. IN.	FT. IN.	FT. IN.	LBS.
10	5R10		BARRIER CURB	E	20					10 5.000							10 5	10 5	109
2	5R11		BARRIER CURB	E	20					11 6.000							11 6	11 6	24
38	5R12		BARRIER CURB	E	20					9 9.000							9 9	9 9	386
6	5R13		BARRIER CURB	E	20					32 11.000							32 11	32 11	206
24	5R14		BARRIER CURB	E	20					28 3.000							28 3	28 3	707
6	5R15		BARRIER CURB	E	20					32 11.000							32 11	32 11	206
4	5R19		BARRIER CURB	E	19	S				2 2.750	3.500						2 6	2 5	10
30	5R20		BARRIER CURB	E	27	S					6.000	10.625	17.750		8.750	6.125	2 10	2 10	89
			20 INCH																
			BARRIER CURB																
36	5R12		BARRIER CURB	E	20					9 9.000							9 9	9 9	386
24	5R14		BARRIER CURB	E	20					28 3.000							28 3	28 3	707
255	5R21		BARRIER CURB	E	19	S				2 6.000	7.000						3 1	3 0	798
255	5R22		BARRIER CURB	E	19	S				2 6.125	7.000				2 6.000	3.000	3 1	3 0	798
271	5R23		BARRIER CURB	E	19	S				17.000	10.000						2 3	2 2	612
255	5R24		BARRIER CURB	E	27	S					10.000	11.125	8.000	12.000	9.125	6.375	3 5	3 3	864
4	5R25		BARRIER CURB	E	20					33 1.000							33 1	33 1	138
4	5R26		BARRIER CURB	E	20					32 1.000							32 1	32 1	134
1	5R27		BARRIER CURB	E	20					34 5.000							34 5	34 5	36
1	5R28		BARRIER CURB	E	17					33 9.000							34 4	34 4	36
1	5R29		BARRIER CURB	E	17					34 7.000							35 2	35 2	37
1	5R30		BARRIER CURB	E	20					33 7.000							33 7	33 7	35
40	5R31		BARRIER CURB	E	19	S				3 0.000	7.000						3 7	3 6	146
32	5R32		BARRIER CURB	E	19	S		V	4	2 0.000	7.000						2 7	2 6	
			INCREMENT =							2 10.000	7.000						3 5	3 4	97
			1.375 INCH																
24	5R33		BARRIER CURB	E	20					5 0.000							5 0	5 0	125
4	5R34		BARRIER CURB	E	23					7 2.000	11.000				2 2.000	6 10.000	8 1	8 1	34
12	5R35		BARRIER CURB	E	28	S					12.000	14.000	10.000				3 0	2 10	35
4	5R36		BARRIER CURB	E	27	S					10.000	7.875	8.000	12.000	6.250	4.750	3 2	3 0	13
4	5R40		BARRIER CURB	E	20					3 6.000							3 6	3 6	15
			END OF LIST																

TWO ADDITIONAL SHAPE 31 STIRRUPS ARE INCLUDED IN THE BAR BILL FOR TESTING.

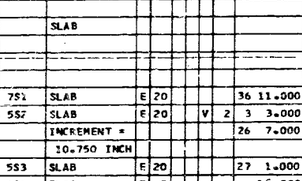

90° STIRRUP 135° STIRRUP

STIRRUP HOOK DIMENSIONS					
GRADES 40 - 50 - 60 KSI					
BAR SIZE	D (IN.)	90° HOOK		135° HOOK	
		HOOK A OR G		HOOK A OR G	APPROX. H
#4	2"	4-1/2"		4-1/2"	3"
#5	2-1/2"	6"		5-1/2"	3-3/4"
#6	4-1/2"	12"		8"	5-1/2"

NOTE: UNLESS OTHERWISE NOTED DIAMETER "D" IS THE SAME FOR ALL BENDS AND HOOKS ON A BAR.

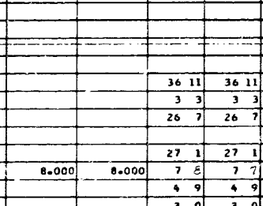

END HOOK DIMENSIONS				
BAR SIZE	D (IN.)	ALL GRADES		
		180 HOOKS		90 HOOKS
		A OR G	J	A OR G
#3	2-1/4"	5"	3"	6"
#4	3"	6"	4"	8"
#5	3-3/4"	7"	5"	10"
#6	4-1/2"	8"	6"	12"
#7	5-1/4"	10"	7"	14"
#8	6"	11"	8"	16"
#9	9-1/2"	15"	11-3/4"	19"
#10	10-3/4"	17"	13-1/4"	22"
#11	12"	19"	14-3/4"	2'-0"
#14	18-1/4"	2'-3"	21-3/4"	2'-7"

NOTE:
ALL STANDARD HOOKS AND BENDS OTHER THAN 180 DEG. TO BE BENT WITH THE SAME PROCEDURE AS FOR 90 DEG. STD. HOOKS.
HOOKS AND BENDS SHALL BE IN ACCORDANCE WITH THE PROCEDURES AS SHOWN ON THIS SHEET.
E = EPOXY COATED REINFORCEMENT.
S = STIRRUP.
X = BAR IS INCLUDED IN SUBSTRUCTURE QUANTITIES.
V = BAR DIMENSIONS VARY IN EQUAL INCREMENTS BETWEEN DIMENSIONS SHOWN ON THIS LINE AND THE FOLLOWING LINE.
NO. EA. = NUMBER OF BARS OF EACH LENGTH.
NOMINAL LENGTHS ARE BASED ON OUT TO OUT DIMENSIONS SHOWN IN BENDING DIAGRAMS AND ARE LISTED FOR FABRICATORS USE. (NEAREST INCH)
ACTUAL LENGTHS ARE MEASURED ALONG CENTERLINE BAR TO THE NEAREST INCH.
PAYWEIGHTS ARE BASED ON ACTUAL LENGTHS.
FOUR ANGLE OR CHANNEL SPACERS ARE REQUIRED FOR EACH COLUMN SPIRAL. SPACERS ARE TO BE PLACED ON INSIDE OF SPIRALS. LENGTH AND WEIGHT OF COLUMN SPIRALS DO NOT INCLUDE SPLICES OR SPACERS.
REINFORCING STEEL (GRADE 60) = FY 60,000 PSI.

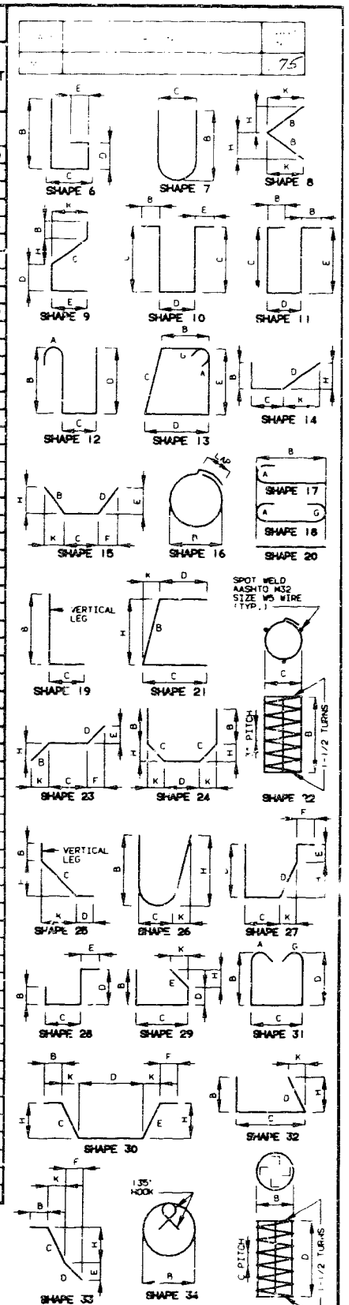

BENDING DIAGRAMS

DETAILED Mar. 1981
CHECKED Mar. 1981

JACKSON COUNTY

A-1643RI

MISSOURI HIGHWAY AND TRANSPORTATION COMMISSION

STATE	PROJ. NO.	SHEET NO.
MO.	FA.-435-1(246)	50
SEC./SUR. 26 TWP. 48N RGE. 33W		

NOTE: CONTRACTOR SHALL EXERCISE CAUTION WHEN WORKING NEAR CONDUIT AT NORTH END OF END BENT NO. 1.

U.I.P. EXIST. (45',75',75',45') CONT. BOX GDR. SPANS
WIDEN ON RIGHT AND LEFT WITH (44.75',75.25',75.25',44.75') P/S CONC. BOX GDR. SPANS

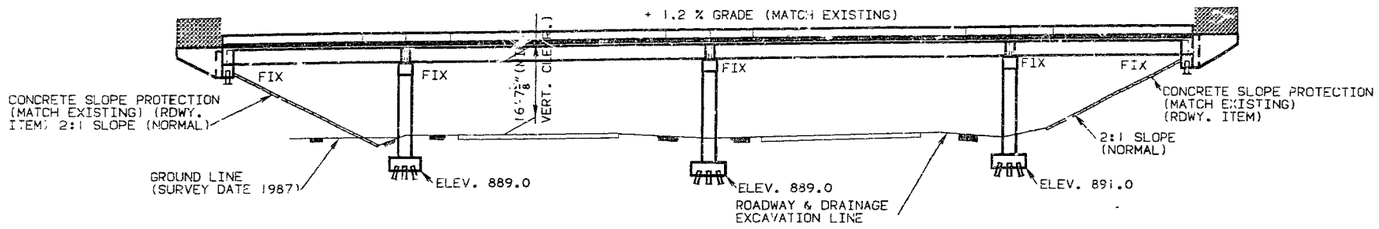

GENERAL ELEVATION

NOTE: ROADWAY FILL SHALL BE COMPLETED TO THE FINAL ROADWAY SECTION AND UP TO THE ELEVATION OF THE BOTTOM OF THE CONCRETE BEAM WITHIN THE LIMITS OF THE STRUCTURE AND FOR NOT LESS THAN 25' IN BACK OF THE FILL FACE OF THE END BENTS BEFORE PILES ARE DRIVEN FOR ANY BENTS FALLING WITHIN THE EMBANKMENT SECTION.

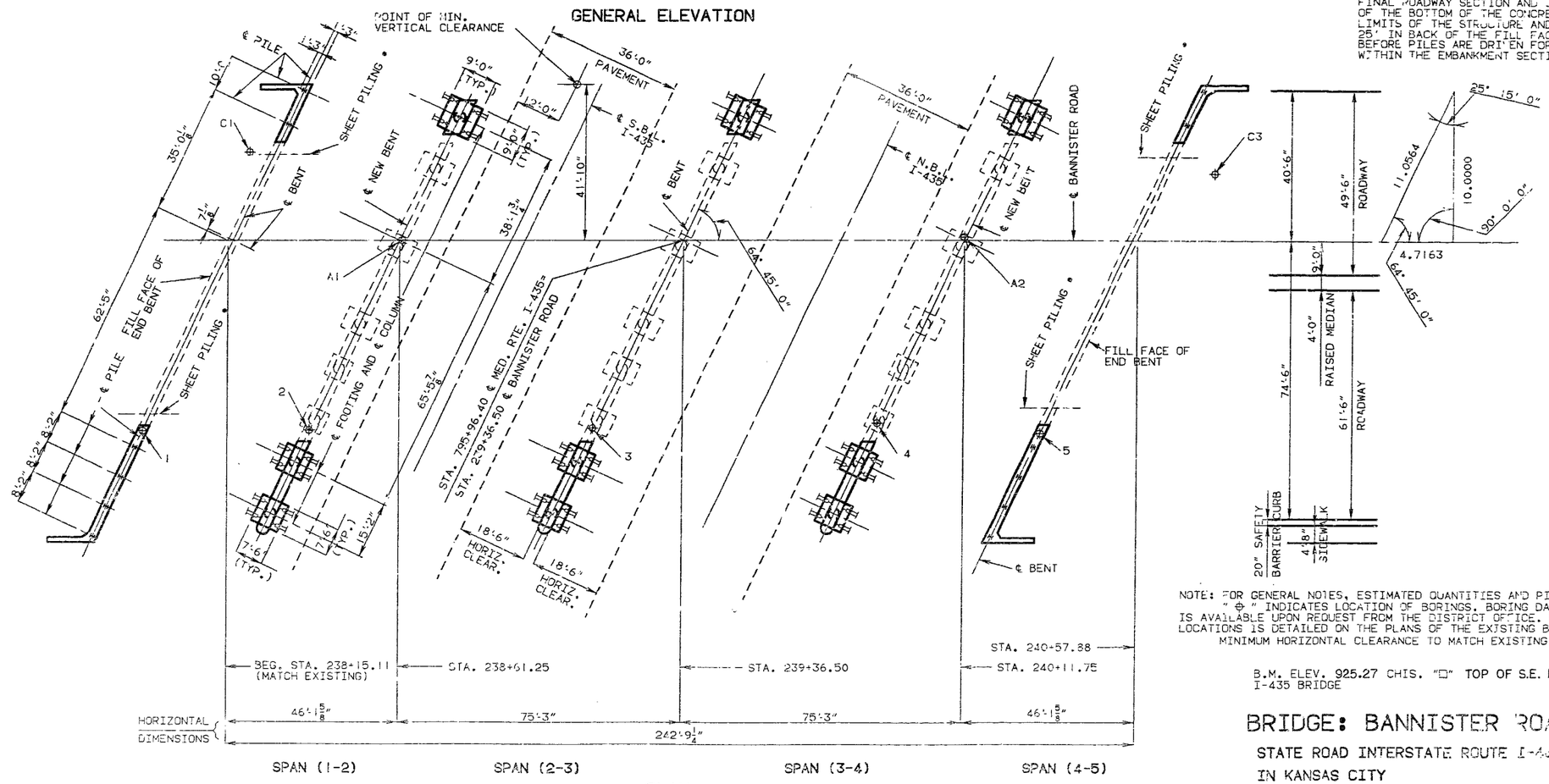

PLAN

NOTE: FOR GENERAL NOTES, ESTIMATED QUANTITIES AND PILE DATA SEE SHT. 3.
" ⊕ " INDICATES LOCATION OF BORINGS. BORING DATA FOR ALL LOCATIONS IS AVAILABLE UPON REQUEST FROM THE DISTRICT OFFICE. BORING DATA FOR NUMBERED LOCATIONS IS DETAILED ON THE PLANS OF THE EXISTING BRIDGE.
MINIMUM HORIZONTAL CLEARANCE TO MATCH EXISTING.

B.M. ELEV. 925.27 CHIS. "□" TOP OF S.E. ENDPOST I-435 BRIDGE

NOTE: '•' PROVIDE SHEET PILING FOR GRADE DIFFERENTIAL OF FILL NEAR END BENTS. (SEE SPECIAL PROVISION) (TYP.)

BRIDGE: BANNISTER ROAD UNDERPASS

STATE ROAD INTERSTATE ROUTE I-435
IN KANSAS CITY
PROJECT NO. FA-435-1(246) STA. 795+96.40
JOB NO. 4I-806-435 RTE. I-435
JACKSON COUNTY
DATE 4/22/91

STD. 902.30
STD. 909.40
STD. 606.22
STD. 617.00
STD. 611.60
STD. 706.35
A-1343R1

DESIGNED JAN. 1991
DETAILED JAN. 1991
CHECKED JAN. 1991

NOTE: THIS DRAWING IS NOT TO SCALE. FOLLOW DIMENSIONS.

SHEET NO. 1A OF 26

STATE	PROJ. NO.	SHEET NO.
MO.	F.A.-435-1(246)	1/52

ESTIMATED QUANTITIES

ITEM		SUBSTR.	SUPERSTR	TOTAL
REMOVAL & STORAGE OF EXIST. BRIDGE RAIL	LIN. FT.		226	226
CURB REMOVAL (BRIDGES)	LIN. FT.		747	747
PARTIAL REMOVAL OF SUBSTR. CONC.	LUMP SUM			1
PARTIAL REMOVAL OF EXIST. BRIDGE DECK	SQ. FT.		1184	1184
CLASS I EXCAVATION	CU. YD.	294.5		294.5
SHEET PILING	LUMP SUM			1
(72") PEDESTRIAN FENCE (STRUCTURES)	LIN. FT.		263	263
STRUCTURAL STEEL PILES (10")	LIN. FT.	432		432
STRUCTURAL STEEL PILES (12")	LIN. FT.	738		738
CLASS B CONCRETE (SUBSTR.)	CU. YD.	190.1		190.1
SUBSTR. REPAIR (UNFORMED)	SQ. FT.	0		0
SUPSTR. REPAIR (UNFORMED)	SQ. FT.		0	0
CLASS B2 CONCRETE (SUPSTR) CONC ON BOX GDR	CU. YD.		295.6	295.6
36" SAFETY BARRIER CURB	LIN. FT.		264	264
20" SAFETY BARRIER CURB	LIN. FT.		242	242
RAISED MEDIAN BARRIER	SQ. FT.		971	971
SIDEWALK (BRIDGES)	SQ. FT.		1133	1133
PLAIN NEOPRENE BEARING PADS	EACH		18	18
LAMINATED NEOPRENE BEARING PADS	EACH		54	54
P/S CONC. BOX GDR. (45' SPAN)	EACH		18	18
P/S CONC. BOX GDR. (75' SPAN)	EACH		18	18
REINFORCING STEEL (BRIDGES)	POUND	25740	8260	34000
CONDUIT SYSTEM ON STRUCTURE	LUMP SUM			1
REINFORCING STEEL (EPOXY COATED)	POUND		65690	65690
BRIDGE RAIL RELOCATED	LUMP SUM			1

NOTE: ALL CONCRETE ABOVE LOWER CONSTRUCTION JOINT IN END BENTS IS INCLUDED WITH SUPERSTRUCTURE QUANTITIES.

ALL REINFORCEMENT IN THE END BENTS IS INCLUDED WITH SUPERSTRUCTURE QUANTITIES.

THE COST OF FURNISHING, FABRICATING AND INSTALLING NEOPRENE BEARING PADS, COMPLETE-IN-PLACE, WILL BE PAID FOR AT THE CONTRACT UNIT PRICE FOR PLAIN AND LAMINATED NEOPRENE BEARING PADS PER EACH.

ALL CONCRETE AND REINFORCING STEEL IN THE SIDEWALK ARE INCLUDED IN THE SUPERSTRUCTURE QUANTITIES FOR SIDEWALKS.

ALL CONCRETE AND REINFORCING STEEL IN THE RAISED MEDIAN BARRIER ARE INCLUDED IN THE SUPERSTRUCTURE QUANTITIES FOR RAISED MEDIAN BARRIER.

COST OF FURNISHING AND INSTALLING RESIN ANCHOR SYSTEMS, COMPLETE IN PLACE, SHALL BE INCLUDED IN THE UNIT PRICE BID FOR CONCRETE.

PILE DATA

BENT NUMBER	1 LT.	1 RT.	2 LT.	2 RT.	3 LT.	3 RT.	4 LT.	4 RT.	5 LT.	5 RT.
PILE TYPE AND SIZE	HP10X42	HP10X42	HP12X53	HP12X53	HP12X53	HP12X53	HP12X53	HP12X53	HP10X42	HP10X42
NUMBER	2	4	5	8	6	10	5	8	2	4
APPROXIMATE LENGTH (FT.)	31	34	17	17	17	17	19	19	36	42
DESIGN BEARING (TONS)	52	52	60	69	61	64	60	69	52	52
HAMMER ENERGY REQ'D. (FT/LBS)	11500	11500	14100	16200	14400	16400	14100	16200	11500	11500

MINIMUM ENERGY REQUIREMENT OF HAMMER BASED ON PLAN LENGTH AND DESIGN BEARING VALUE OF PILES.
ALL PILE SHALL BE DRIVEN TO PRACTICAL REFUSAL.

GENERAL NOTES:

DESIGN SPECIFICATIONS: A.A.S.H.T.O.-1989 LOAD FACTOR DESIGN,
A.A.S.H.T.O.-1983 GUIDE SPECIFICATIONS FOR SEISMIC DESIGN PERFORMANCE CATEGORY A

DESIGN LOADING:

HS20-44 35# FUTURE WEARING SURFACE
MODIFIED 24,000# TANDEM AXLE
EARTH 120#/CU. FT., EQUIVALENT FLUID PRESSURE 45#/CU. FT.

SUPERSTRUCTURE: SIMPLY-SUPPORTED, NON-COMPOSITE FOR DEAD LOAD.
CONTINUOUS COMPOSITE FOR LIVE LOAD.

DESIGN UNIT STRESSES:

CLASS B CONCRETE (SUBSTRUCTURE) F'C=3,000 PSI

CLASS B2 CONCRETE (SUPERSTRUCTURE, EXCEPT PRESTRESSED GDRS., RAISED MEDIAN BARRIER AND SAFETY BARRIER CURB) F'C=4,000 PSI

CLASS B1 CONCRETE (SAFETY BARRIER CURB & RAISED MEDIAN BARRIER) F'C=4,000 PSI

REINFORCING STEEL (GRADE 60) FY=60,000 PSI

STEEL PILE FB=9,000 PSI

FOR PRESTRESSED GIRDER STRESSES, SEE SHT. 13 & 14.

NEOPRENE BEARING PADS: BEARINGS SHALL BE 60 DUROMETER NEOPRENE PADS.

JOINT FILLER: ALL JOINT FILLER SHALL MEET THE REQUIREMENTS OF STD. SPEC. 1057.2.4, EXCEPT AS NOTED.

REINFORCING STEEL: MINIMUM CLEARANCE TO REINFORCING STEEL SHALL BE 1 1/2", UNLESS OTHERWISE SHOWN.

BARS BONDED IN OLD CONCRETE NOT REMOVED SHALL BE CLEANLY STRIPPED AND EMBEDDED INTO NEW CONCRETE WHERE POSSIBLE. IF LENGTH IS AVAILABLE, OLD BARS SHALL EXTEND INTO NEW CONCRETE AT LEAST 30 DIAMETERS FOR DEFORMED BARS, UNLESS OTHERWISE NOTED.

CONSTRUCTION CLEARANCE: A MINIMUM VERTICAL CLEARANCE OF 15'-0" FROM CROWN OF EXISTING LANES AND A MINIMUM LATERAL CLEARANCE OF 40'-0" CENTERED ON EXISTING LANES SHALL BE MAINTAINED DURING CONSTRUCTION.

TRAFFIC MAINTAINED: TRAFFIC OVER STRUCTURE TO BE MAINTAINED DURING CONSTRUCTION. (SEE ROADWAY PLANS)

EXISTING STRUCTURE: OUTLINE OF OLD WORK IS INDICATED BY LIGHT DASHED LINES. HEAVY LINES INDICATE NEW WORK.

CONTRACTOR SHALL VERIFY ALL DIMENSIONS IN FIELD BEFORE ORDERING NEW MATERIALS.

RESIN ANCHOR SYSTEMS: THE CONTRACTOR SHALL USE ONE OF THE ANCHOR SYSTEMS LISTED IN THE SPECIAL PROVISIONS. THESE ANCHOR SYSTEMS SHALL BE INSTALLED ACCORDING TO THE MANUFACTURER'S SPECIFICATIONS EXCEPT AS MODIFIED BY THE JOB SPECIAL PROVISIONS AND THAT A PLAIN, #6, GRADE 60 REINFORCING BAR 2'-6" LONG SHALL BE SUBSTITUTED FOR THE THREADED ROD STUD. AN EPOXY COATED #4, GRADE 60, REINFORCING BAR 23" LONG SHALL BE SUBSTITUTED FOR THE THREADED ROD STUD IN THE RAISED MEDIAN BARRIER.

120

F.A.-435-1(246)

NOTE: CONCRETE FOR PRESTRESSED GIRDERS SHALL BE CLASS A1 WITH F'C = 5000 PSI

(+) INDICATES PRESTRESSING STRANDS.

USE 30 STRANDS WITH AN INITIAL FORCE OF 930 KIPS.

PRESTRESSING STRANDS SHALL BE [illegible] WIRE LOW RELAXATION STRANDS, $\frac{1}{2}$" DIAMETER CONFORMING TO A.A.S.H.T.O. M203, GRADE 270. SEE SEC. 705.4.8.

MINIMUM CLEARANCE TO REINFORCING STEEL SHALL BE $1\frac{1}{2}$" UNLESS OTHERWISE NOTED.

FOR PART SECTION NEAR 1"Ø TIE ROD AND PART ELEVATION OF INT. DIAPH. UNITS SEE SHT. 16.

FOR COMPLETE BILL OF REINFORCING STEEL SEE SHT. 15.

FOR STRAND DETAILS AT GIRDER ENDS, TYPICAL SECTION THRU BOX GIRDER & PART PLAN OF INT. DIAPH. SHOWING TIE ROD LOCATION, SEE SHT. 16.

FOR FIELD BENDING OF #4B3 SEE SHT. 16.

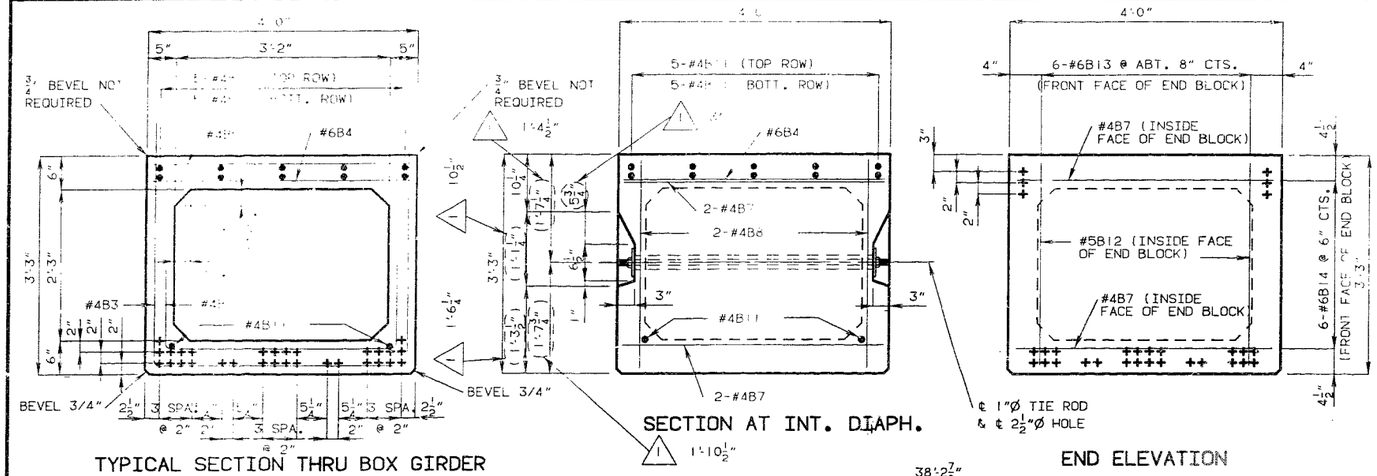

TYPICAL SECTION THRU BOX GIRDER

SECTION AT INT. DIAPH.

END ELEVATION

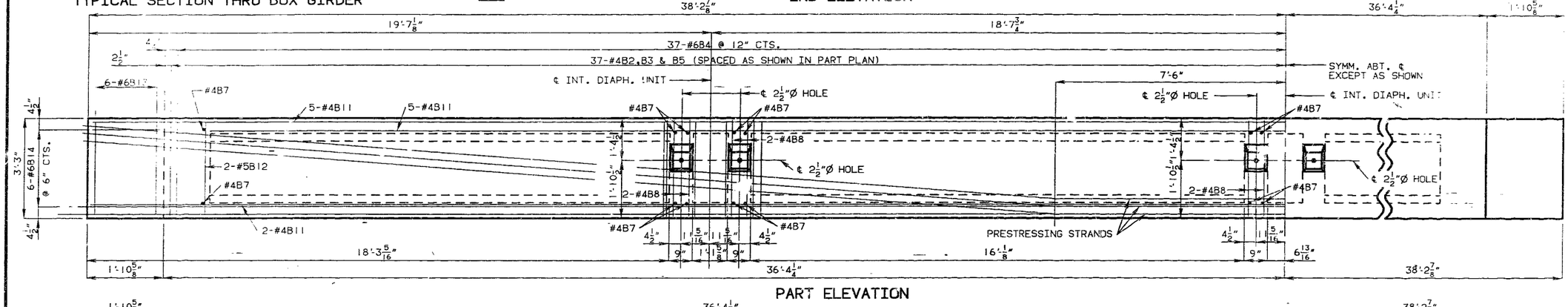

PART ELEVATION

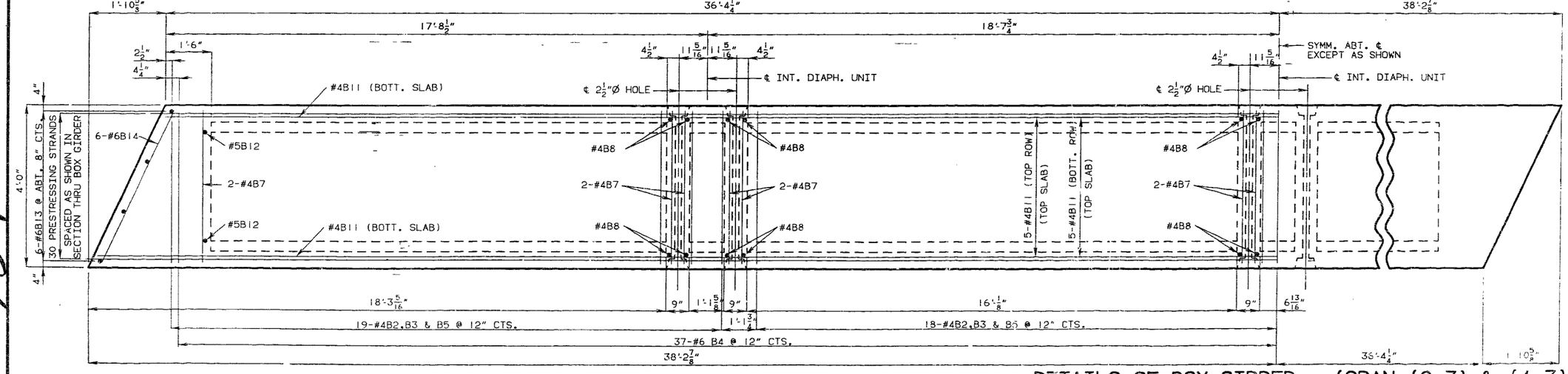

PART PLAN

DETAILED DEC. 1990
CHECKED FEB. 1991

NOTE: THIS DRAWING IS NOT TO SCALE. FOLLOW DIMENSIONS.

DETAILS OF BOX GIRDER - (SPAN (2-3) & (4-3)

SHEET NO. 14A OF 26

1 REVISED 7-22-91

JACKSON COUNTY A-1643R1

121

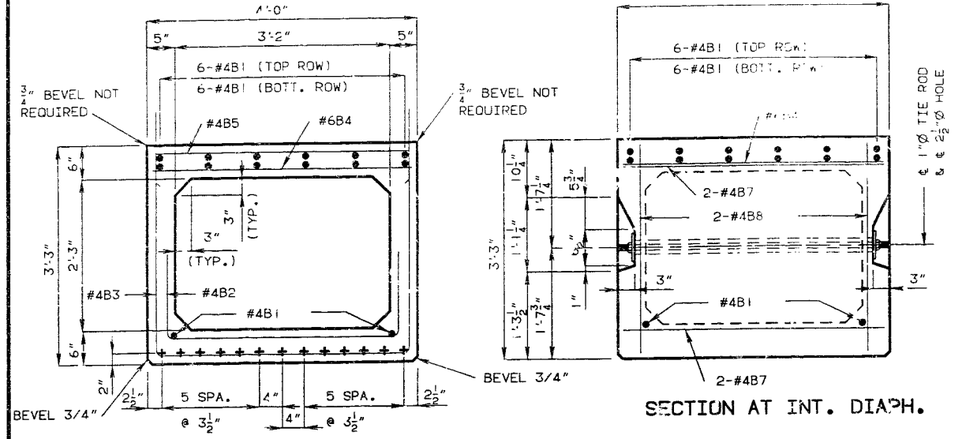

TYPICAL SECTION THRU BOX GIRDER

SECTION AT INT. DIAPH.

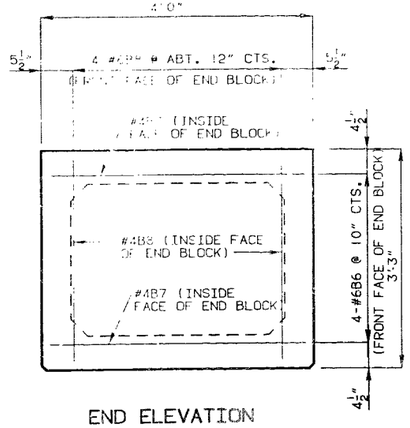

END ELEVATION

NOTE: CONCRETE FOR PRESTRESSED GIRDERS SHALL BE CLASS A1 WITH F'C = 5000 PSI

(+) INDICATES PRESTRESSING STRANDS.

USE 13 STRANDS WITH AN INITIAL PRESTRESS FORCE OF 405 KIPS.

PRESTRESSING STRANDS SHALL BE UNCOATED SEVEN WIRE LOW RELAXATION STRANDS, 1/2" DIAMETER CONFORMING TO A.A.S.H.T.O. M203. GRADE 270. SEE SEC. 705.4.8.

MINIMUM CLEARANCE TO REINFORCING STEEL SHALL BE 1 1/2" UNLESS OTHERWISE NOTED.

FOR FIELD BENDING OF #4B3 SEE SHT. 16.

STATE	PROJ. NO.	SHT. NO.
MO.	FA-435-1(246)	

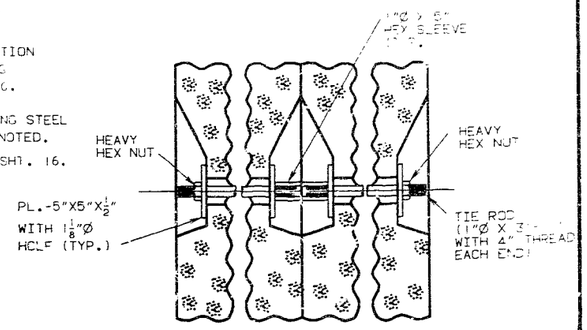

EXTERIOR GIRDER INTERIOR GIRDER

PART SECTION NEAR 1"Ø TIE ROD

NOTE: COST OF FURNISHING 1"Ø TIE ROD ASSEMBLIES IS INCLUDED IN PRICE BID FOR OTHER ITEMS.
1"Ø TIE RODS, SLEEVES, PLATES AND NUTS SHALL BE GALVANIZED.
1"Ø TIE RODS, SLEEVES AND NUTS SHALL BE A-307.
PLATES SHALL BE A-36.

FOR COMPLETE BILL OF REINFORCING STEEL SEE SHT. 15.

FOR STRAND DETAILS AT GIRDER ENDS, TYPICAL SECTION THRU BOX GIRDER & PART PLAN OF INT. DIAPH. SHOWING TIE ROD LOCATION SEE SHT. 16.

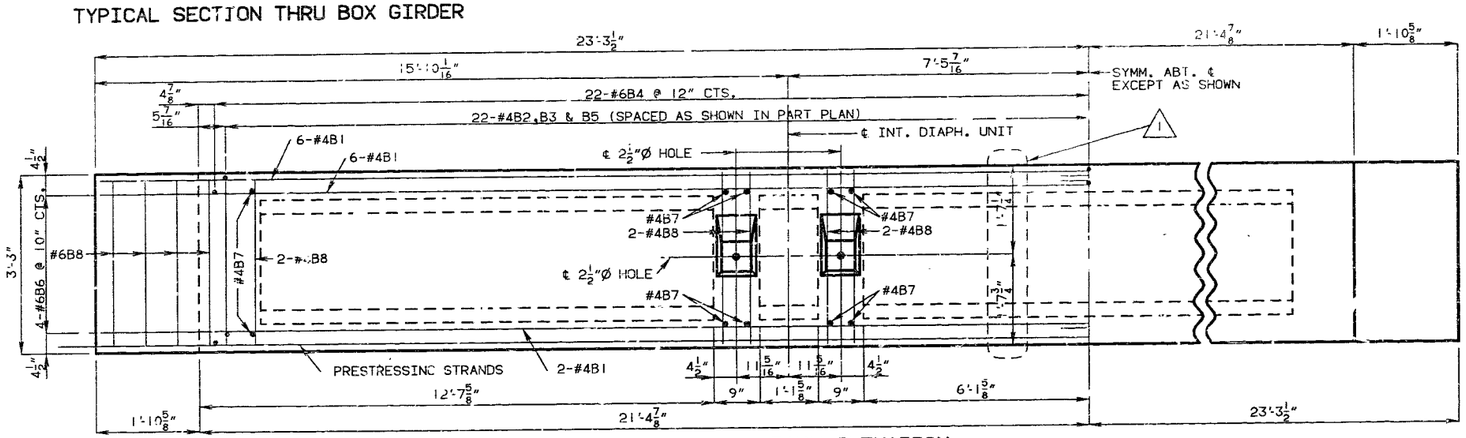

PART ELEVATION

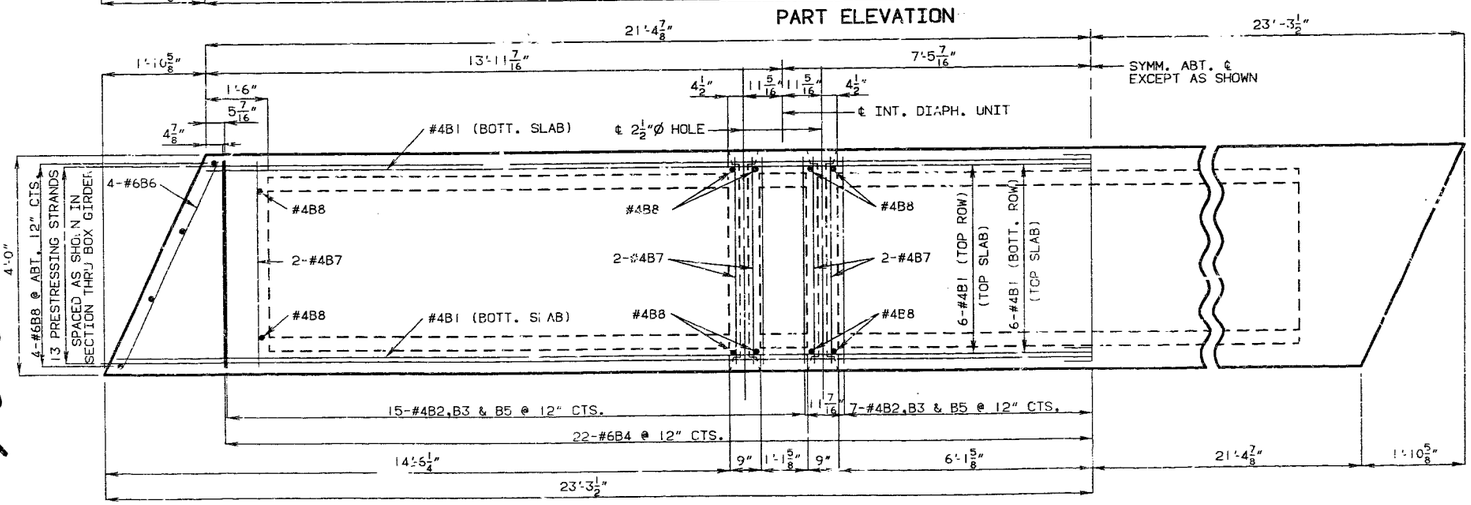

PART PLAN

NOTE: THIS DRAWING IS NOT TO SCALE. FOLLOW DIMENSIONS.

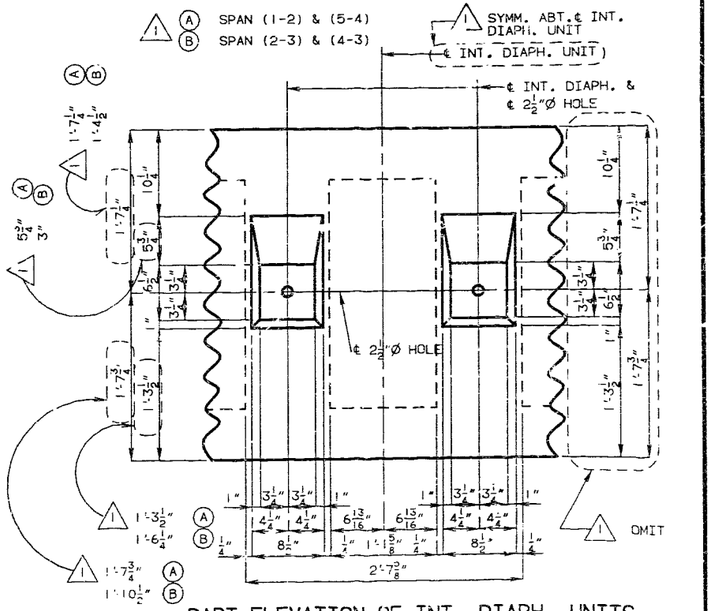

PART ELEVATION OF INT. DIAPH. UNITS

DETAILS OF BOX GIRDER SPAN (1-2)&(5-4)

DETAILED DEC. 1990
CHECKED FEB. 1991

SHEET NO. 13A OF 26

1 REVISED 7-22-91

JACKSON COUNTY A-1643R1